NSTALL WATER TANK

TOWN OF WALLKILL REST AREA
MIDDLETOWN, NY
OGS PROJECT NUMBER J1405

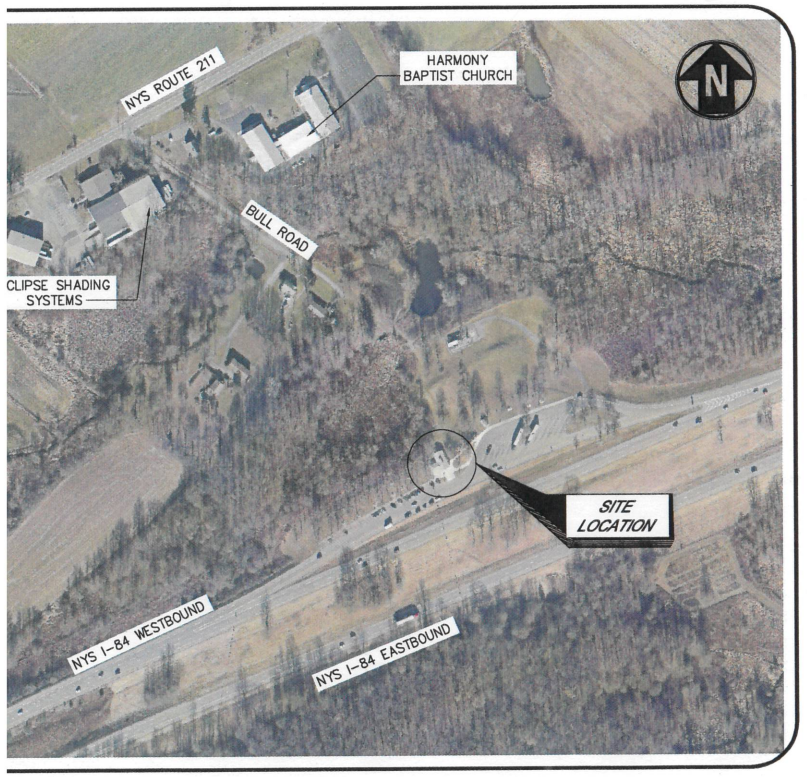

NEW YORK STATE OF OPPORTUNITY. Department of Transportation

NEW YORK STATE OF OPPORTUNITY. Office of General Services

DESIGN & CONSTRUCTION

DRAWING LIST

G-001	TITLE SHEET	INCLUDED FOR OCDOH REVIEW
G-002	LEGEND & GENERAL NOTES	
C-101	PROCESS & INSTRUMENTATION DIAGRAM	
C-102	SITE PLAN	
C-103	BUILDING PIPING PLAN	
C-601	CIVIL, TANK, & PIPING PLAN	
S-001	NOTES, LEGENDS AND ABBREVIATIONS	NOT INCLUDED FOR OCDOH REVIEW NOT INCLUDED IN THIS DRAWING SET
S-002	TRUSS LOADING DIAGRAMS	
S-101	FOUNDATION PLAN	
S-102	ROOF FRAMING PLAN	
S-501	SECTIONS	
S-701	TYPICAL SECTIONS AND DETAILS	
S-702	TYPICAL SECTIONS AND DETAILS	
A-001	CODE COMPLIANCE	
A-101	FLOOR PLANS AND SECTIONS	
A-102	EXTERIOR DETAILS	
E-001	ELECTRICAL SPECIFICATIONS	
E-101	ELECTRICAL PLAN & DETAILS	
M-001	MECHANICAL LEGENDS AND ABBREVIATIONS	
M-101	MECHANICAL PLAN	

SCOPE NARRATIVE FOR DEPARTMENT OF HEALTH REVIEW:

PROJECT INVOLVES THE REPLACEMENT OF A FAILED, BURIED, HYDROPNEUMATIC PRESSURE TANK WITH A NEW 2,000 GALLON ABOVEGROUND CHLORINE CONTACT TANK. CHLORINE CONTACT TANK WILL BE ATMOSPHERIC. PROJECT ALSO INVOLVES MODIFICATIONS OF THE WATER SYSTEM TO INCLUDE NEW VARIABLE SPEED BOOSTER PUMPS, CHLORINE FEED SYSTEM, FLOW METER, AND ASSOCIATED PIPING, FITTINGS, VALVES, AND APPURTENANCES.

ORANGE COUNTY
DEPARTMENT OF HEALTH

REGULATORY APPROVAL SET
11/05/2020

DRAWING NUMBER: G-001

SHEET 1 OF 20

GENERAL NOTES:

1. THE BASEMAPS WERE PREPARED USING SITE PHOTOS AND AERIAL IMAGERY. SUBSURFACE STRUCTURES, ABOVE GROUND STRUCTURES AND/OR UTILITIES THAT ARE SHOWN ARE APPROXIMATE. THE EXACT LOCATIONS MAY VARY FROM THE LOCATIONS INDICATED. IN PARTICULAR, THE CONTRACTOR IS WARNED THAT THE EXACT OR EVEN APPROXIMATE LOCATION OF SUCH PIPELINES, SUBSURFACE STRUCTURES AND/OR UTILITIES IN THE AREA MAY BE DIFFERENT FROM THAT SHOWN OR MAY NOT BE SHOWN, AND IT SHALL BE THEIR RESPONSIBILITY TO PROCEED WITH GREAT CARE IN EXECUTING ANY WORK. 48 HOURS BEFORE YOU DIG CALL DIG SAFELY NY AT 811 OR 1-(800)-962-7962 TOLL FREE.
2. THE CONTRACTOR SHALL VERIFY ALL CONDITIONS IN THE FIELD PRIOR TO COMMENCEMENT OF THE WORK. THE ENGINEER SHALL BE NOTIFIED IN WRITING OF ANY CONDITIONS THAT VARY FROM THOSE SHOWN ON THE PLANS. THE CONTRACTOR'S WORK SHALL NOT VARY FROM THE PLANS WITHOUT THE EXPRESSED APPROVAL OF THE ENGINEER.
3. THE CONTRACTOR SHALL BE RESPONSIBLE TO CONDUCT EXPLORATORY TEST PITS AS REQUIRED TO DETERMINE UNDERGROUND CONDITIONS.
4. THE CONTRACTOR SHALL BE RESPONSIBLE FOR OBTAINING AND INCURRING THE COST OF ALL REQUIRED PERMITS, INSPECTIONS, CERTIFICATES, ETC. AND SHALL COMPLY WITH ALL REQUIRED PERMITS.
5. ALL WORK SHALL BE DONE IN STRICT COMPLIANCE WITH ALL APPLICABLE NATIONAL, STATE, AND LOCAL CODES, STANDARDS, ORDINANCES, RULES, AND REGULATIONS.
5. THE CONTRACTOR SHALL PROVIDE AND INSTALL ALL MATERIALS AND PERFORM ALL WORK IN ACCORDANCE WITH RECOGNIZED GOOD STANDARD PRACTICE.
7. THE ENGINEER RESERVES THE RIGHT TO EXAMINE ANY WORK DONE ON THIS PROJECT AT ANY TIME TO DETERMINE THE CONFORMANCE WITH THE REQUIREMENTS OF THE CONTRACT DOCUMENTS OF THIS PROJECT, AS INTENDED AND INTERPRETED BY THE ENGINEER.
3. THE CONTRACTOR SHALL HOLD THE OWNER HARMLESS AGAINST ANY AND ALL CLAIMS ARISING FROM WORK DONE BY THE CONTRACTOR ON THE SITE.
9. MISCELLANEOUS WORK NOT SPECIFICALLY SHOWN ON THE CONTRACT DRAWINGS SUCH AS PATCHING, BLOCKING, TRIMMING, ETC., SHALL BE PERFORMED AS REQUIRED TO MAKE THE WORK COMPLETE.
10. THE CONTRACTOR SHALL PROTECT EXISTING PROPERTY LINE MONUMENTATION. ANY MONUMENTATION DISTURBED OR DESTROYED, AS JUDGED BY THE ENGINEER OR OWNER, SHALL BE REPLACED AT THE CONTRACTOR'S EXPENSE UNDER THE SUPERVISION OF A NEW YORK STATE LICENSED LAND SURVEYOR.
11. ALL CONSTRUCTION STAKEOUT SHALL BE THE RESPONSIBILITY OF THE CONTRACTOR.
12. ALL TRENCH EXCAVATION AND ANY REQUIRED SHEETING AND SHORING SHALL BE DONE IN ACCORDANCE WITH THE LATEST REVISIONS OF NEW YORK STATE INDUSTRIAL CODE RULE 23 AND OSHA REGULATIONS FOR CONSTRUCTION. SHEET PILING SHALL BE DESIGNED AND SEALED BY A NEW YORK STATE PROFESSIONAL ENGINEER.
13. CONTRACTOR SHALL BE RESPONSIBLE FOR DEWATERING AND THE MAINTENANCE OF SURFACE DRAINAGE DURING THE COURSE OF WORK. CONTRACTOR SHALL MAINTAIN EXISTING SITE DRAINAGE PATTERNS THROUGHOUT CONSTRUCTION UNLESS OTHERWISE SHOWN ON THE PLANS.
14. THE CONTRACTOR SHALL BE RESPONSIBLE FOR COORDINATING ALL WORK AND OTHER DISRUPTIONS WITH THE OWNER.
15. ALL UTILITY WORK INVOLVING CONNECTIONS TO EXISTING SYSTEMS SHALL BE COORDINATED WITH THE ENGINEER AND THE OWNER. NOTIFY THE ENGINEER AND THE OWNER 72 HOURS BEFORE EVERY CONNECTION TO EXISTING SYSTEMS IS MADE.
16. CONTRACTOR SHALL TAKE CARE TO PREVENT DAMAGE TO EXISTING UTILITIES. DAMAGED UTILITIES SHALL BE IMMEDIATELY REPAIRED BY CONTRACTOR AT THE CONTRACTOR'S EXPENSE.
17. THE CONTRACTOR SHALL TAKE TIES TO ALL UTILITY CONNECTIONS AND PROVIDE AS-BUILT PLANS FOR ALL UTILITIES SHOWING TIES TO CONNECTIONS, BENDS, VALVES, LENGTHS OF LINES, AND INVERTS. AS-BUILT PLANS SHOWING ALL UNDERGROUND UTILITIES INSTALLED OR ENCOUNTERED SHALL BE REVIEWED BY THE OWNER AND/OR THE ENGINEER. THE CONTRACTOR SHALL PROVIDE ANY CORRECTION OR ADMISSIONS TO THE SATISFACTION OF THE OWNER AND/OR THE ENGINEER BEFORE UTILITIES WILL BE ACCEPTED.
18. TEMPORARY PAVEMENT SHALL BE PLACED WITHIN 48 HOURS OF COMPLETION OF EXCAVATION AND BACKFILL OPERATIONS WITHIN THE EXISTING PAVEMENT LIMITS.
19. ALL EXCAVATIONS SHALL BE BACKFILLED TO EXISTING GRADE AT THE END OF EACH WORK DAY.
20. THE CONTRACTOR SHALL RESTORE LAWNS, DRIVEWAYS, CULVERTS, SIGNS AND OTHER PUBLIC OR PRIVATE PROPERTY DAMAGED OR REMOVED TO AT LEAST AS GOOD A CONDITION AS BEFORE BEING DISTURBED AS DETERMINED BY THE ENGINEER. ANY DAMAGED TREES, SHRUBS, AND/OR HEDGES SHALL BE REPLACED AT THE CONTRACTOR'S EXPENSE.

LEGEND

DESCRIPTION	EXISTING	PROPOSED
FENCE		
5' OR 10' CONTOUR LINE	250	250
1' OR 2' CONTOUR LINE	202	202
SPOT ELEVATION	120.5 OR x120.5	120.5 OR x120.5
DITCH OR SWALE		
EDGE OF STREAM OR RIVER		
LAKE OR POND		
PROPERTY LINE	PL	
SILT FENCE		SF
GRADING LIMITS		
EDGE OF PAVEMENT		
CURB		
EDGE OF GRAVEL/DIRT ROAD		
EDGE OF WOODS		
BUILDING		
STORM SEWER	(TYPE) STORM SEWER	
SANITARY SEWER	(TYPE) SANITARY SEWER S	S
FORCE MAIN	(TYPE) FORCE MAIN FM	FM
WATER LINE	(TYPE) WATER LINE W	
MINERAL WATER	(TYPE) MINERAL WATER LINE M	M
GAS LINE	(TYPE) GAS LINE G	GAS
UNDERGROUND ELECTRIC	UNDERGROUND ELECTRIC E	UE
UNDERGROUND TELEPHONE	UNDERGROUND TELEPHONE T	TELE
OVERHEAD ELECTRIC/TELEPHONE	OVERHEAD WIRES E	OE
UNDERDRAIN		UD
GUIDE RAIL		
CLEANOUT		CO
END SECTION	>	OR
CATCH BASIN		
STORM MANHOLE		
HYDRANT		
WATER VALVE/CONTROL VALVE		
SANITARY SEWER MANHOLE		• OR
PULL BOX		
TELEPHONE PEDESTAL		
ELECTRIC BOX		PB
LIGHT POLE, LAMP POST		
POWER POLE / UTILITY POLE		

LEGEND (CONTINUED)

DESCRIPTION	EXISTING	PROPOSED
SIGN - SINGLE FACED		OR
SIGN - DOUBLE FACED		OR
MARKER		
CONCRETE MONUMENT		
RIGHT-OF-WAY MONUMENT		
IRON ROD, PIN, OR PIPE		
BORING LOCATION	B-1	
CBR LOCATION	CBR-1	CBR
WETLAND/MARSH		
TREES, SHRUBS, BUSHES		XX-3 XX-5
DETAIL CALLOUT	X DETAIL IDENTIFICATION NO. X-X SHEET NO. WHERE DETAIL IS SHOWN	
DETAIL IDENTIFICATION NO.	X DETAIL TITLE SCALE:	

NOTE: SOME FEATURES IN THE LEGEND MAY NOT HAVE BEEN USED

TABLE OF ABBREVIATIONS

ABS	PLASTIC PIPE	LT	LEFT
AC	ACRE	LWL	LOW WATER LEVEL
ALT	ALTERNATE	MFR	MANUFACTURER
APPROX	APPROXIMATE	MH	MANHOLE
ASPH	ASPHALT	MIN	MINIMUM
BL	BASELINE	MISC	MISCELLANEOUS
BLDG	BUILDING	N	NORTH
BM	BENCHMARK	NIC	NOT IN CONTRACT
BOT	BOTTOM	NTS	NOT TO SCALE
BPV	BACK PRESSURE VALVE	O/S	OFFSET
CB	CATCH BASIN	OAR	OWNER'S AUTHORIZED REPRESENTATIVE
CF	CUBIC FOOT OR CUBIC FEET	PL	PROPERTY LINE
CFM	CUBIC FEET PER MINUTE	PE	PERMANENT EASEMENT
CI	CURB INLET	PERP	PERPENDICULAR
CIP	CAST IRON PIPE	PP	POWER POLE, POWER PANEL
CL	CLASS OR CENTERLINE	PPM	PARTS PER MILLION
CO	CLEANOUT	PRV	PRESSURE RELEASE VALVE
CONC	CONCRETE	PSF	POUNDS PER SQUARE FOOT
CR	COUNTRY ROAD	PSI	POUNDS PER SQUARE INCH
CTR	CENTER	PT	PRESSURE TRANSDUCER
CV	CHECK VALVE	PVC	POLYVINYL CHLORIDE
CY	CUBIC YARD	PWR	POWER
DCV	DOUBLE CHECK VALVE	R	RADIUS
DI	DROP INLET	RAD	RADIAL
DIA	DIAMETER	RCP	REINFORCED CONCRETE PIPE
DIP	DUCTILE IRON PIPE	REINF	REINFORCING
DWG	DRAWING	REQD	REQUIRED
E	EAST	ROW	RIGHT-OF-WAY
EA	EACH	RPM	REVOLUTIONS PER MINUTE
EJ	EXPANSION JOINT	RT	RIGHT
ELEC	ELECTRIC	RW	RETAINING WALL
ELEV	ELEVATION	S	SOUTH
EOP	EDGE OF PAVEMENT	SCH	SCHEDULE
FM	FLOW METER	SF	SQUARE FOOT OR SQUARE FEET
FT	FOOT OR FEET	SHT	SHEET
GAL	GALLON	SMH	SANITARY MANHOLE
GPM	GALLONS PER MINUTE	SPECS	SPECIFICATIONS
GRD	GROUND OR GRADE	SQ	SQUARE
GV	GATE VALVE	STA	STATION OR STATIONARY
HDD	HORIZONTAL DIRECTIONAL DRILL	STMH	STORM MANHOLE
HORIZ	HORIZONTAL	SY	SQUARE YARD
HP	HIGH POINT OR HORSE POWER	TC	TOP OF CURB
HR	HAND RAIL OR HOUR	TE	TEMPORARY EASEMENT
HT	HEIGHT	TEL	TELEPHONE
HW	HEADWALL	TEMP	TEMPORARY
HWL	HIGH WATER LEVEL	TF	TOP OF FRAME
HYD	HYDRANT	TYP	TYPICAL
IN	INCH(ES)	U(ND)G	UNDERGROUND
JB	JUNCTION BOX	UTIL	UTILITY
LAT	LATITUDE	VERT	VERTICAL
LB	POUND	VOL	VOLUME
LF	LINEAR FOOT OR LINEAR FEET	W	WEST
LONG	LONGITUDE	W/	WITH
LP	LAMP POST, LIGHT POLE, LIGHT PANEL OR LOW POINT	W/O	WITHOUT

NOTE: SOME ABBREVIATIONS MAY NOT HAVE BEEN USED

NEW YORK STATE OF OPPORTUNITY. Office of General Services
DESIGN & CONSTRUCTION

CONSULTANT

Drawing Copyright © 2020

CHA
8 Winners Circle, PO Box 5269 , Albany, NY 12205-0269

ENERGY CODE COMPLIANCE WRITTEN STATEMENT:
TO THE BEST OF MY KNOWLEDGE, BELIEF AND PROFESSIONAL JUDGMENT, THE DRAWINGS BEARING MY PROFESSIONAL SEAL AND SIGNATURE MEET OR EXCEED THE NEW YORK STATE ENERGY CONSERVATION CODE IECC 2015 WITH 2016 NYS AMENDMENTS.

WARNING:
THE ALTERATION OF THIS MATERIAL IN ANY WAY, UNLESS DONE UNDER THE DIRECTION OF A COMPARABLE PROFESSIONAL, I.E. ARCHITECT FOR AN ARCHITECT, ENGINEER FOR AN ENGINEER OR LANDSCAPE ARCHITECT FOR A LANDSCAPE ARCHITECT, IS A VIOLATION OF THE NEW YORK STATE EDUCATION LAW AND/OR REGULATIONS AND IS A CLASS "A" MISDEMEANOR.

STATE OF NEW YORK · ERIC T. HIRSCHMANN · 101039 · LICENSED PROFESSIONAL ENGINEER

CONTRACT:
CONSTRUCTION

TITLE:
INSTALL WATER TANK

LOCATION:
TOWN OF WALLKILL REST AREA
MIDDLETOWN, NY

CLIENT:
NYS DEPT. OF TRANSPORTATION

MARK	DATE	DESCRIPTION
1	11/05/2020	DOH REVISIONS
	9/11/2020	BID DOCUMENTS

PROJECT NUMBER:	J1405
DESIGNED BY:	ETH
DRAWN BY:	KSM
FIELD CHECK:	
APPROVED:	
SCALE:	

SHEET TITLE:
LEGEND & GENERAL NOTES

DRAWING NUMBER:
G-002

SHEET 2 OF 20

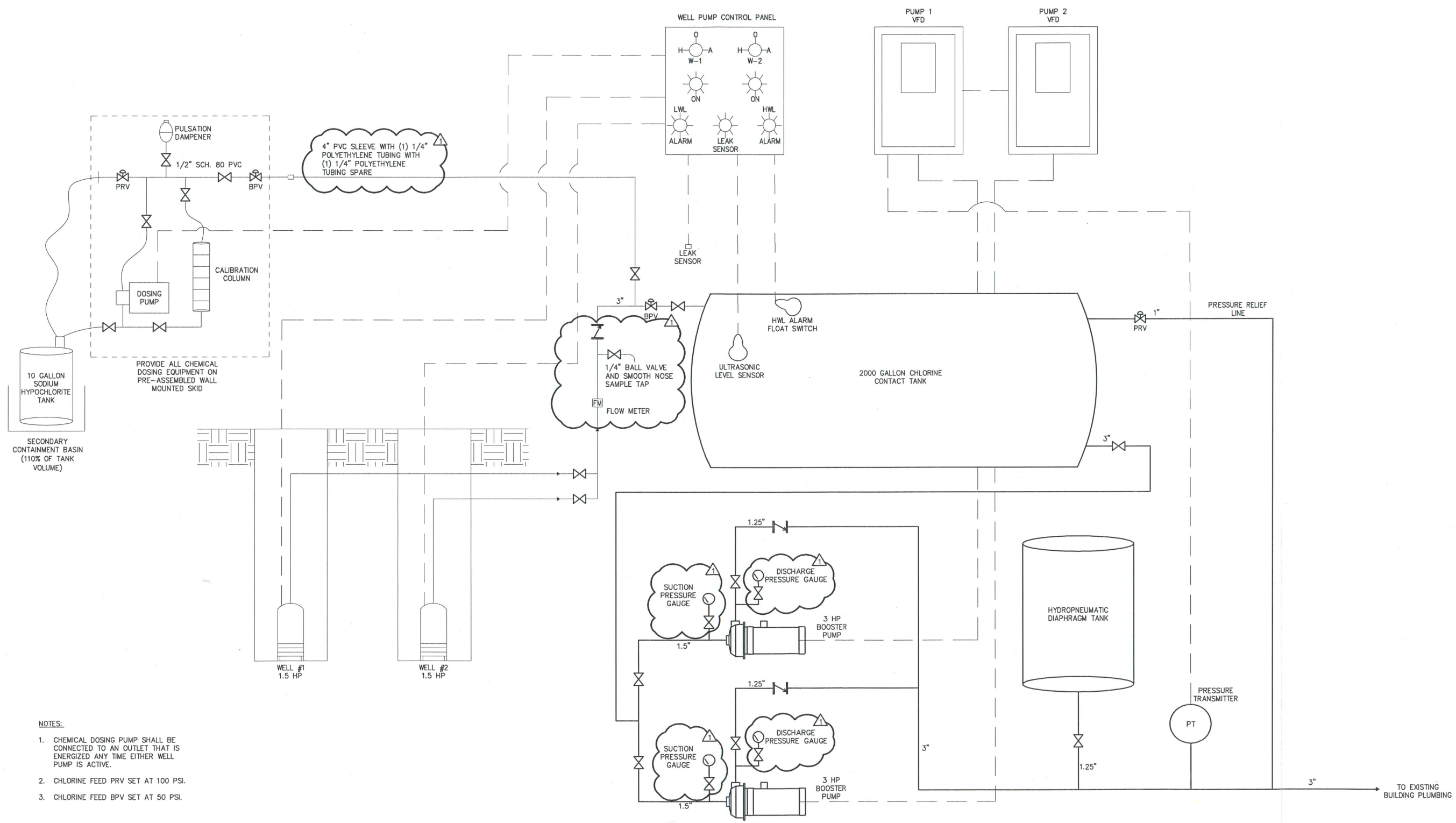

NOTES:

1. CHEMICAL DOSING PUMP SHALL BE CONNECTED TO AN OUTLET THAT IS ENERGIZED ANY TIME EITHER WELL PUMP IS ACTIVE.
2. CHLORINE FEED PRV SET AT 100 PSI.
3. CHLORINE FEED BPV SET AT 50 PSI.

NEW YORK STATE OF OPPORTUNITY. Office of General Services

DESIGN & CONSTRUCTION

CONSULTANT

Drawing Copyright © 2020

CHA

III Winners Circle, PO Box 5269, Albany, NY 12205-0269

ENERGY CODE COMPLIANCE WRITTEN STATEMENT:

TO THE BEST OF MY KNOWLEDGE, BELIEF AND PROFESSIONAL JUDGMENT, THE DRAWINGS BEARING MY PROFESSIONAL SEAL AND SIGNATURE MEET OR EXCEED THE NEW YORK STATE ENERGY CONSERVATION CODE IECC 2015 WITH 2016 NYS AMENDMENTS.

WARNING:

THE ALTERATION OF THIS MATERIAL IN ANY WAY, UNLESS DONE UNDER THE DIRECTION OF A COMPARABLE PROFESSIONAL, I.E. ARCHITECT FOR AN ARCHITECT, ENGINEER FOR AN ENGINEER OR LANDSCAPE ARCHITECT FOR A LANDSCAPE ARCHITECT, IS A VIOLATION OF THE NEW YORK STATE EDUCATION LAW AND/OR REGULATIONS AND IS A CLASS 'A' MISDEMEANOR.

STATE OF NEW YORK · ERIC T. HIRSCHMANN · 101039 · LICENSED PROFESSIONAL ENGINEER

CONTRACT:
CONSTRUCTION

TITLE:
INSTALL WATER TANK

LOCATION:
TOWN OF WALLKILL REST AREA
MIDDLETOWN, NY

CLIENT:
NYS DEPT. OF TRANSPORTATION

MARK	DATE	DESCRIPTION
1	11/05/2020	DOH REVISIONS
	9/11/2020	BID DOCUMENTS

PROJECT NUMBER:	J1405
DESIGNED BY:	ETH
DRAWN BY:	KSM
FIELD CHECK:	
APPROVED:	
SCALE:	NOT TO SCALE

SHEET TITLE:
PROCESS & INSTRUMENTATION DIAGRAM

DRAWING NUMBER:
C-101

SHEET 3 OF 20

NOTES:

1. THE ORIGINAL BURIED 15,000 GALLON HYDROPNEUMATIC TANK HAS ALREADY BEEN REMOVED, DISPOSED, AND BACKFILLED. RESEED AND RESTORE CONCRETE PICNIC PATIO SLAB AND RESET PICNIC TABLE IN FORMER TANK LOCATION.
2. HDPE PIPE TO BE DR-9 RATED FOR 200 PSI. PROVIDE TRACER WIRE AND LOCATING TAPE ALONG WITH HDPE PIPE. PROVIDE A MINIMUM OF 5' COVER FOR ALL BURIED WATER PIPE.
3. BALL CURB VALVES TO BE BRASS COMPRESSION STYLE BY MUELLER OR APPROVED EQUAL.
4. TRENCHED PIPE TO BE INSTALLED USING SUITABLE BEDDING AND BACKFILL. SEE DETAIL 3 SHEET C-601.
5. REPAIR APPROXIMATELY 50 SF OF SIDEWALK AFTER PIPE INSTALLATION.

NEW YORK STATE OF OPPORTUNITY | Office of General Services

DESIGN & CONSTRUCTION

CONSULTANT

Drawing Copyright © 2020

CHA

III Winners Circle, PO Box 5269, Albany, NY 12205-0269

ENERGY CODE COMPLIANCE WRITTEN STATEMENT:

TO THE BEST OF MY KNOWLEDGE, BELIEF AND PROFESSIONAL JUDGMENT, THE DRAWINGS BEARING MY PROFESSIONAL SEAL AND SIGNATURE MEET OR EXCEED THE NEW YORK STATE ENERGY CONSERVATION CODE IECC 2015 WITH 2016 NYS AMENDMENTS.

WARNING:

THE ALTERATION OF THIS MATERIAL IN ANY WAY, UNLESS DONE UNDER THE DIRECTION OF A COMPARABLE PROFESSIONAL, I.E. ARCHITECT FOR AN ARCHITECT, ENGINEER FOR AN ENGINEER OR LANDSCAPE ARCHITECT FOR A LANDSCAPE ARCHITECT, IS A VIOLATION OF THE NEW YORK STATE EDUCATION LAW AND/OR REGULATIONS AND IS A CLASS 'A' MISDEMEANOR.

STATE OF NEW YORK · ERIC T. HIRSCHMAN · 101039 · LICENSED PROFESSIONAL ENGINEER

CONTRACT:
CONSTRUCTION

TITLE:
INSTALL WATER TANK

LOCATION:
TOWN OF WALLKILL REST AREA
MIDDLETOWN, NY

CLIENT:
NYS DEPT. OF TRANSPORTATION

MARK	DATE	DESCRIPTION
1	11/05/2020	DOH REVISIONS
	9/11/2020	BID DOCUMENTS

PROJECT NUMBER:	J1405
DESIGNED BY:	ETH
DRAWN BY:	KSM
FIELD CHECK:	
APPROVED:	
SCALE:	1" = 10'

SHEET TITLE:
SITE PLAN

DRAWING NUMBER:
C-102

SHEET 4 OF 20

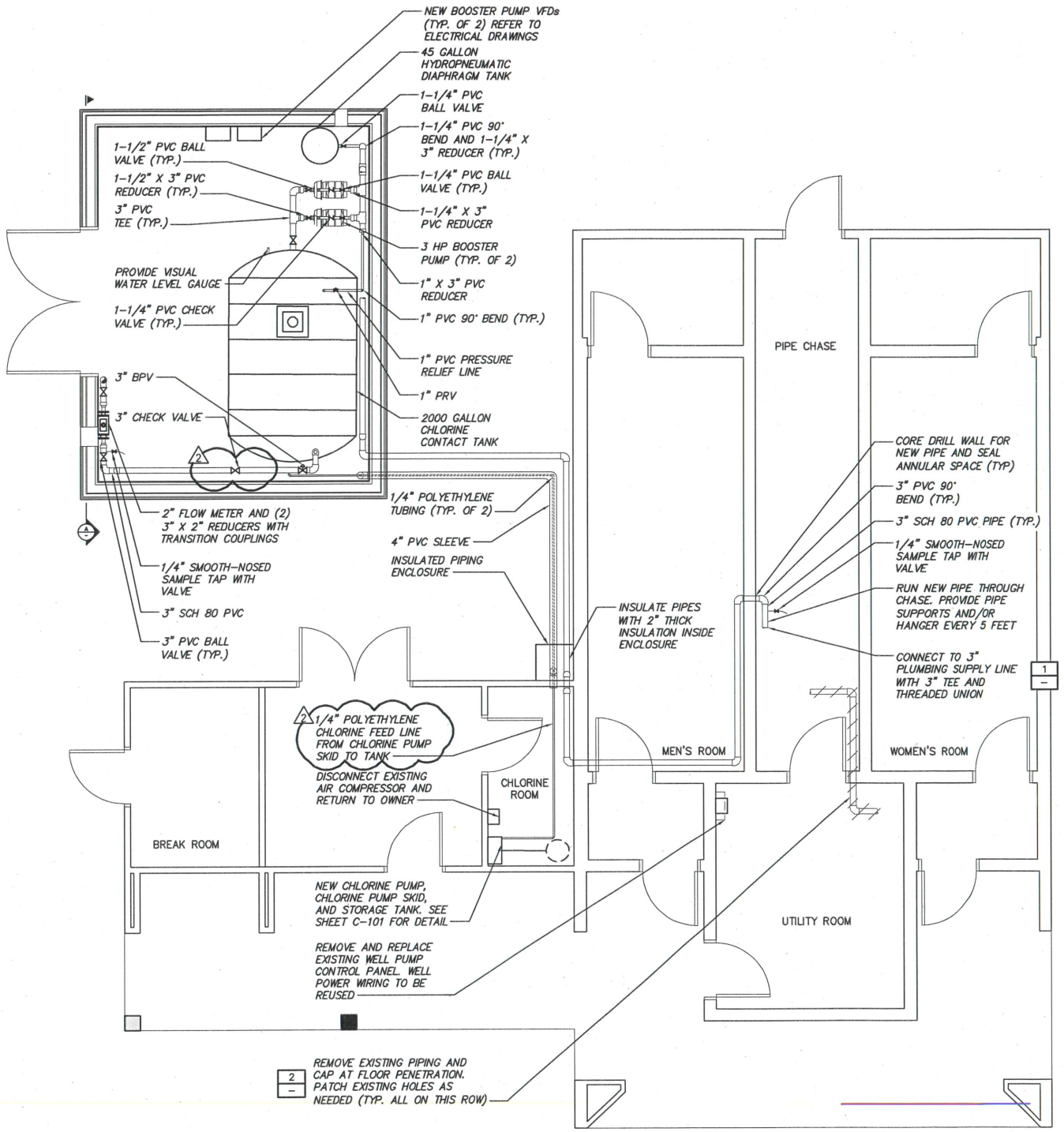

WATER SYSTEM PLAN

SCALE: 3" = 1'-0"

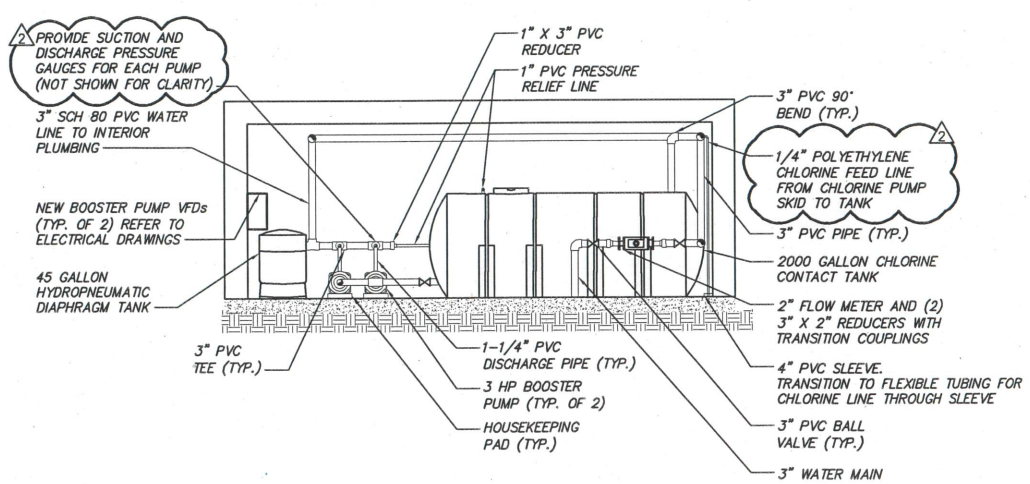

A SECTION "A"

SCALE: 3" = 1'-0"

NOTE:

1. VERIFY ALL PIPE SIZES PRIOR TO ORDERING MATERIALS

1 PIPE CHASE PIPING CONNECTION

SCALE: N.T.S.

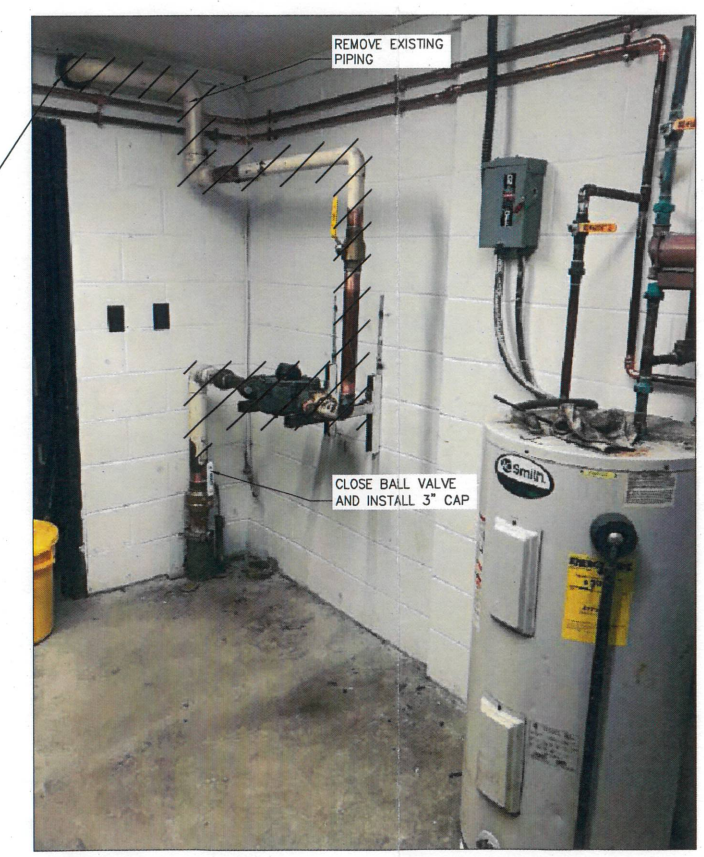

2 EXISTING WATER SERVICE ABANDONMENT & REMOVAL

SCALE: N.T.S.

1. EXISTING CONTROL WIRING FOR CHLORINE PUMP TO BE RE-USED, BUT RECEPTACLE ADJACENT TO CHLORINE PUMP TO BE REPLACED.

2. CHLORINE PUMP TO BE MODEL PULSATRON MP SERIES BY PULSAFEEDER, OR APPROVED EQUAL, RATED FOR 0.020 GALLONS PER HOUR. ADJUST TO PROVIDE 1.0 PPM CHLORINE DOSE IN THE CHLORINE CONTACT TANK. CHLORINE PUMP TO BE MOUNTED ON A PRE-FABRICATED SKID, COMPLETE WITH ISOLATION VALVES, PRESSURE RELIEF VALVE, BACKPRESSURE / ANTI-SIPHON VALVE, CALIBRATION COLUMN, AND PULSATION DAMPENER. CHLORINE FEED EQUIPMENT TO BE BY GRIFFCO OR APPROVED EQUAL. 10 GALLON CHLORINE STORAGE TANK SHALL BE BY LMI OR APPROVED EQUAL. INCLUDE SECONDARY CONTAINMENT BASIN CAPABLE OF STORING 110% OF THE TANK CAPACITY.

3. BOOSTER PUMPS TO BE AQUAVAR 3AVN310HM03 BY GOULDS, OR APPROVED EQUAL, RATED FOR 25 GPM AT 156 FEET. BOOSTER PUMP VFDs SHALL BE WIRED TOGETHER SO THE PUMPS RUN IN A LEAD-LAG ARRANGEMENT. PROVIDE NEW PRESSURE TRANSMITTER TO MONITOR THE DISCHARGE PRESSURE IN THE BUILDING PLUMBING PIPING. THE LEAD PUMP SPEED SHALL BE ADJUSTED AUTOMATICALLY BASED ON THE READING FROM THE DISCHARGE PRESSURE TRANSMITTER TO MAINTAIN 50 PSI, WITH A MINIMUM PRESSURE OF 35 PSI AND A MAXIMUM PSI OF 65 PSI (ALL ADJUSTABLE). THE MINIMUM PUMP SPEED SHALL BE 50 Hz (ADJUSTABLE), AND THE VFD SHALL AUTOMATICALLY SWITCH OFF THE PUMP AFTER OPERATING AT THE MINIMUM PUMP SPEED FOR 2 MINUTES OR IF THE MAXIMUM PRESSURE SETPOINT IS REACHED, WHICHEVER COMES FIRST. THE MAXIMUM PUMP SPEED SHALL BE 60 Hz. IF THE LEAD PUMP IS OPERATING AT 60 Hz AND IS UNABLE TO MAINTAIN THE MINIMUM PRESSURE, THE LAG PUMP SHALL BE STARTED AND THE TWO PUMPS WILL OPERATE AT SYNCHRONIZED SPEEDS TO MAINTAIN THE SET POINT. THE VFDs SHALL AUTOMATICALLY ALTERNATE THE LEAD PUMP STATUS AFTER EACH PUMP CYCLE.

4. HYDROPNEUMATIC TANK TO BE BLADDER STYLE, MODEL #V140 BY GOULDS. PRE CHARGE PRESSURE TO BE 38 PSI.

5. CHLORINE CONTACT TANK TO BE FREESTANDING POLYETHYLENE CONSTRUCTION WITH INTEGRATED LEGS, 2000 GALLONS NOMINAL STORAGE, AND TO BE FITTED WITH PORTS OF THE SIZE AND PLACEMENT SHOWN. TANK TO BE BY SNYDER INDUSTRIES OR APPROVED EQUAL.

6. 3-INCH BACKPRESSURE VALVE TO SUSTAIN 50 PSI UPSTREAM PRESSURE AND BE MODEL 23RWR BY ROSS VALVE OR APPROVED EQUAL.

7. 1-INCH PRESSURE RELIEF VALVE TO BE SET AT 80 PSI (ADJUSTABLE) AND BE MODEL 20 WR BY ROSS VALVE OR APPROVED EQUAL.

8. PROVIDE ULTRASONIC LEVEL SENSOR AND HIGH WATER LEVEL FLOAT SWITCH INSIDE CHLORINE CONTACT TANK AND WIRE BACK TO NEW WELL CONTROL PUMP PANEL. INCLUDE MOUNTING HARDWARE AS NECESSARY. LEVEL INSTRUMENTATION SHALL BE BY FLOWLINE OR APPROVED EQUAL.

9. WELL PUMP CONTROL PANEL SHALL START THE LEAD WELL PUMP WHEN THE WATER LEVEL IN THE TANK IS 12 INCHES FROM THE TOP OF THE TANK OR BELOW, AND STOP THE PUMP WHEN IT IS 6 INCHES FROM THE TOP OF THE TANK. THE HIGH WATER LEVEL FLOAT SWITCH SHALL BE MOUNTED 4 INCHES FROM THE TOP OF THE TANK. WHEN THE HWL FLOAT SWITCH IS TRIPPED THE WELL PUMPS SHALL BE STOPPED AND THE HWL ALARM ACTIVATED. WHEN THE WATER LEVEL IS BELOW 24 INCHES, THE PANEL WILL SIGNAL A LOW WATER LEVEL ALARM AND LOCK OUT OPERATION OF THE BOOSTER PUMPS. THE WELL PUMP CONTROL PANEL SHALL AUTOMATICALLY ALTERNATE OPERATION OF THE WELL PUMPS AFTER EACH CYCLE. THE CONTROL PANEL SHALL ENERGIZE THE CHLORINE PUMP OUTLET ANY TIME EITHER WELL IS ACTIVE SO THE CHLORINE PUMP OPERATION WILL BE SYNCHRONIZED WITH THE WELLS.

10. ALL INTERIOR WATER PIPING TO BE SCHEDULE 80 PVC OR APPROVED EQUAL. CHLORINE PIPING TO BE SCH 80 PVC EXCEPT WITHIN PIPE SLEEVE (TRANSITION TO FLEXIBLE ¼" POLYETHLYENE TUBING. PROVIDE PIPE SUPPORTS FOR WATER AND CHLORINE PIPING, AT A MINIMUM EVERY FIVE FEET, AT CHANGES IN DIRECTION, OR TO SUPPORT HEAVIER ITEMS SUCH AS VALVES AND WATER METERS.

11. WATER METER TO BE 2-INCH E-SERIES ULTRASONIC FLOW METER BY BADGER OR APPROVED EQUAL. PROVIDE REDUCERS AND TRANSITION COUPLINGS AS NEEDED TO MAKE CONNECTION.

12. DISINFECT AND TEST ALL PIPING ACCORDING TO THE LATEST EDITION OF AWWA C-653. BEFORE PIPING CAN BE PLACED INTO SERVICE, CONTRACTOR SHALL OBTAIN A MINIMUM OF TWO (2) WATER SAMPLES, COLLECTED 24 HOURS APART, FROM THE ENTRY POINT TO THE BUILDING PLUMBING. THE SAMPLES SHALL BE TESTED FOR TOTAL COLIFORM BACTERIA. TESTING FOR VOLATILE ORGANIC CONTAMINANTS (VOCs) WILL ALSO BE REQUIRED IF SOLVENT WELDED PVC PIPING IS USED.

13. WETTED SURFACES OF ALL PIPING, VALVES, EQUIPMENT, AND APPURTENANCES SHALL BE CERTIFIED LEAD FREE AND CONSTRUCTED OF MATERIALS THAT ARE NSF61 APPROVED FOR DRINKING WATER.

14. SLOPE FLOOR SLAB TOWARDS FLOOR DRAIN. REFER TO STRUCTURAL DRAWINGS.

NEW YORK STATE OF OPPORTUNITY. Office of General Services

DESIGN & CONSTRUCTION

CONSULTANT

Drawing Copyright © 2020

CHA

8 Winners Circle, PO Box 5269 , Albany, NY 12205-0269

ENERGY CODE COMPLIANCE WRITTEN STATEMENT:

TO THE BEST OF MY KNOWLEDGE, BELIEF AND PROFESSIONAL JUDGMENT, THE DRAWINGS BEARING MY PROFESSIONAL SEAL AND SIGNATURE MEET OR EXCEED THE NEW YORK STATE ENERGY CONSERVATION CODE ECC 2015 WITH 2016 NYS AMENDMENTS.

WARNING:

THE ALTERATION OF THIS MATERIAL IN ANY WAY, UNLESS DONE UNDER THE DIRECTION OF A COMPARABLE PROFESSIONAL, I.E. ARCHITECT FOR AN ARCHITECT, ENGINEER FOR AN ENGINEER OR LANDSCAPE ARCHITECT FOR A LANDSCAPE ARCHITECT, IS A VIOLATION OF THE NEW YORK STATE EDUCATION LAW AND/OR REGULATIONS AND IS A CLASS 'A' MISDEMEANOR.

STATE OF NEW YORK · ERIC T. HIRSCHMANN · 101039 · LICENSED PROFESSIONAL ENGINEER

CONTRACT: CONSTRUCTION

TITLE: INSTALL WATER TANK

LOCATION: TOWN OF WALLKILL REST AREA MIDDLETOWN, NY

CLIENT: NYS DEPT. OF TRANSPORTATION

MARK	DATE	DESCRIPTION
2	11/05/2020	DOH REVISIONS
1	9/29/2020	WATER REVISIONS
	9/11/2020	BID DOCUMENTS

PROJECT NUMBER:	J1405
DESIGNED BY:	ETH
DRAWN BY:	KSM
FIELD CHECK:	
APPROVED:	
SCALE:	3" = 1'-0"

SHEET TITLE: BUILDING PIPING PLAN

DRAWING NUMBER: C-103

SHEET 5 OF 20

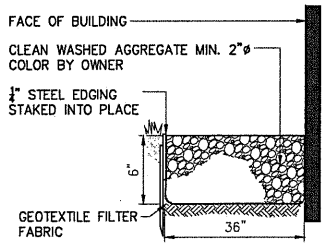

1 DRIP EDGE DETAIL
SCALE: N.T.S.

NOTE:

1. THIS DETAIL IS NOT SUBJECT TO THE REVIEW AND APPROVAL OF THE OCDOH.

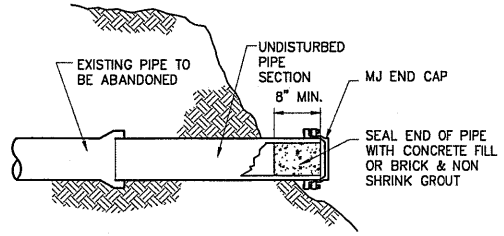

2 PIPE CAPPING AND ABANDONMENT DETAIL
SCALE: N.T.S.

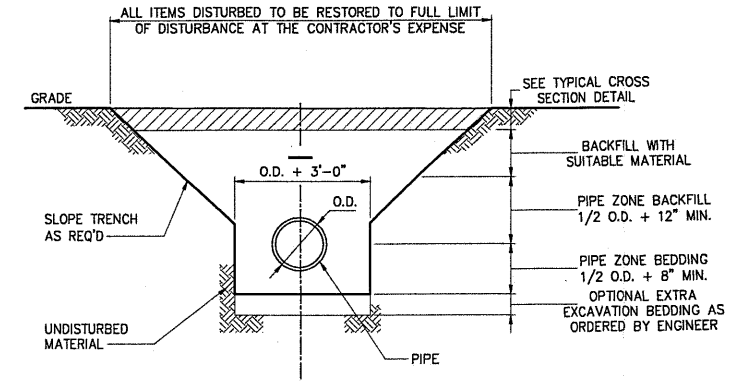

NOTES:

1. PIPE ZONE BEDDING AND BACKFILL MATERIAL TO BE 3/4" CRUSHED STONE OR SAND.
2. NATIVE RUN OF TRENCH MATERIAL MAY BE CONSIDERED SUITABLE MATERIAL IF IT IS FREE OF COBBLES, LARGE ROCKS, AND CLAYS.

3 TYPICAL TRENCH DETAIL
SCALE: N.T.S.

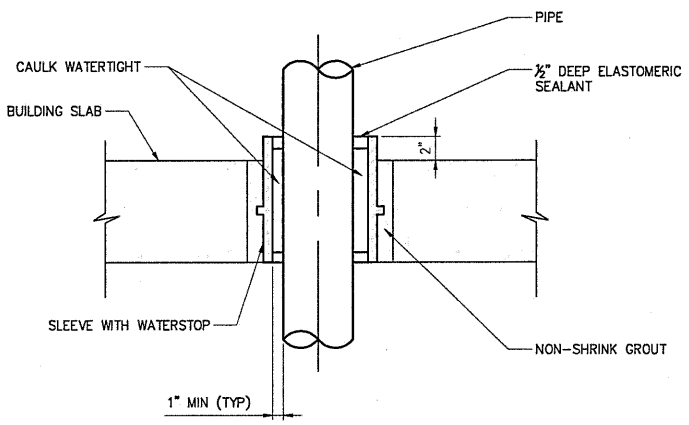

4 TYPICAL SLEEVE IN FLOOR SLAB DETAIL
SCALE: N.T.S.

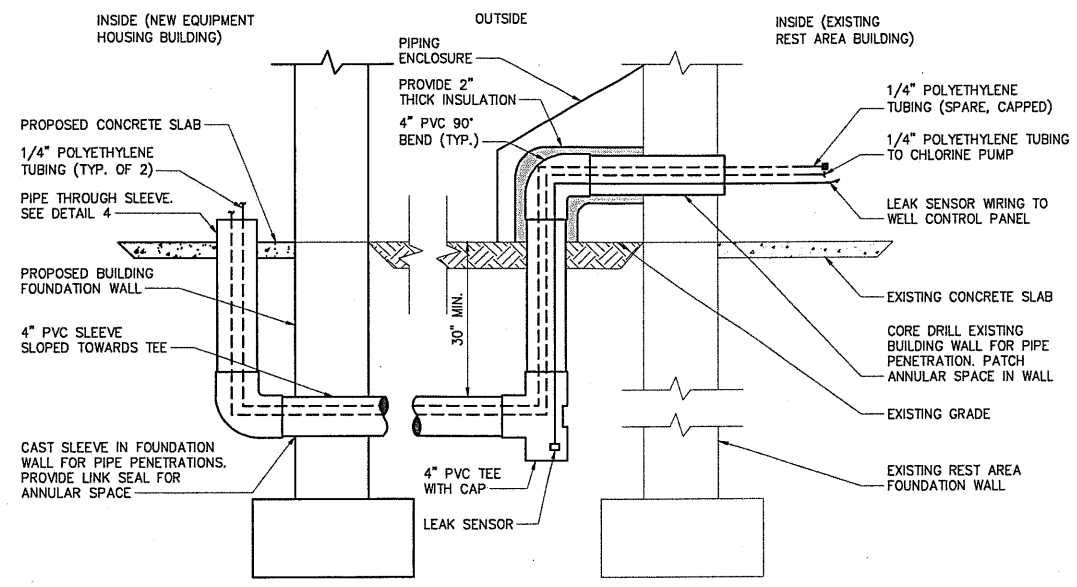

5 CHLORINE SLEEVE FLOOR DETAIL
SCALE: N.T.S.

NOTE:

1. LEAK SENSOR SHALL BE SERIES WD3 WATER LEAK DETECTOR BY DWYER INSTRUMENTS OR APPROVED EQUAL

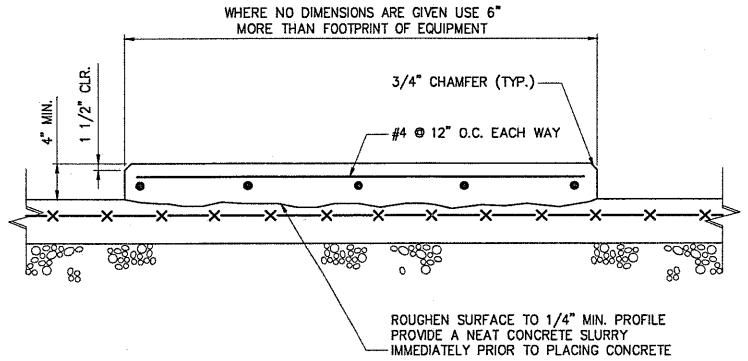

6 HOUSEKEEPING PAD DETAIL
SCALE: N.T.S.

NEW YORK STATE OF OPPORTUNITY | Office of General Services

DESIGN & CONSTRUCTION

CONSULTANT

Drawing Copyright © 2020

CHA

III Winners Circle, PO Box 5269, Albany, NY 12205-0269

ENERGY CODE COMPLIANCE WRITTEN STATEMENT:

TO THE BEST OF MY KNOWLEDGE, BELIEF AND PROFESSIONAL JUDGMENT, THE DRAWINGS BEARING MY PROFESSIONAL SEAL AND SIGNATURE MEET OR EXCEED THE NEW YORK STATE ENERGY CONSERVATION CODE IECC 2015 WITH 2016 NYS AMENDMENTS.

WARNING:

THE ALTERATION OF THIS MATERIAL IN ANY WAY, UNLESS DONE UNDER THE DIRECTION OF A COMPARABLE PROFESSIONAL, I.E. ARCHITECT FOR AN ARCHITECT, ENGINEER FOR AN ENGINEER OR LANDSCAPE ARCHITECT FOR A LANDSCAPE ARCHITECT, IS A VIOLATION OF THE NEW YORK STATE EDUCATION LAW AND/OR REGULATIONS AND IS A CLASS "A" MISDEMEANOR.

STATE OF NEW YORK · ERIC T. HIRSCHMANN · 101039 · LICENSED PROFESSIONAL ENGINEER

CONTRACT:
CONSTRUCTION

TITLE:
INSTALL WATER TANK

LOCATION:
TOWN OF WALLKILL REST AREA
MIDDLETOWN, NY

CLIENT:
NYS DEPT. OF TRANSPORTATION

MARK	DATE	DESCRIPTION
1	11/05/2020	DOH REVISIONS
	9/11/2020	BID DOCUMENTS

PROJECT NUMBER:	J1405
DESIGNED BY:	ETH
DRAWN BY:	KSM
FIELD CHECK:	
APPROVED:	
SCALE:	AS SHOWN

SHEET TITLE:
CIVIL, TANK, &
PIPING DETAILS

DRAWING NUMBER:
C-601

SHEET 6 OF 20