TANY 08-17A

NEW YORK STATE THRUWAY AUTHORITY

NEW YORK DIVISION
PLANS FOR
REHABILITATION OF THE WASTEWATER TREATMENT PLANT
AT THE
STORMVILLE SERVICE AREA
I-84 MILEPOST 55.57 WB
IN
DUTCHESS COUNTY

34 SHEETS

TANY 08-17A

D213697

DIG SAFELY_NEW YORK
Underground Facilities Protective Organization
1-800-962-7962

NOTES:

WARNING: IT IS A VIOLATION OF THE NEW YORK STATE EDUCATION LAW FOR ANY PERSON UNLESS ACTING UNDER THE DIRECTION OF A LICENSED PROFESSIONAL ARCHITECT OR ENGINEER, TO ALTER AN ITEM ON THESE PLANS IN ANY WAY. IF ALTERATIONS TO THESE PLANS ARE REQUIRED, THE ALTERATIONS SHALL BE MADE IN ACCORDANCE WITH ARTICLE 145 – SUBSECTION 7209 OF THE NEW YORK STATE EDUCATION LAW.

CHANGES MADE, IF ANY, TO THESE PLANS AND RELATED CONTRACT DOCUMENTS SINCE COMPLETION BY THE CONSULTING ENGINEER MAY BE DETERMINED BY COMPARISON WITH SUCH PREFINAL PLANS AND RELATED DOCUMENTS FILED AT THE THRUWAY DESIGN OFFICE OR THOSE FILED AT THE OFFICE OF THE CONSULTING ENGINEER.

SIGNATURES HEREON HAVE BEEN AFFIXED BY PERSONS ACTING IN THEIR OFFICIAL CAPACITY AS INDICATED.

DESIGN LOAD TABLE (psf)

LOCATION	DEAD LOAD	LIVE LOAD	TOTAL
ROOF	20	55	75
WIND	–	25.6	25.6

TABLE OF INSULATION VALUES

LOCATION	AVERAGE R-VALUE
FOUNDATION	R-10
EXTERIOR WALLS	R-20
ROOF	R-30

ENERGY CODE COMPLIANCE STATEMENT

To the best of my knowledge, belief and professional judgment, these Contract Documents (Plans and Specifications) are in compliance with 19 NYCRR Part 1240, the Energy Conservation Construction Code of New York State.

Name Stephen Hadjiyane Lic. No. 066695

Signature Date 4/23/07

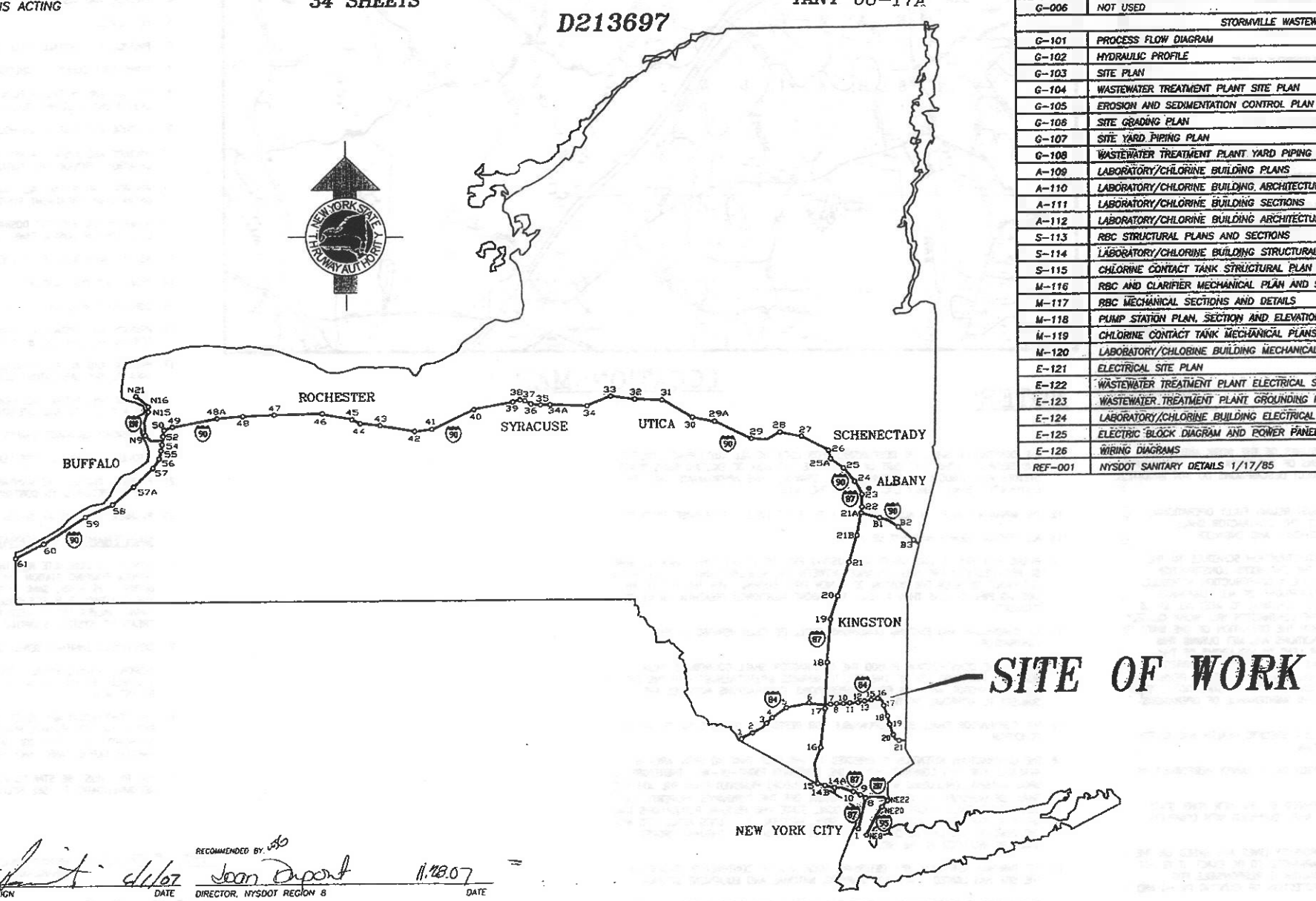

INDEX OF DRAWINGS

DWG. NO.	TITLE	SHT. NO.
	GENERAL DRAWINGS	
–	TITLE SHEET	1 OF 34
G-001	LOCATION PLAN, GENERAL NOTES, SYMBOLS AND ABBREVIATIONS	2 OF 34
G-002	GENERAL STRUCTURAL NOTES	3 OF 34
G-003	MISCELLANEOUS DETAILS I	4 OF 34
G-004	MISCELLANEOUS DETAILS II	5 OF 34
G-005	ELECTRICAL NOTES, SYMBOLS, ABBREVIATIONS AND TYPICAL DETAILS	6 OF 34
G-006	NOT USED	7 OF 34
	STORMVILLE WASTEWATER TREATMENT PLANT	
G-101	PROCESS FLOW DIAGRAM	8 OF 34
G-102	HYDRAULIC PROFILE	9 OF 34
G-103	SITE PLAN	10 OF 34
G-104	WASTEWATER TREATMENT PLANT SITE PLAN	11 OF 34
G-105	EROSION AND SEDIMENTATION CONTROL PLAN	12 OF 34
G-106	SITE GRADING PLAN	13 OF 34
G-107	SITE YARD PIPING PLAN	14 OF 34
G-108	WASTEWATER TREATMENT PLANT YARD PIPING PLAN	15 OF 34
A-109	LABORATORY/CHLORINE BUILDING PLANS	16 OF 34
A-110	LABORATORY/CHLORINE BUILDING ARCHITECTURAL ELEVATIONS	17 OF 34
A-111	LABORATORY/CHLORINE BUILDING SECTIONS	18 OF 34
A-112	LABORATORY/CHLORINE BUILDING ARCHITECTURAL DETAILS	19 OF 34
S-113	RBC STRUCTURAL PLANS AND SECTIONS	20 OF 34
S-114	LABORATORY/CHLORINE BUILDING STRUCTURAL PLANS AND SECTIONS	21 OF 34
S-115	CHLORINE CONTACT TANK STRUCTURAL PLAN AND SECTIONS	22 OF 34
M-116	RBC AND CLARIFIER MECHANICAL PLAN AND SECTION	23 OF 34
M-117	RBC MECHANICAL SECTIONS AND DETAILS	24 OF 34
M-118	PUMP STATION PLAN, SECTION AND ELEVATION	25 OF 34
M-119	CHLORINE CONTACT TANK MECHANICAL PLANS AND SECTIONS	26 OF 34
M-120	LABORATORY/CHLORINE BUILDING MECHANICAL PLAN AND DETAILS	27 OF 34
E-121	ELECTRICAL SITE PLAN	28 OF 34
E-122	WASTEWATER TREATMENT PLANT ELECTRICAL SITE PLAN	29 OF 34
E-123	WASTEWATER TREATMENT PLANT GROUNDING PLAN	30 OF 34
E-124	LABORATORY/CHLORINE BUILDING ELECTRICAL POWER AND LIGHTING PLANS	31 OF 34
E-125	ELECTRIC BLOCK DIAGRAM AND POWER PANEL DETAIL	32 OF 34
E-126	WIRING DIAGRAMS	33 OF 34
REF-001	NYSDOT SANITARY DETAILS 1/17/85	34 OF 34

NOTE
SCALE REDUCTION
THESE REDUCED PLANS MAY NOT BE EXACTLY TO SCALE. ALL INDICATED SCALES ARE REDUCED TO APPROXIMATELY HALF SIZE.

0 1 2 3 4

CONTRACTOR'S NAME: .....
AWARD DATE: .....
COMPLETION DATE: .....
FINAL ACCEPTANCE DATE: .....
INSPECTION FIRM NAME: .....
RESIDENT ENG./EIC: .....
FINAL COST TOTAL: .....

FISCAL SHARE	COST(S)

INSPECTION FIRM CONSULTANT STAMP:

RECOMMENDED BY: DIRECTOR, OFFICE OF DESIGN — DATE 11/1/07

RECOMMENDED BY: DIRECTOR, NYSDOT REGION 8 — DATE 11.28.07

RECOMMENDED BY: DIVISION DIRECTOR — DATE 11/20/07

RECOMMENDED BY: TRAFFIC ENGINEER — DATE 6-4-07

RECOMMENDED BY: DIRECTOR, OFFICE OF CONSTRUCTION MANAGEMENT — DATE 6/4/07

RECOMMENDED BY: DIRECTOR OF MAINTENANCE AND OPERATIONS — DATE 12/19/07

APPROVED BY: CHIEF ENGINEER — DATE 12/19/07

PREPARED BY:
Bennett Fleming ENGINEERS, P.C.

SIGNATURE:
STATE OF NEW YORK · STEPHEN HADJIYANE · 066695 · LICENSED PROFESSIONAL ENGINEER

TANY 08-17A

TANY 08-17A

REVIEWED BY
THRUWAY AUTHORITY PROGRAM DIRECTOR
CONSULTANT PROJECT DESIGNER

SYMBOLS AND ABBREVIATIONS

EL	ELEVATION
℄ EL	CENTERLINE ELEVATION
INV EL	INVERT ELEVATION
WS EL	WATER SURFACE ELEVATION
T/	TOP
B/	BOTTOM
PE	PLAIN END
FLG	FLANGE
MJ	MECHANICAL JOINT
CI	CAST IRON
DI	DUCTILE IRON
PVC	POLY VINYL CHLORIDE
HEBV	HOSE END BALL VALVE
HS	HAND SWITCH
IL	INDICATING LIGHT
LAH	HIGH LEVEL ALARM
LAL	LOW LEVEL ALARM
LSH	HIGH LEVEL SWITCH
LSHH	HIGH HIGH LEVEL SWITCH
LSL	LOW LEVEL SWITCH
LSLL	LOW LOW LEVEL SWITCH
LT	LEVEL TRANSMITTER
PV	ECCENTRIC PLUG VALVE
CV	CHECK VALVE
BFV	BUTTERFLY VALVE
BV	BALL VALVE

Symbol	Meaning
A / 1	SECTION CUT LETTER DESIGNATION; SHEET UPON WHICH SECTION APPEARS
	REMOVAL OR ABANDONED
	AIR
	ELECTRICAL SIGNAL
	EXISTING
	PRIMARY PROCESS FLOW
	SECONDARY PROCESS FLOW
	SLUDGE FLOW
	GATE VALVE
N.C.	NORMALLY CLOSED VALVE
	PLUG VALVE
	CHECK VALVE
	BALL VALVE
	BUTTERFLY VALVE
200/ 300 GPM	AVERAGE/MAXIMUM FLOW
S	SOLENOID VALVE
	QUICK DISCONNECT
	PRESSURE RELIEF
FM	FLOW METER
V	BURIED VALVE
—98—	PROPOSED ELEVATION CONTOUR
—98—	EXISTING ELEVATION CONTOUR

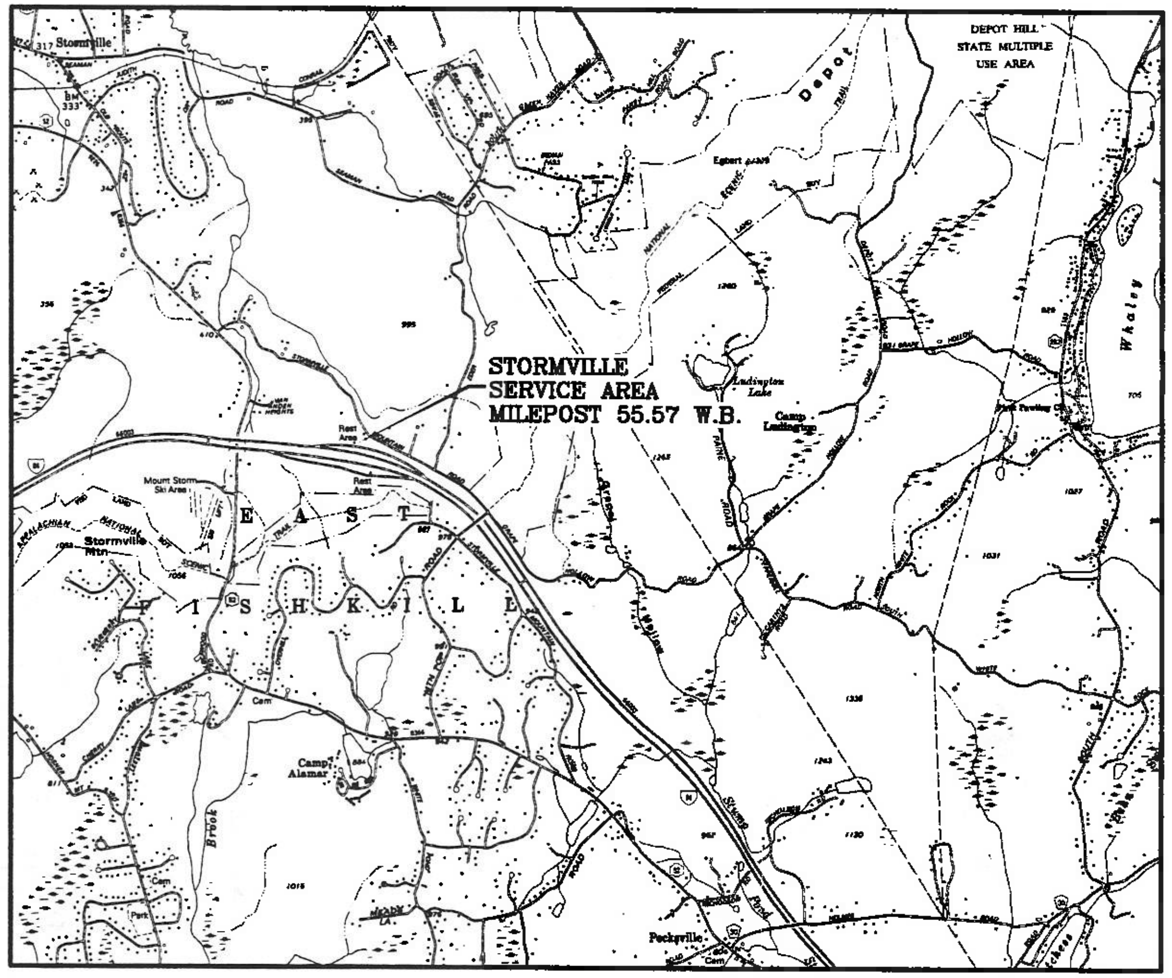

LOCATION MAP

N.T.S.

GENERAL NOTES:

1. THE PROJECT DESCRIPTIONS ARE GENERAL OUTLINES OF THE WORK AND SHALL NOT BE CONSTRUED AS COMPLETE DESCRIPTIONS OF THE WORK TO BE PERFORMED UNDER THIS CONTRACT. IN ADDITION, THE PROJECT DESCRIPTIONS DO NOT INDICATE THE CONSTRUCTION SEQUENCE.
2. THE WASTEWATER TREATMENT PLANT (WWTP) MUST REMAIN FULLY OPERATIONAL THROUGHOUT THE DURATION OF THIS CONTRACT. THE CONTRACTOR SHALL COORDINATE ALL WORK WITH THE THRUWAY AUTHORITY AND ENGINEER.
3. THE CONTRACTOR SHALL SUBMIT A DETAILED CONSTRUCTION SCHEDULE TO THE ENGINEER FOR APPROVAL WHICH ADHERES TO THE ENGINEERS CONSTRUCTION PHASING PLAN. THE PHASING PLAN SHALL INCLUDE A CONSTRUCTION SCHEDULE, CONSTRUCTION SEQUENCING AND DETAILED DESCRIPTIONS OF ALL TEMPORARY BYPASS PUMPING PROCEDURES. THE WWTP MUST CONTINUE TO MEET ALL SPDES REQUIREMENTS THROUGHOUT CONSTRUCTION. THE CONTRACTOR WILL WORK CLOSELY WITH THE THRUWAY PERSONNEL ASSOCIATED WITH THE OPERATION OF THE WWTP TO ENSURE THAT THE NYSDEC SPDES PERMIT CONDITIONS ARE MET DURING THIS PROJECT. IF THE ACTIONS OF THE CONTRACTOR LEAD TO VIOLATIONS OF THE PERMIT, THE CONTRACTOR WILL BE RESPONSIBLE FOR ALL COSTS INCURRED BY THE THRUWAY ASSOCIATED WITH THE PERMIT VIOLATION(S). SEE SPDES PERMIT IN SPECIFICATIONS. SEE MAINTENANCE OF OPERATIONS DURING CONSTRUCTION SECTION THIS DRAWING AND SPECIFICATION SECTION 01510 MAINTENANCE OF OPERATIONS DURING CONSTRUCTION.
4. PROVIDE THE ENGINEER, FOR REVIEW, WITH A SITE SPECIFIC HEALTH AND SAFETY PLAN, INCLUDING A CONFINED SPACE ENTRY PLAN.
5. TOPOGRAPHIC FEATURES AT THE WWTP ARE BASED ON A SURVEY PERFORMED BY THE NYSTA MARCH-APRIL 2005.
6. UTILITIES SHOWN ARE FROM RECORD DATA PROVIDED BY THE NEW YORK STATE THRUWAY AUTHORITY. NOT ALL RECORD PLANS WERE SUPPLIED WITH COMPLETE INFORMATION.
7. LOCATION OF ALL PIPING, STRUCTURES AND PROPERTY LINES ARE BASED ON THE BEST AVAILABLE INFORMATION AND ARE NOT WARRANTED TO BE EXACT. IT IS NOT WARRANTED THAT ALL ARE SHOWN. THE CONTRACTOR IS RESPONSIBLE FOR VERIFYING THE LOCATION OF, AND FOR THE PROTECTION OF EXISTING PIPING AND STRUCTURES.
8. SAW CUT (STRAIGHT LINE CUTS) AND REMOVE EXISTING ASPHALT CONCRETE PAVEMENT AND CONCRETE WHERE REQUIRED FOR THE INSTALLATION OF NEW PIPING. PAVEMENT AND CONCRETE SHALL BE REPLACED IN KIND.
9. IT WILL BE THE CONTRACTOR'S RESPONSIBILITY TO PROVIDE ALL NECESSARY FITTINGS AND ADAPTERS REQUIRED TO CONNECT TO DIFFERENT TYPES OF PIPING MATERIAL.
10. THRUST BLOCKS WILL BE USED FOR PIPE ANCHORAGE ON ALL HORIZONTAL AND VERTICAL BENDS.
11. THE CONTRACTOR SHALL BE RESPONSIBLE FOR LOCATING ALL SUBSURFACE UTILITIES AND SERVICES WITHIN THE LIMIT OF WORK. THE LOCATION OF EXISTING SUBSURFACE UTILITIES AND STRUCTURES SHOWN ON THE DRAWINGS ARE APPROXIMATE ONLY. THE CONTRACTOR SHALL VERIFY LOCATIONS IN THE FIELD.
12. THE MINIMUM COVER ON ALL PIPES SHALL BE 4'-0" UNLESS OTHERWISE SPECIFIED.
13. ALL VERTICAL BENDS MAY NOT BE SHOWN.
14. WHERE NEW PIPE IS LAID UNDER AN EXISTING PIPE OR UTILITY, SAND BACKFILL SHALL BE PROVIDED FOR THE FULL DISTANCE BETWEEN THE NEW PIPE AND EXISTING. WHERE CLEARANCE BETWEEN THE BOTTOM OF A NEW PIPE PASSING OVER THE TOP OF AN EXISTING PIPE IS LESS THAN A FOOT, THE ABOVE MENTIONED TREATMENT SHALL BE PROVIDED.
15. ALL DIMENSIONS AND EXISTING CONDITIONS SHALL BE FIELD VERIFIED BY THE CONTRACTOR.
16. DURING THE CONSTRUCTION PERIOD THE CONTRACTOR SHALL COORDINATE THEIR ACTIVITIES INCLUDING USE OF THE SITE TO MINIMIZE INTERFERENCES WITH THE ONGOING THRUWAY, NYSDOT, AND NYS POLICE OPERATIONS. CONTRACTORS ACTIVITIES ARE SUBJECT TO APPROVAL OF THE ENGINEER.
17. THE CONTRACTOR SHALL BE RESPONSIBLE FOR RESTORING THE SITE TO ITS ORIGINAL CONDITION.
18. THE CONTRACTORS ATTENTION IS DIRECTED TO THE FACT THAT NO SPOIL AREA IS AVAILABLE FOR THIS CONTRACT WITHIN THE THRUWAYS RIGHT-OF-WAY. THEREFORE, ALL SPOIL MATERIAL (INCLUDING WASTEWATER AND SLUDGE) REMOVED FROM THE JOB SITE SHALL BE DISPOSED OF, BY THE CONTRACTOR, OFF THE THRUWAY'S PROPERTY. THE CONTRACTOR SHALL COMPLY WITH ALL LOCAL, STATE AND FEDERAL REGULATIONS THAT APPLY TO THE AREA CHOSEN FOR THIS SPOIL MATERIAL. ALL COSTS ASSOCIATED WITH THE REMOVAL AND LAWFUL DISPOSAL OF SPOIL MATERIAL OFF THRUWAY PROPERTY SHALL BE INCLUDED IN THE BID.
19. THE THRUWAY AUTHORITY WILL DETERMINE LOCATIONS OF CONTRACTOR STAGING AREAS. THE SITE HAS LIMITED SPACE FOR PARKING, MATERIAL AND EQUIPMENT STORAGE.
20. CONTRACTOR IS DIRECTED TO CONTACT "DIG SAFELY NEW YORK", 1-800-962-7962, PRIOR TO STARTING WORK.
21. ALL CONTRACTOR ACTIVITIES ARE SUBJECT TO APPROVAL OF THE ENGINEER.
22. MAINTAIN AND PROTECT TRAFFIC DURING THE WORK. PROVIDE SUITABLE TRAFFIC CONTROLS AND TEMPORARY BARRICADES DURING THE CONSTRUCTION AS REQUIRED AND DIRECTED BY ENGINEER.
23. EXCAVATIONS WITHIN THE WASTEWATER TREATMENT PLANT THAT ARE LEFT OPEN AT THE END OF EACH WORK DAY ARE DISCOURAGED. IN THE EVENT THAT OPEN EXCAVATIONS ARE REQUIRED, PROVIDE HEAVY DUTY PLASTIC SECURITY FENCING TO PROTECT ALL OPEN EXCAVATIONS AS SPECIFIED. REFER TO SECTION 01500-TEMPORARY FACILITIES AND CONTROLS.

PROJECT DESCRIPTION

GENERAL

1. THIS PROJECT DESCRIPTION ALSO SERVES AS GENERAL SEQUENCE OF CONSTRUCTION. CONTRACTOR SHALL USE THIS AS A GUIDE WHILE DEVELOPING ITS CONSTRUCTION PHASING PLAN.

SANITARY SEWER SYSTEM

1. REPLACE SEWER PIPING AND MANHOLES AS INDICATED.
2. REMOVE BRUSH/TREES AS REQUIRED TO INSTALL NEW SEWER PIPING.
3. RESTORE DISTURBED AREAS TO PRECONSTRUCTION CONDITIONS.

WASTEWATER TREATMENT PLANT

1. REMOVE THE EXISTING FILTER BED NO. 3 PIPING. CAP COLLECTION PIPES AS REQUIRED TO ISOLATE FILTER BED NO. 3 FROM THE TWO OTHER BEDS.
2. PROVIDE AND INSTALL RBC INFLUENT MANHOLE.
3. CONSTRUCT CONCRETE TANK FOR RBC AND SPLITTER BOX.
4. PROVIDE AND INSTALL NEW RBC SYSTEM.
5. NOT USED.
6. PROVIDE AND INSTALL STEEL CLARIFIER.
7. CONSTRUCT CONCRETE CHLORINE CONTACT TANK.
8. PROVIDE AND INSTALL A FLOW METER IN THE CHLORINE CONTACT TANK AND LABORATORY/CHLORINE BUILDING.
9. PROVIDE AND INSTALL MANHOLE DOWNSTREAM OF CHLORINE CONTACT TANK.
10. PROVIDE AND INSTALL A RECIRCULATION/SLUDGE DUPLEX PUMPING STATION AND VALVE CHAMBER. PROVIDE AND INSTALL NEW PUMPS AND LEVEL CONTROL FLOATS.
11. PROVIDE AND INSTALL ALL YARD PIPING AS SHOWN AND REQUIRED FOR A COMPLETE AND OPERATIONAL TREATMENT SYSTEM.
12. ABANDON THE EXISTING DOSING TANK IN PLACE. REMOVE AND DISPOSE OF EXISTING EQUIPMENT IN DOSING TANK. CUT AND CAP PIPES OUTSIDE DOSING TANK.
13. REMOVE AND DISPOSE OF THE VALVE CHAMBER.
14. CONSTRUCT THE LABORATORY/CHLORINE BUILDING AS SHOWN.
15. CONSTRUCT AN ACCESS ROAD AS SHOWN.
16. PROVIDE AND INSTALL WASTEWATER TREATMENT PLANT POWER FROM THE EXISTING CENTRAL HUDSON GAS & ELECTRIC TRANSFORMER AND CT CABINET AS SHOWN.
17. PROVIDE AND INSTALL POTABLE WATER LINE AND TELEPHONE CONDUIT FROM THE SERVICE AREA TO THE LABORATORY BUILDING.
18. PROVIDE AND INSTALL ALL CONDUIT, WIRING AND CONTROLS AS SHOWN AND AS REQUIRED FOR A COMPLETE AND OPERATIONAL SYSTEM.
19. CONSTRUCT DRAINAGE SWALES AS SHOWN.
20. PROVIDE AND INSTALL SITE FENCING AS SHOWN.
21. PROVIDE, INSTALL AND MAINTAIN EROSION AND SEDIMENT CONTROL DEVICES AS SHOWN AND AS REQUIRED TO CONTAIN SEDIMENT ON SITE.
22. REGRADE THE SITE AS SHOWN.

MAINTENANCE OF OPERATIONS DURING CONSTRUCTION

1. CONSTRUCT CONCRETE RBC TANK, INSTALL RBC, CLARIFIER, CHLORINE CONTACT TANK, DUPLEX PUMPING STATION AND ALL ASSOCIATED PIPING, VALVES AND APPURTENANCES. DURING THIS WORK, SAND FILTER BEDS NO. 1 AND NO. 2 WILL CONTINUE TO OPERATE. THE CONTRACTOR IS RESPONSIBLE FOR PROVIDING ALL NECESSARY TEMPORARY PUMPS, PIPING, VALVES ETC TO KEEP BOTH SAND FILTER BEDS IN OPERATION UNTIL THE NEW TREATMENT SYSTEM IS OPERATIONAL AND ACCEPTED BY THE AUTHORITY.
2. CONSTRUCT SANITARY SEWER SYSTEM MODIFICATIONS.
3. DESIGN, PROVIDE, INSTALL, OPERATE, MAINTAIN, AND POWER TEMPORARY PUMPING AS REQUIRED DURING THE WORK. SUBMIT A BYPASS OPERATIONS PLAN PRIOR TO ANY BYPASS WORK.
4. THE CONTRACTOR MAY ELECT TO PUMP OUT THE SEPTIC TANKS AS NEEDED INSTEAD OF BYPASSING. COORDINATE PUMP OUT ACTIVITY WITH THE NEW YORK STATE THRUWAY AUTHORITY. IT IS THE CONTRACTOR'S RESPONSIBILITY TO MONITOR WATER LEVEL IN THE VARIOUS SEPTIC TANKS AND PROVIDE DOCUMENTATION OF PROPER DISPOSAL.
5. THE RBC MUST BE STARTED IN ACCORDANCE WITH THE MANUFACTURER'S RECOMMENDATIONS. SEE SPECIFICATIONS FOR MINIMUM START UP REQUIREMENTS.

TYPE OF PROJECT: ARCHITECTURAL PROJECT REQUIRING LABOR AND MATERIALS FOR THE REHABILITATION OF WASTEWATER TREATMENT PLANT

STANDARD SHEETS: NONE

CODE COMPLIANCE: ALL WORK DESCRIBED IN AND TO BE DONE UNDER THIS CONTRACT SHALL CONFORM TO THE NEW YORK STATE UNIFORM FIRE PREVENTION AND BUILDING CODE (19 NYCRR) AND ITS REFERENCE STANDARDS.

BUILDING CLASSIFICATIONS: OCCUPANCY CLASSIFICATION: GROUP U
CONSTRUCTION CLASSIFICATION: TYPE 5b

NOTE
SCALE REDUCTION
THESE REDUCED PLANS MAY NOT BE EXACTLY TO SCALE. ALL INDICATED SCALES ARE REDUCED TO APPROXIMATELY HALF SIZE.
0 1 2 3 4

Gannett Fleming ENGINEERS, P.C.
LOCUST VALLEY, NY HARRISBURG, PA

STATE OF NEW YORK · STEPHEN HADJIYANE · LICENSED PROFESSIONAL ENGINEER · 066695

DATE	DESCRIPTION	BY	SYM.
11/07	GENERAL REVISIONS	SH	2
5/07	GENERAL REVISIONS	SH	1
4/07	REG. SUBMISSION	SH	0

REVISIONS

NEW YORK STATE THRUWAY AUTHORITY
DEPARTMENT OF ENGINEERING SERVICES
200 SOUTHERN BLVD., ALBANY, N.Y. 12209

TITLE OF PROJECT: REHABILITATION OF THE WASTEWATER TREATMENT PLANT
LOCATION OF PROJECT: STORMVILLE SERVICE AREA M.P. 55.57 W.B.
TITLE OF DRAWING: LOCATION PLAN, GENERAL NOTES SYMBOLS AND ABBREVIATIONS

NEW YORK STATE THRUWAY AUTHORITY

CONTRACT NUMBER: TANY 08-17A
DATE: 4/23/07
DRAWING NUMBER: G-001

CHECKED BY:
DRAFTED BY: M. Doherty
DESIGNED BY:
IN CHARGE OF:
12/31/07 1:36pm FILE= K:\PROJECTS\44000's\44891\001 (stormville)\design\G-001-location plan.dwg by LAWSON XREFs=

GENERAL STRUCTURAL NOTES

A. GENERAL

1. THE STRUCTURE IS DESIGNED TO ACT AS A STRUCTURAL UNIT UPON COMPLETION. DESIGN AND PROVIDE NECESSARY BRACING, TEMPORARY SUPPORTS, AND SHORING TO RESIST FORCES, INCLUDING UPLIFT, ON THE STRUCTURE DURING CONSTRUCTION.
2. WORK SHALL BE COORDINATED WITH THE VARIOUS TRADES TO AVOID CONFLICT OR INTERFERENCE WITH REINFORCING STEEL OR STRUCTURAL STEEL MEMBERS.
3. THE LOCATION OF ALL UNDERGROUND UTILITIES SHALL BE IDENTIFIED IN THE FIELD BEFORE CONSTRUCTION COMMENCES.

B. DESIGN CRITERIA

1. BUILDING CODE ..... NEW YORK STATE UNIFORM FIRE PREVENTION AND BUILDING CODE (19NYCRR) AND ITS REFERENCED STANDARDS

2. DESIGN LIVE LOADS

A. ROOF SNOW LOADS
a. GROUND SNOW LOAD ..... 55 PSF

B. FLOOR LOADS
a. OFFICE ..... 100 PSF
b. MECHANICAL/ELECTRICAL ROOMS ..... 150 PSF
c. WALKWAYS ..... 100 PSF

C. WIND EXPOSURE CATEGORY C & WIND SPEED ..... 95 MPH

D. SEISMIC ..... Av = 0.05, CATEGORY C

C. CONCRETE

1. ALL CONCRETE FOR STRUCTURES SHALL BE AIR-ENTRAINED CONCRETE WITH A MINIMUM COMPRESSIVE STRENGTH OF 4000 POUNDS PER SQUARE INCH AT 28 DAYS.
2. REINFORCEMENT BARS SHALL BE GALVANIZED STEEL CONFORMING TO A.S.T.M. A615, GRADE 60, DEFORMED AND TO A.S.T.M. A767.
3. WELDED WIRE FABRIC SHALL CONFORM TO A.S.T.M. DESIGNATION A185.
4. WATERSTOPS SHALL BE POLYVINYL CHLORIDE, 6"X3/8" IN CONSTRUCTION JOINTS AND 9"X3/8" W/CENTER BULB IN EXPANSION JOINTS UNLESS SHOWN OTHERWISE.
5. CONCRETE DESIGN IS IN CONFORMANCE WITH "BUILDING CODE REQUIREMENTS FOR REINFORCED CONCRETE" (A.C.I. 318-99) EXCEPT AS MODIFIED BY RECOMMENDATIONS OF A.C.I. COMMITTEE 350 REPORT ON "ENVIRONMENTAL ENGINEERING CONCRETE STRUCTURES" FOR WATER BEARING STRUCTURES.
6. DETAIL, FABRICATE AND ERECT REINFORCEMENT BARS, INCLUDING BAR SUPPORTS, SPACERS, ETC. IN ACCORDANCE WITH "DETAILS AND DETAILING OF CONCRETE REINFORCEMENT." (A.C.I. 315-92)
7. UNLESS SHOWN OTHERWISE, BARS AT SPLICES SHALL BE LAPPED IN ACCORDANCE WITH THE TABLE "REINFORCING STEEL LAP SPLICES AND EMBEDMENTS" SHOWN ON THIS SHEET.

REINFORCING STEEL LAP SPLICES AND EMBEDMENTS

BAR SIZE	MIN. LAP SPLICE LENGTH (INCHES)		MIN. EMBEDMENT LENGTH (INCHES)	
	TOP BARS	OTHER BARS	TOP BARS	OTHER BARS
3	15	12	12	12
4	20	15	15	12
5	29	23	23	17
6	40	31	31	24
7	43	33	33	25
8	49	37	37	29
9	60	46	46	36
10	74	57	57	44
11	89	68	68	53

NOTES:
1. TABLE BASED ON A.C.I. 318-99 WITH F'C = 4,000 P.S.I. AND FY = 60,000 P.S.I.
2. TOP BARS ARE HORIZONTAL BARS WITH MORE THAN 12 INCHES DEPTH OF CONCRETE CAST BELOW THE REINFORCEMENT.
3. HORIZONTAL WALL REINFORCEMENT IS CONSIDERED A TOP BAR.

8. NO MATERIAL OR CONSTRUCTION METHOD SHALL BE USED WHICH WILL ADD TASTE, ODOR OR TOXICITY TO THE WATER SUPPLY.
9. CONCRETE COVER FOR REINFORCEMENT BARS SHALL CONFORM TO THE FOLLOWING, UNLESS INDICATED OTHERWISE ON THE DRAWINGS:

A. UNFORMED SURFACES IN CONTACT WITH GROUND ..... 3 INCHES

B. FORMED SURFACES IN CONTACT WITH GROUND OR EXPOSED TO WEATHER, AND ALL WALLS ..... 2 INCHES

C. ALL COLUMNS, BEAMS ..... 1-1/2 INCHES

D. EXTERIOR EXPOSURE, TOP OF SLABS ..... 1-1/2 INCHES

E. UNDERSIDE OF SLABS EXPOSED TO WATER ..... 1-1/2 INCHES

F. INTERIOR EXPOSURE TOP AND BOTTOM OF SLABS ..... 1 INCH

G. TOP OF SLABS EXPOSED TO WATER ..... 2 INCHES

10. CHAMFER EXPOSED CONCRETE EDGES 3/4 INCH X 3/4 INCH UNLESS NOTED OTHERWISE
11. CHAMFER EDGES UNDER ALL EXTERIOR MASONRY WALLS 3/4 INCH X 3/4 INCH.
12. CONCRETE PADS FOR ALL EQUIPMENT SHALL BE PROVIDED UNDER THIS CONTRACT, WHETHER INDICATED OR NOT ON DRAWINGS.
13. LATERAL LOADS SHALL NOT BE APPLIED TO ANY WALL PRIOR TO ACHIEVING THE 28 DAY CONCRETE COMPRESSIVE STRENGTH. ALL SUPPORTING FLOORS AND SLABS AT TOP OF WALLS MUST ALSO BE IN PLACE.
14. FOR LOCATION OF FLOOR DRAINS, SEE MECHANICAL DRAWINGS. SLOPE FLOOR TO DRAIN.

D. FOUNDATIONS

1. SEE SPECIFICATION SECTION 02220 FOR FOUNDATION PREPARATION.
2. FOR SHORING AND DEWATERING REQUIREMENTS SEE SPECIFICATION SECTION 02151 AND SECTION 02240.

ABBREVIATIONS

ADDL	ADDITIONAL	EF	EACH FACE	NO	NUMBER
ALT	ALTERNATE	EL	ELEVATION	OPNG	OPENING
AL	ALUMINUM	EMBED	EMBEDMENT	OD	OUTSIDE DIAMETER
APPROX	APPROXIMATELY	EQ	EQUAL	OF	OUTSIDE FACE
ARCH	ARCHITECTURAL	EQUIP	EQUIPMENT	PL	PLATE
BETW	BETWEEN	EXIST	EXISTING	PVC	POLYVINYL CHLORIDE
BM	BEAM	EXP	EXPANSION	R	RADIUS
BRG	BEARING	EW	EACH WAY	REINF	REINFORCEMENT
BOT	BOTTOM	FRP	FIBERGLASS REINFORCED PLASTIC	REQD	REQUIRED
C/C	CENTER TO CENTER	FTG	FOOTING	SH	SHEET
CHKD	CHECKERED	H	HIGH	SIM	SIMILAR
CIR	CIRCULAR	HPT	HIGH POINT	SPA	SPACE
℄	CENTERLINE	ID	INSIDE DIAMETER	SQ	SQUARE
CLR	CLEAR	IF	INSIDE FACE	SS	STAINLESS STEEL
COL	COLUMN	INV	INVERT	STIFF	STIFFENER
CONC	CONCRETE	JT	JOINT	STL	STEEL
CONN	CONNECTION	LAND	LANDING	SYMM	SYMMETRICAL
CMU	CONCRETE MASONRY UNIT	LG	LONG	T/	TOP OF
CONSTR	CONSTRUCTION	LLV	LONG LEG VERTICAL	TYP	TYPICAL
CONTR	CONTRACTION	LPT	LOW POINT	UNO	UNLESS NOTED OTHERWISE
DET	DETAIL	MFR	MANUFACTURER	WWF	WELDED WIRE FABRIC
DIA	DIAMETER	MATL	MATERIAL	W	WIDE
DN	DOWN	MAX	MAXIMUM	WF	WIDE FLANGE
DWGS	DRAWINGS	MIN	MINIMUM	W/	WITH
EA	EACH	NTS	NOT TO SCALE		

NOTE
SCALE REDUCTION
THESE REDUCED PLANS MAY NOT BE EXACTLY TO SCALE. ALL INDICATED SCALES ARE REDUCED TO APPROXIMATELY HALF SIZE.

0 1 2 3 4

Gannett Fleming
ENGINEERS, P.C.
LOCUST VALLEY, NY HARRISBURG, PA

STATE OF NEW YORK · STEPHEN HADJYANNIS · 086695 · LICENSED PROFESSIONAL ENGINEER

DATE	DESCRIPTION	BY	SYM.
11/07	GENERAL REVISIONS	SH	2
5/07	GENERAL REVISIONS	SH	1
4/07	REG. SUBMISSION	SH	0

REVISIONS

NEW YORK STATE THRUWAY AUTHORITY
DEPARTMENT OF ENGINEERING SERVICES
200 SOUTHERN BLVD., ALBANY, N.Y. 12209

TITLE OF PROJECT
REHABILITATION OF THE WASTEWATER TREATMENT PLANT

LOCATION OF PROJECT
STORMVILLE SERVICE AREA
M.P. 55.57 W.B.

TITLE OF DRAWING
GENERAL STRUCTURAL NOTES

NEW YORK STATE THRUWAY AUTHORITY

CONTRACT NUMBER: TANY 08-17A
DATE: 4/23/07
DRAWING NUMBER: G-002

IN CHARGE OF: DESIGNED BY: DRAFTED BY: M. Dehaty CHECKED BY:
12/31/07 1:12pm FILE= R:\PROJECTS\44000's\44999\001 (stormville)\design\G-002_Gen struct notes.dwg by LUNDSN XREF(S)=TITLE

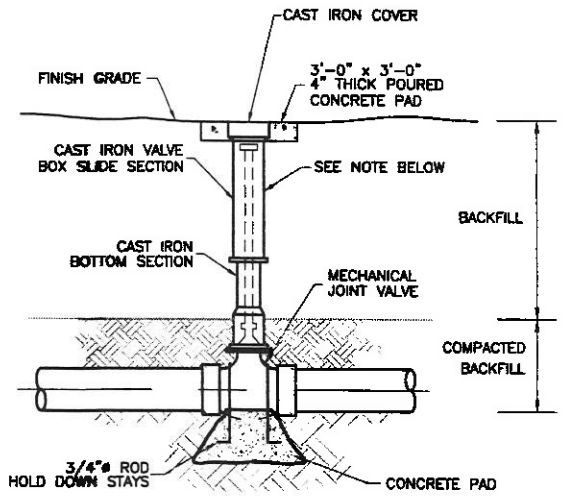

NOTE
EXTENSION ROD W/2" OPERATING NUT 6" BELOW GRADE REQUIRED WHEN VALVE OPERATING NUT IS 4'-0" BELOW GRADE OR GREATER

BURIED VALVE DETAIL

N.T.S.

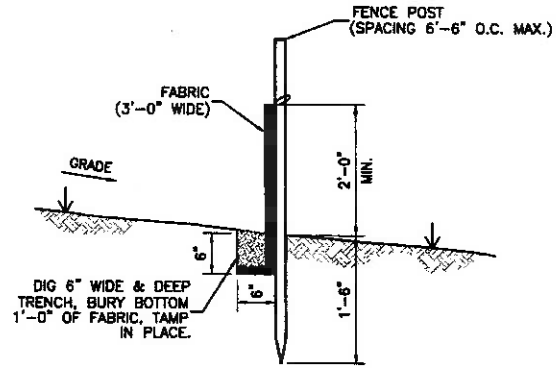

SILT FENCE DETAIL

N.T.S.

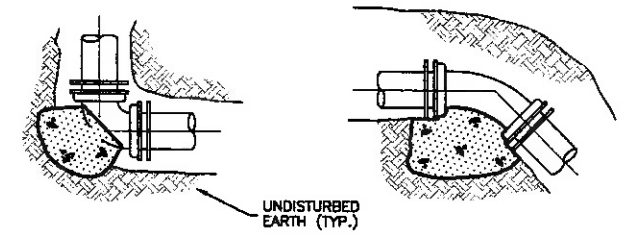

BEND

DOWN BEND

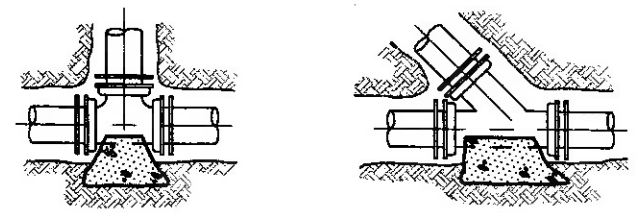

TEE

WYE

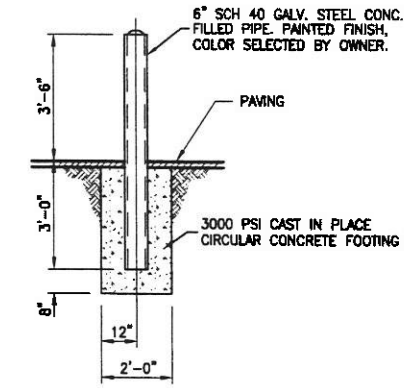

BOLLARD DETAIL

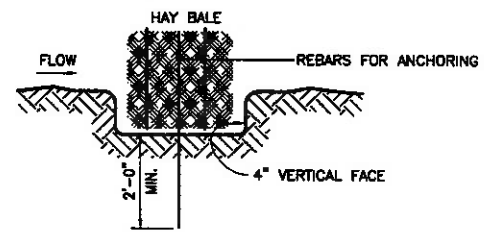

TYPICAL EMBEDDING DETAIL

CONCRETE THRUST BLOCK SCHEDULE								
LINE SIZE	BEARING AREA OF THRUST BLOCKS (FT^2)				VOLUME OF THRUST BLOCKS FOR VERTICAL DOWNBENDS (YD^3)			
	90	45	TEE, WYE PLUG CAP	VALVES	90	45	22 1/2	11 1/4
4	.7	.4	.5	.5	–	–	–	–
8	2.3	1.2	1.6	1.6	.8	.4	–	–

THRUST BLOCK DETAILS

N.T.S

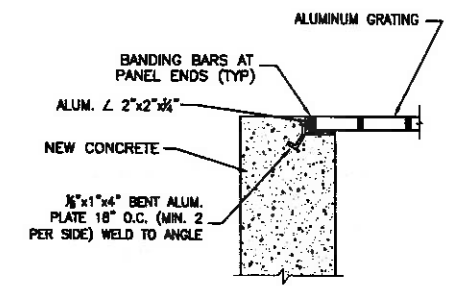

NEW ACCESS COVER MOUNTING DETAIL

NTS

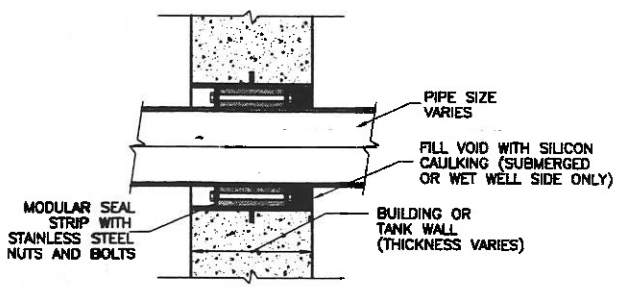

NOTES:
1. MODULAR SEAL STRIP SHALL BE PLACED SO THAT BOLTS CAN BE ADJUSTED DURING NORMAL OPERATION.
2. WALLS 12" OR LARGER IN THICKNESS SHALL REQUIRE 2 MODULAR SEAL STRIPS.

TYPICAL PIPE PENETRATION THROUGH WALL

N.T.S.

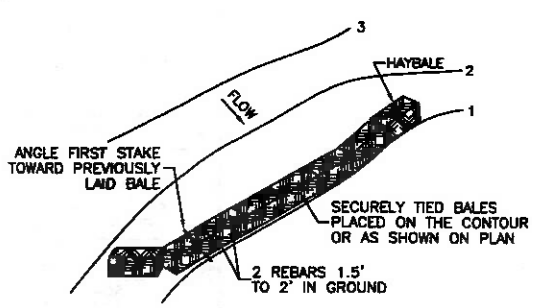

TYPICAL PLACEMENT AND ANCHORING DETAIL

BALE SEDIMENT BARRIERS

N.T.S.

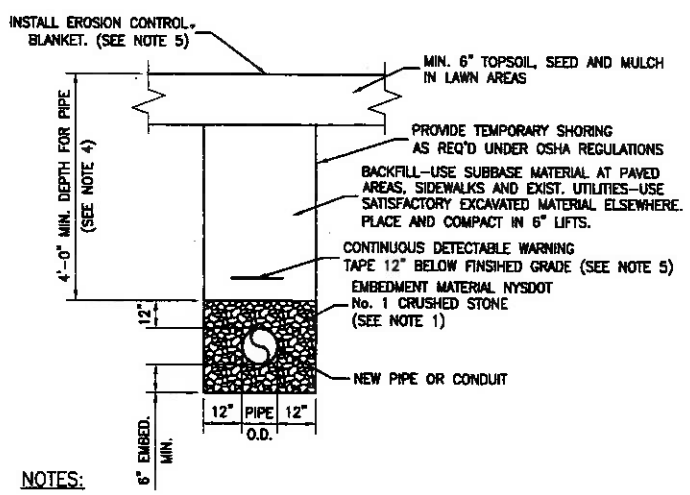

NOTES:

1. EMBEDMENT MATERIAL SHALL BE SAND WITH PVC AND COPPER PIPE.
2. COORDINATE WARNING TAPES WITH DIG SAFE UTILITY DESIGNATIONS.
3. THIS DETAIL APPLIES TO ALL UTILITIES, EXCEPT FOR ELECTRICAL. SEE DRAWING G-005 FOR ELECTRICAL TRENCH DETAIL.
4. DEPTH MAY BE SHALLOWER ONLY FOR GRAVITY PIPES WITH DESIGN INVERT ELEVATIONS.
5. INSTALL NORTH AMERICAN GREEN S75 SINGLE NET STRAW BLANKET ON ALL TRENCHES. OVERLAP EXCAVATION MIN. 2 FOOT (TYP.)

TYPICAL UTILITY TRENCH

N.T.S.

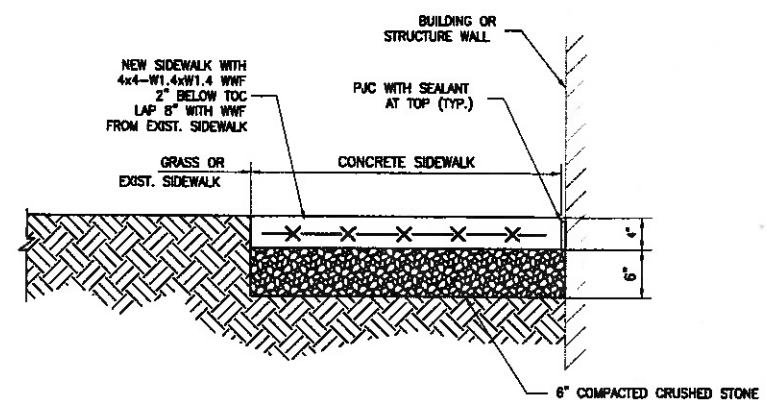

NEW SIDEWALK REPLACEMENT DETAIL

(USE FOR ALL NEW OR REPAIR CONDITIONS)
NO SCALE

NOTE
SCALE REDUCTION
THESE REDUCED PLANS MAY NOT BE EXACTLY TO SCALE. ALL INDICATED SCALES ARE REDUCED TO APPROXIMATELY HALF SIZE.

0 1 2 3 4

Gannett Fleming ENGINEERS, P.C.
LOCUST VALLEY, NY HARRISBURG, PA

STATE OF NEW YORK · STEPHEN HADJIYANE · 086695 · LICENSED PROFESSIONAL ENGINEER

DATE	DESCRIPTION	BY	SYM.
11/07	GENERAL REVISIONS	SH	2
5/07	GENERAL REVISIONS	SH	1
4/07	REG. SUBMISSION	SH	0

REVISIONS

NEW YORK STATE THRUWAY AUTHORITY
DEPARTMENT OF ENGINEERING SERVICES
200 SOUTHERN BLVD., ALBANY, N.Y. 12209

TITLE OF PROJECT
REHABILITATION OF THE WASTEWATER TREATMENT PLANT

LOCATION OF PROJECT
STORMVILLE SERVICE AREA
M.P. 55.57 W.B.

TITLE OF DRAWING
MISCELLANEOUS DETAILS I

NEW YORK STATE THRUWAY AUTHORITY

CONTRACT NUMBER: TANY 08-17A
DATE: 4/23/07
DRAWING NUMBER: G-003

DESIGNED BY: Eric Fel
DRAFTED BY: M. Dekatz
CHECKED BY: Peter Brownell
IN CHARGE OF: Steven Hadjiyane

12/31/70 11:3pm FILE= R:\PROJECTS\14000's\14999\001 (stormville)\design\G-003-misc Details 1.dwg by LANSON XREF=

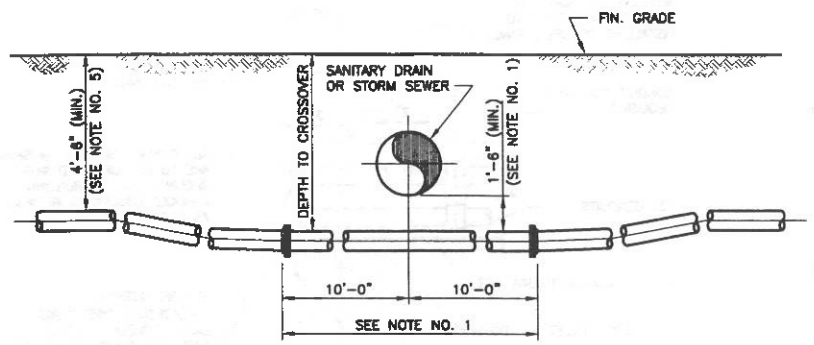

NOTES

1. WATER MAINS CROSSING SANITARY OR STORM SEWERS SHALL BE LAID TO PROVIDE A MINIMUM VERTICAL DISTANCE OF 18 INCHES BETWEEN THE OUTSIDE OF THE SEWER OR STORM DRAIN AND THE OUTSIDE OF THE WATER MAIN. THIS SHALL BE THE CASE WHERE THE WATER MAIN IS EITHER ABOVE OR BELOW THE SEWER. AT CROSSINGS, ONE FULL LENGTH OF WATER PIPE SHALL BE LOCATED SO BOTH JOINTS WILL BE AS FAR FROM THE SEWER AS POSSIBLE.
2. THE WATER MAIN SHALL BE LAID TO PROVIDE A MINIMUM HORIZONTAL DISTANCE OF 10 FEET BETWEEN THE OUTSIDE OF THE SEWER AND THE OUTSIDE OF THE WATER MAIN.
3. ALL JOINTS SHALL BE RESTRAINED. USE 4-3/4" DIA. TIE RODS FOR EACH JOINT.
4. AT PIPE CROSSING, BACKFILL WITH SAND TO 1'-0" ABOVE HIGHEST PIPE.
5. UNLESS OTHERWISE SHOWN ON THE CONTRACT DRAWINGS OR SPECIFIED, WATER MAINS SHALL BE INSTALLED TO SUCH DEPTH TO GIVE A MINIMUM OF 4'-6" OF COVER ON THE WATER MAIN. AT 4'-0" MINIMUM COVER WILL BE PERMITTED FOR SPECIAL CONDITIONS WHEN APPROVED BY ENGINEER.

TYPICAL PIPE CROSSING DETAIL

NTS

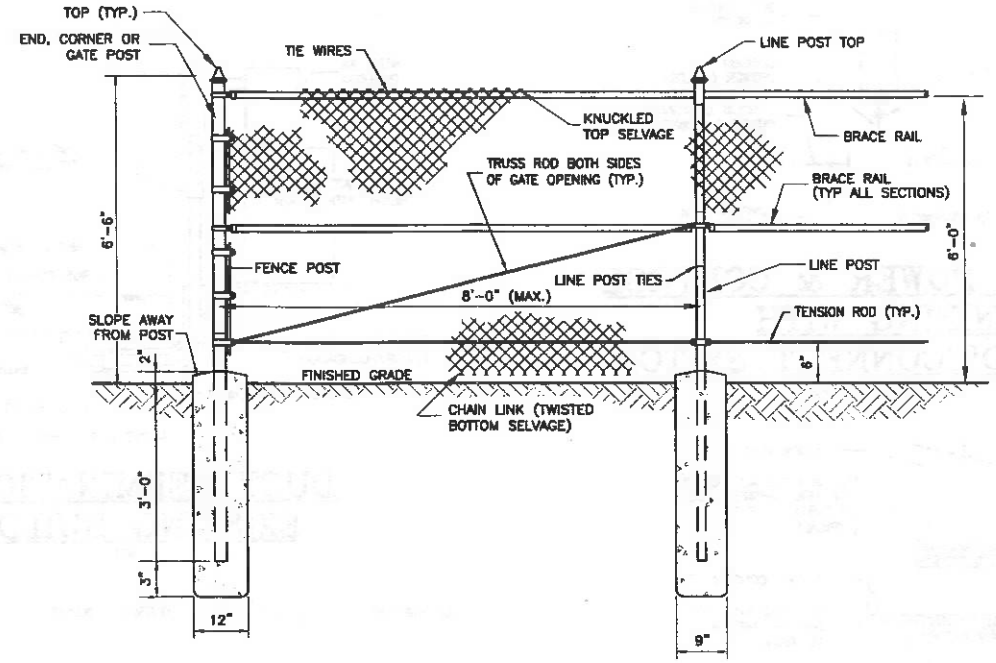

CHAIN LINK FENCE DETAIL

NTS

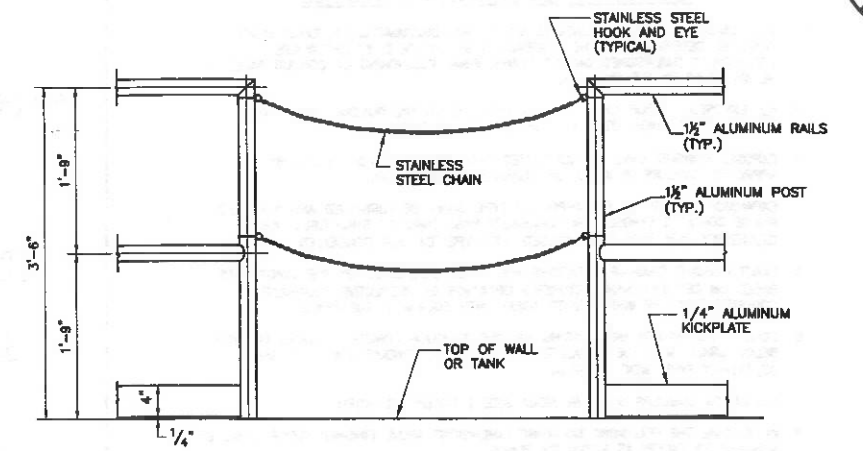

ALUMINUM HANDRAIL/CHAIN GUARD DETAIL

NTS

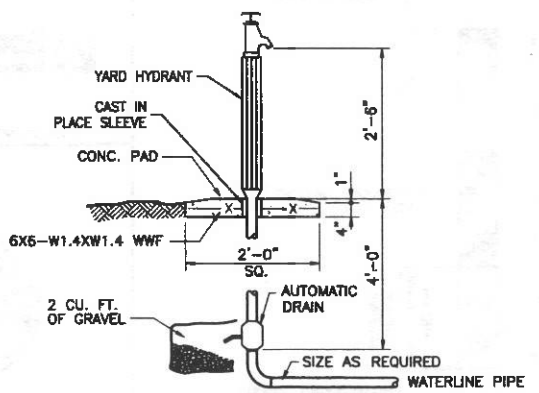

YARD HYDRANT DETAIL

NTS

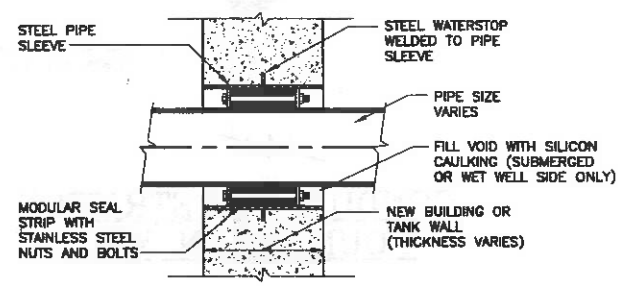

NOTES:
1. MODULAR SEAL STRIP SHALL BE PLACED SO THAT BOLTS CAN BE ADJUSTED DURING NORMAL OPERATION.
2. WALLS 12" OR LARGER IN THICKNESS SHALL REQUIRE 2 MODULAR SEAL STRIPS.

TYPICAL PIPE PENETRATION THRU FOUNDATION WALL

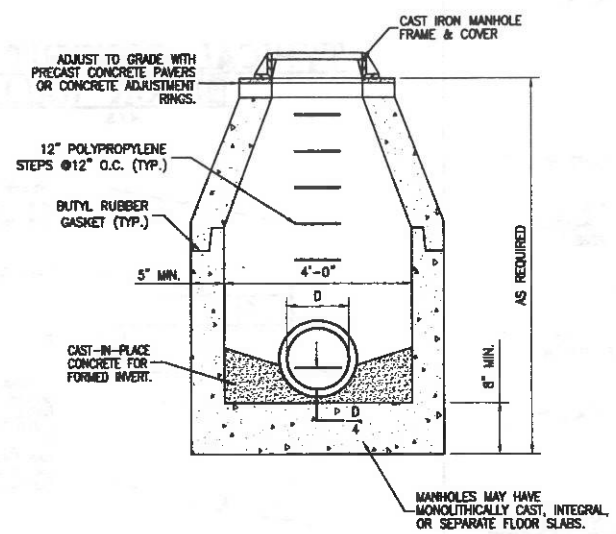

PRECAST ROUND MANHOLE DETAIL

NTS

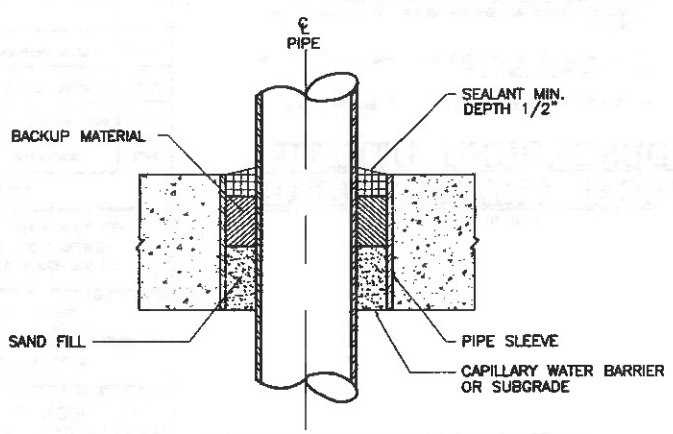

PIPE SLEEVE THROUGH CONCRETE FLOOR SLAB ON GRADE WITHOUT WATERPROOFING MEMBRANE

PIPE PENATRATION THRU FLOOR SLAB

N.T.S.

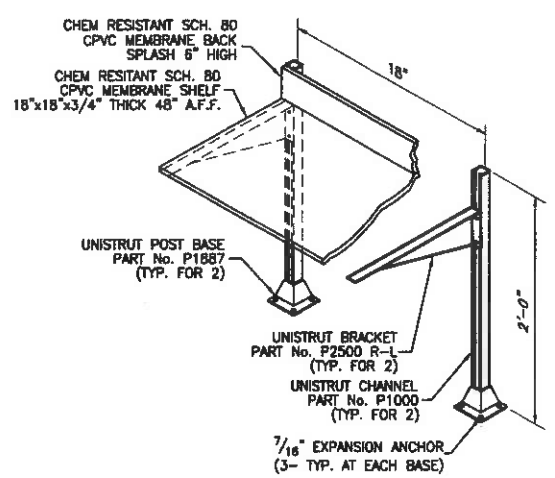

METERING PUMP SHELF DETAIL

N.T.S.

NOTE
SCALE REDUCTION

THESE REDUCED PLANS MAY NOT BE EXACTLY TO SCALE. ALL INDICATED SCALES ARE REDUCED TO APPROXIMATELY HALF SIZE.

0 1 2 3 4

Gannett Fleming
ENGINEERS, P.C.

LOCUST VALLEY, NY HARRISBURG, PA

STATE OF NEW YORK · STEPHEN HADJYANNIS · 086995 · LICENSED PROFESSIONAL ENGINEER

DATE	DESCRIPTION	BY	SYM.
11/07	GENERAL REVISIONS	SH	2
5/07	GENERAL REVISIONS	SH	1
4/07	REG. SUBMISSION	SH	0

REVISIONS

NEW YORK STATE THRUWAY AUTHORITY
DEPARTMENT OF ENGINEERING SERVICES
200 SOUTHERN BLVD., ALBANY, N.Y. 12209

TITLE OF PROJECT
REHABILITATION OF THE WASTEWATER TREATMENT PLANT

LOCATION OF PROJECT
STORMVILLE SERVICE AREA
M.P. 55.57 W.B.

TITLE OF DRAWING
MISCELLANEOUS DETAILS II

NEW YORK STATE THRUWAY AUTHORITY

CONTRACT NUMBER: TANY 08-17A
DATE: 4/23/07
DRAWING NUMBER: G-004

DRAFTED BY: M. Doherty
DESIGNED BY: Eric Fel
CHECKED BY: John Brownlee
IN CHARGE OF: Stephen Hadjyannis
12/31/07 11:3am FILE= K:\PROJECTS\44000's\44995\001 (stormville)\design\G-004-Misc Details 1.dwg by LAWSON, JERRY.

GENERAL ELECTRICAL NOTES

1. ALL POWER AND LIGHTING CONDUITS ARE SHOWN DIAGRAMATICALLY. EXACT RUNS SHALL BE DETERMINED BY THE CONTRACTOR IN THE FIELD, EXCEPT WHERE SPECIFICALLY DIMENSIONED ON THE PLANS. FINAL POSITIONING OF CONDUIT RUNS TO BE APPROVED BY THE ENGINEER.
2. ALL EXPOSED CONDUIT SHALL BE RUN PARALLEL TO THE BUILDING WALLS AND BEAMS EXCEPT WHERE OTHERWISE SHOWN ON THE PLANS.
3. EXPOSED CONDUIT SHALL BE SUPPORTED FROM WALLS AND/OR CEILING BY APPROVED HANGERS OF ANGLE OR CHANNEL CONSTRUCTION.
4. EXPANSION FITTINGS OF THE APPROVED TYPE SHALL BE FURNISHED AND INSTALLED WHERE CONDUITS EXPOSED OR CONCEALED PASS THROUGH STRUCTURAL JOINTS. OZ/GEDNEY TYPE 'DXX' FOR EXPOSED AND TYPE 'DX' FOR CONCEALED OR EQUAL.
5. EXACT CONDUIT STUB-UP LOCATIONS ARE TO BE DETERMINED BY THE CONTRACTOR BASED ON CERTIFIED MANUFACTURER'S DRAWINGS OF RESPECTIVE EQUIPMENT. CONDUITS SHALL BE INSTALLED TO AGREE WITH EQUIPMENT FURNISHED.
6. CONDUIT FOR POWER AND LIGHTING PASSING THROUGH CONCRETE FLOORS OR WALLS BELOW GRADE SHALL BE INSTALLED WITH APPROVED CONDUIT SEALING FITTINGS. OZ/GEDNEY TYPE 'WSK' OR EQUAL.
7. ALL MOTOR STARTERS SHALL BE NEMA SIZE 1 EXCEPT AS NOTED.
8. IN GENERAL THE FOLLOWING MOUNTING DIMENSIONS ABOVE FINISHED FLOOR SHALL BE ADHERED TO EXCEPT AS NOTED ON PLANS.
   OFFICE RECEPTACLES = 1'-6"
   LAB RECEPTACLES = DETERMINED BY ENGINEER IN FIELD
   PROCESS RECEPTACLES = 4'-0"
   LIGHTING SWITCHES, DISCONNECT SWITCHES AND MANUAL MOTOR STARTERS = 4'-6"
9. ALL PANEL BOARD CIRCUIT BREAKERS SHALL BE RATED AT 20 AMPS UNLESS OTHERWISE NOTED.
10. ALL POWER AND LIGHTING CONDUITS SHALL BE 3/4" WITH 3#12 AWG. (1-HOT 1-NEUTRAL, 1-GROUND) UNLESS NOTED OTHERWISE.
11. NOT USED
12. FOR ABBREVIATIONS AND ADDITIONAL NOTES AND SYMBOLS SEE ELECTRICAL SPECIFICATIONS.
13. ALL ELECTRICAL WORK SHALL CONFORM TO THE NATIONAL ELECTRIC CODE NFPA 70 (NEC) AS WELL AS THE NEW YORK STATE UNIFORM FIRE PREVENTION AND BUILDING CODE (19NYCRR) AND ITS REFERENCED STANDARDS.
14. CONTRACTOR SHALL MOUNT DISCONNECT SWITCHES, MOTOR STARTERS AND CONTROL PANELS ON KINDORF CHANNEL STAND.
15. ALL OUTDOOR ENCLOSURES INCLUDING WIREWAY SHALL BE TYPE NEMA 4X.
16. ALL COMPONENTS OF THE SYSTEM SHALL BE PROPERLY GROUNDED.
17. CONTRACTOR SHALL FURNISH AND INSTALL ALL ELECTRICAL EQUIPMENT REQUIRED TO PROVIDE A COMPLETE SYSTEM IN WORKING ORDER.
18. CONTRACTOR SHALL FURNISH AND INSTALL ALL ELECTRIC WIRE AND CABLE FOR ALL ELECTRICAL EQUIPMENT AND ALL INTERCONNECTING WIRES FOR COMPONENTS PROVIDED UNDER ALL SECTIONS OF THIS CONTRACT. ALL WIRE AND CABLE ON THIS PROJECT SHALL BE COPPER.
19. ALL INSTALLATION METHODS TO BE APPROVED BY THE ENGINEER PRIOR TO IMPLEMENTATION.
20. ALL WIRING RUN IN CONDUIT WITHIN EXISTING BUILDING TO BE RUN WITHIN 12" OF EXISTING CEILING WITH VERTICAL DROPS TO ELECTRICAL DEVICES OR AS DIRECTED BY ENGINEER.
21. ALL ELECTRICAL WORK SHALL COMPLY WITH CHAPTER 27 AND NFPA 70 OF THE UNIFORM CODE AND BE INSPECTED BY AN APPROVED ELECTRICAL INSPECTION AGENCY. INCLUDE THE COSTS FOR SUCH INSPECTIONS IN THE BID.

ELECTRICAL SYMBOLS

- PANELBOARD
- CONTROL PANEL
- CONDUIT INSTALLED OVERHEAD
- CONDUIT INSTALLED BELOW GRADE OR FINISHED FLOOR
- CONDUIT TURNED UP
- CONDUIT TURNED DOWN
- JUNCTION BOX
- CONDUIT FLOOR FLANGE
- DISCONNECT SWITCH

ELECTRICAL ABBREVIATIONS

A OR AMP	AMPERE
AC	ALTERNATING CURRENT
AIC	AMPERE INTERUPTING CURRENT
AWG	AMERICAN WIRE GAUGE
C	CONDUIT
CB	CIRCUIT BREAKER
CP	CONTROL PANEL
EXIST	EXISTING
(E)	EXISTING
GFCI	GROUND FAULT CIRCUIT INTERRUPTER
GND	GROUND
MCB	MAIN CIRCUIT BREAKER
MTD	MOUNTED
(N)	NEW
PVC	POLYVINYL CHLORIDE
RGS	RIGID GALVANIZED STEEL
SS	STAINLESS STEEL
TVSS	TRANSIENT VOLTAGE SURGE SUPPRESSER
TYP	TYPICAL
UL	UNDERWRITERS LABORATORIES
V	VOLTS
VA	VOLT-AMPS
WP	WEATHERPROOF (NEMA 4X)

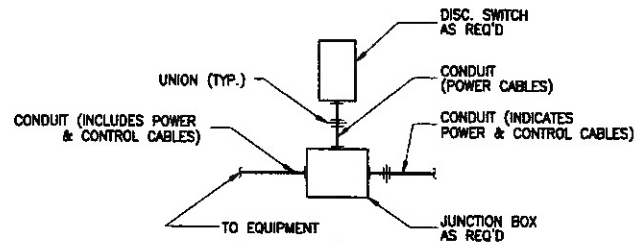

TYPICAL POWER & CONTROL WIRING WITH LOCAL DISCONNECT SWITCH

(NOT TO SCALE)

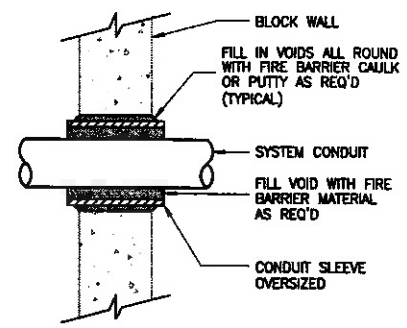

TYPICAL CONDUIT THRU BLOCK WALL

N.T.S.

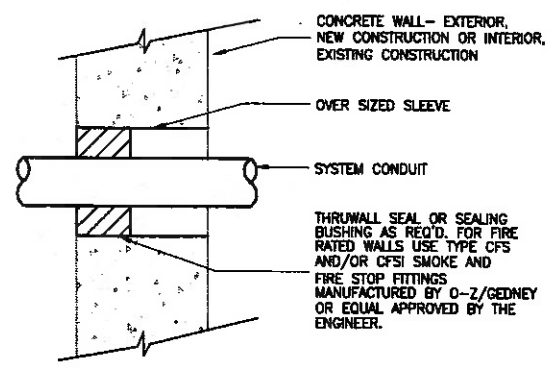

TYPICAL CONDUIT THRU CONCRETE WALL (ABOVE GRADE)

(NOT TO SCALE)

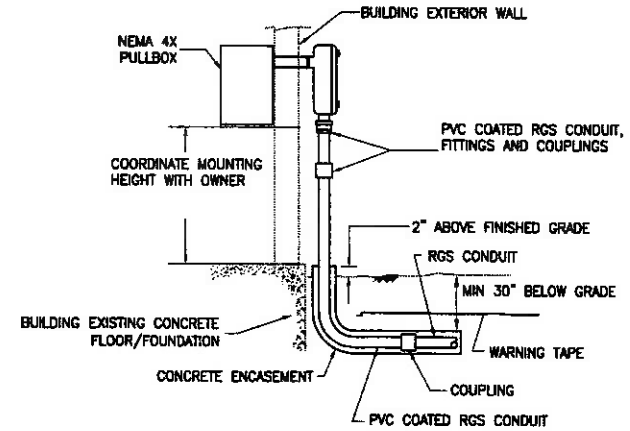

DUCT TERMINATION AT EXISTING BUILDING

NTS

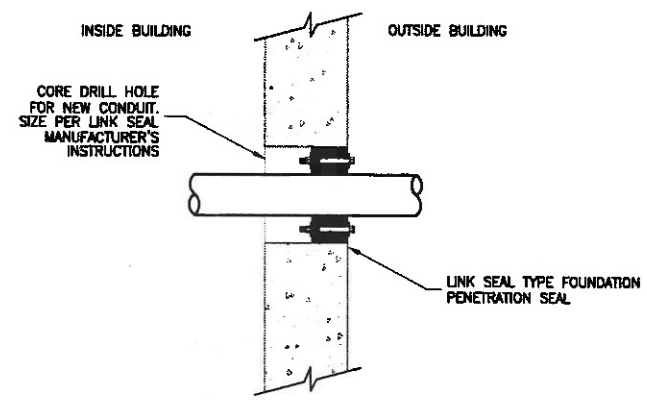

CONDUIT PENETRATION FOUNDATION WALL

N.T.S.

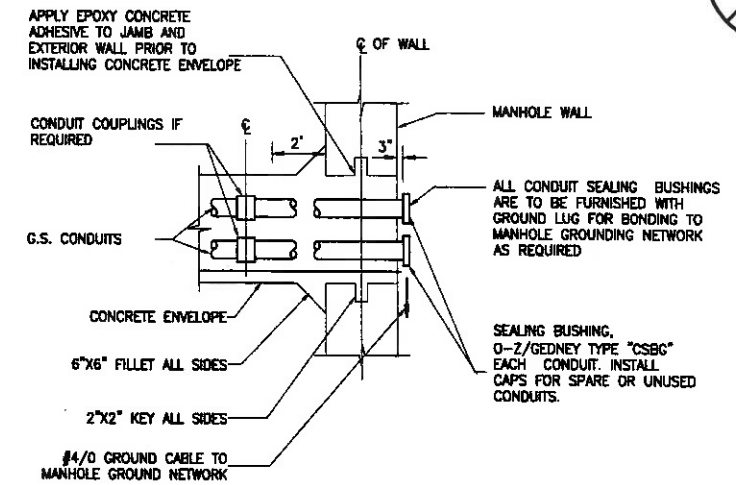

TYPICAL HAND HOLE DUCT BANK TERMINATION DETAIL

(NOT TO SCALE)

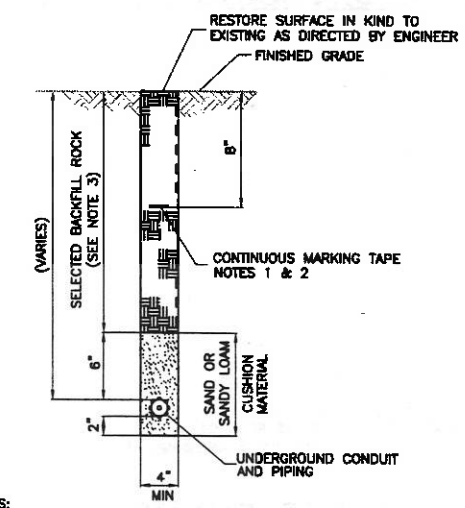

NOTES:

1. ALL UNDERGROUND CONDUIT SHALL BE MARKED IN THE TRENCH USING CONTINUOUS RED METALLIC MARKING TAPE. COORDINATE WARNING TAPE WITH DIG SAFE UTILITY DESIGNATIONS.
2. THE MARKING TAPE SHALL BE PLACED APPROXIMATELY 8" BELOW FINISHED GRADE AS SHOWN ABOVE. WHILE BACKFILLING UTILITY TRENCH.
3. SELECTED BACKFILL OF ROCK FREE SOIL SHALL BE PLACED IN 6" LIFTS AND EACH WELL COMPACTED.
4. ELECTRIC CONDUITS TO BE BURIED MIN. 30" BELOW GRADE.

UNDERGROUND UTILITIES TYPICAL TRENCH DETAIL

(NOT TO SCALE)

NOTE
SCALE REDUCTION
THESE REDUCED PLANS MAY NOT BE EXACTLY TO SCALE. ALL INDICATED SCALES ARE REDUCED TO APPROXIMATELY HALF SIZE.

0 1 2 3 4

Gannett Fleming ENGINEERS, P.C.
LOCUST VALLEY, NY — HARRISBURG, PA

STATE OF NEW YORK · STEPHEN HADJIYANE · 086695 · LICENSED PROFESSIONAL ENGINEER

DATE	DESCRIPTION	BY	SYM.
11/07	GENERAL REVISIONS	SH	2
5/07	GENERAL REVISIONS	SH	1
4/07	REG. SUBMISSION	SH	0

REVISIONS

NEW YORK STATE THRUWAY AUTHORITY
DEPARTMENT OF ENGINEERING SERVICES
200 SOUTHERN BLVD., ALBANY, N.Y. 12209

TITLE OF PROJECT: REHABILITATION OF THE WASTEWATER TREATMENT PLANT
LOCATION OF PROJECT: STORMVILLE SERVICE AREA M.P. 55.57 W.B.
TITLE OF DRAWING: ELECTRICAL NOTES, SYMBOLS, ABBREVIATIONS AND TYPICAL DETAILS

NEW YORK STATE THRUWAY AUTHORITY

CONTRACT NUMBER: TANY 08-17A
DATE: 4/23/07
DRAWING NUMBER: G-005

DRAFTED BY: M. Dehty
DESIGNED BY: Eric Fahl
CHECKED BY: Jeffrey Greenfield
IN CHARGE OF: Stephen Hadjiyane
12/31/07 1:14pm PL
Microstation/design\G-005-Elec notes & details.dgn by LANDON

12/21/07 1:15pm FILE= W:\PROJECTS\14000\14489\001 (rehabilitation)\dwgs\G-006-notes-site plan.dwg by LANSON

IN CHARGE OF: DESIGNED BY: DRAFTED BY: M. Doherty CHECKED BY:

NOTE
SCALE REDUCTION

THESE REDUCED PLANS MAY NOT BE EXACTLY TO SCALE. ALL INDICATED SCALES ARE REDUCED TO APPROXIMATELY HALF SIZE.

0 1 2 3 4

0 5 20

SCALE: 1" = 10'

Gannett Fleming
ENGINEERS, P.C.

LOCUST VALLEY, NY HARRISBURG, PA

STATE OF NEW YORK
STEPHEN HADJIYANE
066695
LICENSED PROFESSIONAL ENGINEER

DATE	DESCRIPTION	BY	SYM.
11/07	GENERAL REVISIONS	SH	2
5/07	GENERAL REVISIONS	SH	1
4/07	REG. SUBMISSION	SH	0

REVISIONS

NEW YORK STATE THRUWAY AUTHORITY
DEPARTMENT OF ENGINEERING SERVICES
200 SOUTHERN BLVD., ALBANY, N.Y. 12209

TITLE OF PROJECT
REHABILITATION OF THE WASTEWATER TREATMENT PLANT

LOCATION OF PROJECT
STORMVILLE SERVICE AREA
M.P. 55.57 W.B.

TITLE OF DRAWING

NOT USED

NEW YORK STATE THRUWAY AUTHORITY

CONTRACT NUMBER: TANY 08-17A

DATE: 4/23/07

DRAWING NUMBER: G-006

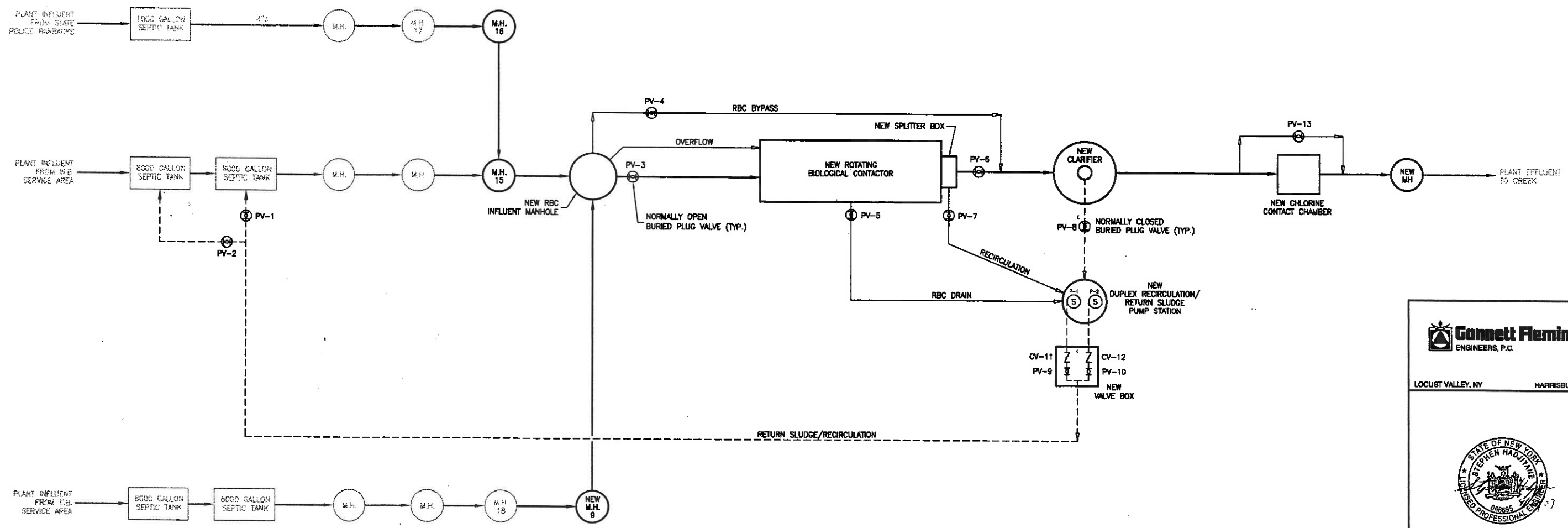

NOTE:

1. SEE SPECIFICATION SECTION 15100 – VALVES FOR SCHEDULE

NOTE
SCALE REDUCTION

THESE REDUCED PLANS MAY NOT BE EXACTLY TO SCALE. ALL INDICATED SCALES ARE REDUCED TO APPROXIMATELY HALF SIZE.

0 1 2 3 4

Gannett Fleming ENGINEERS, P.C.

LOCUST VALLEY, NY HARRISBURG, PA

STATE OF NEW YORK · STEPHEN HADJITAKIS · LICENSED PROFESSIONAL ENGINEER · 086695

DATE	DESCRIPTION	BY	SYM.
11/07	GENERAL REVISIONS	SH	2
5/07	GENERAL REVISIONS	SH	1
4/07	REG. SUBMISSION	SH	0

REVISIONS

NEW YORK STATE THRUWAY AUTHORITY
DEPARTMENT OF ENGINEERING SERVICES
200 SOUTHERN BLVD., ALBANY, N.Y. 12209

TITLE OF PROJECT: REHABILITATION OF THE WASTEWATER TREATMENT PLANT

LOCATION OF PROJECT: STORMVILLE SERVICE AREA M.P. 55.57 W.B.

TITLE OF DRAWING: PROCESS FLOW DIAGRAM

NEW YORK STATE THRUWAY AUTHORITY

CONTRACT NUMBER: TANY 08-17A

DATE: 4/23/07

DRAWING NUMBER: G-101

DRAFTED BY: M. Doherty

CHECKED BY: Peter Rosenblad

DESIGNED BY:

IN CHARGE OF:

12/31/07 1:15pm FILE= K:\PROJECTS\41000\A\44999\001 (stormville)\design\G-101 flow diagram.dwg by LANSON VOEG=

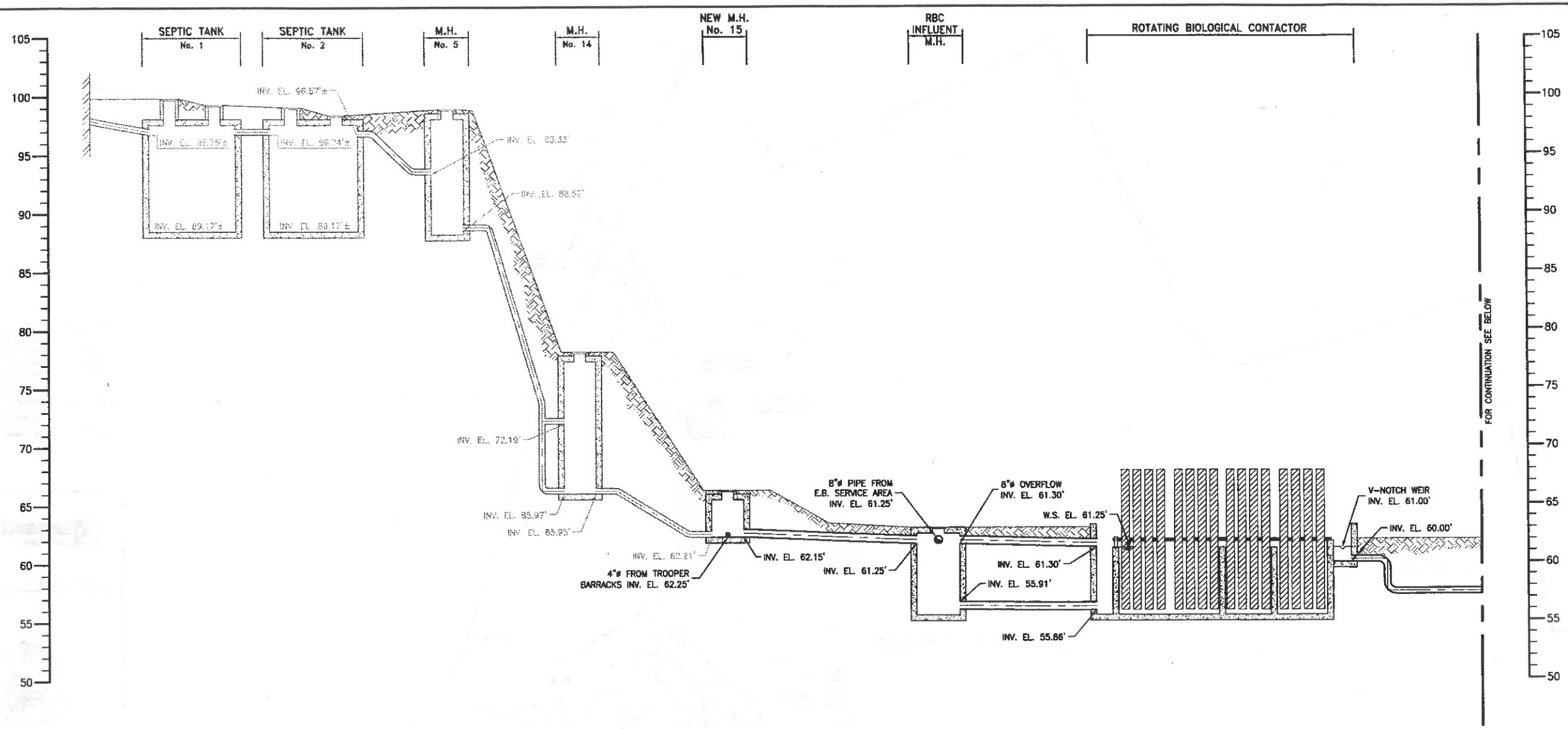

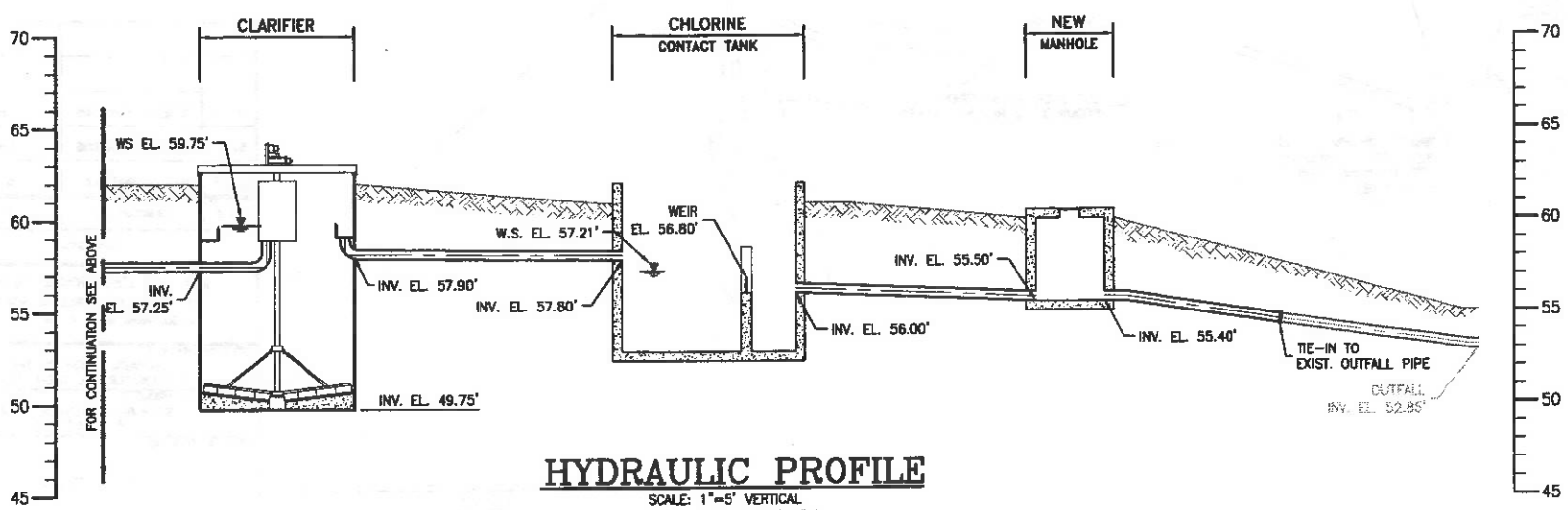

HYDRAULIC PROFILE

SCALE: 1"=5' VERTICAL
N.T.S. HORIZONTAL

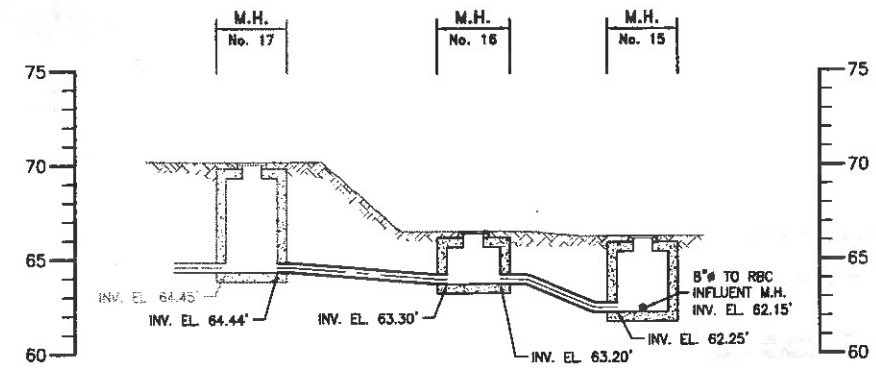

HYDRAULIC PROFILE MH-17 TO MH-15

SCALE: 1"=5' VERTICAL
N.T.S. HORIZONTAL

NOTE
SCALE REDUCTION

THESE REDUCED PLANS MAY NOT BE EXACTLY TO SCALE. ALL INDICATED SCALES ARE REDUCED TO APPROXIMATELY HALF SIZE.

0 1 2 3 4

NOTES:
1. CONTRACTOR SHALL FIELD VERIFY ALL ELEVATIONS PRIOR TO STARTING WORK.

Gannett Fleming ENGINEERS, P.C.
LOCUST VALLEY, NY HARRISBURG, PA

STATE OF NEW YORK · STEPHEN HADJIPANE · 086695 · LICENSED PROFESSIONAL ENGINEER

DATE	DESCRIPTION	BY	SYM.
11/07	GENERAL REVISIONS	SH	2
5/07	GENERAL REVISIONS	SH	1
4/07	REG. SUBMISSION	SH	0

REVISIONS

NEW YORK STATE THRUWAY AUTHORITY
DEPARTMENT OF ENGINEERING SERVICES
200 SOUTHERN BLVD., ALBANY, N.Y. 12209

TITLE OF PROJECT
REHABILITATION OF THE WASTEWATER TREATMENT PLANT

LOCATION OF PROJECT
STORMVILLE SERVICE AREA
M.P. 55.57 W.B.

TITLE OF DRAWING
HYDRAULIC PROFILE

NEW YORK STATE THRUWAY AUTHORITY

CONTRACT NUMBER: TANY 08-17A
DATE: 4/23/07
DRAWING NUMBER: G-102

DRAFTED BY: M. Dekatz
CHECKED BY: Peter Grunwald
DESIGNED BY:
IN CHARGE OF:
12/31/07 1:17pm FILE= K:\PROJECTS\4400\X4499\001 (stormville)\design\C-102 hydraulic profile.dwg by LMASON

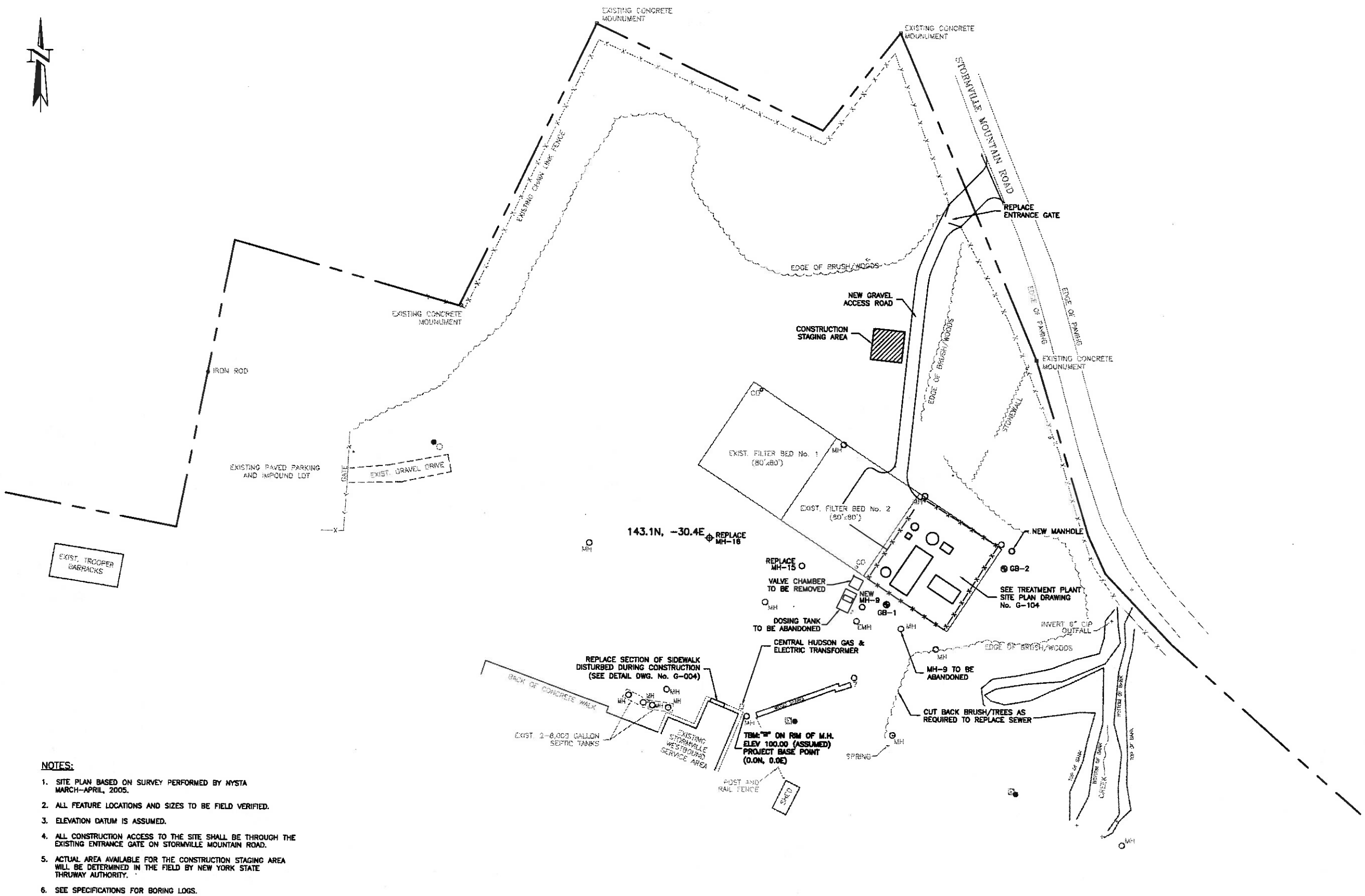

NOTES:

1. SITE PLAN BASED ON SURVEY PERFORMED BY NYSTA MARCH–APRIL, 2005.
2. ALL FEATURE LOCATIONS AND SIZES TO BE FIELD VERIFIED.
3. ELEVATION DATUM IS ASSUMED.
4. ALL CONSTRUCTION ACCESS TO THE SITE SHALL BE THROUGH THE EXISTING ENTRANCE GATE ON STORMVILLE MOUNTAIN ROAD.
5. ACTUAL AREA AVAILABLE FOR THE CONSTRUCTION STAGING AREA WILL BE DETERMINED IN THE FIELD BY NEW YORK STATE THRUWAY AUTHORITY.
6. SEE SPECIFICATIONS FOR BORING LOGS.

0 20 80
SCALE: 1" = 40'

NOTE
SCALE REDUCTION
THESE REDUCED PLANS MAY NOT BE EXACTLY TO SCALE. ALL INDICATED SCALES ARE REDUCED TO APPROXIMATELY HALF SIZE.

0 1 2 3 4

LEGEND

143.3	SPOT ELEVATION
CO	CLEAN OUT
MH	MANHOLE
EMH	ELECTRICAL MANHOLE
GB-1	SOIL BORING LOCATION
	PROPERTY LINE
—X—X—	EXISTING FENCE
—X—X—	NEW CHAIN LINK FENCE

Gannett Fleming
ENGINEERS, P.C.
LOCUST VALLEY, NY · HARRISBURG, PA

STATE OF NEW YORK · STEPHEN HADJIYANE · 086695 · LICENSED PROFESSIONAL ENGINEER

DATE	DESCRIPTION	BY	SYM.
11/07	GENERAL REVISIONS	SH	2
5/07	GENERAL REVISIONS	SH	1
4/07	REG. SUBMISSION	SH	0

REVISIONS

NEW YORK STATE THRUWAY AUTHORITY
DEPARTMENT OF ENGINEERING SERVICES
200 SOUTHERN BLVD., ALBANY, N.Y. 12209

TITLE OF PROJECT
REHABILITATION OF THE WASTEWATER TREATMENT PLANT

LOCATION OF PROJECT
STORMVILLE SERVICE AREA
M.P. 55.57 W.B.

TITLE OF DRAWING
SITE PLAN

NEW YORK STATE THRUWAY AUTHORITY

CONTRACT NUMBER: TANY 08-17A
DATE: 4/23/07
DRAWING NUMBER: G-103

DESIGNED BY: Eric Tel
DRAFTED BY: M. Doherty
CHECKED BY: Peter Grenibeal
IN CHARGE OF:
12/21/07 1:17pm FILE= K:\PROJECTS\4100\A-44888\001 (stormville)\design\G-103-site plan.dwg by GMASSH XREF=xlsrnd

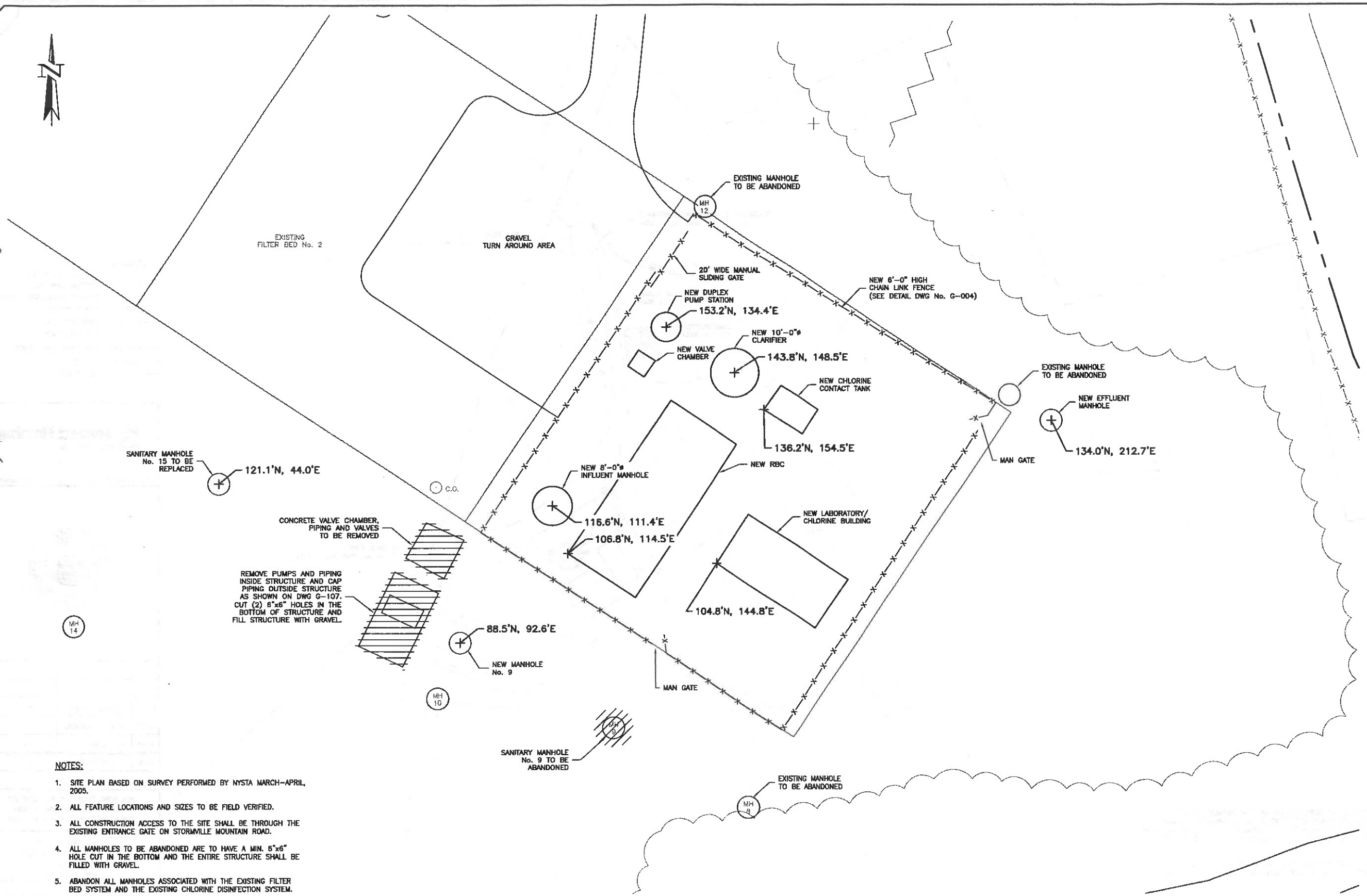

NOTES:

1. SITE PLAN BASED ON SURVEY PERFORMED BY NYSTA MARCH-APRIL, 2005.
2. ALL FEATURE LOCATIONS AND SIZES TO BE FIELD VERIFIED.
3. ALL CONSTRUCTION ACCESS TO THE SITE SHALL BE THROUGH THE EXISTING ENTRANCE GATE ON STORMVILLE MOUNTAIN ROAD.
4. ALL MANHOLES TO BE ABANDONED ARE TO HAVE A MIN. 6"x6" HOLE CUT IN THE BOTTOM AND THE ENTIRE STRUCTURE SHALL BE FILLED WITH GRAVEL.
5. ABANDON ALL MANHOLES ASSOCIATED WITH THE EXISTING FILTER BED SYSTEM AND THE EXISTING CHLORINE DISINFECTION SYSTEM.
6. SEE DRAWING G-103 FOR STRUCTURE LOCATION BASE POINT.

0 5 20
SCALE: 1" = 10'

NOTE
SCALE REDUCTION
THESE REDUCED PLANS MAY NOT BE EXACTLY TO SCALE. ALL INDICATED SCALES ARE REDUCED TO APPROXIMATELY HALF SIZE.
0 1 2 3 4

Gannett Fleming
ENGINEERS, P.C.
LOCUST VALLEY, NY HARRISBURG, PA

STATE OF NEW YORK
STEPHEN HADJIYANE
086695
LICENSED PROFESSIONAL ENGINEER

DATE	DESCRIPTION	BY	SYM.
11/07	GENERAL REVISIONS	SH	2
5/07	GENERAL REVISIONS	SH	1
4/07	REG. SUBMISSION	SH	0

REVISIONS

NEW YORK STATE THRUWAY AUTHORITY
DEPARTMENT OF ENGINEERING SERVICES
200 SOUTHERN BLVD., ALBANY, N.Y. 12209

TITLE OF PROJECT
REHABILITATION OF THE WASTEWATER TREATMENT PLANT

LOCATION OF PROJECT
STORMVILLE SERVICE AREA
M.P. 55.57 W.B.

TITLE OF DRAWING
WASTEWATER TREATMENT PLANT SITE PLAN

NEW YORK STATE THRUWAY AUTHORITY

CONTRACT NUMBER: TANY 08-17A
DATE: 4/23/07
DRAWING NUMBER: G-104

DRAFTED BY: M. Dolity
CHECKED BY: Peter Greenfield
DESIGNED BY:
IN CHARGE OF:

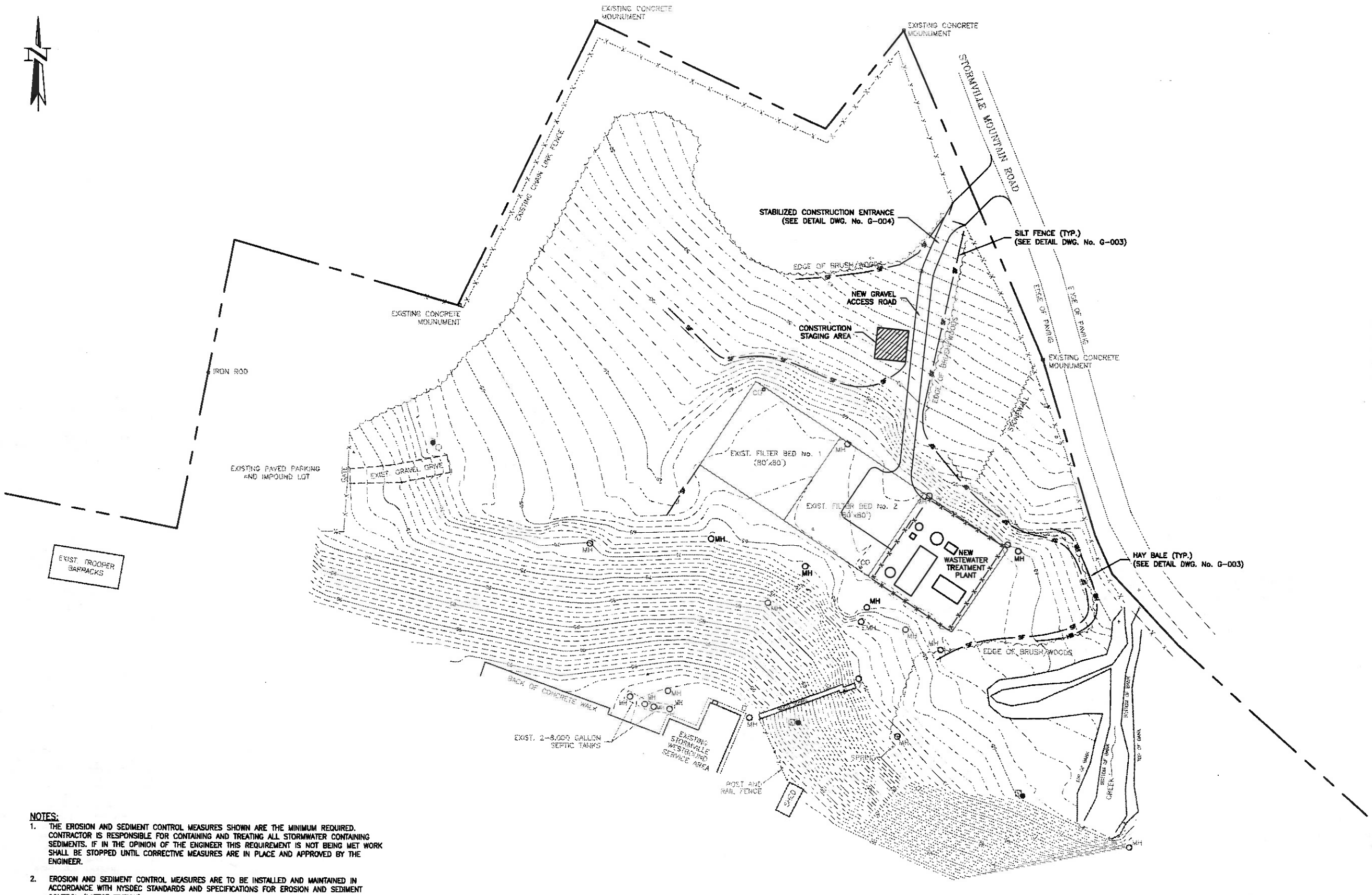

LEGEND

CO	EXISTING CLEAN OUT
MH	EXISTING MANHOLE
EMH	EXISTING ELECTRICAL MANHOLE
MH	NEW MANHOLE
	PROPERTY LINE
	EXISTING FENCE
	NEW CHAIN LINK FENCE
HB	HAY BAIL
SF	SILT FENCE

NOTES:

1. THE EROSION AND SEDIMENT CONTROL MEASURES SHOWN ARE THE MINIMUM REQUIRED. CONTRACTOR IS RESPONSIBLE FOR CONTAINING AND TREATING ALL STORMWATER CONTAINING SEDIMENTS. IF IN THE OPINION OF THE ENGINEER THIS REQUIREMENT IS NOT BEING MET WORK SHALL BE STOPPED UNTIL CORRECTIVE MEASURES ARE IN PLACE AND APPROVED BY THE ENGINEER.
2. EROSION AND SEDIMENT CONTROL MEASURES ARE TO BE INSTALLED AND MAINTAINED IN ACCORDANCE WITH NYSDEC STANDARDS AND SPECIFICATIONS FOR EROSION AND SEDIMENT CONTROL (LATEST EDITION).
3. THE ACTUAL AREA AVAILABLE FOR THE CONTRACTORS STAGING AREA WILL BE DETERMINED IN THE FIELD BY THE NEW YORK STATE THRUWAY AUTHORITY REPRESENTATIVE.
4. SEE TRENCH DETAILS ON DRAWINGS G-003 AND G-005 FOR ADDITIONAL REQUIRED MEASURES.

0 20 80
SCALE: 1" = 40'

NOTE
SCALE REDUCTION
THESE REDUCED PLANS MAY NOT BE EXACTLY TO SCALE. ALL INDICATED SCALES ARE REDUCED TO APPROXIMATELY HALF SIZE.

0 1 2 3 4

Gannett Fleming ENGINEERS, P.C.
LOCUST VALLEY, NY HARRISBURG, PA

STATE OF NEW YORK · STEPHEN HADJYIANNIS · 066695 · LICENSED PROFESSIONAL ENGINEER

DATE	DESCRIPTION	BY	SYM.
11/07	GENERAL REVISIONS	SH	2
5/07	GENERAL REVISIONS	SH	1
4/07	REG. SUBMISSION	SH	0

REVISIONS

NEW YORK STATE THRUWAY AUTHORITY
DEPARTMENT OF ENGINEERING SERVICES
200 SOUTHERN BLVD., ALBANY, N.Y. 12209

TITLE OF PROJECT
REHABILITATION OF THE WASTEWATER TREATMENT PLANT

LOCATION OF PROJECT
STORMVILLE SERVICE AREA
M.P. 55.57 W.B.

TITLE OF DRAWING
EROSION AND SEDIMENTATION CONTROL PLAN

NEW YORK STATE THRUWAY AUTHORITY

CONTRACT NUMBER: TANY 08-17A
DATE: 4/23/07
DRAWING NUMBER: G-105

DESIGNED BY: _____ DRAFTED BY: M. Delaney CHECKED BY: _____ IN CHARGE OF: _____

12/31/07 1:19pm FILE= K:\PROJECTS\4000's\44989\001 (stormville)\dwgs\G-105-Erosion control plan.dwg by LMSON

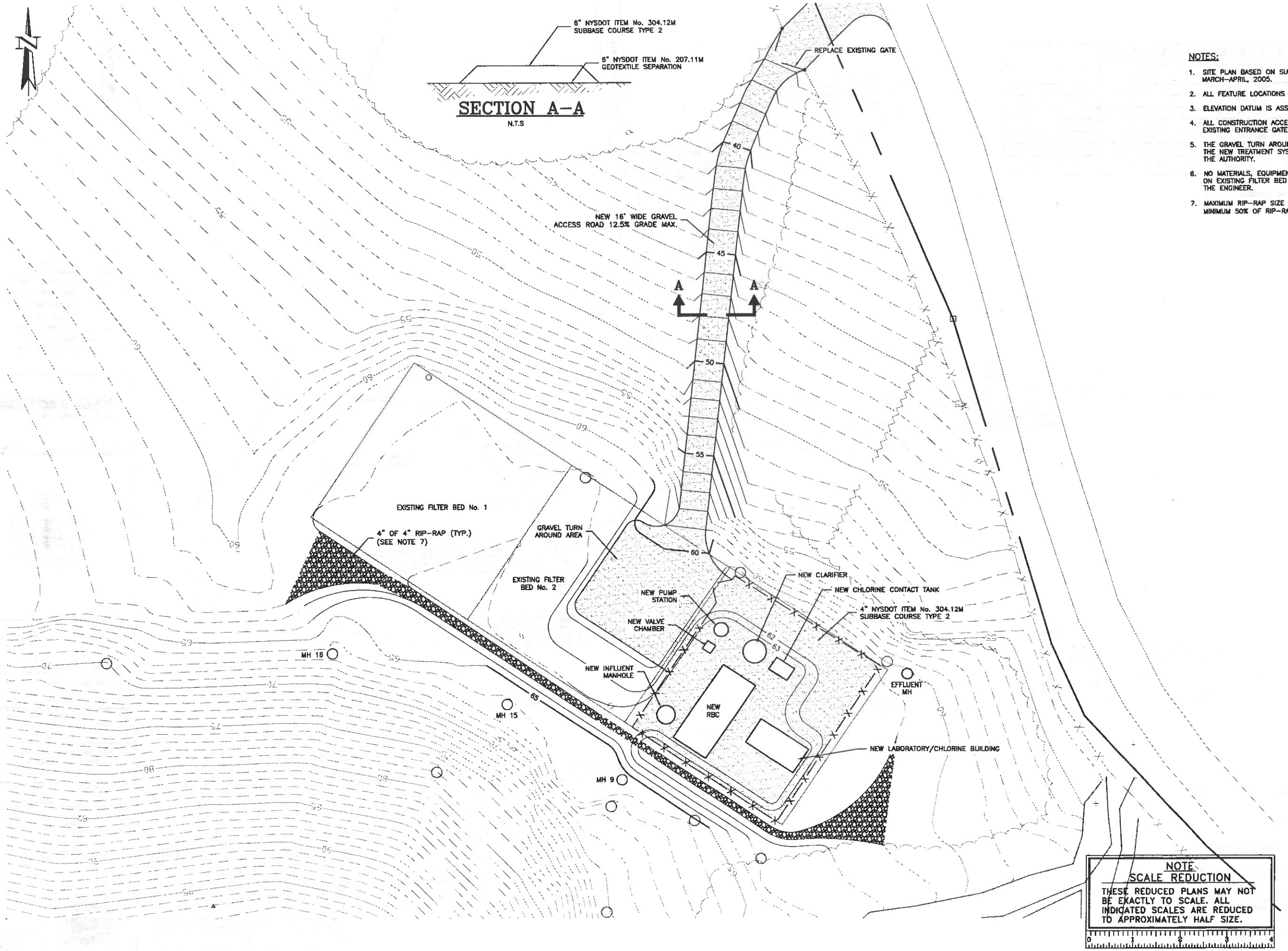

NOTES:

1. SITE PLAN BASED ON SURVEY PERFORMED BY NYSTA MARCH–APRIL, 2005.
2. ALL FEATURE LOCATIONS AND SIZES TO BE FIELD VERIFIED.
3. ELEVATION DATUM IS ASSUMED.
4. ALL CONSTRUCTION ACCESS TO THE SITE SHALL BE THROUGH THE EXISTING ENTRANCE GATE ON STORMVILLE MOUNTAIN ROAD.
5. THE GRAVEL TURN AROUND AREA IS TO BE CONSTRUCTED AFTER THE NEW TREATMENT SYSTEM IS OPERATIONAL AND ACCEPTED BY THE AUTHORITY.
6. NO MATERIALS, EQUIPMENT, ETC. ARE TO BE STORED OR USED ON EXISTING FILTER BED NOS. 1 AND 2, UNLESS APPROVED BY THE ENGINEER.
7. MAXIMUM RIP–RAP SIZE =6". MINIMUM RIP–RAP SIZE=2". MINIMUM 50% OF RIP–RAP SHALL BE 4".

LEGEND

CO	EXISTING CLEAN OUT
MH	EXISTING MANHOLE
EMH	EXISTING ELECTRICAL MANHOLE
MH	NEW MANHOLE
	PROPERTY LINE
	EXISTING FENCE
	NEW CHAIN LINK FENCE

0 10 40
SCALE: 1" = 20'

NOTE
SCALE REDUCTION
THESE REDUCED PLANS MAY NOT BE EXACTLY TO SCALE. ALL INDICATED SCALES ARE REDUCED TO APPROXIMATELY HALF SIZE.
0 1 2 3 4

Gannett Fleming
ENGINEERS, P.C.
LOCUST VALLEY, NY HARRISBURG, PA

STATE OF NEW YORK
STEPHEN HADJYANE
086695
LICENSED PROFESSIONAL ENGINEER

DATE	DESCRIPTION	BY	SYM.
11/07	GENERAL REVISIONS	SH	2
5/07	GENERAL REVISIONS	SH	1
4/07	REC. SUBMISSION	SH	0

REVISIONS

NEW YORK STATE THRUWAY AUTHORITY
DEPARTMENT OF ENGINEERING SERVICES
200 SOUTHERN BLVD., ALBANY, N.Y. 12209

TITLE OF PROJECT
REHABILITATION OF THE WASTEWATER TREATMENT PLANT

LOCATION OF PROJECT
STORMVILLE SERVICE AREA
M.P. 55.57 W.B.

TITLE OF DRAWING
SITE GRADING PLAN

NEW YORK STATE THRUWAY AUTHORITY

CONTRACT NUMBER: TANY 08-17A
DATE: 4/23/07
DRAWING NUMBER: G-106

DRAFTED BY: M. Dekay
CHECKED BY:
DESIGNED BY:
IN CHARGE OF:
01/05/09 10:06am FILE= K:\PROJECTS\44000\44089\001 (stormville)\design\G-106-grading plan.dwg by LAWSON XREF=Sgm-TITLE,

YARD PIPING SCHEDULE

TAG	SIZE	TYPE	SERVICE	FROM	TO
1	4"ø	SCH. 80 PVC	SANITARY SEWER	MH-17	MH-16
2	4"ø	SCH. 80 PVC	SANITARY SEWER	MH-16	MH-15
3	8"ø	D.I.	SANITARY SEWER	MH-15	RBC INFLUENT MH
4	6"ø	D.I.	SANITARY SEWER	MH-18	MH-9
5	6"ø	D.I.	SANITARY SEWER	MH-9	RBC INFLUENT MH
6	1"ø	COPPER	POTABLE WATER	SERVICE AREA BLDG.	LAB/CHLORINE BLDG.
7	3"ø	D.I.	RECYCLE/RETURN SLUDGE	VALVE BOX	SEPTIC TANK

NOTE:
SEE DRAWING G-108 FOR YARD PIPING SCHEDULE CONTINUATION.

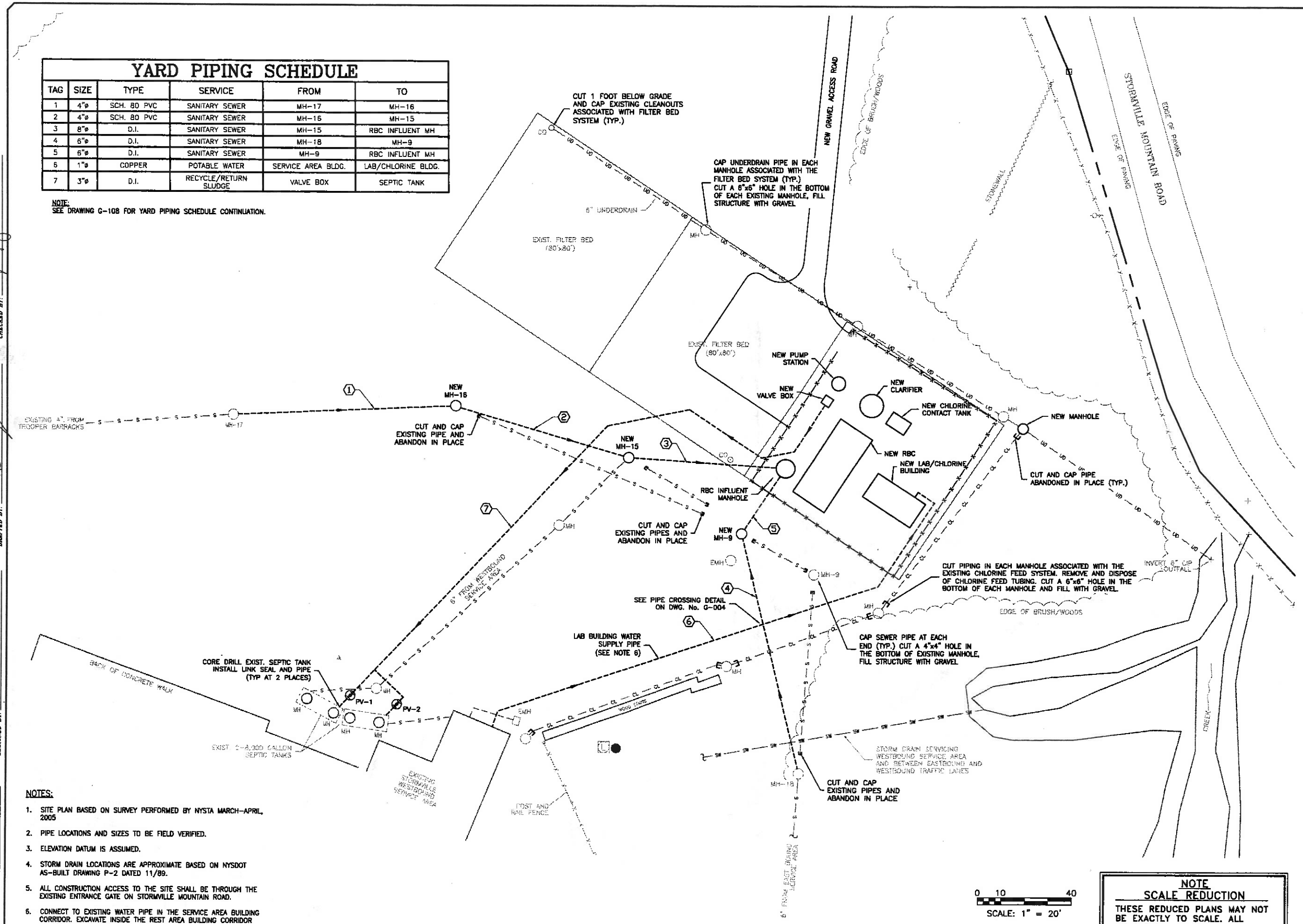

NOTES:

1. SITE PLAN BASED ON SURVEY PERFORMED BY NYSTA MARCH-APRIL, 2005
2. PIPE LOCATIONS AND SIZES TO BE FIELD VERIFIED.
3. ELEVATION DATUM IS ASSUMED.
4. STORM DRAIN LOCATIONS ARE APPROXIMATE BASED ON NYSDOT AS-BUILT DRAWING P-2 DATED 11/89.
5. ALL CONSTRUCTION ACCESS TO THE SITE SHALL BE THROUGH THE EXISTING ENTRANCE GATE ON STORMVILLE MOUNTAIN ROAD.
6. CONNECT TO EXISTING WATER PIPE IN THE SERVICE AREA BUILDING CORRIDOR. EXCAVATE INSIDE THE REST AREA BUILDING CORRIDOR AS REQUIRED TO ROUTE THE PIPE OUTSIDE. RESTORE THE CORRIDOR TO ITS ORIGINAL CONDITION.
7. ALL GRAVITY PIPING IS TO BE SLOPED AT 1% MINIMUM UNLESS OTHERWISE NOTED.

NOTE
SCALE REDUCTION
THESE REDUCED PLANS MAY NOT BE EXACTLY TO SCALE. ALL INDICATED SCALES ARE REDUCED TO APPROXIMATELY HALF SIZE.

0 1 2 3 4

Gannett Fleming ENGINEERS, P.C.
LOCUST VALLEY, NY HARRISBURG, PA

STATE OF NEW YORK · STEPHEN HADJIVINE · 086695 · LICENSED PROFESSIONAL ENGINEER

DATE	DESCRIPTION	BY	SYM.
11/07	GENERAL REVISIONS	SH	2
5/07	GENERAL REVISIONS	SH	1
4/07	REG. SUBMISSION	SH	0

REVISIONS

NEW YORK STATE THRUWAY AUTHORITY
DEPARTMENT OF ENGINEERING SERVICES
200 SOUTHERN BLVD., ALBANY, N.Y. 12209

TITLE OF PROJECT: REHABILITATION OF THE WASTEWATER TREATMENT PLANT
LOCATION OF PROJECT: STORMVILLE SERVICE AREA M.P. 55.57 W.B.
TITLE OF DRAWING: SITE YARD PIPING PLAN

NEW YORK STATE THRUWAY AUTHORITY

CONTRACT NUMBER: TANY 08-17A
DATE: 4/23/07
DRAWING NUMBER: G-107

DRAFTED BY: M. Delaney
CHECKED BY: Peter Brunilesi
DESIGNED BY:
IN CHARGE OF:
12/31/02 1:20pm FILE= K:\PROJECTS\44000\A44691\G01 (stormville)\design\G-107-yard piping dwg by LAWSON XREF=xrefs TITLE=

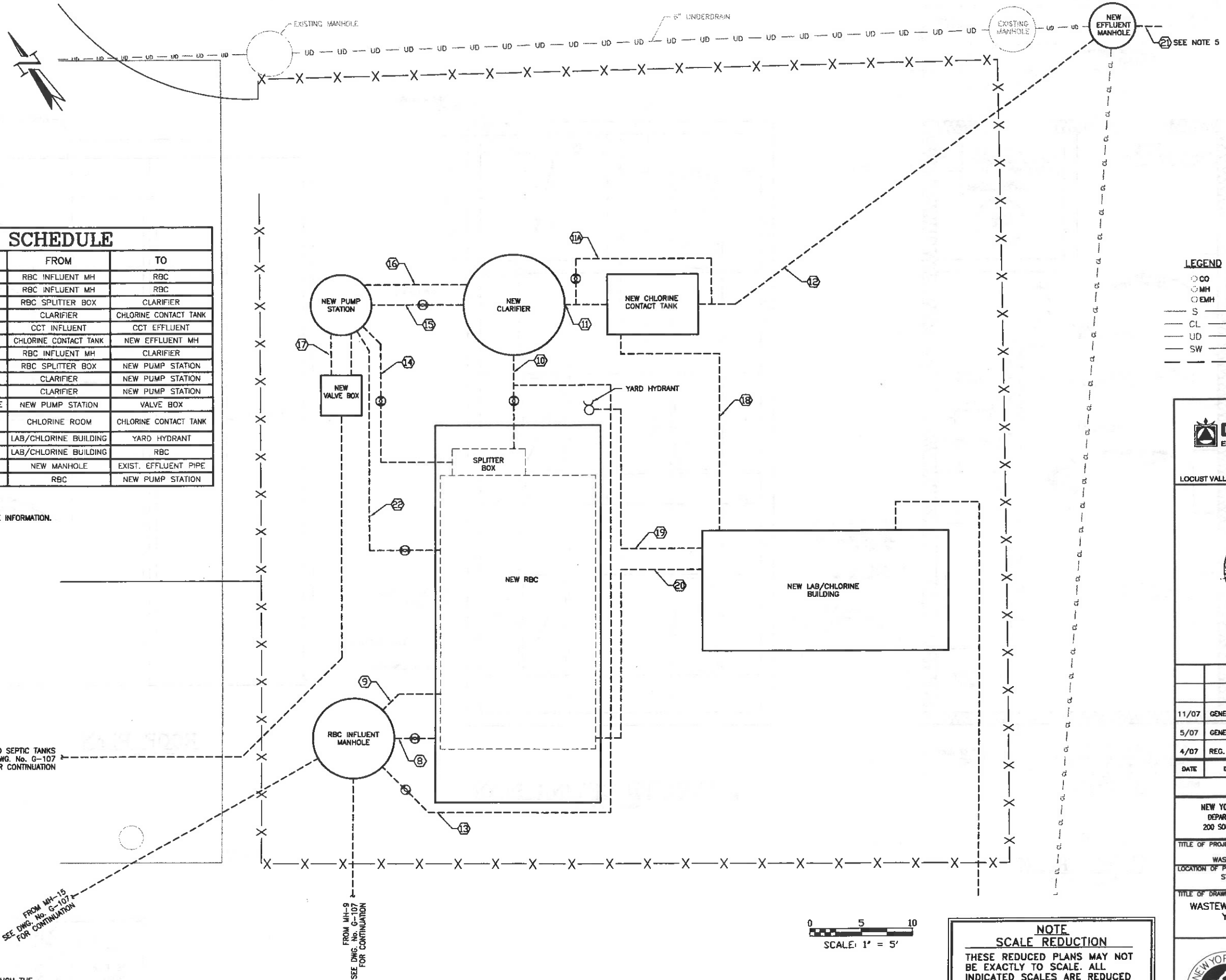

YARD PIPING SCHEDULE

TAG	SIZE	TYPE	SERVICE	FROM	TO
8	8"ø	D.I.	RBC INFLUENT	RBC INFLUENT MH	RBC
9	8"ø	D.I.	OVERFLOW	RBC INFLUENT MH	RBC
10	6"ø	D.I.	CLARIFIER INFLUENT	RBC SPLITTER BOX	CLARIFIER
11	6"ø	D.I.	CCT INFLUENT	CLARIFIER	CHLORINE CONTACT TANK
11A	6"ø	D.I.	CCT BYPASS	CCT INFLUENT	CCT EFFLUENT
12	6"ø	D.I.	WWTP EFFLUENT	CHLORINE CONTACT TANK	NEW EFFLUENT MH
13	6"ø	D.I.	RBC BYPASS	RBC INFLUENT MH	CLARIFIER
14	4"ø	D.I.	INTERNAL RECYCLE	RBC SPLITTER BOX	NEW PUMP STATION
15	4"ø	D.I.	RETURN SLUDGE	CLARIFIER	NEW PUMP STATION
16	3"ø	D.I.	SCUM	CLARIFIER	NEW PUMP STATION
17	3"ø	D.I.	RECYCLE/RETURN SLUDGE	NEW PUMP STATION	VALVE BOX
18	3"ø	D.I.	⅜" CHLORINE TUBE CARRIER PIPE	CHLORINE ROOM	CHLORINE CONTACT TANK
19	¾"ø	COPPER	POTABLE WATER	LAB/CHLORINE BUILDING	YARD HYDRANT
20	2"ø	D.I.	BUILDING DRAIN	LAB/CHLORINE BUILDING	RBC
21	6"ø	D.I.	PLANT EFFLUENT	NEW MANHOLE	EXIST. EFFLUENT PIPE
22	4"ø	D.I.	RBC DRAIN	RBC	NEW PUMP STATION

NOTE:
SEE DRAWING G-107 FOR ADDITIONAL YARD PIPING SCHEDULE INFORMATION.

LEGEND

- CO — CLEAN OUT
- MH — MANHOLE
- EMH — ELECTRICAL MANHOLE
- S — UNDERGROUND SANITARY PIPE
- CL — UNDERGROUND CHLORINE PIPE
- UD — UNDERDRAIN PIPE
- SW — STORMWATER PIPE
- NEW BURIED PIPE

NOTES:

1. SITE PLAN BASED ON SURVEY PERFORMED BY NYSTA MARCH–APRIL, 2005
2. PIPE LOCATIONS AND SIZES TO BE FIELD VERIFIED.
3. ELEVATION DATUM IS ASSUMED.
4. ALL CONSTRUCTION ACCESS TO THE SITE SHALL BE THROUGH THE EXISTING ENTRANCE GATE ON STORMVILLE MOUNTAIN ROAD.
5. REPLACE EFFLUENT PIPE AFTER THE NEW EFFLUENT MANHOLE AS REQUIRED. MAINTAIN MIN. 1% SLOPE.

NOTE
SCALE REDUCTION
THESE REDUCED PLANS MAY NOT BE EXACTLY TO SCALE. ALL INDICATED SCALES ARE REDUCED TO APPROXIMATELY HALF SIZE.

0 1 2 3 4

Gannett Fleming
ENGINEERS, P.C.
LOCUST VALLEY, NY — HARRISBURG, PA

STATE OF NEW YORK — STEPHEN HADJIYANE — LICENSED PROFESSIONAL ENGINEER — 069555

DATE	DESCRIPTION	BY	SYM.
11/07	GENERAL REVISIONS	SH	2
5/07	GENERAL REVISIONS	SH	1
4/07	REG. SUBMISSION	SH	0

REVISIONS

NEW YORK STATE THRUWAY AUTHORITY
DEPARTMENT OF ENGINEERING SERVICES
200 SOUTHERN BLVD., ALBANY, N.Y. 12209

TITLE OF PROJECT
REHABILITATION OF THE WASTEWATER TREATMENT PLANT

LOCATION OF PROJECT
STORMVILLE SERVICE AREA
M.P. 55.57 W.B.

TITLE OF DRAWING
WASTEWATER TREATMENT PLANT
YARD PIPING PLAN

NEW YORK STATE THRUWAY AUTHORITY

CONTRACT NUMBER: TANY 08-17A
DATE: 4/23/07
DRAWING NUMBER: G-108

DRAFTED BY: M. Doherty
CHECKED BY: John Greenwood
DESIGNED BY:
IN CHARGE OF:

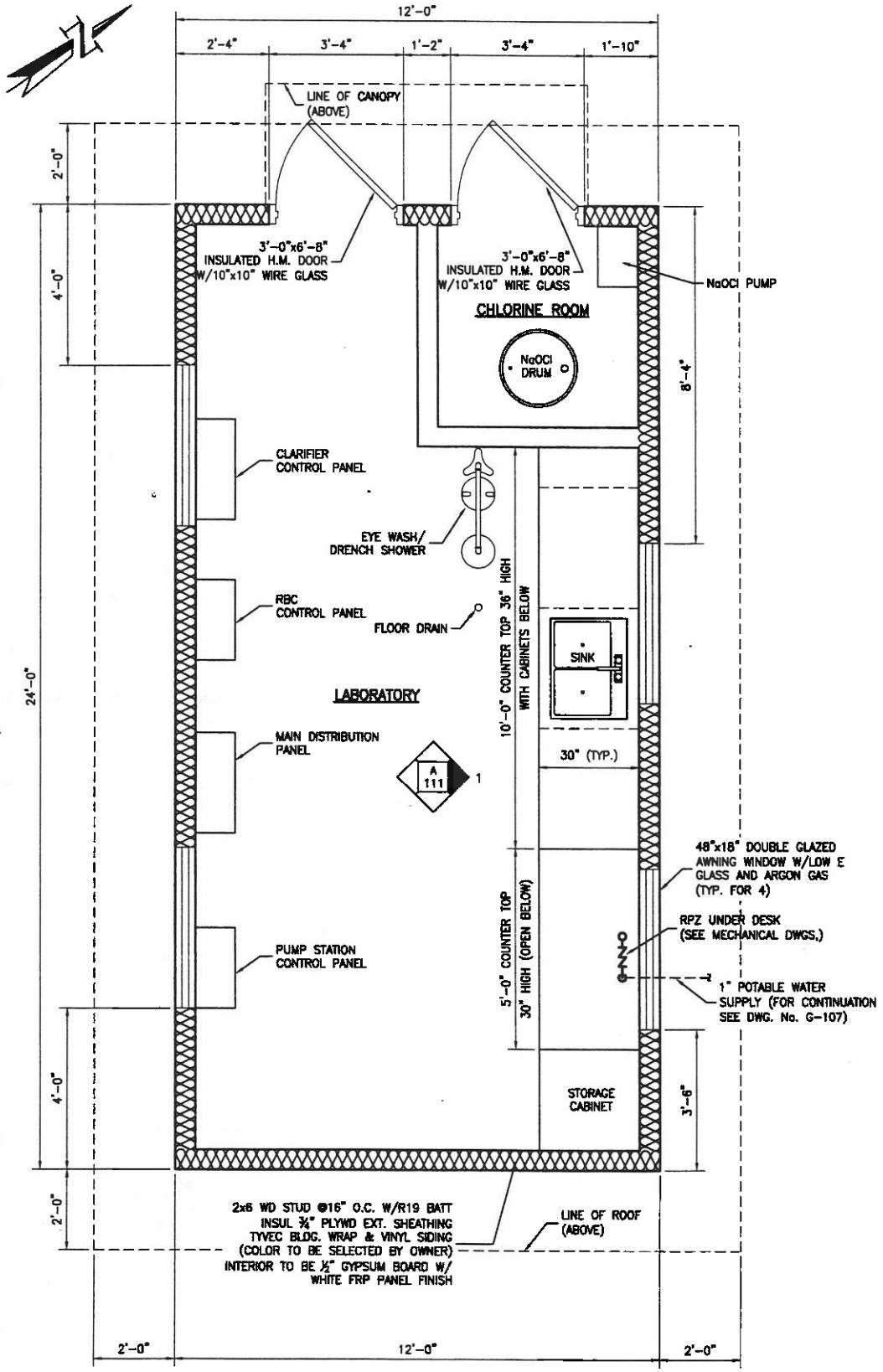

FLOOR PLAN

SCALE: 1/2"=1'-0"

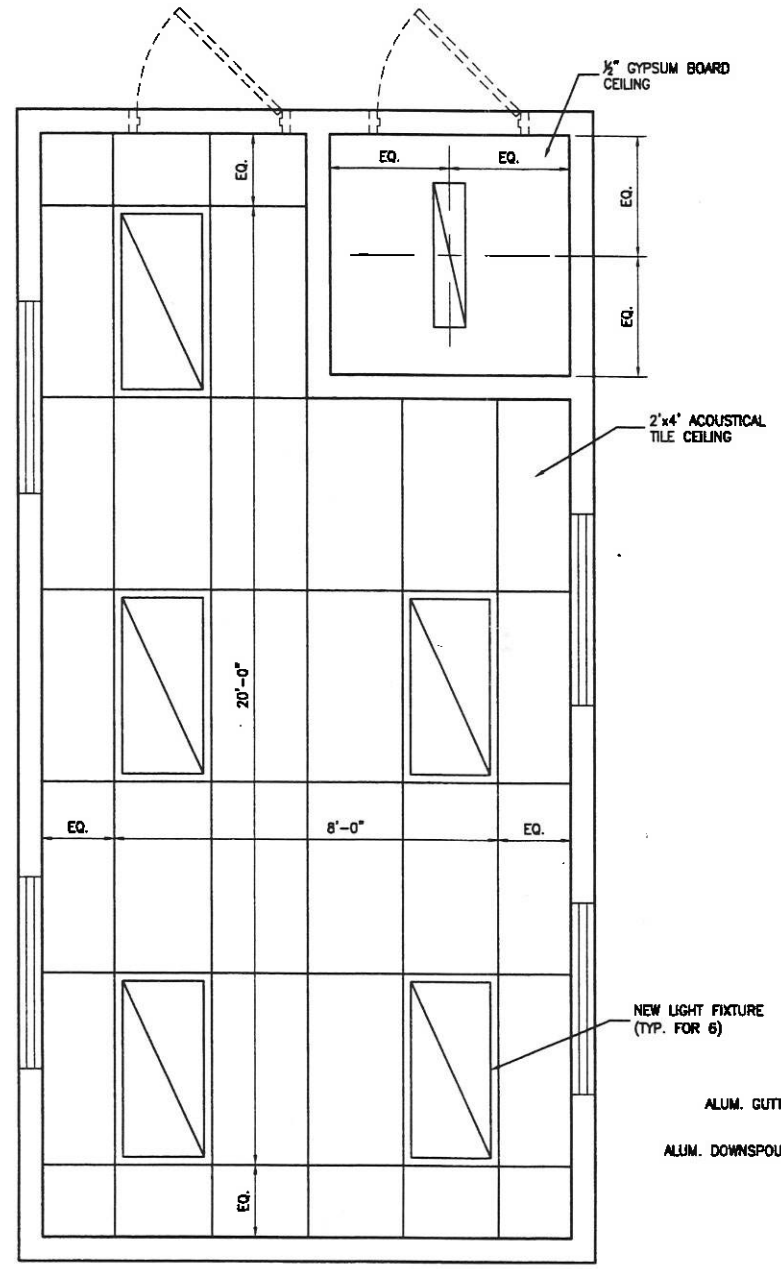

REFLECTED CEILING PLAN

SCALE: 1/2"=1'-0"

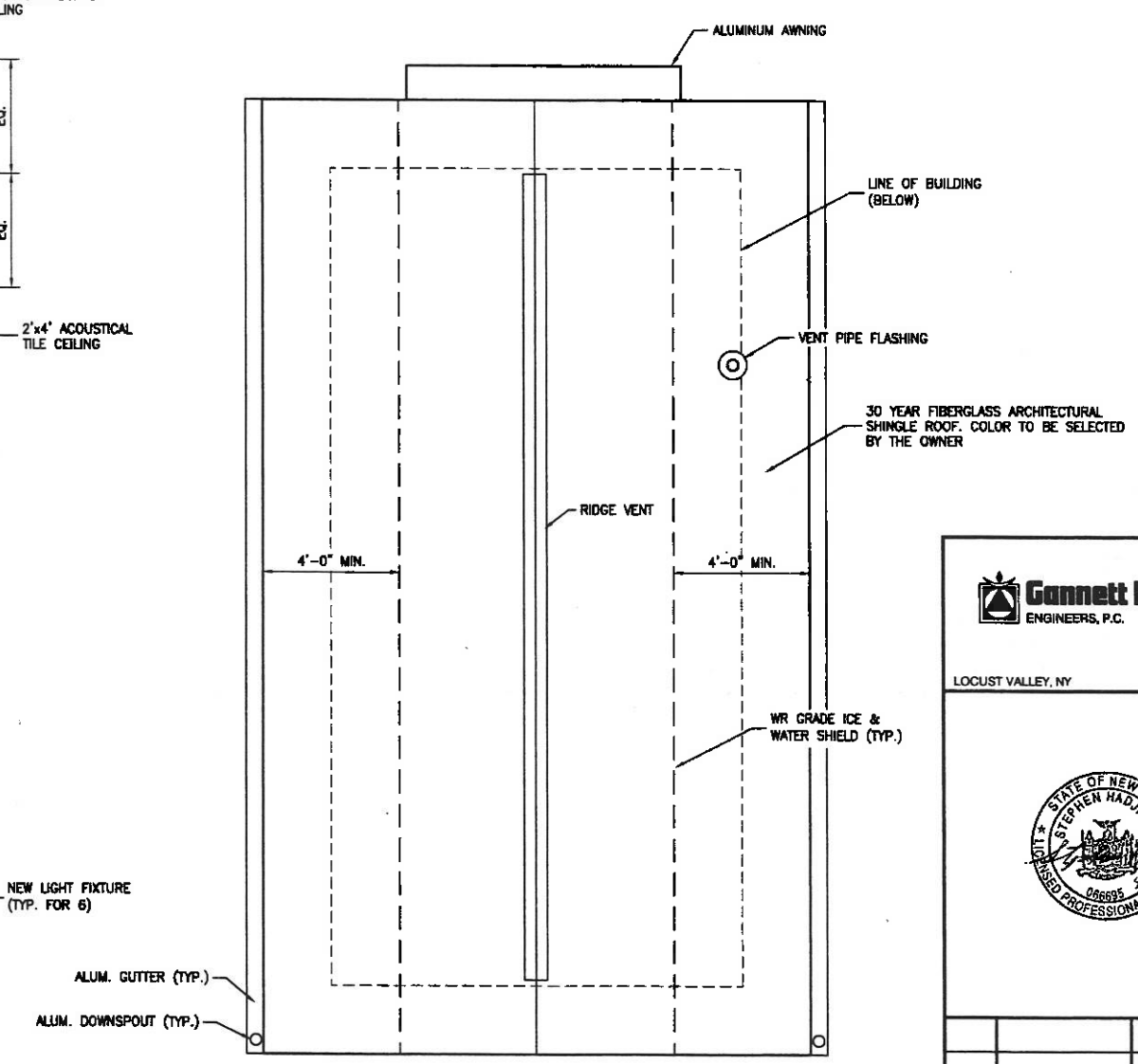

ROOF PLAN

SCALE: 3/8"=1'-0"

NOTE
SCALE REDUCTION

THESE REDUCED PLANS MAY NOT BE EXACTLY TO SCALE. ALL INDICATED SCALES ARE REDUCED TO APPROXIMATELY HALF SIZE.

0 1 2 3 4

Gannett Fleming
ENGINEERS, P.C.

LOCUST VALLEY, NY HARRISBURG, PA

STATE OF NEW YORK · STEPHEN HADJIYANE · 066635 · LICENSED PROFESSIONAL ENGINEER

DATE	DESCRIPTION	BY	SYM.
11/07	GENERAL REVISIONS	SH	2
5/07	GENERAL REVISIONS	SH	1
4/07	REG. SUBMISSION	SH	0

REVISIONS

NEW YORK STATE THRUWAY AUTHORITY
DEPARTMENT OF ENGINEERING SERVICES
200 SOUTHERN BLVD., ALBANY, N.Y. 12209

TITLE OF PROJECT
REHABILITATION OF THE WASTEWATER TREATMENT PLANT

LOCATION OF PROJECT
STORMVILLE SERVICE AREA
M.P. 55.57 W.B.

TITLE OF DRAWING
LABORATORY/CHLORINE BUILDING PLANS

NEW YORK STATE THRUWAY AUTHORITY

CONTRACT NUMBER: TANY 08-17A

DATE: 4/23/07

DRAWING NUMBER: A-109

DRAFTED BY: M. Dakity
CHECKED BY: Mary Grunstad
DESIGNED BY: Eric Fell
IN CHARGE OF: Stephen Hadjiyane
12/31/07 12:35pm PLT= K:\CONTRACTS\TANY0800\A\A109.DWG (attenuation=1.00\\ss\A\A109\Layout1) MODEL SPACE

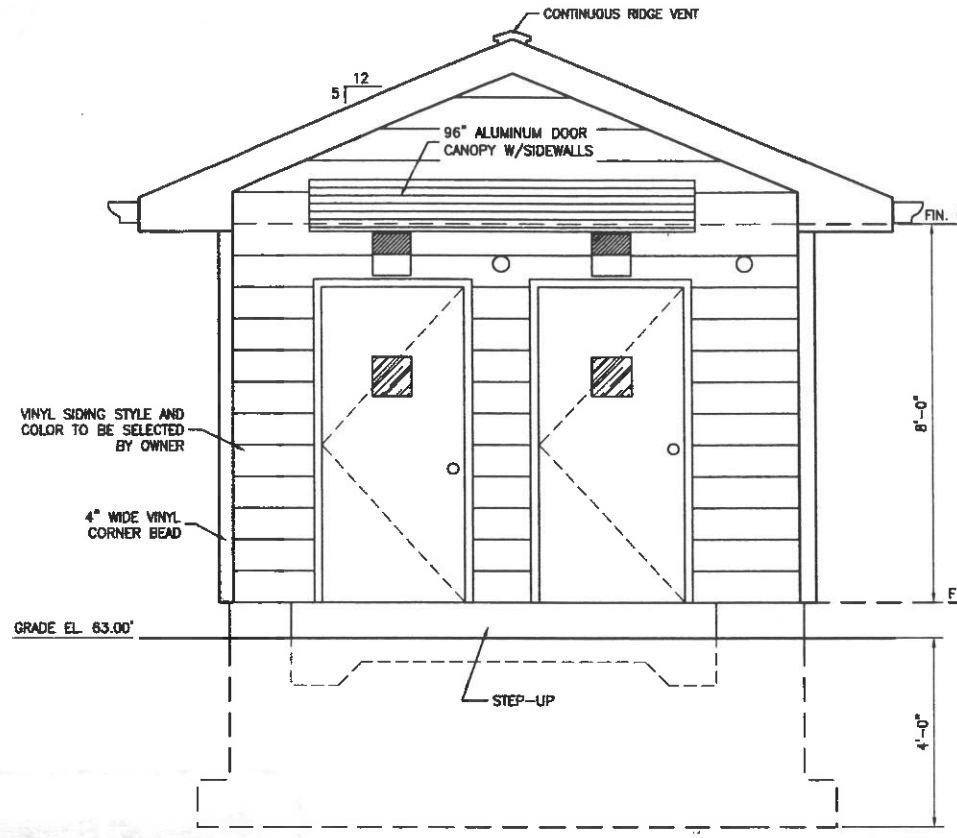

NORTH ELEVATION

SCALE: 1/2"=1'-0"

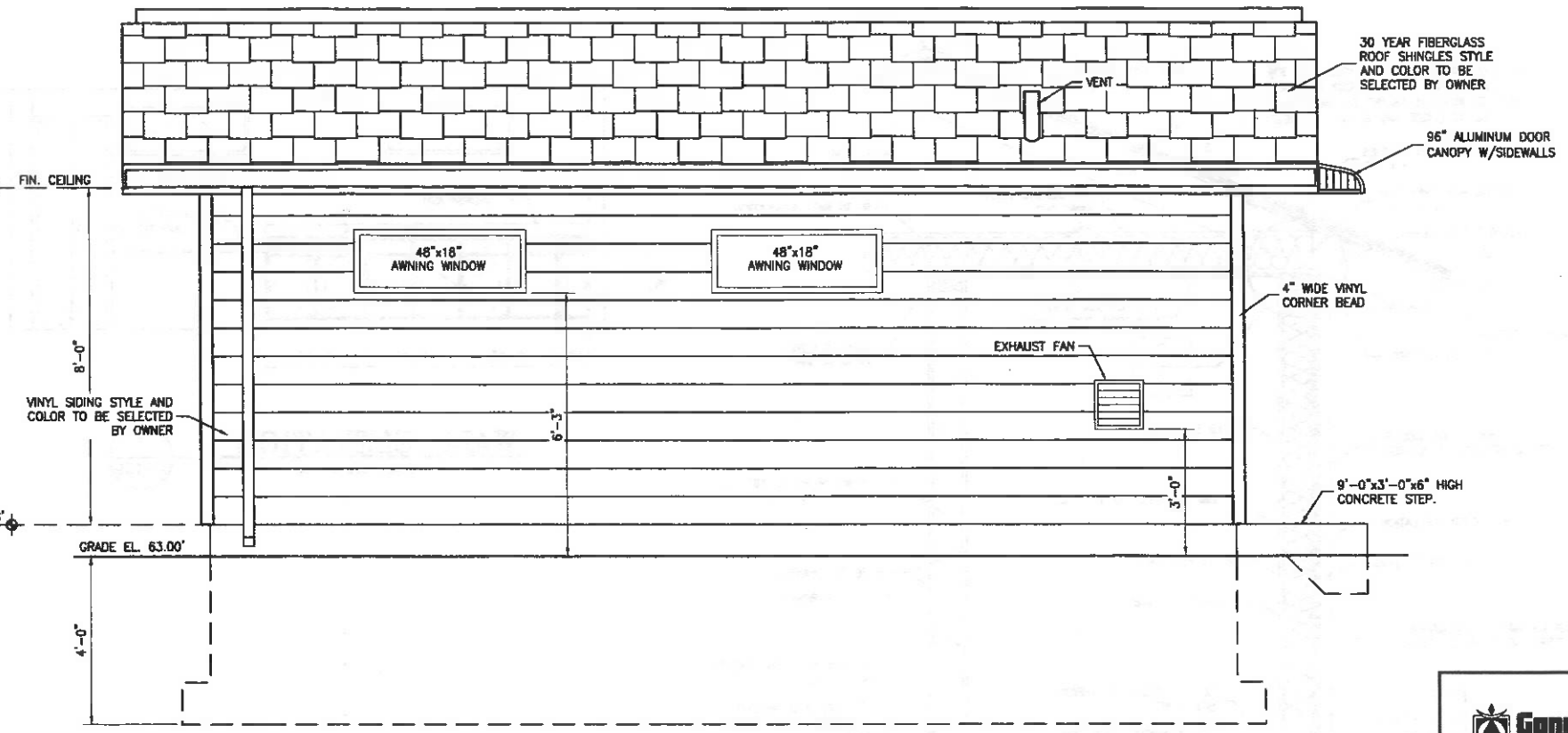

EAST ELEVATION

SCALE: 1/2"=1'-0"

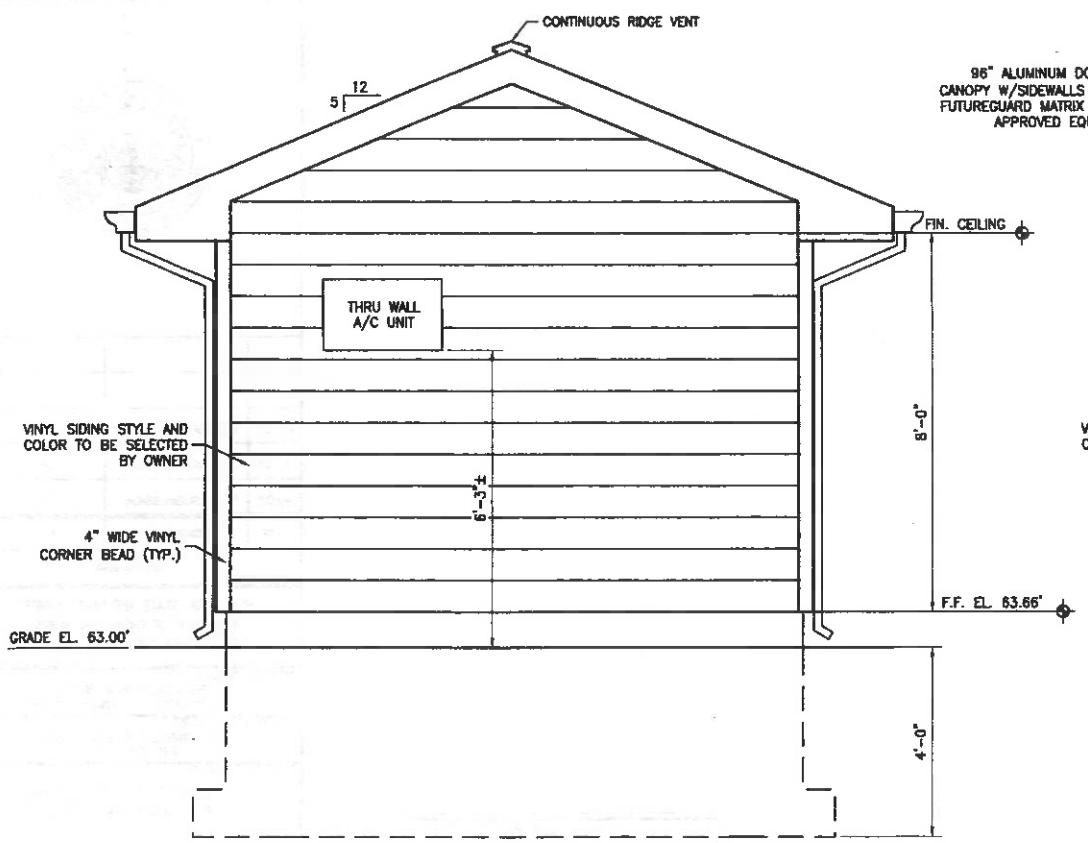

SOUTH ELEVATION

SCALE: 1/2"=1'-0"

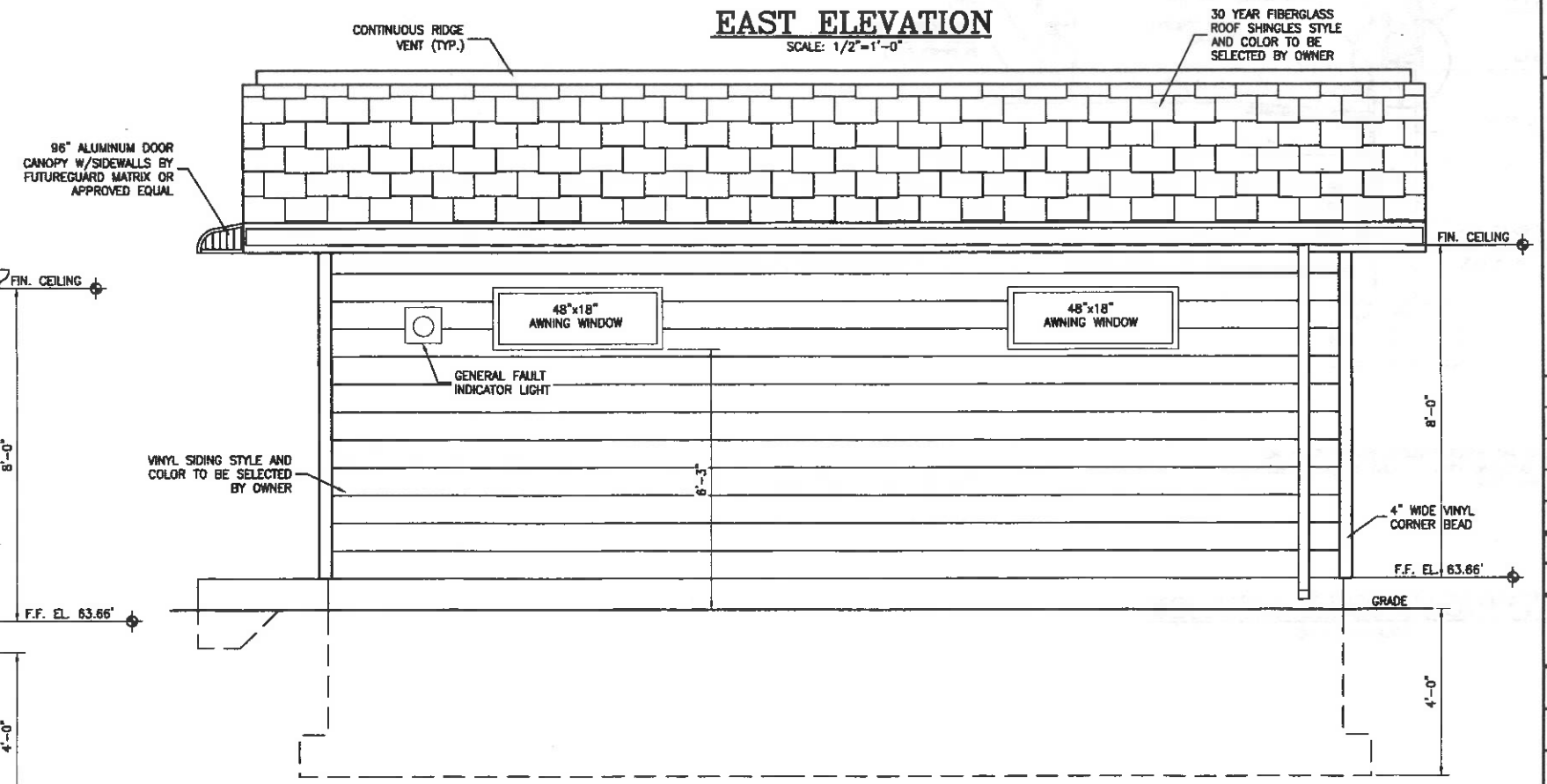

WEST ELEVATION

SCALE: 1/2"=1'-0"

NOTE
SCALE REDUCTION

THESE REDUCED PLANS MAY NOT BE EXACTLY TO SCALE. ALL INDICATED SCALES ARE REDUCED TO APPROXIMATELY HALF SIZE.

0 1 2 3 4

Gannett Fleming ENGINEERS, P.C.

LOCUST VALLEY, NY HARRISBURG, PA

STATE OF NEW YORK · STEPHEN HADJIYANE · 066695 · LICENSED PROFESSIONAL ENGINEER

DATE	DESCRIPTION	BY	SYM.
11/07	GENERAL REVISIONS	SH	2
5/07	GENERAL REVISIONS	SH	1
4/07	REG. SUBMISSION	SH	0

REVISIONS

NEW YORK STATE THRUWAY AUTHORITY
DEPARTMENT OF ENGINEERING SERVICES
200 SOUTHERN BLVD., ALBANY, N.Y. 12209

TITLE OF PROJECT
REHABILITATION OF THE WASTEWATER TREATMENT PLANT

LOCATION OF PROJECT
STORMVILLE SERVICE AREA
M.P. 55.57 W.B.

TITLE OF DRAWING
LABORATORY/CHLORINE BUILDING ARCHITECTURAL ELEVATIONS

NEW YORK STATE THRUWAY AUTHORITY

CONTRACT NUMBER: TANY 08-17A

DATE: 4/23/07

DRAWING NUMBER: A-110

DRAFTED BY: M. Dekay

DESIGNED BY: Eric Fox

CHECKED BY: Peter Greenwald

IN CHARGE OF: Stephen Hadjiyane

12/31/07 1:00pm FILE= K:\PROJECTS\14000\14998\001 (stormville)\dwgs\A-110 arch elevations.dwg by LAWSON SHEET=A-110 TITLE=

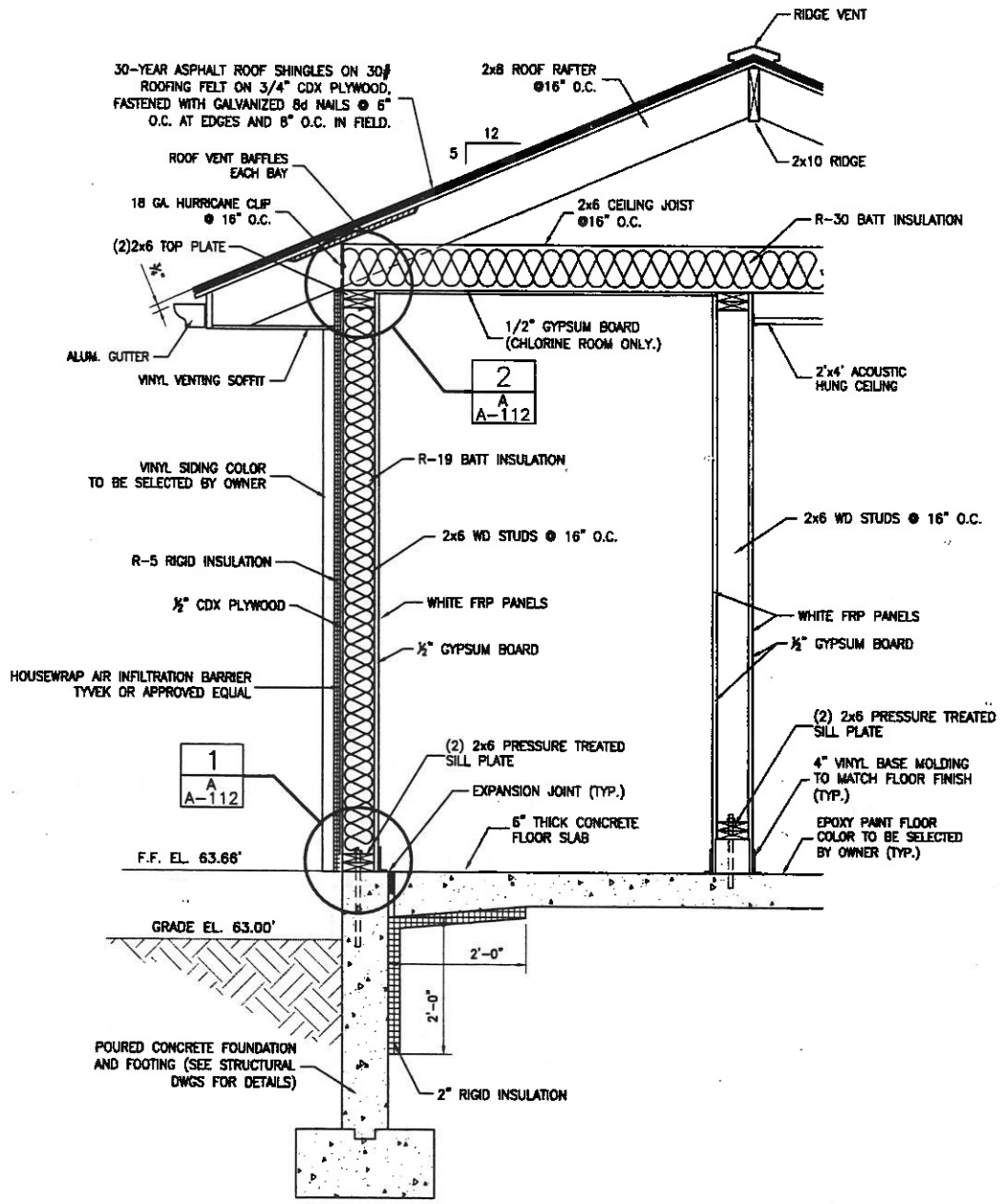

NOTES:

1. PROVIDE ICE AND WATER SHIELD ALONG EAVES (ENTIRE BUILDING) EXTENDING FROM THE EAVE TO 24" BEYOND THE INTERIOR WALL FACE.

TYPICAL WALL SECTION

SCALE: 3/4"=1'-0"

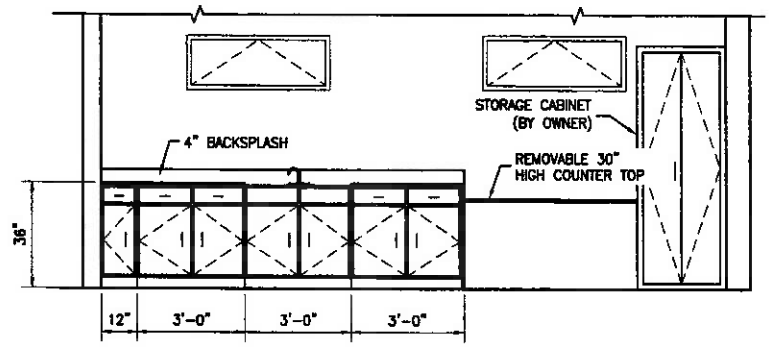

WALL ELEVATION

SCALE: 3/8"=1'-0"

1 A-109

NOTE
SCALE REDUCTION

THESE REDUCED PLANS MAY NOT BE EXACTLY TO SCALE. ALL INDICATED SCALES ARE REDUCED TO APPROXIMATELY HALF SIZE.

0 1 2 3 4

Gannett Fleming ENGINEERS, P.C.

LOCUST VALLEY, NY HARRISBURG, PA

STATE OF NEW YORK STEPHEN HADJYANE 066695 LICENSED PROFESSIONAL ENGINEER

DATE	DESCRIPTION	BY	SYM.
11/07	GENERAL REVISIONS	SH	2
5/07	GENERAL REVISIONS	SH	1
4/07	REG. SUBMISSION	SH	0

REVISIONS

NEW YORK STATE THRUWAY AUTHORITY
DEPARTMENT OF ENGINEERING SERVICES
200 SOUTHERN BLVD., ALBANY, N.Y. 12209

TITLE OF PROJECT
REHABILITATION OF THE WASTEWATER TREATMENT PLANT

LOCATION OF PROJECT
STORMVILLE SERVICE AREA
M.P. 55.57 W.B.

TITLE OF DRAWING
LABORATORY/CHLORINE BUILDING SECTIONS

NEW YORK STATE THRUWAY AUTHORITY

CONTRACT NUMBER: TANY 08-17A

DATE: 4/23/07

DRAWING NUMBER: A-111

CHECKED BY:

DRAFTED BY:

DESIGNED BY:

IN CHARGE OF:

12/31/07 1:01pm FILE: \\PROJECTS\14000's\14999\001 (stormville)\design\A-111 arch sections.dwg by LANGON

NAILING SCHEDULE

DESCRIPTION OF BUILDING ELEMENTS	NUMBER OF COMMON NAILS	NAIL SPACING
ROOF FRAMING		
RAFTER TO TOP PLATE (TOE NAILED)	3–8d	PER RAFTER
CEILING JOIST TO TOP PLATE (TOE–NAILED)	3–8d	PER JOIST
CEILING JOIST TO PARALLEL RAFTER (FACE–NAILED)	6–16d	EACH LAP
CEILING JOIST LAPS OVER PARTITION (FACE–NAILED)	6–16d	EACH LAP
COLLAR TIE TO RAFTER (FACE–NAILED)	2–10d	PER TIE
BLOCKING TO RAFTER (TOE–NAILED)	2–8d	EACH END
RIM BOARD TO RAFTER (END–NAILED)	2–16d	EACH END
WALL FRAMING		
TOP PLATE TO TOP PLATE (FACE–NAILED)	2–16d[1]	PER FOOT
TOP PLATES AT INTERSECTIONS (FACE–NAILED)	4–16d	JOINTS – EACH SIDE
STUD TO STUD (FACE–NAILED)	2–16d	24" O.C.
HEADER TO HEADER (FACE–NAILED)	16d	16" o.c. ALONG EDGES
TOP PLATE OR BOTTOM PLATE TO STUD (END–NAILED)	2–16d	PER 2"x4" STUD
	3–16d	PER 2"x6" STUD
	4–16d	PER 2"x8" STUD
BOTTOM PLATE TO FLOOR JOIST, BANDJOIST, ENDJOIST OR BLOCKING (FACE–NAILED)	2–16d[1,2]	PER FOOT
ROOF SHEATHING		
STRUCTURAL PANELS	8d	6" EDGE / 12" FIELD
DIAGONAL BOARD SHEATHING		
1"x6" or 1"x8"	2–8d	PER SUPPORT
1"x10" or WIDER	3–8d	PER SUPPORT
WALL SHEATHING		
STRUCTURAL PANELS	8d	6" EDGE / 12" FIELD
FIBERBOARD PANELS		
7/16"	6d	3" EDGE / 6" FIELD
25/32"	8d	3" EDGE / 6" FIELD
GYPSUM WALLBOARD	5d COOLERS	7" EDGE / 10" FIELD
HARDBOARD	8d	6" EDGE / 12" FIELD
PARTICLEBOARD PANELS	8d	6" EDGE / 12" FIELD
DIAGONAL BOARD SHEATHING		
1"x6" or 1"x8"	2–8d	PER SUPPORT
1"x10" or WIDER	3–8d	PER SUPPORT

1. NAILING REQUIREMENTS ARE BASED ON WALL SHEATHING NAILED 6 INCHES ON–CENTER AT THE PANEL EDGE. IF WALL SHEATHING IS NAILED 3 INCHES ON–CENTER AT THE PANEL EDGE TO OBTAIN HIGHER SHEAR CAPACITIES, NAILING REQUIREMENTS FOR STRUCTURAL MEMBERS SHALL BE DOUBLED, OR ALTERNATE CONNECTORS, SUCH AS SHEAR PLATES, SHALL BE USED TO MAINTAIN THE LOAD PATH.
2. WHEN WALL SHEATHING IS CONTINUOUS OVER CONNECTED MEMBERS, THE TABULATED NUMBER OF NAILS SHALL BE PERMITTED TO BE REDUCED TO 1–16d NAIL PER FOOT.

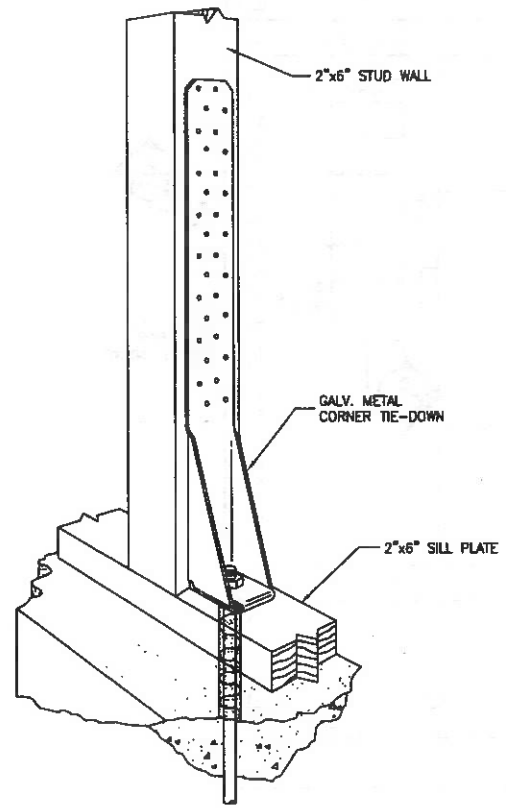

CORNER TIE–DOWN DETAIL

TO BE PROVIDED AT EACH CORNER
N.T.S.

1 / A / A–111

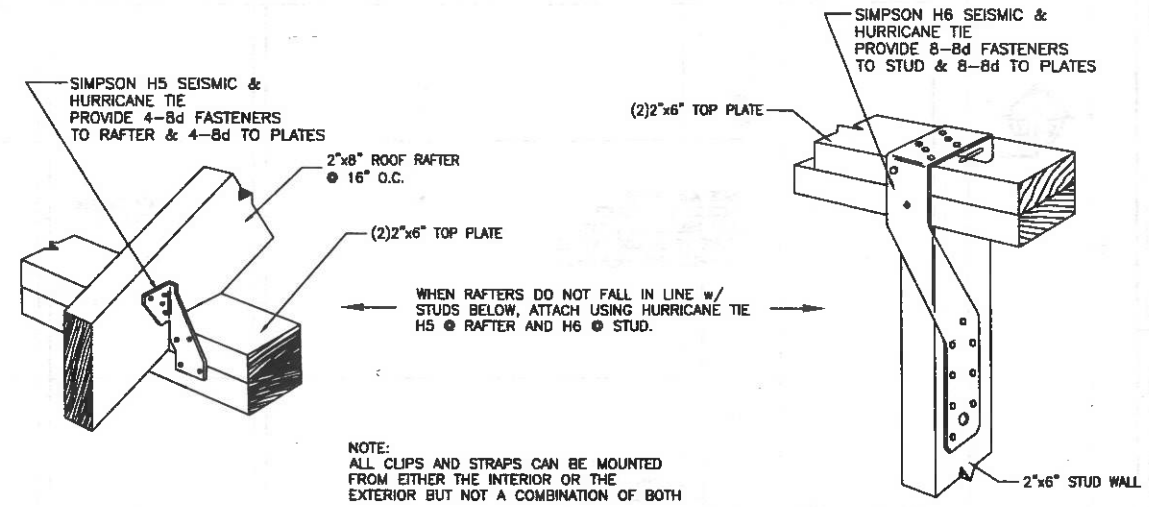

NOTE:
ALL CLIPS AND STRAPS CAN BE MOUNTED FROM EITHER THE INTERIOR OR THE EXTERIOR BUT NOT A COMBINATION OF BOTH

HURRICANE CLIP DETAIL

N.T.S.

2 / A / A–111

NOTE
SCALE REDUCTION
THESE REDUCED PLANS MAY NOT BE EXACTLY TO SCALE. ALL INDICATED SCALES ARE REDUCED TO APPROXIMATELY HALF SIZE.

0 1 2 3 4

Gannett Fleming ENGINEERS, P.C.
LOCUST VALLEY, NY HARRISBURG, PA

STATE OF NEW YORK · STEPHEN HADJIJANE · 086695 · LICENSED PROFESSIONAL ENGINEER

DATE	DESCRIPTION	BY	SYM.
11/07	GENERAL REVISIONS	SH	2
5/07	GENERAL REVISIONS	SH	1
4/07	REG. SUBMISSION	SH	0

REVISIONS

NEW YORK STATE THRUWAY AUTHORITY
DEPARTMENT OF ENGINEERING SERVICES
200 SOUTHERN BLVD., ALBANY, N.Y. 12209

TITLE OF PROJECT: REHABILITATION OF THE WASTEWATER TREATMENT PLANT
LOCATION OF PROJECT: STORMVILLE SERVICE AREA M.P. 55.57 W.B.
TITLE OF DRAWING: LABORATORY/CHLORINE BUILDING ARCHITECTURAL DETAILS

NEW YORK STATE THRUWAY AUTHORITY

CONTRACT NUMBER: TANY 08–17A
DATE: 4/23/07
DRAWING NUMBER: A–112

DRAFTED BY: M. Dougherty
CHECKED BY: Peter Greenhalgh
DESIGNED BY:
IN CHARGE OF:
12/21/07 1:00pm FILE= K:\PROJECTS\4400\A\4690\201 (Normville)\design\A-112 arch details.dwg by LANSON

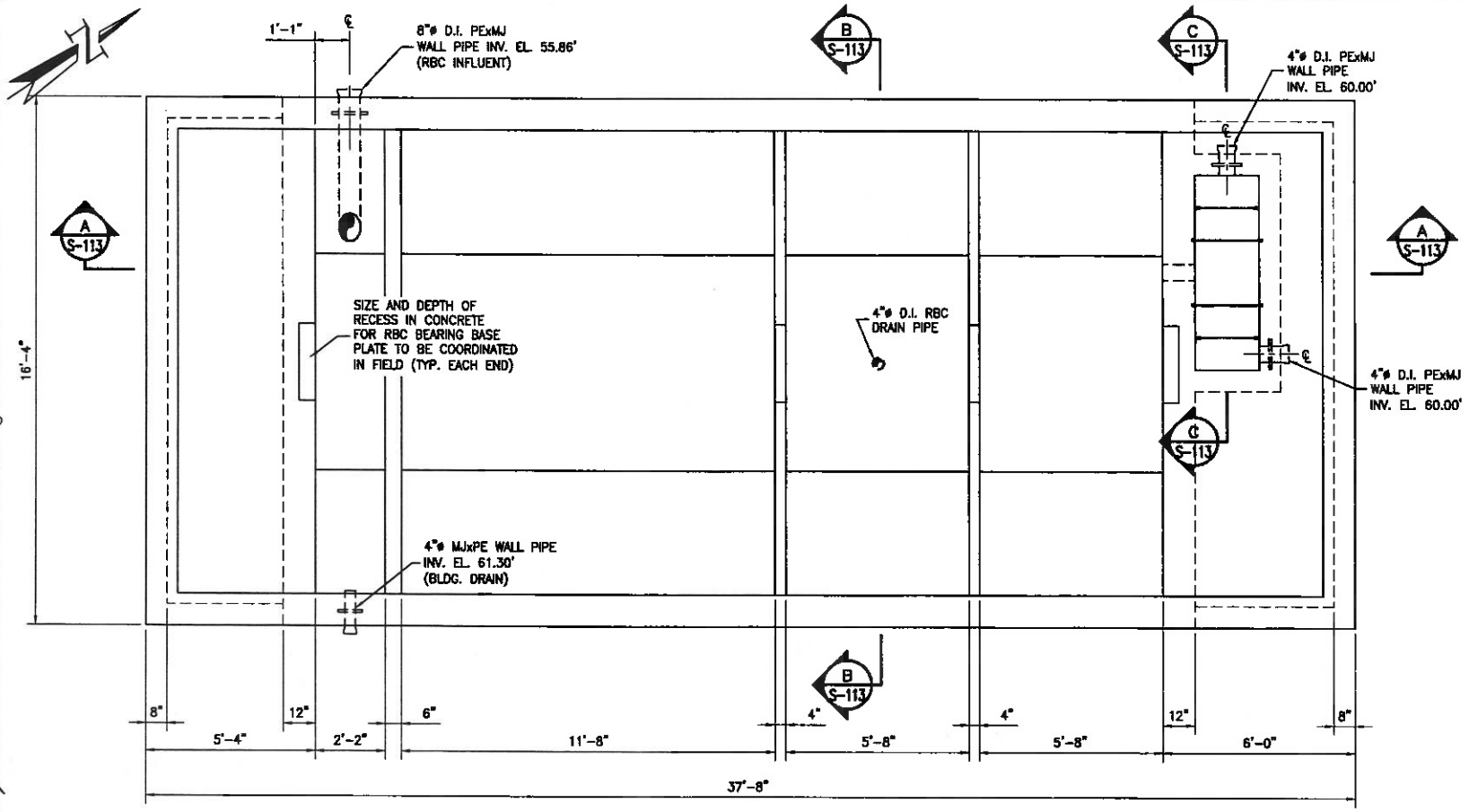

RBC STRUCTURAL PLAN

SCALE: 3/8"=1'-0"

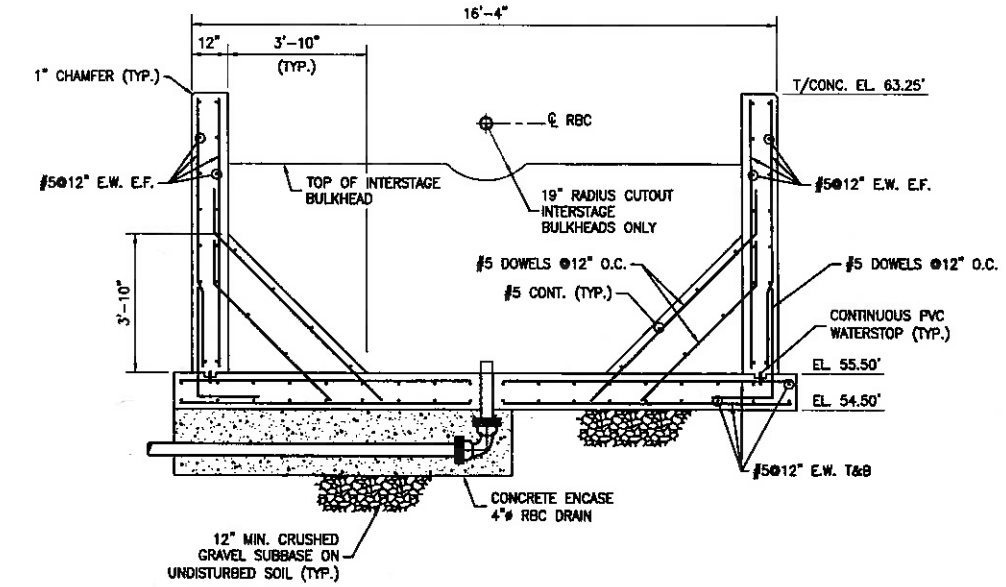

SECTION B S-113

SCALE: 3/8"=1'-0"

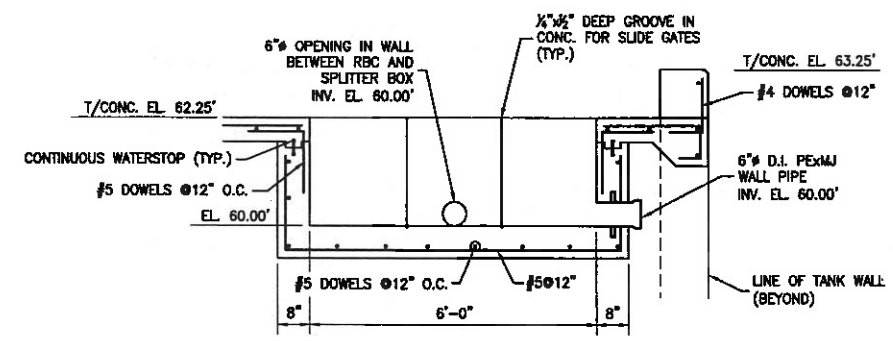

SECTION C S-113

SCALE: 1/2"=1'-0"

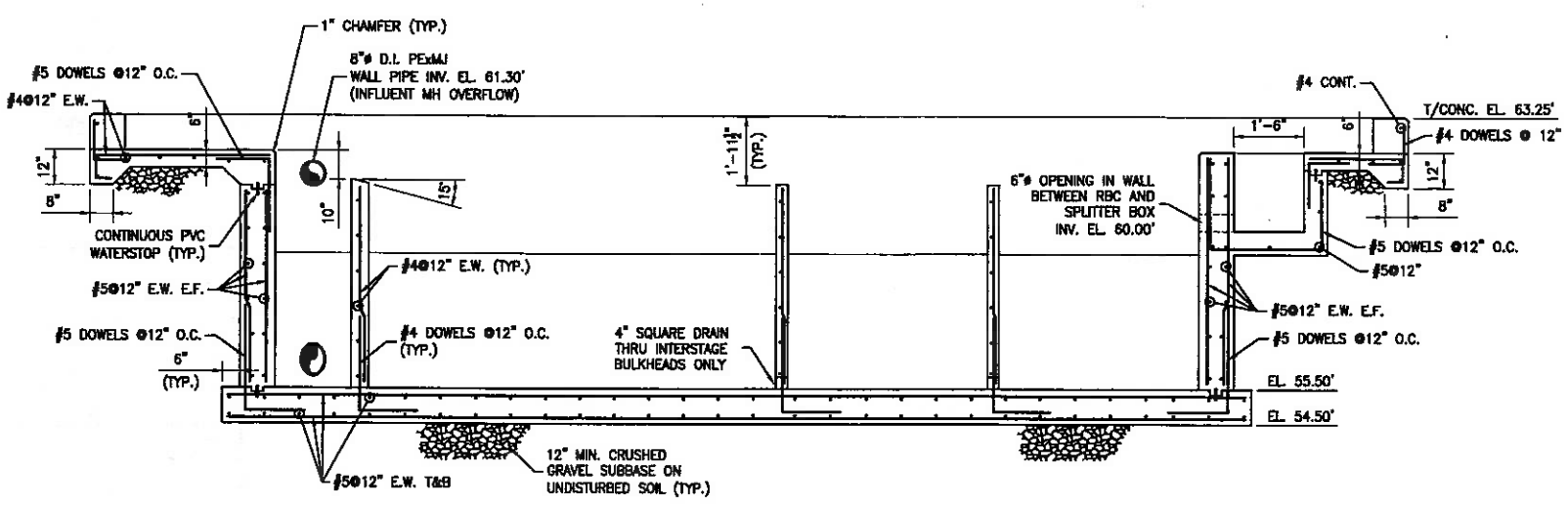

SECTION A S-113

SCALE: 3/8"=1'-0"

NOTE:

1. ALL REBARS SHALL BE GALVANIZED

NOTE
SCALE REDUCTION

THESE REDUCED PLANS MAY NOT BE EXACTLY TO SCALE. ALL INDICATED SCALES ARE REDUCED TO APPROXIMATELY HALF SIZE.

0 1 2 3 4

Gannett Fleming ENGINEERS, P.C.

LOCUST VALLEY, NY HARRISBURG, PA

STATE OF NEW YORK · STEPHEN HADJYANI · 086895 · LICENSED PROFESSIONAL ENGINEER

DATE	DESCRIPTION	BY	SYM.
11/07	GENERAL REVISIONS	SH	2
5/07	GENERAL REVISIONS	SH	1
4/07	REG. SUBMISSION	SH	0

REVISIONS

NEW YORK STATE THRUWAY AUTHORITY
DEPARTMENT OF ENGINEERING SERVICES
200 SOUTHERN BLVD., ALBANY, N.Y. 12209

TITLE OF PROJECT: REHABILITATION OF THE WASTEWATER TREATMENT PLANT

LOCATION OF PROJECT: STORMVILLE SERVICE AREA M.P. 55.57 W.B.

TITLE OF DRAWING: RBC STRUCTURAL PLAN AND SECTIONS

NEW YORK STATE THRUWAY AUTHORITY

CONTRACT NUMBER: TANY 08-17A

DATE: 4/23/07

DRAWING NUMBER: S-113

CHECKED BY: M. Dobosz

DRAFTED BY:

DESIGNED BY:

IN CHARGE OF:

12/31/07 2:59pm FILE= K:\PROJECTS\41000\A\44989\001 (dbormvic)\design\S-113.DWG Plot-dwg by LMASON XREF=xsurvey

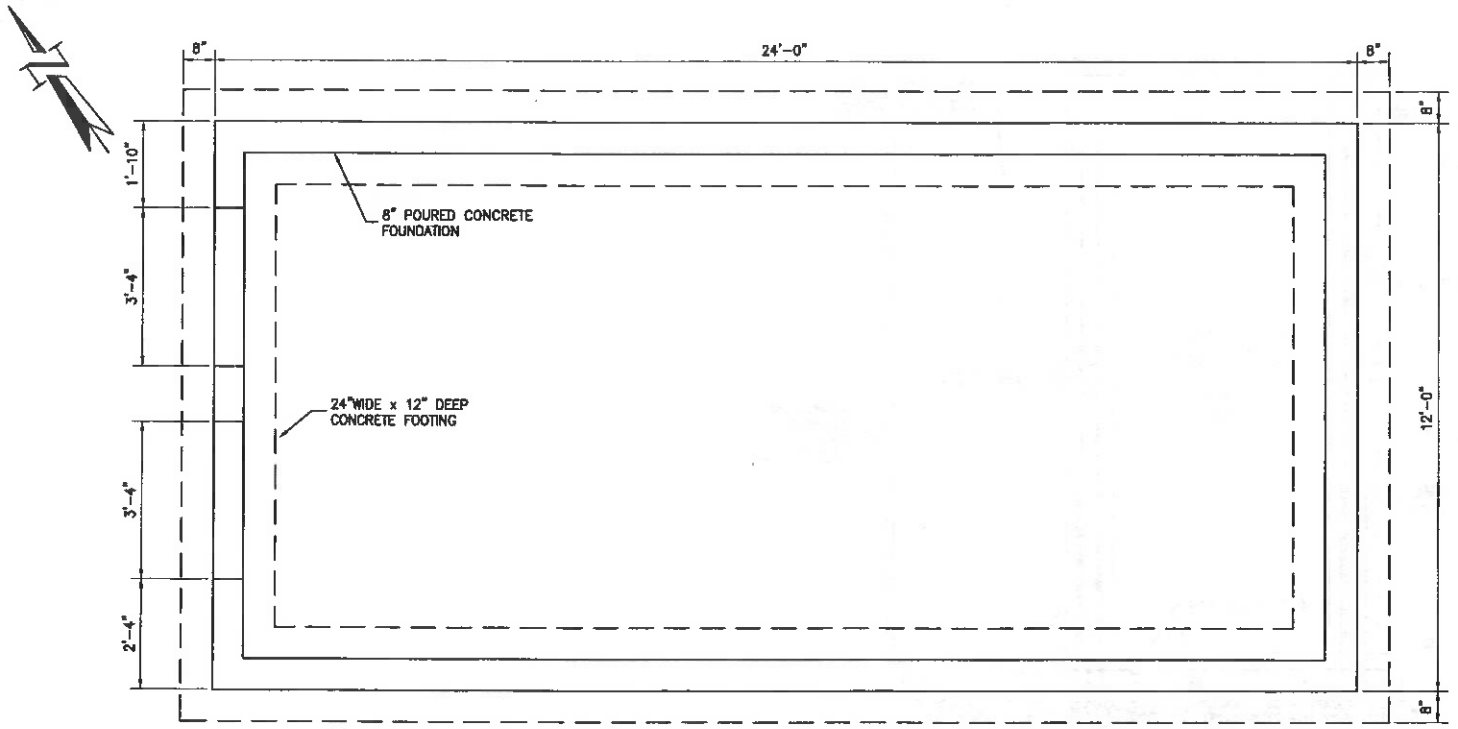

FOUNDATION PLAN

SCALE: 1/2"=1'-0"

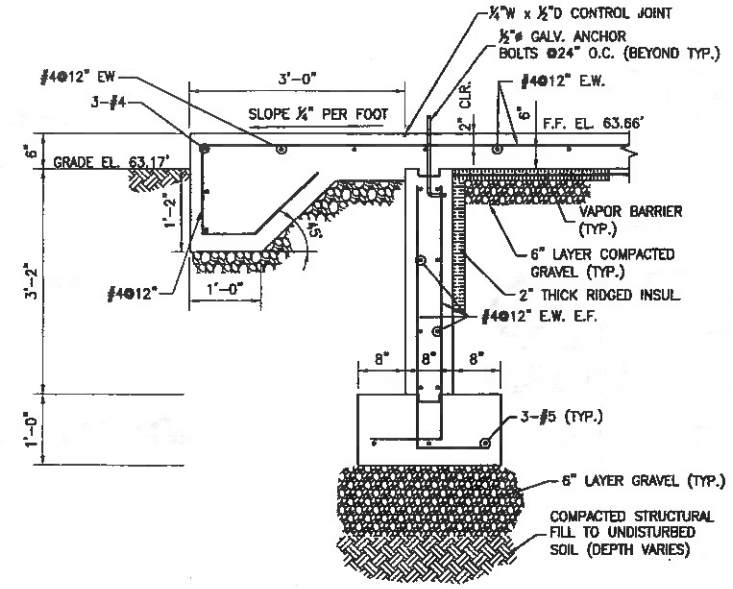

NOTE:
TYPICAL AT ALL DOORWAYS.

SECTION A S-114

SCALE: 3/4"=1'-0"

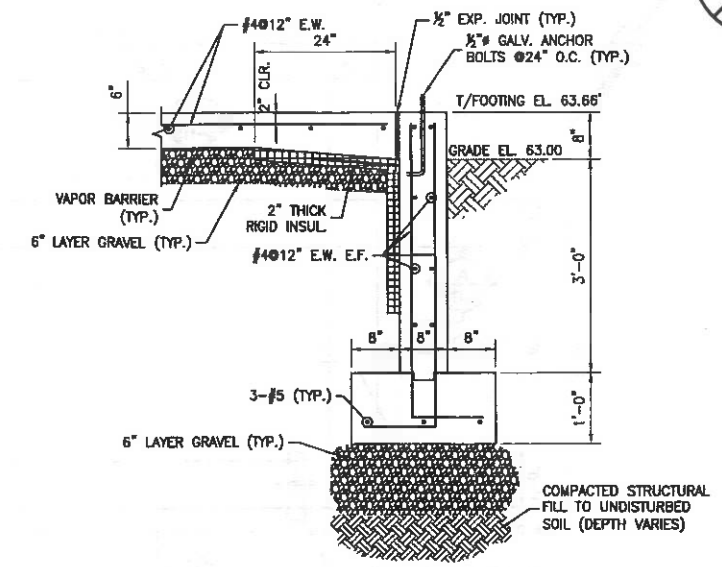

NOTE:
TYPICAL FOR ALL LOCATIONS EXCEPT DOORWAYS.

SECTION B S-114

SCALE: 3/4"=1'-0"

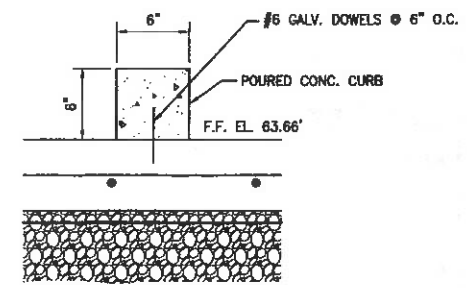

SECTION C S-114

N.T.S.

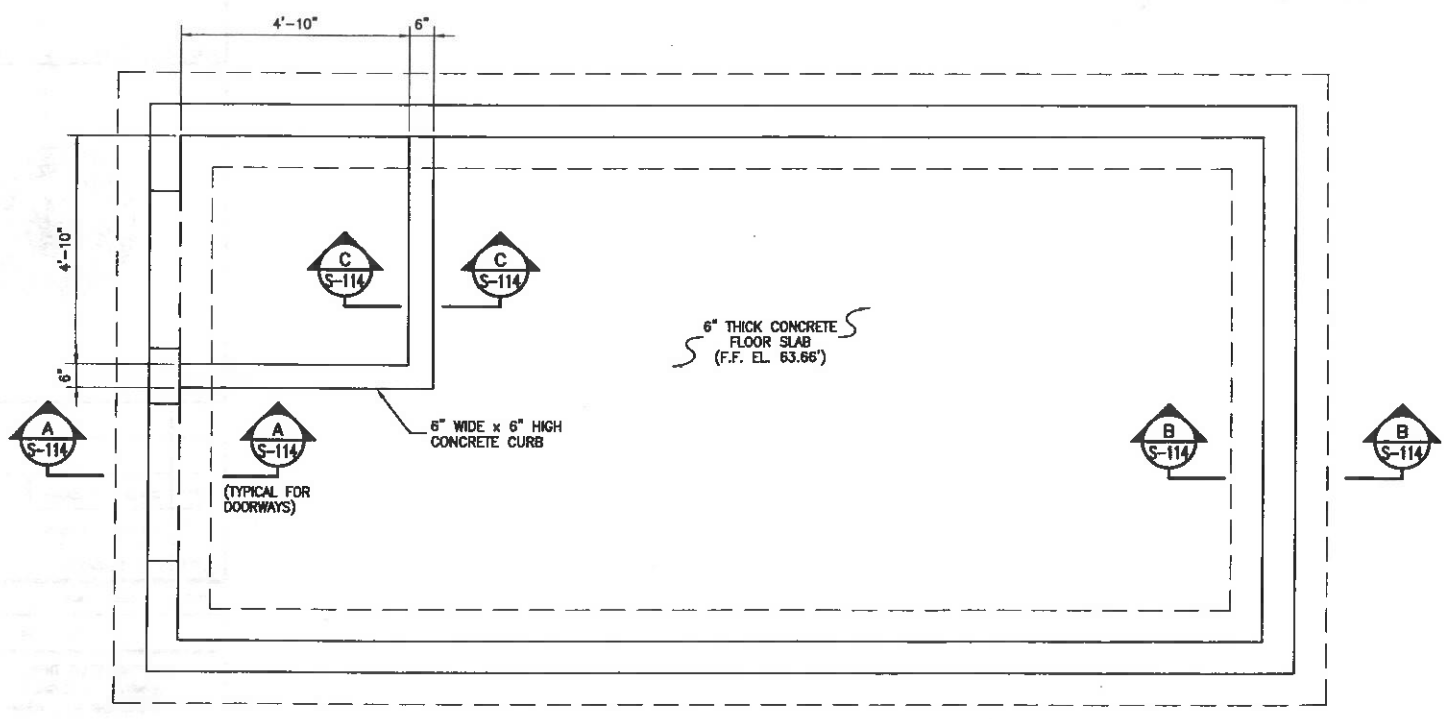

FLOOR SLAB PLAN

SCALE: 1/2"=1'-0"

NOTES:

1. HAUNCH ON THREE SIDES.
2. ALL REBAR: TOP AND SIDE BARS ARE TO BE 2" CLEAR FROM EDGE, BOTTOM BARS ARE TO BE 3" CLEAR FROM EDGE.
3. ALL REBARS SHALL BE GALVANIZED.
4. POUR STEP MONOLITHICALLY WITH FLOOR.
5. RAISE GRADE AROUND STEP TO PROVIDE 6" REVEAL.

NOTE
SCALE REDUCTION

THESE REDUCED PLANS MAY NOT BE EXACTLY TO SCALE. ALL INDICATED SCALES ARE REDUCED TO APPROXIMATELY HALF SIZE.

0 1 2 3 4

Gannett Fleming
ENGINEERS, P.C.

LOCUST VALLEY, NY HARRISBURG, PA

STATE OF NEW YORK · STEPHEN HADJITAFE · 086695 · LICENSED PROFESSIONAL ENGINEER

DATE	DESCRIPTION	BY	SYM.
11/07	GENERAL REVISIONS	SH	2
5/07	GENERAL REVISIONS	SH	1
4/07	REG. SUBMISSION	SH	0

REVISIONS

NEW YORK STATE THRUWAY AUTHORITY
DEPARTMENT OF ENGINEERING SERVICES
200 SOUTHERN BLVD., ALBANY, N.Y. 12209

TITLE OF PROJECT
REHABILITATION OF THE WASTEWATER TREATMENT PLANT

LOCATION OF PROJECT
STORMVILLE SERVICE AREA
M.P. 55.57 W.B.

TITLE OF DRAWING
LABORATORY/CHLORINE BUILDING STRUCTURAL PLANS AND SECTIONS

NEW YORK STATE THRUWAY AUTHORITY

CONTRACT NUMBER: TANY 08-17A

DATE: 4/23/07

DRAWING NUMBER: S-114

CHECKED BY: Peter Gronwald

DRAFTED BY: M. Doherty

DESIGNED BY:

IN CHARGE OF:

12/31/07 3:00pm FILE= K:\PROJECTS\44000's\44898\001 (Stormville)\design\S-114 bldg structural.dwg by MOONDRY XREF(S)=NONE TITLE

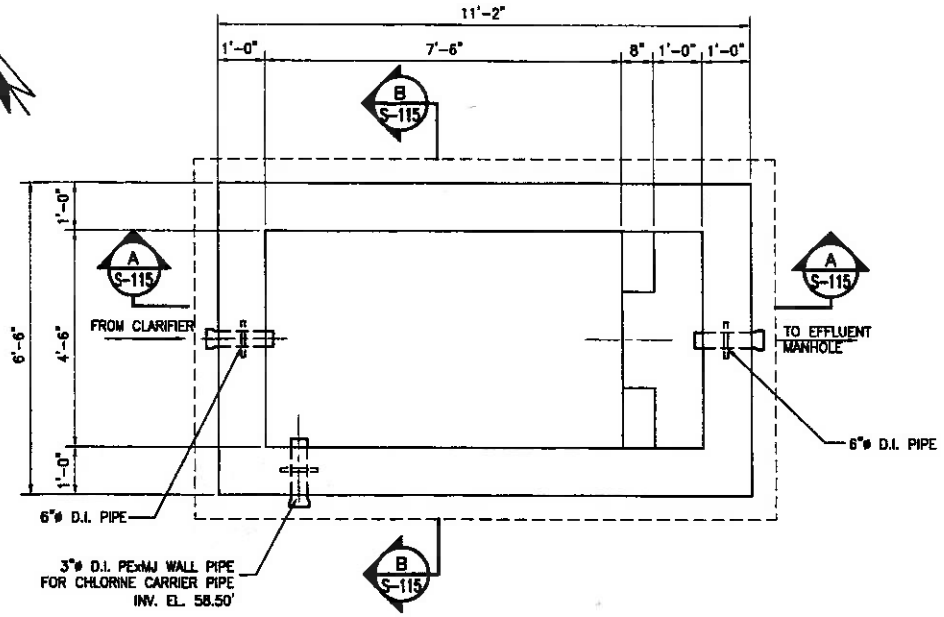

STRUCTURAL PLAN

SCALE: 1/2"=1'-0"

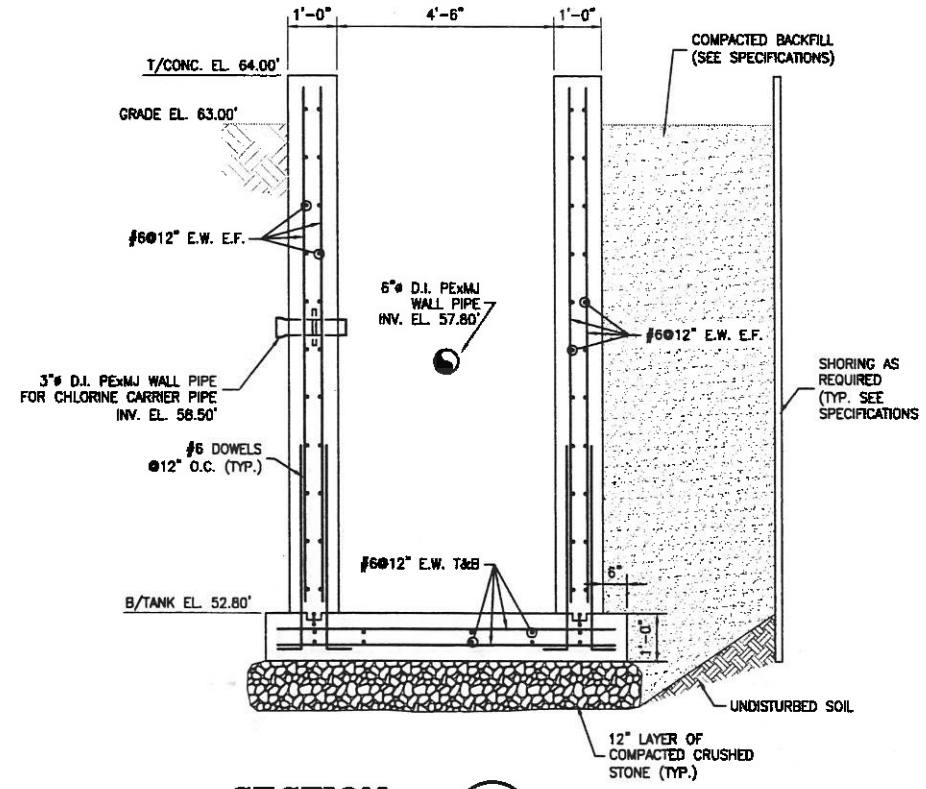

SECTION B S-115

SCALE: 1/2"=1'-0"

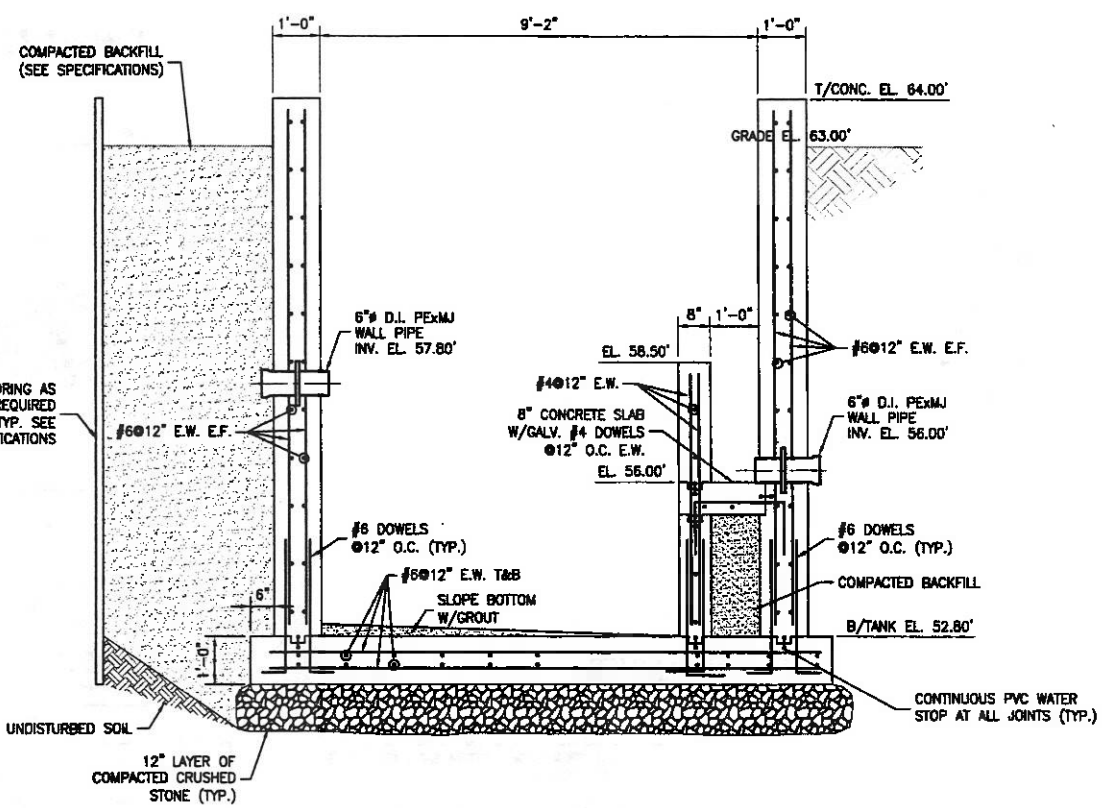

SECTION A S-115

SCALE: 1/2"=1'-0"

NOTE:

1. ALL REBARS SHALL BE GALVANIZED

NOTE
SCALE REDUCTION

THESE REDUCED PLANS MAY NOT BE EXACTLY TO SCALE. ALL INDICATED SCALES ARE REDUCED TO APPROXIMATELY HALF SIZE.

0 1 2 3 4

Gannett Fleming
ENGINEERS, P.C.

LOCUST VALLEY, NY HARRISBURG, PA

STATE OF NEW YORK · STEPHEN HADJITAKE · 056655 · LICENSED PROFESSIONAL ENGINEER

DATE	DESCRIPTION	BY	SYM.
11/07	GENERAL REVISIONS	SH	2
5/07	GENERAL REVISIONS	SH	1
4/07	REG. SUBMISSION	SH	0

REVISIONS

NEW YORK STATE THRUWAY AUTHORITY
DEPARTMENT OF ENGINEERING SERVICES
200 SOUTHERN BLVD., ALBANY, N.Y. 12209

TITLE OF PROJECT
REHABILITATION OF THE WASTEWATER TREATMENT PLANT

LOCATION OF PROJECT
STORMVILLE SERVICE AREA
M.P. 55.57 W.B.

TITLE OF DRAWING
CHLORINE CONTACT TANK STRUCTURAL PLAN AND SECTIONS

NEW YORK STATE THRUWAY AUTHORITY

CONTRACT NUMBER: TANY 08-17A

DATE: 4/23/07

DRAWING NUMBER: S-115

DRAFTED BY: M. Dekay
DESIGNED BY:
CHECKED BY:
IN CHARGE OF:
12/21/07 1:37pm FILE= K:\PROJECTS\44000\44989\001 (alternative)\design\S-115 CCT structural.dwg by LMASON XREF=

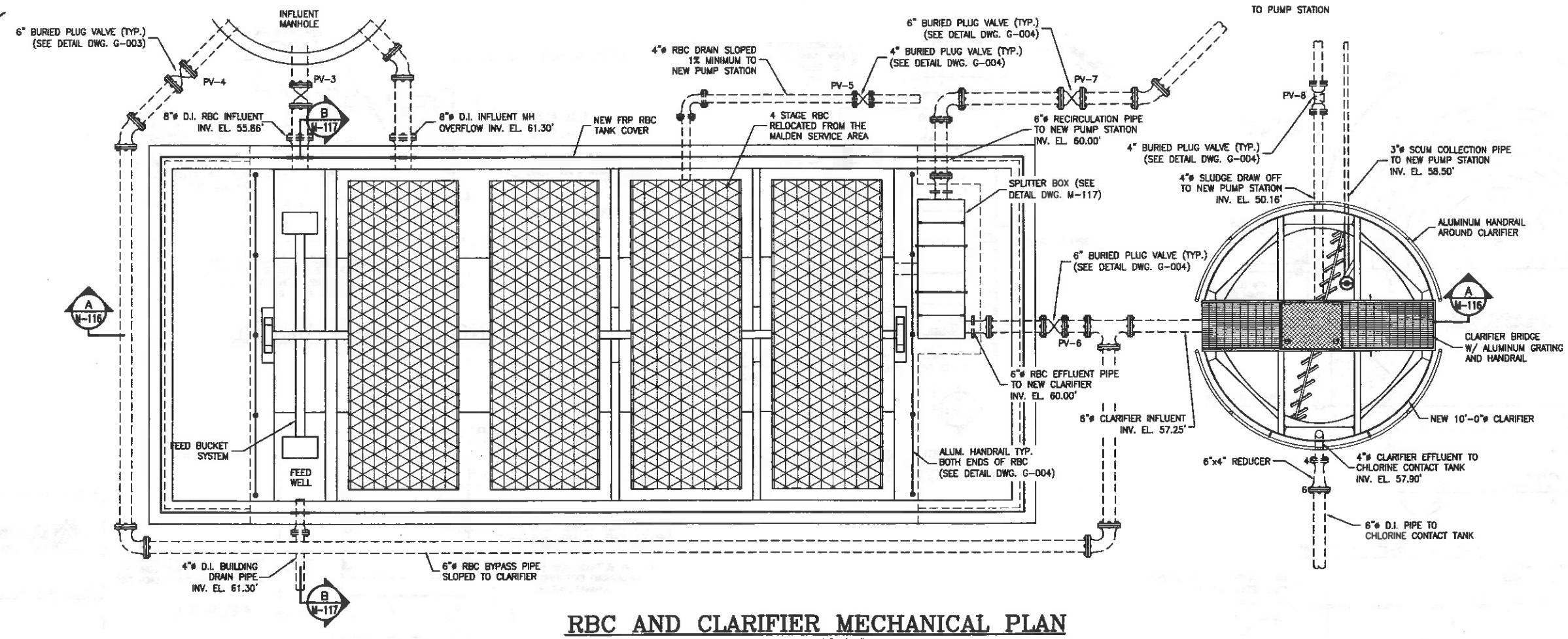

RBC AND CLARIFIER MECHANICAL PLAN

SCALE: 3/8"=1'-0"

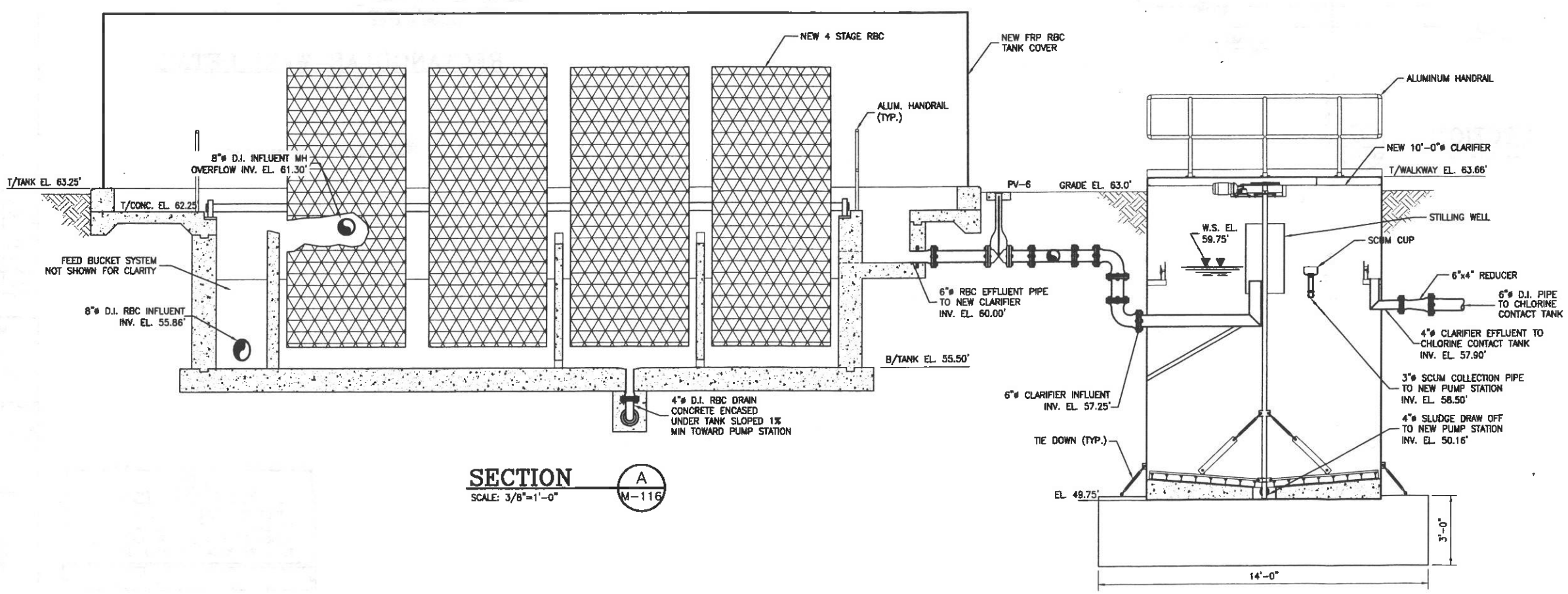

SECTION A M-116

SCALE: 3/8"=1'-0"

NOTE
SCALE REDUCTION

THESE REDUCED PLANS MAY NOT BE EXACTLY TO SCALE. ALL INDICATED SCALES ARE REDUCED TO APPROXIMATELY HALF SIZE.

0 1 2 3 4

Gannett Fleming ENGINEERS, P.C.

LOCUST VALLEY, NY HARRISBURG, PA

STATE OF NEW YORK STEPHEN HADJIANE 026695 LICENSED PROFESSIONAL ENGINEER

DATE	DESCRIPTION	BY	SYM.
11/07	GENERAL REVISIONS	SH	2
5/07	GENERAL REVISIONS	SH	1
4/07	REG. SUBMISSION	SH	0

REVISIONS

NEW YORK STATE THRUWAY AUTHORITY
DEPARTMENT OF ENGINEERING SERVICES
200 SOUTHERN BLVD., ALBANY, N.Y. 12209

TITLE OF PROJECT: REHABILITATION OF THE WASTEWATER TREATMENT PLANT

LOCATION OF PROJECT: STORMVILLE SERVICE AREA M.P. 55.57 W.B.

TITLE OF DRAWING: RBC AND CLARIFIER MECHANICAL PLAN AND SECTION

NEW YORK STATE THRUWAY AUTHORITY

CONTRACT NUMBER: TANY 08-17A

DATE: 4/23/07

DRAWING NUMBER: M-116

DRAFTED BY: M. Dobsky

CHECKED BY: Peter Grunsland

DESIGNED BY:

IN CHARGE OF:

12/21/07 1:39pm

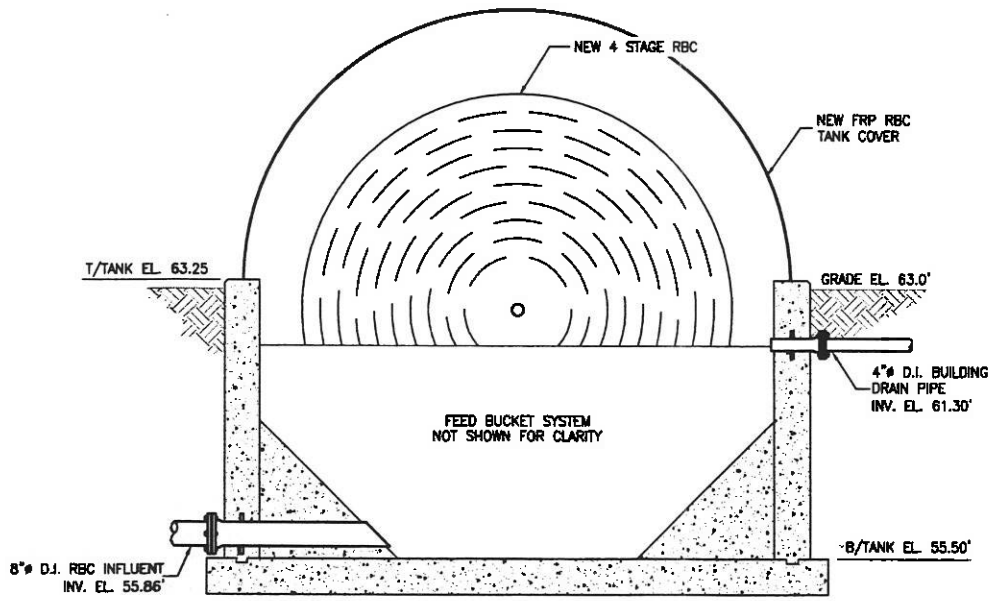

SECTION B/M-116

SCALE: 3/8"=1'-0"

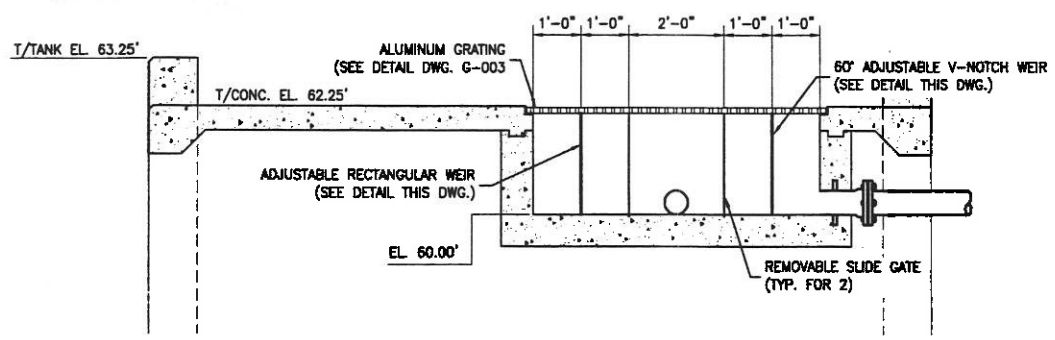

SECTION C/M-117

SCALE: 3/8"=1'-0"

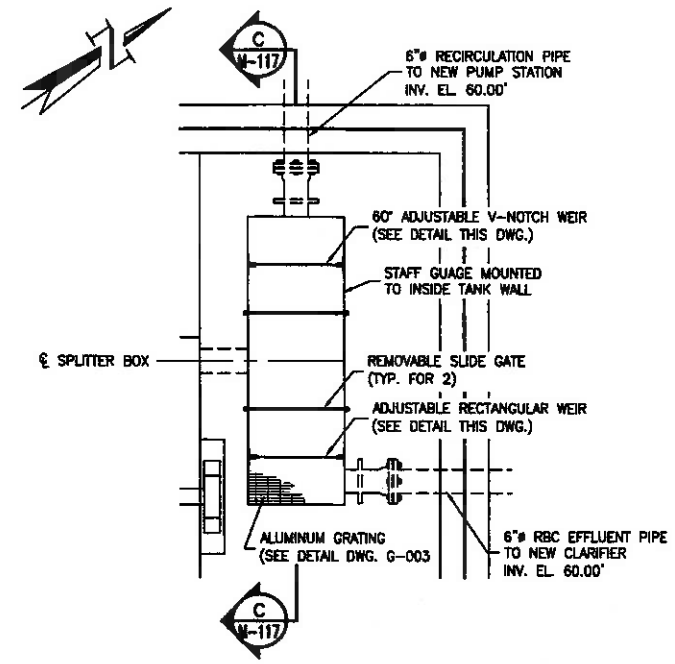

SPLITTER BOX PLAN

SCALE: 1/2"=1'-0"

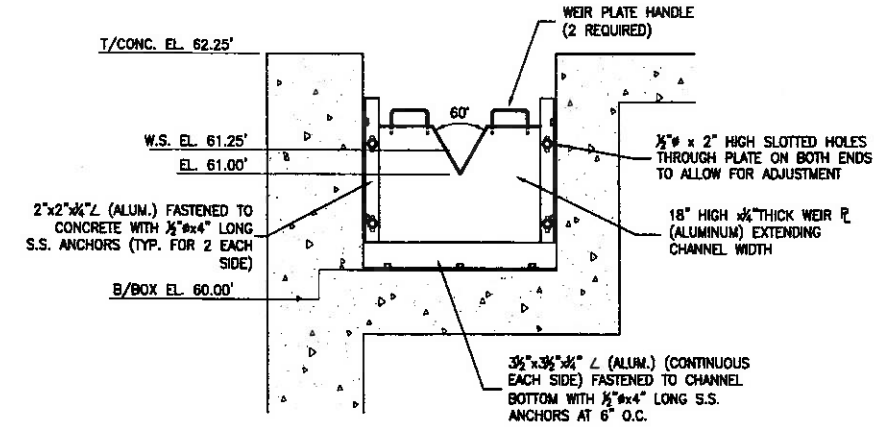

V-NOTCH WEIR DETAIL

SCALE: 1"=1'-0"

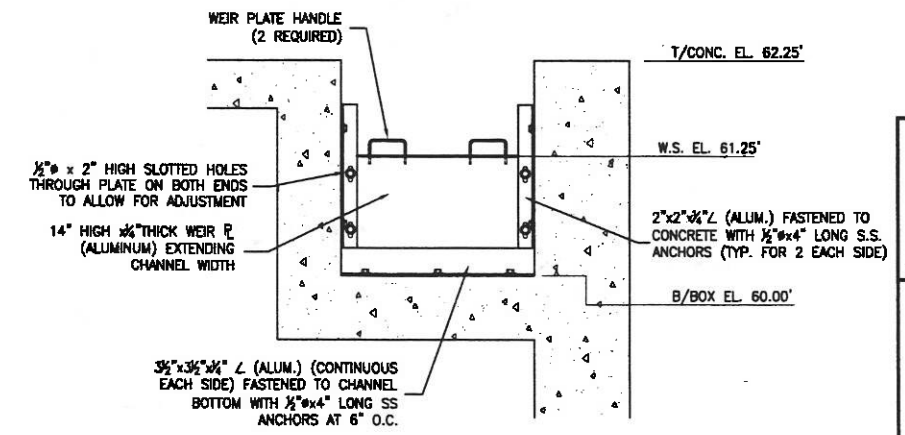

RECTANGULAR WEIR DETAIL

SCALE: 1"=1'-0"

NOTE:
PROVIDE GASKETS BETWEEN DISSIMILAR METALS.

NOTE
SCALE REDUCTION

THESE REDUCED PLANS MAY NOT BE EXACTLY TO SCALE. ALL INDICATED SCALES ARE REDUCED TO APPROXIMATELY HALF SIZE.

0 1 2 3 4

Gannett Fleming
ENGINEERS, P.C.
LOCUST VALLEY, NY HARRISBURG, PA

STATE OF NEW YORK · STEPHEN HADJIYANE · 086997 · LICENSED PROFESSIONAL ENGINEER

DATE	DESCRIPTION	BY	SYM.
11/07	GENERAL REVISIONS	SH	2
5/07	GENERAL REVISIONS	SH	1
4/07	REG. SUBMISSION	SH	0

REVISIONS

NEW YORK STATE THRUWAY AUTHORITY
DEPARTMENT OF ENGINEERING SERVICES
200 SOUTHERN BLVD., ALBANY, N.Y. 12209

TITLE OF PROJECT
REHABILITATION OF THE WASTEWATER TREATMENT PLANT

LOCATION OF PROJECT
STORMVILLE SERVICE AREA
M.P. 55.57 W.B.

TITLE OF DRAWING
RBC MECHANICAL SECTIONS AND DETAILS

NEW YORK STATE THRUWAY AUTHORITY

CONTRACT NUMBER: TANY 08-17A
DATE: 4/23/07
DRAWING NUMBER: M-117

DRAFTED BY: M. Doherty
CHECKED BY: John Greenfield
DESIGNED BY:
IN CHARGE OF:

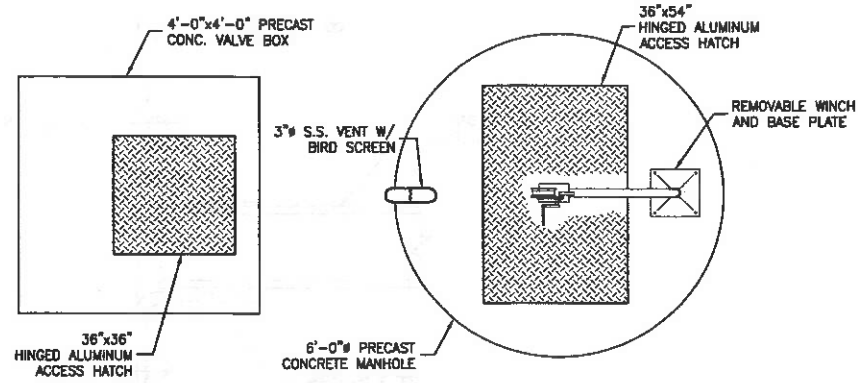

PUMP STATION PLAN

SCALE: 1/2"=1'-0"

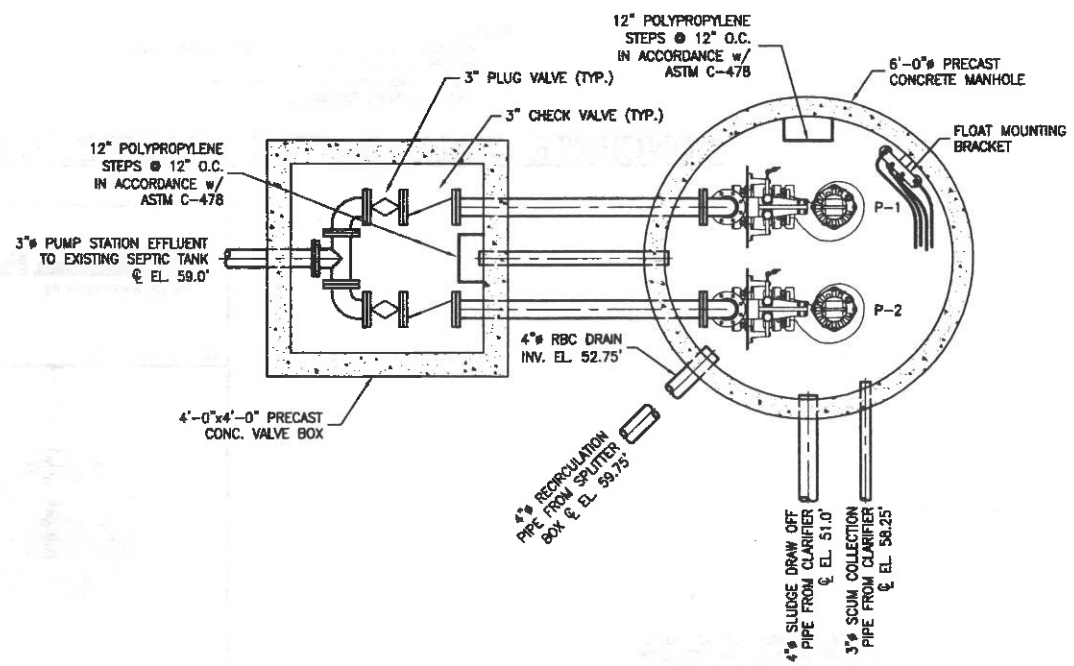

PUMP STATION SECTIONAL PLAN

SCALE: 1/2"=1'-0"

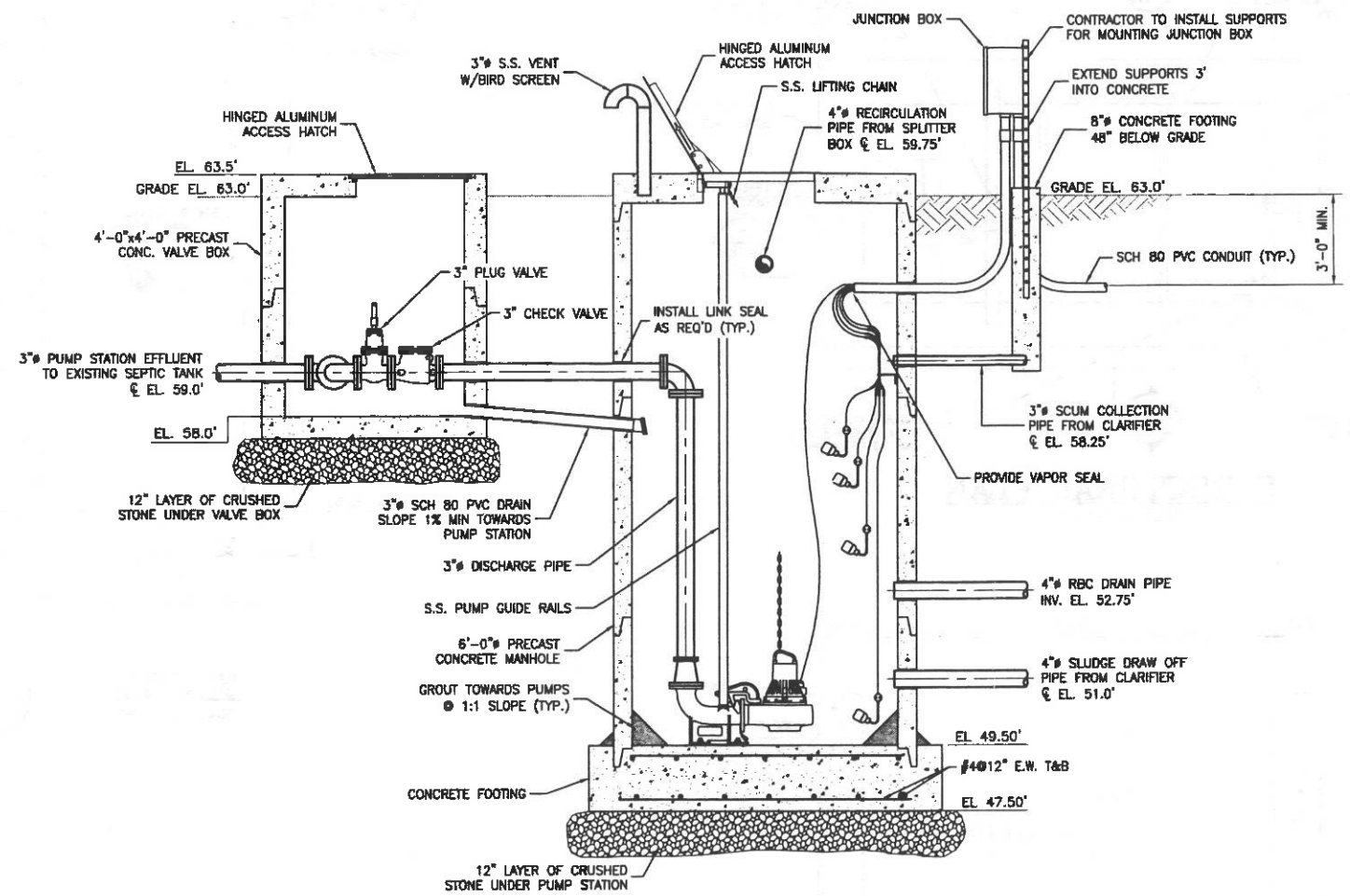

NOTES:
1. BOTTOM OF MANHOLE MUST HAVE SMOOTH TROWELED SURFACE FOR MOUNTING SUPPORT CASTING.
2. PROVIDE FLOAT ADJUSTMENT WITHOUT ENTRY INTO PUMP STATION.

PUMP STATION ELEVATION

SCALE: 1/2"=1'-0"

NOTE
SCALE REDUCTION
THESE REDUCED PLANS MAY NOT BE EXACTLY TO SCALE. ALL INDICATED SCALES ARE REDUCED TO APPROXIMATELY HALF SIZE.

0 1 2 3 4

Gannett Fleming ENGINEERS, P.C.
LOCUST VALLEY, NY HARRISBURG, PA

STATE OF NEW YORK · STEPHEN HADJIYANE · 086695 · LICENSED PROFESSIONAL ENGINEER

DATE	DESCRIPTION	BY	SYM.
11/07	GENERAL REVISIONS	SH	2
5/07	GENERAL REVISIONS	SH	1
4/07	REG. SUBMISSION	SH	0

REVISIONS

NEW YORK STATE THRUWAY AUTHORITY
DEPARTMENT OF ENGINEERING SERVICES
200 SOUTHERN BLVD., ALBANY, N.Y. 12209

TITLE OF PROJECT
REHABILITATION OF THE WASTEWATER TREATMENT PLANT

LOCATION OF PROJECT
STORMVILLE SERVICE AREA
M.P. 55.57 W.B.

TITLE OF DRAWING
PUMP STATION PLAN, SECTION AND ELEVATION

NEW YORK STATE THRUWAY AUTHORITY

CONTRACT NUMBER: TANY 08-17A
DATE: 4/23/07
DRAWING NUMBER: M-118

DRAFTED BY: M. Dobsky
CHECKED BY: Stephen Hadjiyane
DESIGNED BY:
IN CHARGE OF:
12/31/03 1:23pm FILE= K:\PROJECTS\14003\14198\001 (storm\fig\design\M-118_pump station.dwg by LANDEN XREF=

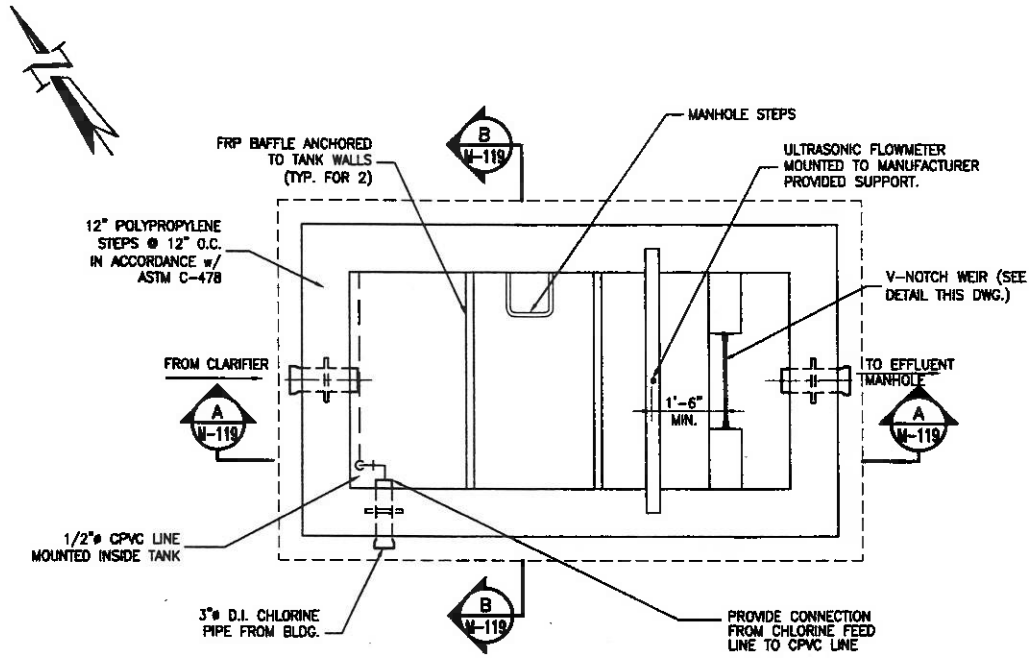

STRUCTURAL PLAN

SCALE: 1/2"=1'-0"

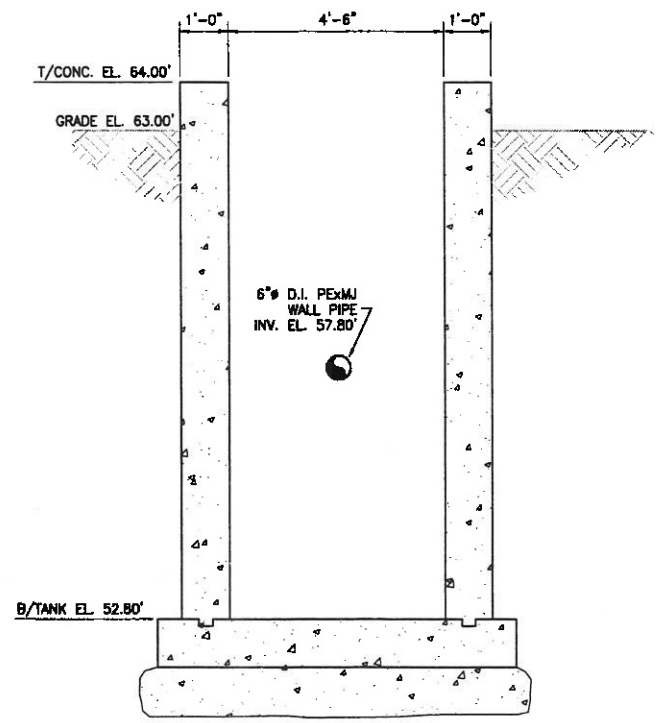

SECTION B M-119

SCALE: 1/2"=1'-0"

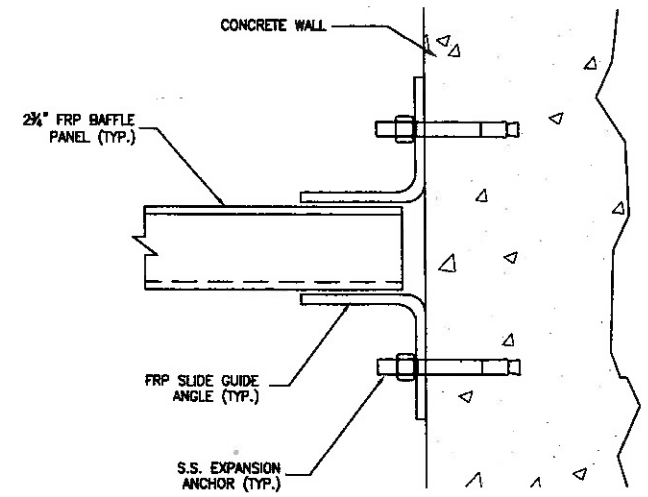

NOTES
1. PROVIDE AND INSTALL FRP TUFF SPAN BAFFLES BY ENDURO SYSTEMS, INC.
2. INSTALL AND MOUNT IN ACCORDANCE WITH THE MANUFACTURERS RECOMMENDATIONS.

CONCRETE WALL BAFFLE CONNECTION

NTS

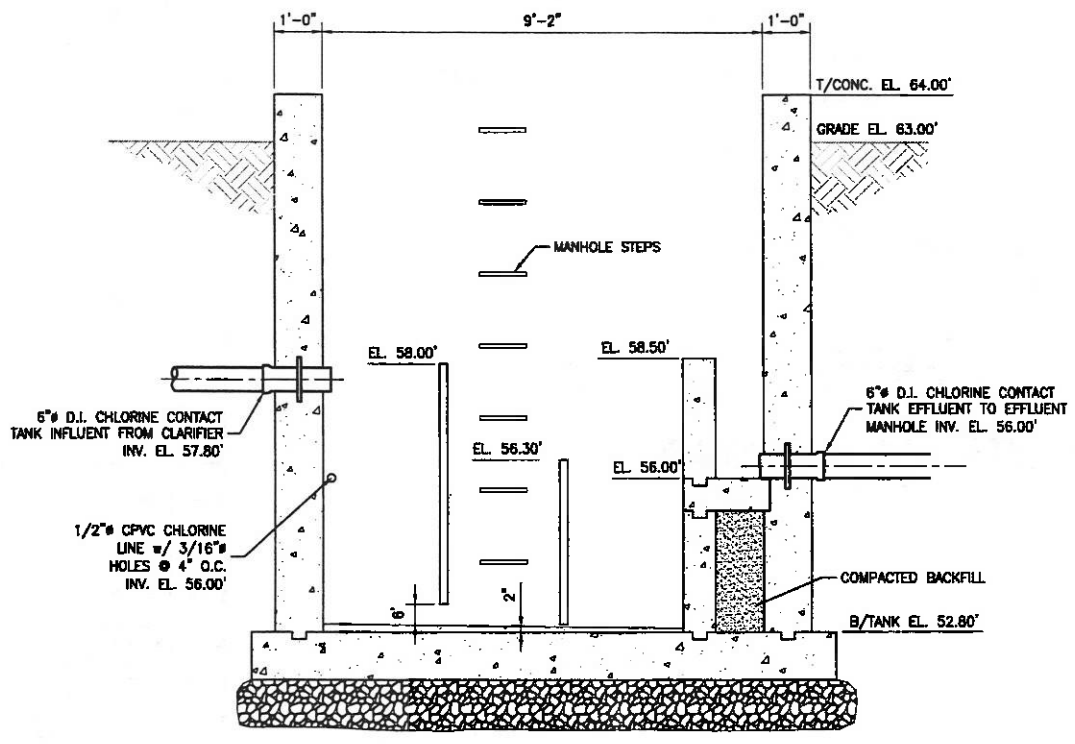

SECTION A M-119

SCALE: 1/2"=1'-0"

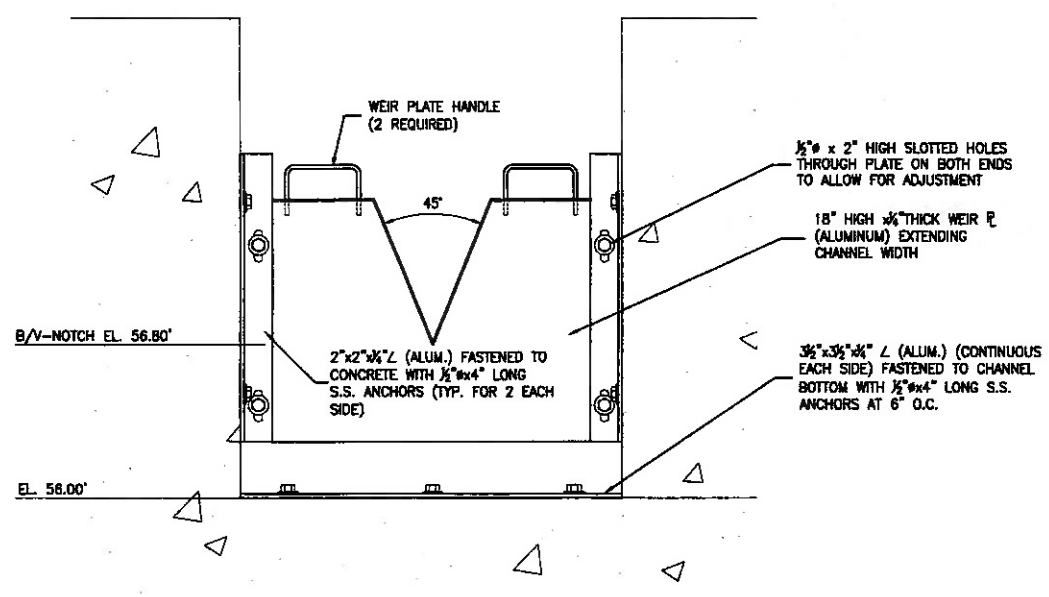

NEW V-NOTCH WEIR DETAIL

NTS

NOTE
SCALE REDUCTION

THESE REDUCED PLANS MAY NOT BE EXACTLY TO SCALE. ALL INDICATED SCALES ARE REDUCED TO APPROXIMATELY HALF SIZE.

0 1 2 3 4

Gannett Fleming ENGINEERS, P.C.

LOCUST VALLEY, NY HARRISBURG, PA

STATE OF NEW YORK · STEPHEN HADJIANE · 066635 · LICENSED PROFESSIONAL ENGINEER

DATE	DESCRIPTION	BY	SYM.
11/07	GENERAL REVISIONS	SH	2
5/07	GENERAL REVISIONS	SH	1
4/07	REG. SUBMISSION	SH	0

REVISIONS

NEW YORK STATE THRUWAY AUTHORITY
DEPARTMENT OF ENGINEERING SERVICES
200 SOUTHERN BLVD., ALBANY, N.Y. 12209

TITLE OF PROJECT: REHABILITATION OF THE WASTEWATER TREATMENT PLANT

LOCATION OF PROJECT: STORMVILLE SERVICE AREA M.P. 55.57 W.B.

TITLE OF DRAWING: CHLORINE CONTACT TANK MECHANICAL PLANS AND SECTIONS

NEW YORK STATE THRUWAY AUTHORITY

CONTRACT NUMBER: TANY 08-17A

DATE: 4/23/07

DRAWING NUMBER: M-119

DRAFTED BY: M. Dobsky

DESIGNED BY:

CHECKED BY: Peter Bonnichsen

IN CHARGE OF:

12/31/07 1:24pm FILE= K:\PROJECTS\14009\14899\001 (stormville)\dwgs\M-119 CCT mechanical.dwg by LAWSON REF=

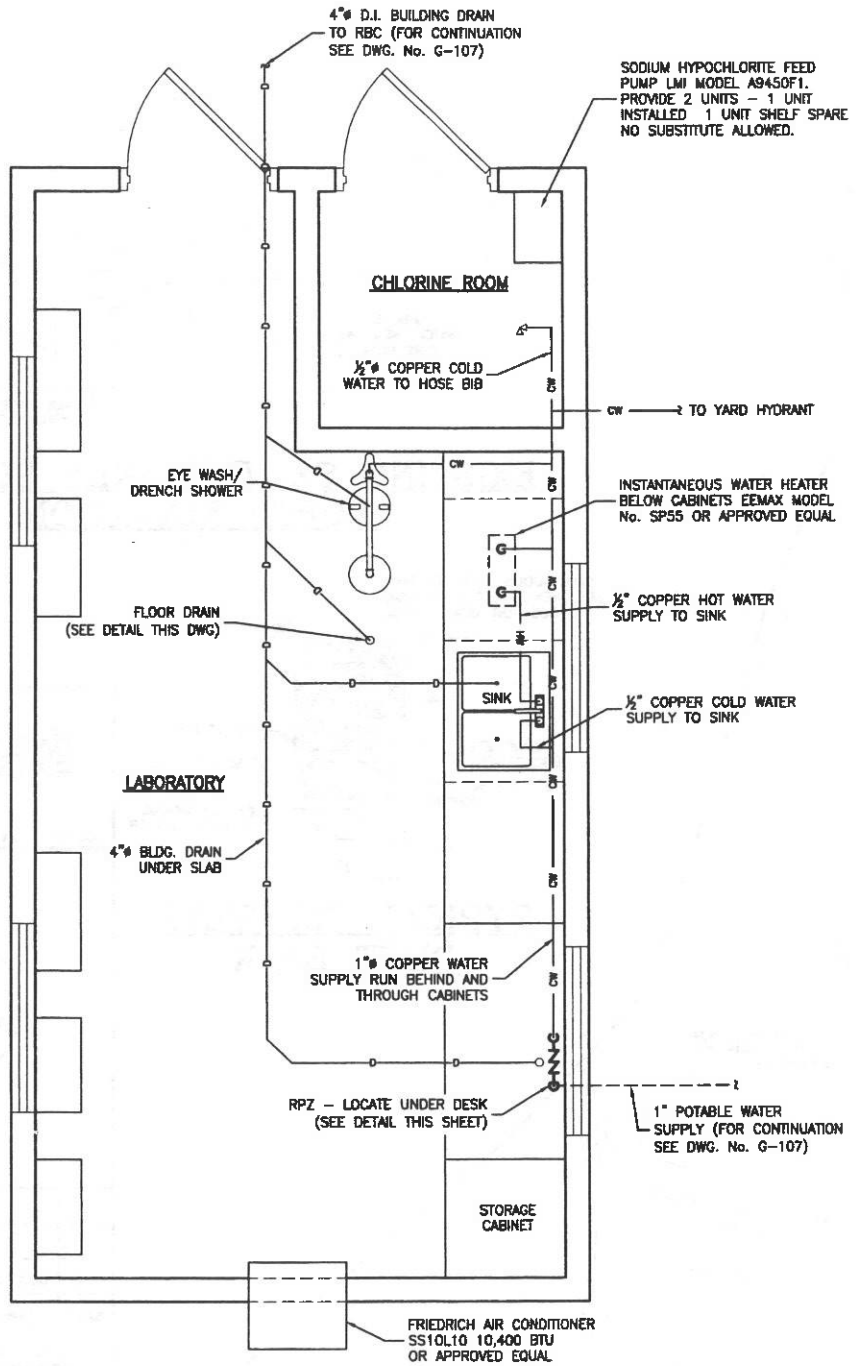

PLUMBING PLAN

SCALE: 1/2"=1'-0"

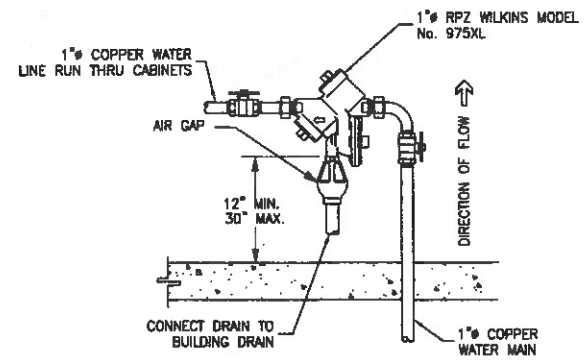

RPZ DETAIL

NTS

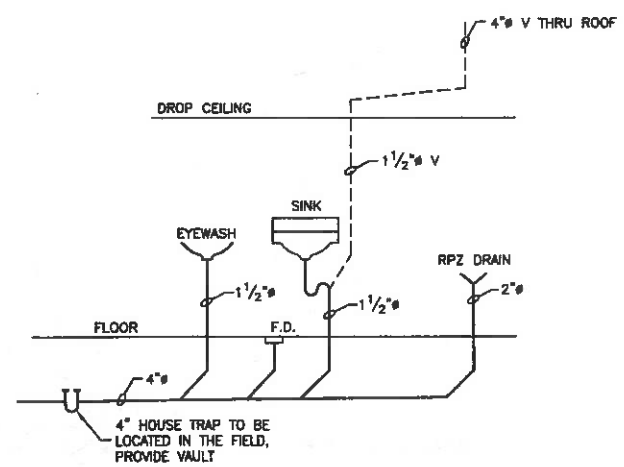

DWV RISER DIAGRAM

NTS

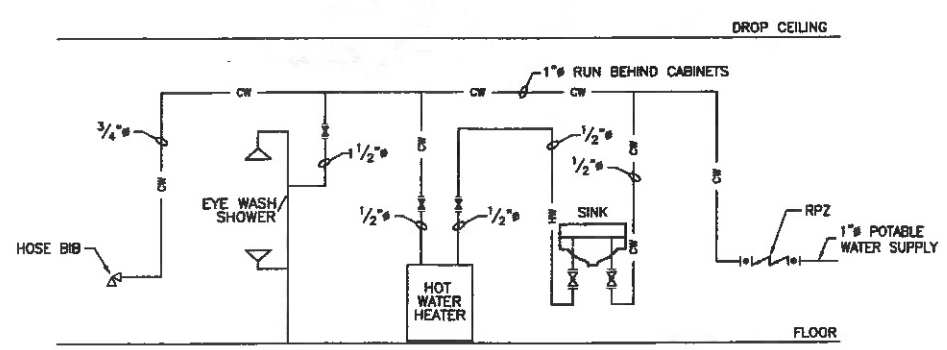

DOMESTIC WATER RISER DIAGRAM

NTS

NOTE
SCALE REDUCTION

THESE REDUCED PLANS MAY NOT BE EXACTLY TO SCALE. ALL INDICATED SCALES ARE REDUCED TO APPROXIMATELY HALF SIZE.

0 1 2 3 4

Gannett Fleming ENGINEERS, P.C.

LOCUST VALLEY, NY HARRISBURG, PA

STATE OF NEW YORK STEPHEN HADJIYANE 036595 LICENSED PROFESSIONAL ENGINEER

DATE	DESCRIPTION	BY	SYM.
11/07	GENERAL REVISIONS	SH	2
5/07	GENERAL REVISIONS	SH	1
4/07	REG. SUBMISSION	SH	0

REVISIONS

NEW YORK STATE THRUWAY AUTHORITY
DEPARTMENT OF ENGINEERING SERVICES
200 SOUTHERN BLVD., ALBANY, N.Y. 12209

TITLE OF PROJECT
REHABILITATION OF THE WASTEWATER TREATMENT PLANT

LOCATION OF PROJECT
STORMVILLE SERVICE AREA
M.P. 55.57 W.B.

TITLE OF DRAWING
LABORATORY/CHLORINE BUILDING MECHANICAL PLANS AND DETAILS

NEW YORK STATE THRUWAY AUTHORITY

CONTRACT NUMBER: TANY 08-17A

DATE: 4/23/07

DRAWING NUMBER: M-120

DRAFTED BY: M. Doherty CHECKED BY: Peter Greenwood DESIGNED BY: Eric Tel IN CHARGE OF: Stephen Hadjiyane

12/31/07 1:33pm FILE= K:\PROJECTS\44000\44999\001 (dwmmw)\dwg\E-121-Electrical site plan.dwg by LMASON

IN CHARGE OF: M. Dobbs

DESIGNED BY:

DRAFTED BY:

CHECKED BY:

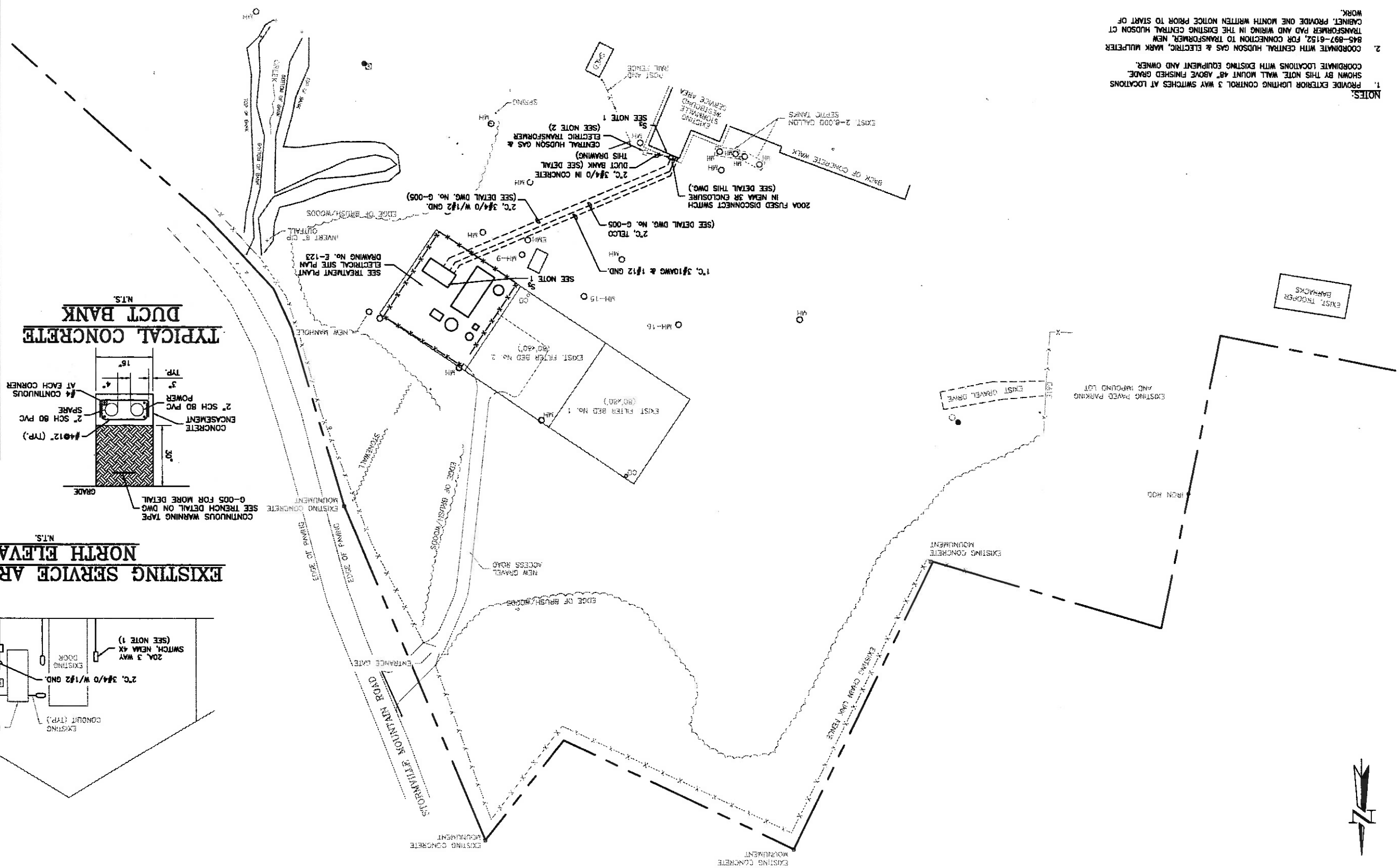

NOTES:

1. PROVIDE EXTERIOR LIGHTING CONTROL 3 WAY SWITCHES AT LOCATIONS SHOWN BY THIS NOTE. WALL MOUNT 48" ABOVE FINISHED GRADE. COORDINATE LOCATIONS WITH EXISTING EQUIPMENT AND OWNER.
2. COORDINATE WITH CENTRAL HUDSON GAS & ELECTRIC, MARK MULPETER 845-897-6152, FOR CONNECTION TO TRANSFORMER, NEW TRANSFORMER PAD AND WIRING IN THE EXISTING CENTRAL HUDSON CT CABINET. PROVIDE ONE MONTH WRITTEN NOTICE PRIOR TO START OF WORK.

NEW YORK STATE THRUWAY AUTHORITY
DEPARTMENT OF ENGINEERING SERVICES
200 SOUTHERN BLVD., ALBANY, N.Y. 12209

TITLE OF PROJECT
REHABILITATION OF THE WASTEWATER TREATMENT PLANT

LOCATION OF PROJECT
STORMVILLE SERVICE AREA
M.P. 55.57 W.B.

TITLE OF DRAWING
ELECTRICAL SITE PLAN

CONTRACT NUMBER
TANY 08-17A

DATE
4/23/07

DRAWING NUMBER
E-121

THRUWAY AUTHORITY NEW YORK STATE

Gannett Fleming
ENGINEERS, P.C.
LOCUST VALLEY, NY HARRISBURG, PA

STATE OF NEW YORK
STEPHEN HADJIANE
LICENSED PROFESSIONAL ENGINEER
066595

REVISIONS

DATE	DESCRIPTION	BY	SYM.
4/07	REG. SUBMISSION	SH	0
5/07	GENERAL REVISIONS	SH	1
11/07	GENERAL REVISIONS	SH	2

28/34

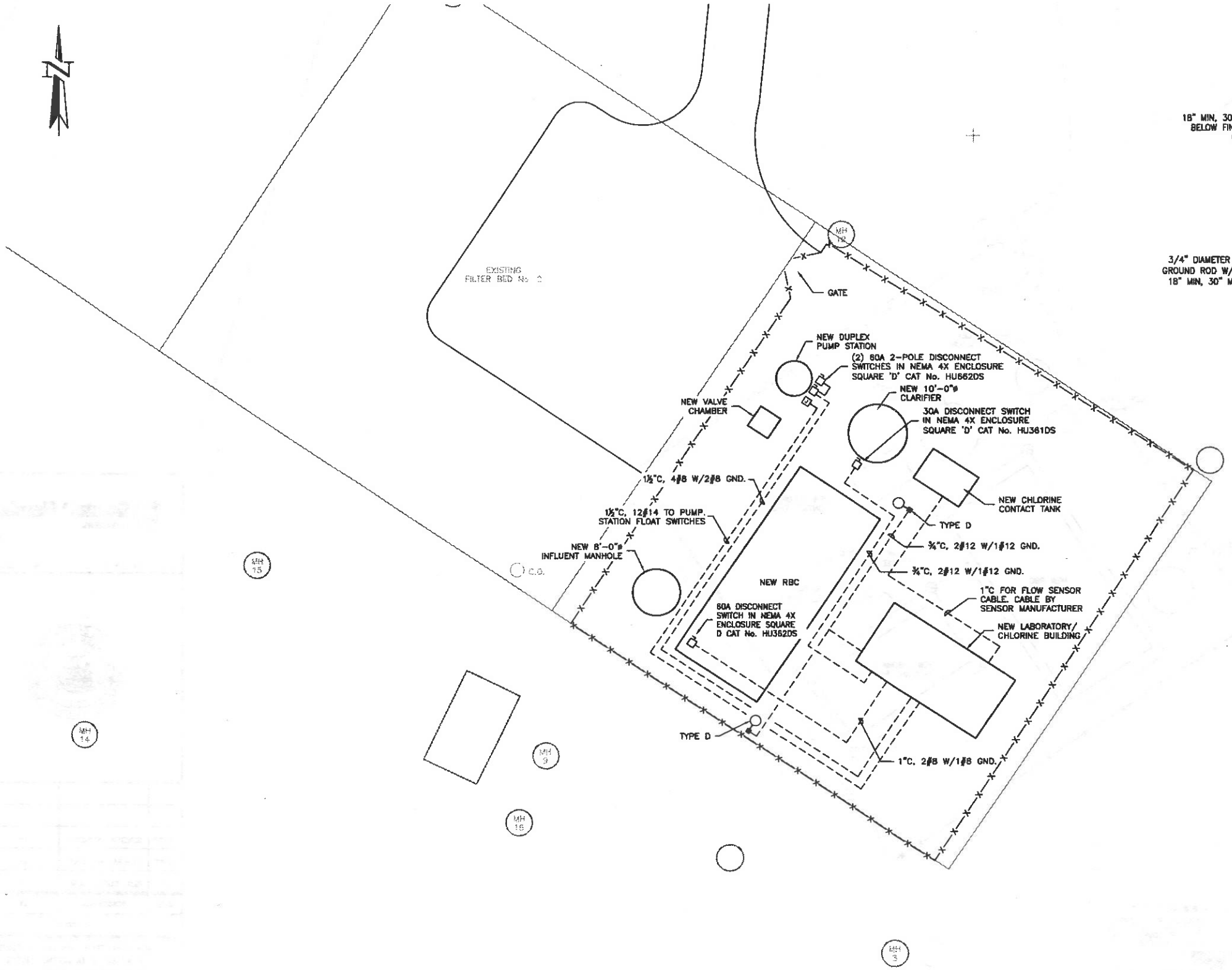

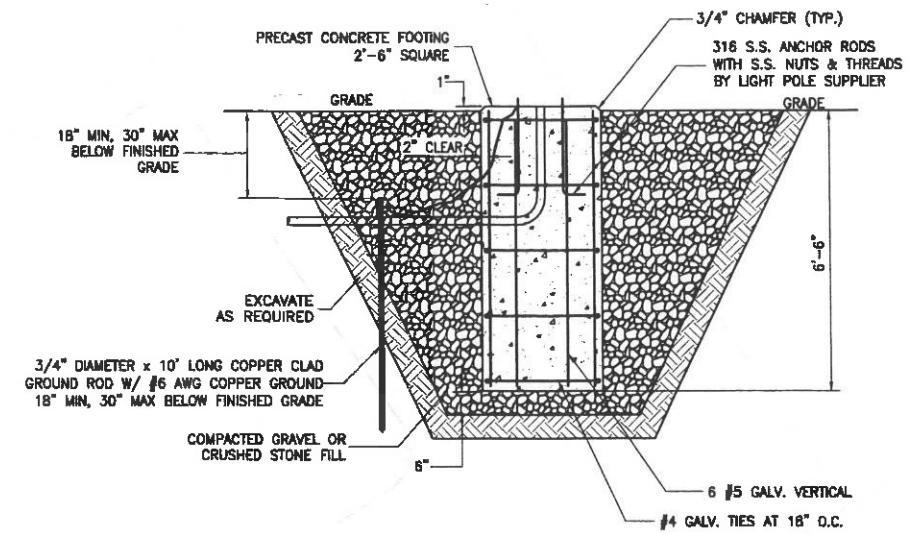

LIGHT POLE FOUNDATION DETAIL

(NOT TO SCALE)

NOTES
1. CONCRETE SHALL BE AIR-ENTRAINED, WITH A MINIMUM 28 DAY COMPRESSIVE STRENGTH OF 4000PSI.
2. REINFORCING STEEL SHALL CONFORM TO ASTM A615, GRADE 60.
3. USE TEMPLATES TO ACCURATELY INSTALL ANCHOR RODS.
4. CONCRETE MIX DESIGN AND STEEL REINFORCING DETAILING DRAWING SHALL BE SUBMITTED FOR REVIEW, PRIOR TO CONSTRUCTION.

LEGEND

+41.5	SPOT ELEVATION
○ CO	CLEAN OUT
○ MH	MANHOLE
○ EMH	ELECTRICAL MANHOLE
— — — —	PROPERTY LINE
—X—X—	EXISTING FENCE
—X—X—	NEW CHAIN LINK FENCE
■—○	20' POLE MOUNTED, ENCLOSED AND GASKETED PULSE START METAL HALIDE LIGHTING FIXTURE APPLETON CAT No. G-AM3275P-MT. APPLETON POLE CAT No. G-PR-TH-20-GAL.

0 5 20
SCALE: 1" = 10'

NOTE
SCALE REDUCTION
THESE REDUCED PLANS MAY NOT BE EXACTLY TO SCALE. ALL INDICATED SCALES ARE REDUCED TO APPROXIMATELY HALF SIZE.

0 1 2 3 4

Gannett Fleming ENGINEERS, P.C.
LOCUST VALLEY, NY HARRISBURG, PA

STATE OF NEW YORK STEPHEN HADJIYANE 066695 LICENSED PROFESSIONAL ENGINEER

DATE	DESCRIPTION	BY	SYM.
11/07	GENERAL REVISIONS	SH	2
5/07	GENERAL REVISIONS	SH	1
4/07	REG. SUBMISSION	SH	0

REVISIONS

NEW YORK STATE THRUWAY AUTHORITY
DEPARTMENT OF ENGINEERING SERVICES
200 SOUTHERN BLVD., ALBANY, N.Y. 12209

TITLE OF PROJECT
REHABILITATION OF THE WASTEWATER TREATMENT PLANT

LOCATION OF PROJECT
STORMVILLE SERVICE AREA
M.P. 55.57 W.B.

TITLE OF DRAWING
WASTEWATER TREATMENT PLANT ELECTRICAL SITE PLAN

NEW YORK STATE THRUWAY AUTHORITY

CONTRACT NUMBER: TANY 08-17A
DATE: 4/23/07
DRAWING NUMBER: E-122

DRAFTED BY: M. Dobsky
CHECKED BY: Peter Brownlee
DESIGNED BY:
IN CHARGE OF:
12/31/07 1:04pm FILE= R:\PROJECTS\44000\A44060\001 (stormville)\design\E-122-WWTP Electrical site plan.dwg by LMXCAD

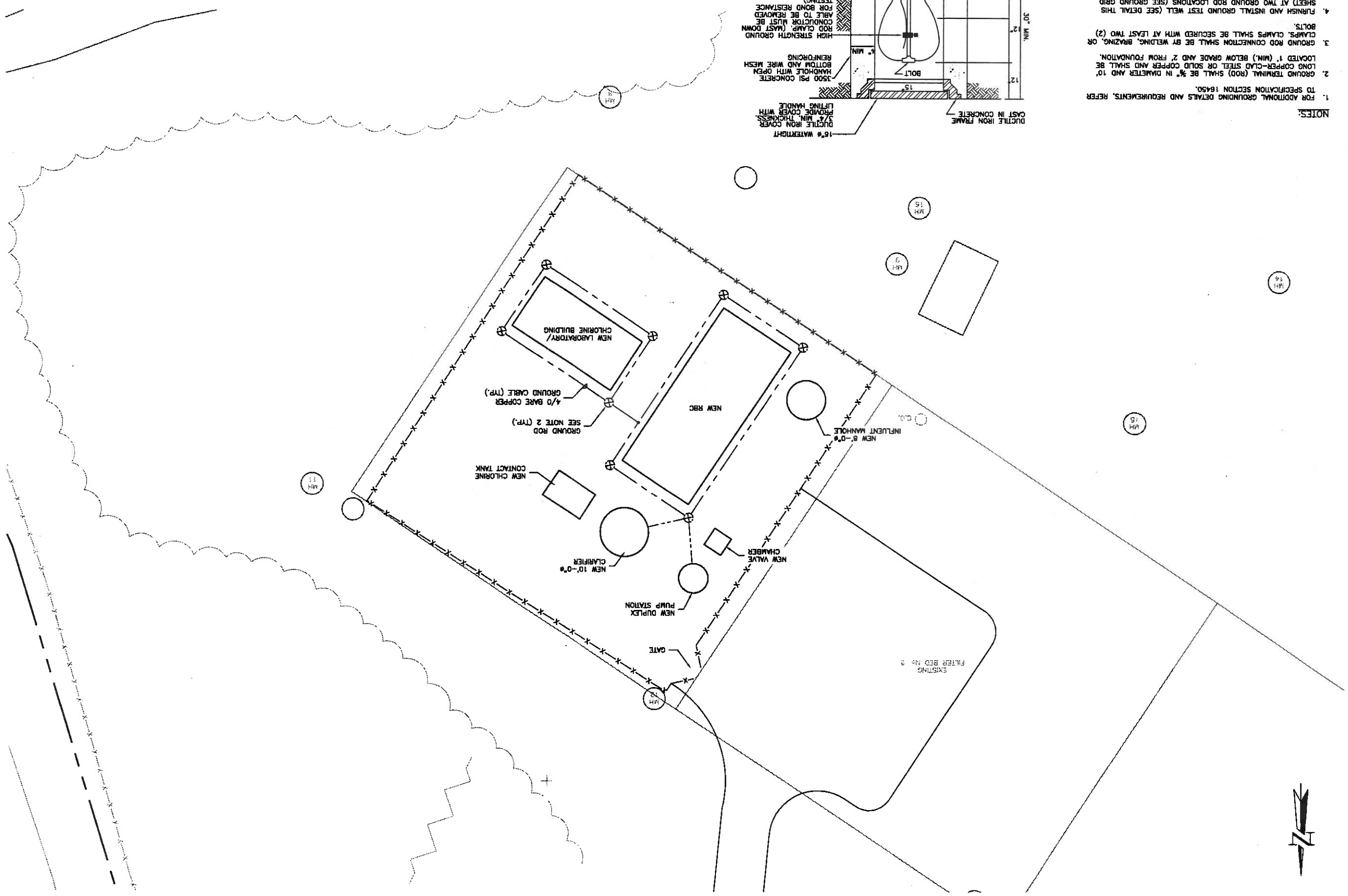

GROUND TEST WELL DETAIL

(NOT TO SCALE)

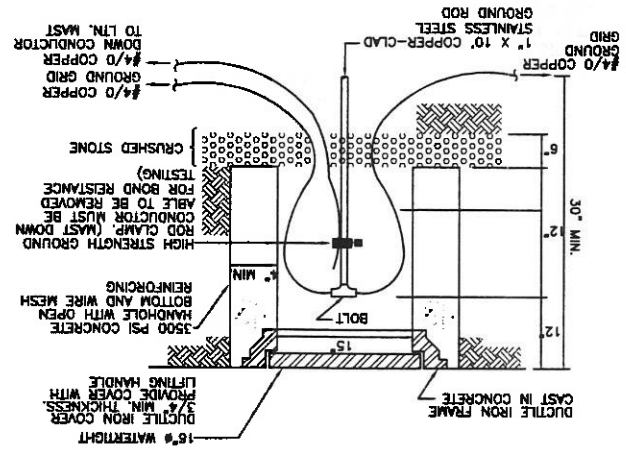

NOTES:

1. FOR ADDITIONAL GROUNDING DETAILS AND REQUIREMENTS, REFER TO SPECIFICATION SECTION 16450.
2. GROUND TERMINAL (ROD) SHALL BE ⅝" IN DIAMETER AND 10' LONG COPPER-CLAD STEEL OR SOLID COPPER AND SHALL BE LOCATED 1' (MIN.) BELOW GRADE AND 2' FROM FOUNDATION.
3. GROUND ROD CONNECTION SHALL BE BY WELDING, BRAZING, OR CLAMPS. CLAMPS SHALL BE SECURED WITH AT LEAST TWO (2) BOLTS.
4. FURNISH AND INSTALL GROUND TEST WELL (SEE DETAIL THIS SHEET) AT TWO GROUND ROD LOCATIONS (SEE GROUND GRID PLAN ON THIS SHEET).
5. THE ELECTRICAL CONTRACTOR SHALL GROUND ALL EQUIPMENT, SITE LIGHTING, STRUCTURAL STEEL, FOUNDATION REBAR, CANOPIES, FENCES, GUARDRAILS AND RAILINGS IN ACCORDANCE WITH THE REQUIREMENTS OF SPECIFICATION SECTION 16450.
6. ALL GROUND CABLE SHALL BE BURIED 4/0 COPPER INSTALLED IN ACCORDANCE WITH THE REQUIREMENTS OF SPECIFICATION SECTION 16450.

NOTE
SCALE REDUCTION
THESE REDUCED PLANS MAY NOT BE EXACTLY TO SCALE. ALL INDICATED SCALES ARE REDUCED TO APPROXIMATELY HALF SIZE.

SCALE: 1" = 10'

0 5 20

0 1 2 3 4

NEW YORK STATE THRUWAY AUTHORITY
DEPARTMENT OF ENGINEERING SERVICES
200 SOUTHERN BLVD, ALBANY, N.Y. 12209

TITLE OF PROJECT
REHABILITATION OF THE WASTEWATER TREATMENT PLANT

LOCATION OF PROJECT
STORMVILLE SERVICE AREA
M.P. 55.57 W.B.

TITLE OF DRAWING
WASTEWATER TREATMENT PLANT GROUNDING PLAN

CONTRACT NUMBER: TANY 08-17A

DATE: 4/23/07

DRAWING NUMBER: E-123

NEW YORK STATE THRUWAY AUTHORITY

Connett Fleming
ENGINEERS, P.C.
LOCUST VALLEY, NY — HARRISBURG, PA

STATE OF NEW YORK — STEPHEN HADJIYANE — 066895 — LICENSED PROFESSIONAL ENGINEER

DATE	DESCRIPTION	BY	SYM.
4/07	REG. SUBMISSION	SH	0
5/07	GENERAL REVISIONS	SH	1
11/07	GENERAL REVISIONS	SH	2

REVISIONS

DRAFTED BY: M. Dakotz
DESIGNED BY:
CHECKED BY: Peter Grunsfeld
IN CHARGE OF: Peter Grunsfeld

11/21/07 1:06pm FILE: K:\PROJECTS\44000\44091.00\ (dcsmith)\dwg\E-123-WWTP Grounding plan.dwg by LANXON

30/34

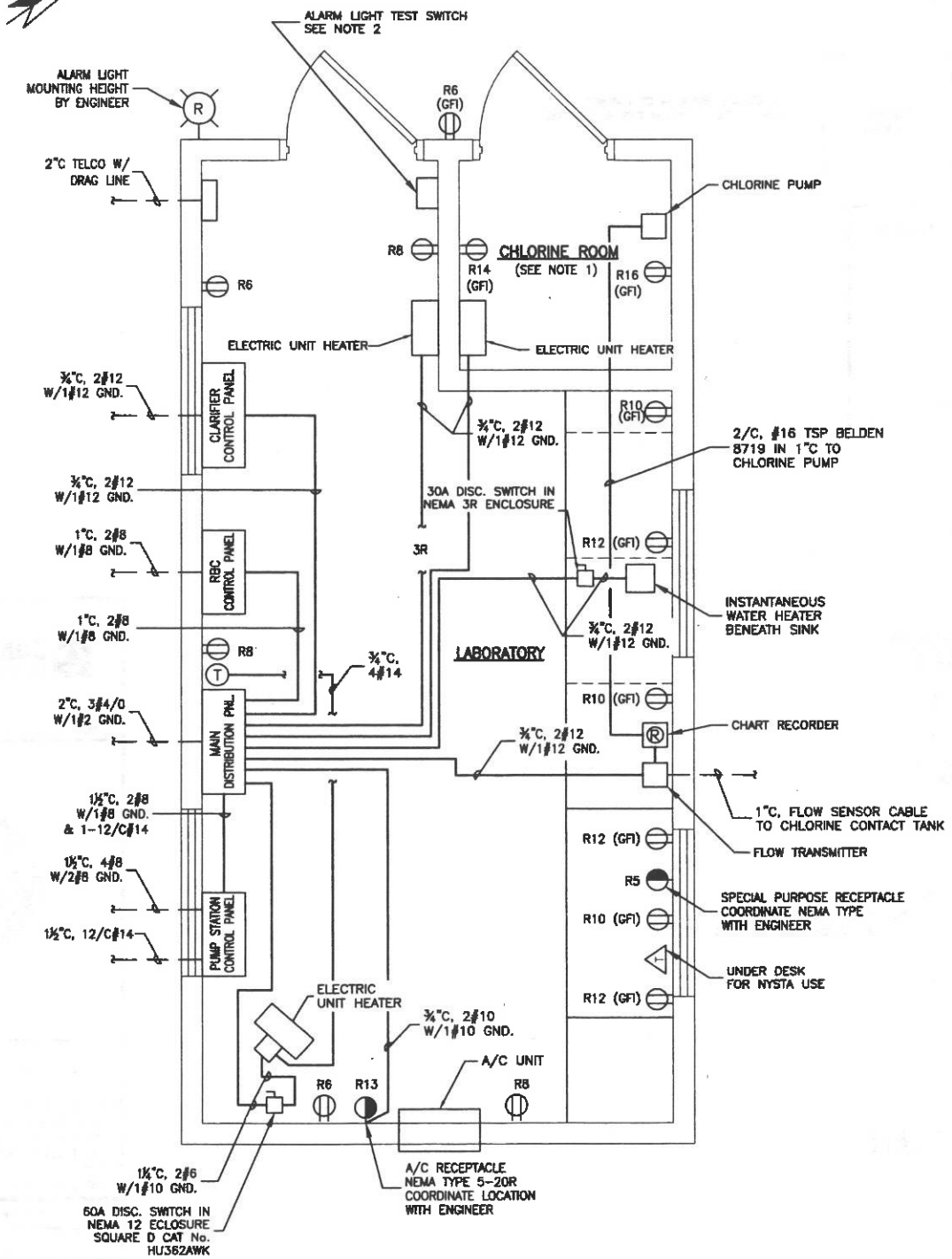

FLOOR PLAN

SCALE: 1/2"=1'-0"

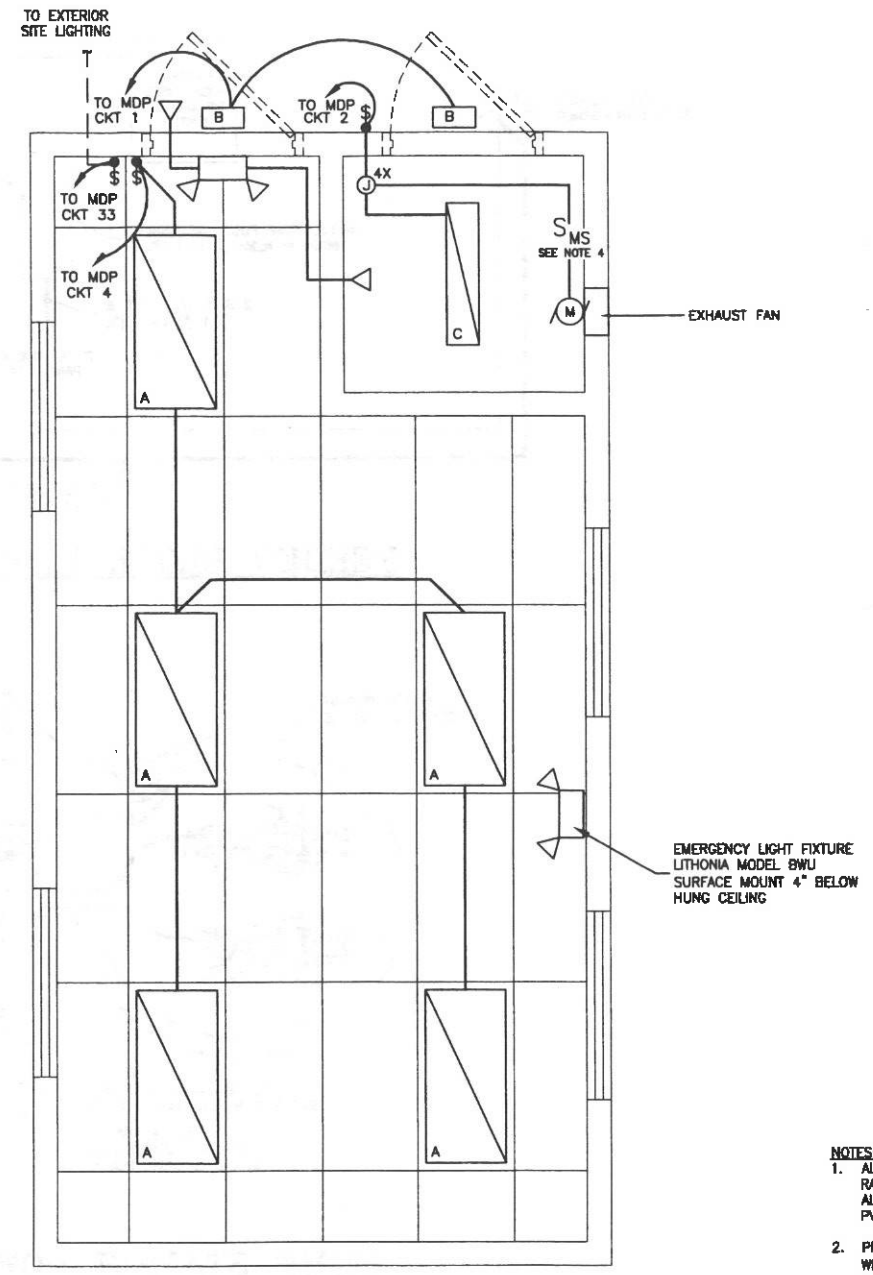

REFLECTED CEILING PLAN

SCALE: 1/2"=1'-0"

LEGEND

TYPE A	RECESSED MOUNTED, THREE LAMP FLUORESCENT LIGHTING FIXTURE DAY-BRITE CAT No. 2SPG-332-FS01-120-1/3-EB
TYPE B	WALL MOUNTED LIGHT FIXTURE, HOLOPHANE 50W, HPS, 120V MODEL # WP1A50DMP12GRF1 WITH LAMP, WIRE GUARD AND BUILT-IN PHOTOCELL
TYPE C	SURFACE MOUNTED ENCLOSED AND GASKETED 2 LAMP FLUORESCENT LIGHTING FIXTURE APPLETON CAT No. FVP232120SSF
R	ALARM LIGHT, FEDERAL SIGNAL MODEL # 225 WITH WALL BRACKET MODEL # LWMB2 AND RED DOME
	EMERGENCY AND EXIT LIGHTING FIXTURE LITHONIA LMQM-S-1-R-120-HO WITH ELA-NX-H0606 REMOTE FIXTURES
T	TELEPHONE JACK
M	MOTOR
SMS	MANUAL MOTOR STARTER

NOTES:

1. ALL EQUIPMENT INSTALLED IN THE CHLORINE ROOM SHALL BE RATED NEMA 4X FOR USE WITHIN A CORROSIVE ATMOSPHERE. ALL CONDUITS, SUPPORTS, FITTINGS, ETC. SHALL HAVE 40 MIL PVC COATED EXTERIOR WITH 2 MIL URETHANE COATED INTERIOR.
2. PROVIDE MOMENTARY PUSH BUTTON SQUARE D MODEL KR1RH5 WITH SURFACE MOUNT BOX AND LEGEND PLATE "ALARM LIGHT TEST". SEE ALARM LIGHT WIRING DIAGRAM ON DRAWING E-126.
3. CONNECT EXIT SIGNS AND EMERGENCY BATTERY PACKS TO LIGHTING CIRCUITS SERVING THE SAME AREA AND AHEAD OF LIGHTING CONTROL SWITCHES
4. PROVIDE SQUARE D MODEL FG1 MANUAL MOTOR STARTER WITH THERMAL OVERLOAD UNIT.

NOTE
SCALE REDUCTION

THESE REDUCED PLANS MAY NOT BE EXACTLY TO SCALE. ALL INDICATED SCALES ARE REDUCED TO APPROXIMATELY HALF SIZE.

0 1 2 3 4

Gannett Fleming
ENGINEERS, P.C.

LOCUST VALLEY, NY — HARRISBURG, PA

STATE OF NEW YORK
STEPHEN HADJIYANE
086895
LICENSED PROFESSIONAL ENGINEER

DATE	DESCRIPTION	BY	SYM.
11/07	GENERAL REVISIONS	SH	2
5/07	GENERAL REVISIONS	SH	1
4/07	REG. SUBMISSION	SH	0

REVISIONS

NEW YORK STATE THRUWAY AUTHORITY
DEPARTMENT OF ENGINEERING SERVICES
200 SOUTHERN BLVD., ALBANY, N.Y. 12209

TITLE OF PROJECT
REHABILITATION OF THE WASTEWATER TREATMENT PLANT

LOCATION OF PROJECT
STORMVILLE SERVICE AREA
M.P. 55.57 W.B.

TITLE OF DRAWING
LABORATORY/CHLORINE BUILDING ELECTRICAL POWER AND LIGHTING PLANS

NEW YORK STATE THRUWAY AUTHORITY

CONTRACT NUMBER: TANY 08-17A

DATE: 4/23/07

DRAWING NUMBER: E-124

DESIGNED BY: KRISHNAMURTHY — TITLE

DRAFTED BY: M. Doherty

CHECKED BY: John Greenfield

IN CHARGE OF: Stephen Hadjiyane

12/21/01 1:07pm PLG= K:\JOBS\TNY\14089\001 (stormville)\design\E-124 lab electrical plans.dwg by LMASON

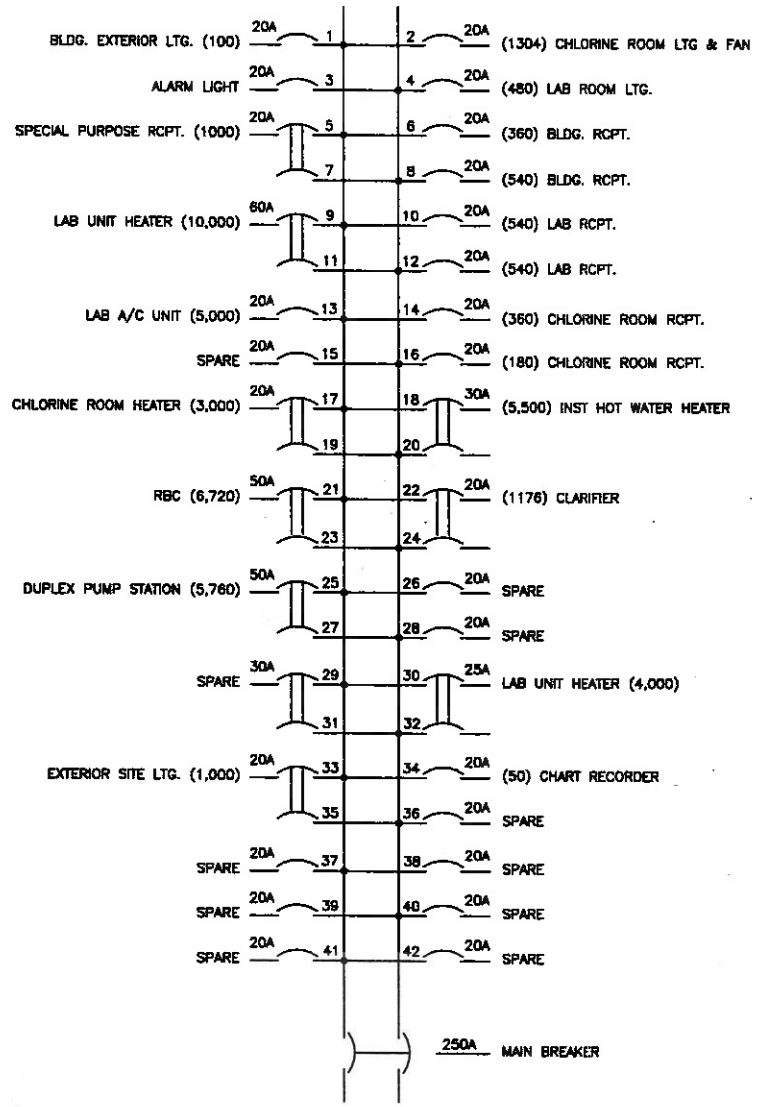

POWER PANEL MDP

400A, 240V, 1ø, 60HZ, 3W PANEL WITH 250A MAIN BREAKER

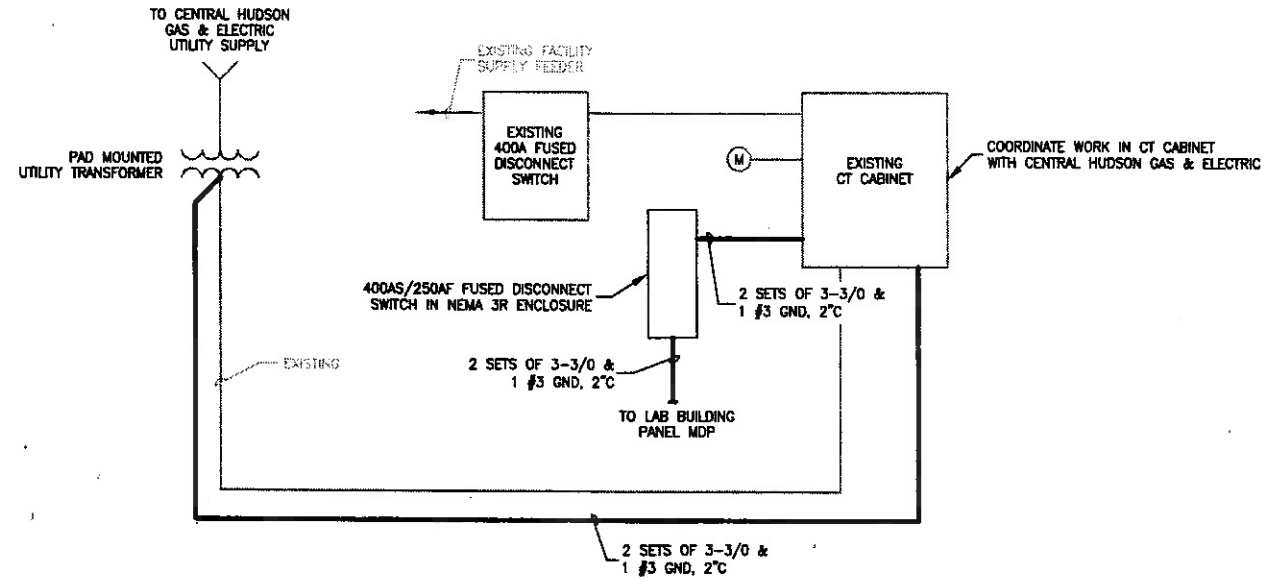

FEEDER BLOCK DIAGRAM

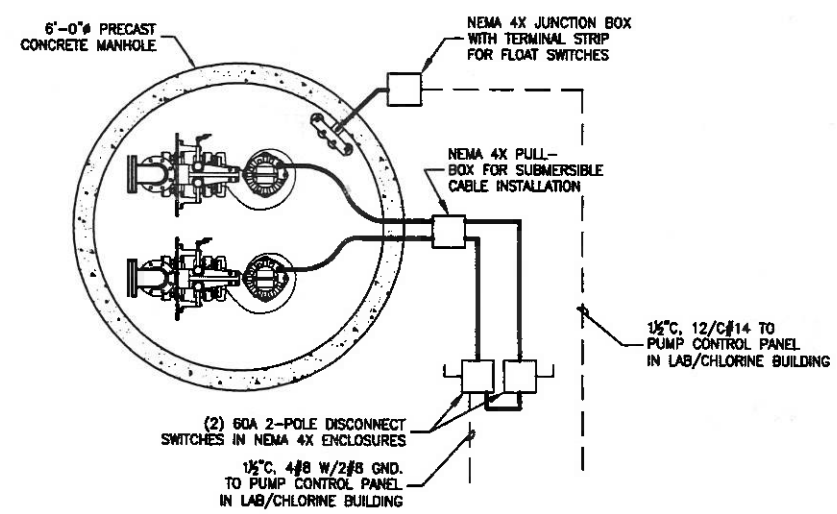

PUMP STATION POWER PLAN

N.T.S.

NOTE
SCALE REDUCTION

THESE REDUCED PLANS MAY NOT BE EXACTLY TO SCALE. ALL INDICATED SCALES ARE REDUCED TO APPROXIMATELY HALF SIZE.

0 1 2 3 4

Gannett Fleming ENGINEERS, P.C.

LOCUST VALLEY, NY HARRISBURG, PA

STATE OF NEW YORK · STEPHEN HADJIYANE · 086895 · LICENSED PROFESSIONAL ENGINEER

DATE	DESCRIPTION	BY	SYM.
11/07	GENERAL REVISIONS	SH	2
5/07	GENERAL REVISIONS	SH	1
4/07	REG. SUBMISSION	SH	0

REVISIONS

NEW YORK STATE THRUWAY AUTHORITY
DEPARTMENT OF ENGINEERING SERVICES
200 SOUTHERN BLVD., ALBANY, N.Y. 12209

TITLE OF PROJECT
REHABILITATION OF THE WASTEWATER TREATMENT PLANT

LOCATION OF PROJECT
STORMVILLE SERVICE AREA
M.P. 55.57 W.B.

TITLE OF DRAWING
ELECTRICAL BLOCK DIAGRAM AND POWER PANEL DETAIL

NEW YORK STATE THRUWAY AUTHORITY

CONTRACT NUMBER: TANY 06-17A

DATE: 4/23/07

DRAWING NUMBER: E-125

DRAFTED BY: M. Dolan
CHECKED BY: Peter Brownlee
DESIGNED BY:
IN CHARGE OF:

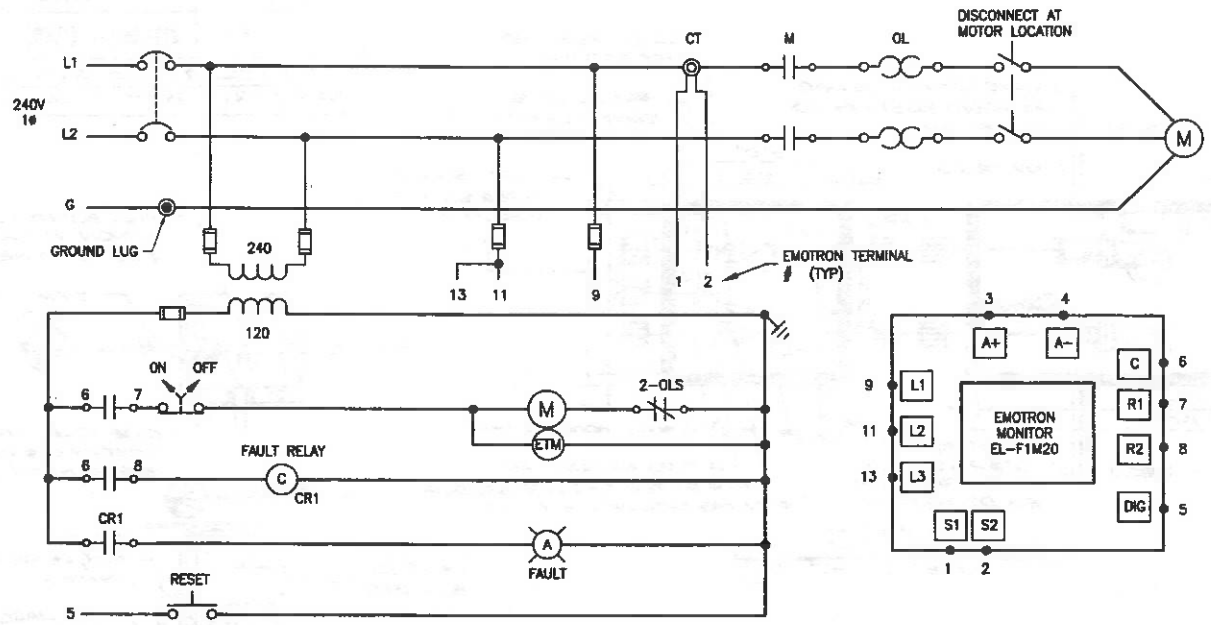

NOTES:

1. CURRENT TRANSFORMER (CT) MUST BE IN THE SAME PHASE THAT IS CONNECTED TO TERMINAL 9, PHASE L1.
2. PROVIDE COMBINATION STARTER IN NEMA 12 ENCLOSURE WITH CONTROL TRANSFORMER, CONTROL RELAY AND EMOTRON MONITOR MOUNTED INSIDE STARTER ENCLOSURE.
3. MOUNT ON/OFF SWITCH, EMOTRON MONITOR, RESET PUSH BUTTON AND EMOTRON MONITOR ON FACE OF ENCLOSURE – PROVIDE FRONT PANEL KIT FOR EMOTRON MONITOR.

WIRING DIAGRAM
(TYPICAL FOR CLARIFIER AND RBC)

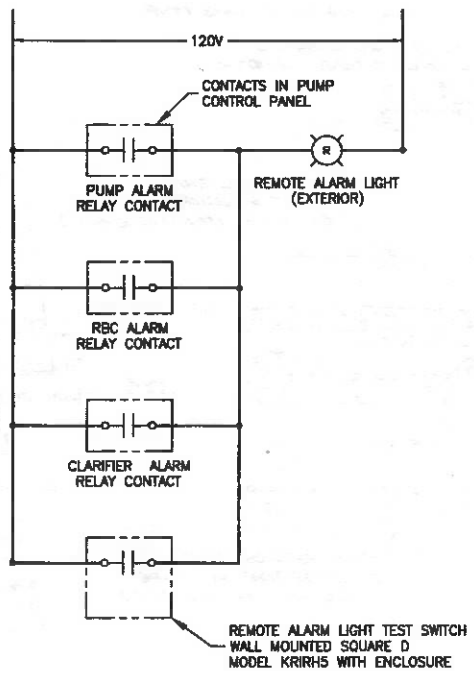

ALARM LIGHT WIRING DIAGRAM

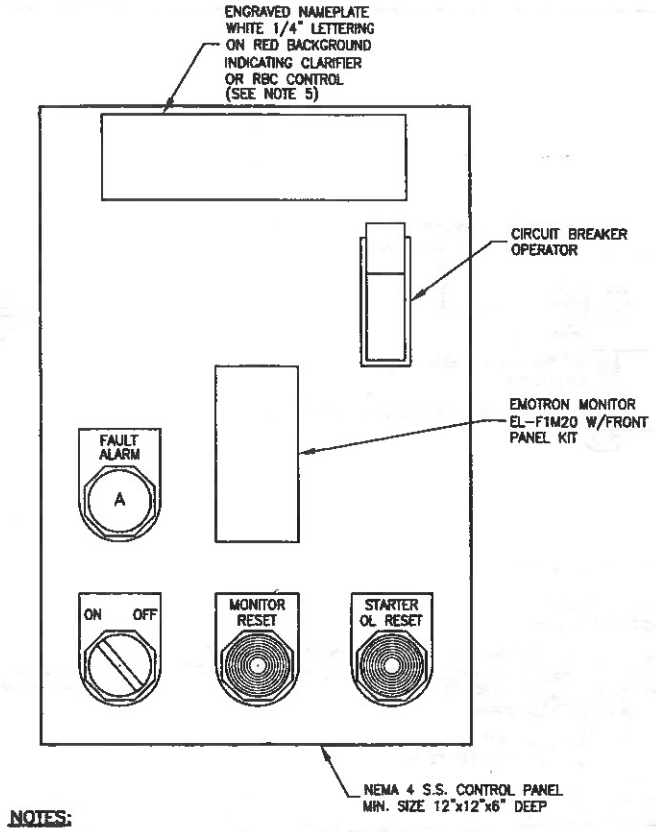

NOTES:

1. ALL PILOT LIGHTS SHALL BE "PUSH-TO-TEST" TYPE.
2. ALL CONTROL WIRING TO REMOTE INITIATING DEVICES SHALL BE #10 AWG IN CONDUIT SIZED AS REQUIRED.
3. INDICATING LIGHTS SHALL BE LED/120VAC, SQUARE D TYPE JT3BL, COLOR AS INDICATED.
4. RELAYS SHALL BE SQUARE D TYPE KP13V20.
5. PROVIDE UNIQUE NAMEPLATES FOR CLARIFIER AND RBC.
6. SEE WIRING DIAGRAM ON THIS DRAWING.

CONTROL PANEL
(TYPICAL FOR CLARIFIER AND RBC)
NTS

NOTE
SCALE REDUCTION
THESE REDUCED PLANS MAY NOT BE EXACTLY TO SCALE. ALL INDICATED SCALES ARE REDUCED TO APPROXIMATELY HALF SIZE.

0 1 2 3 4

Gannett Fleming
ENGINEERS, P.C.
LOCUST VALLEY, NY HARRISBURG, PA

STATE OF NEW YORK · STEPHEN HADJIYANE · 036695 · LICENSED PROFESSIONAL ENGINEER

DATE	DESCRIPTION	BY	SYM.
11/07	GENERAL REVISIONS	SH	2
5/07	GENERAL REVISIONS	SH	1
4/07	REG. SUBMISSION	SH	0

REVISIONS

NEW YORK STATE THRUWAY AUTHORITY
DEPARTMENT OF ENGINEERING SERVICES
200 SOUTHERN BLVD., ALBANY, N.Y. 12209

TITLE OF PROJECT
REHABILITATION OF THE WASTEWATER TREATMENT PLANT

LOCATION OF PROJECT
STORMVILLE SERVICE AREA
M.P. 55.57 W.B.

TITLE OF DRAWING
WIRING DIAGRAMS

NEW YORK STATE THRUWAY AUTHORITY

CONTRACT NUMBER: TANY 08-17A
DATE: 4/23/07
DRAWING NUMBER: E-126

DRAFTED BY: M. Dehaty
CHECKED BY: John Greenfield
DESIGNED BY:
IN CHARGE OF:
12/21/07 1:11pm FILE= K:\PROJECTS\14000\14960\(01) (stormville)\Design\E-126 Wiring diagrams.dwg by LAWSON XREF: TITLE

FED. ROAD REG. NO.	STATE	FEDERAL AID PROJECT NO.	SHEET NO.
I	N.Y.	IR-84-1 (213)	4

DUTCHESS COUNTY I-84 COMFORT STA
SANITARY SYSTEM REPLACEMEN

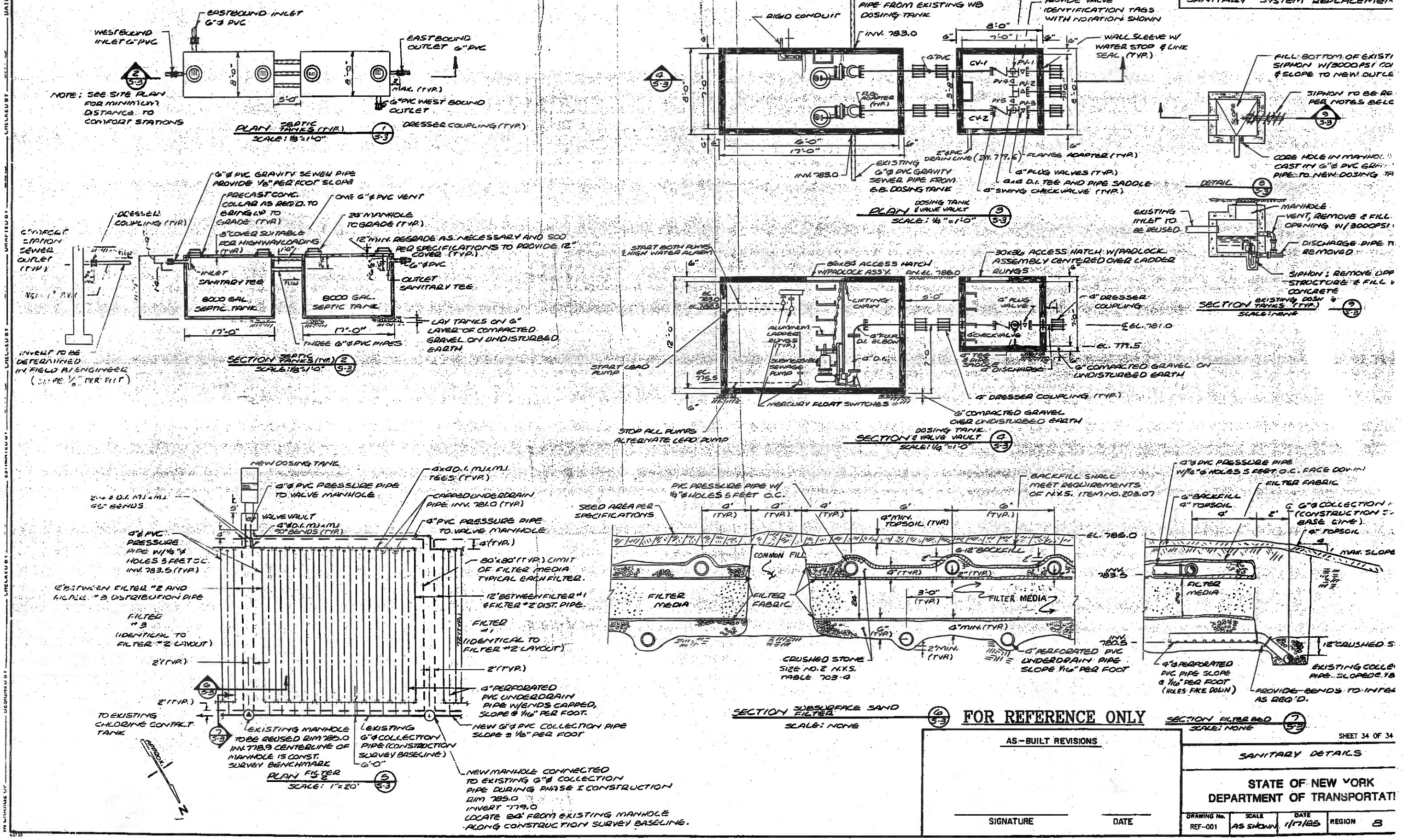

FOR REFERENCE ONLY

AS-BUILT REVISIONS

SIGNATURE DATE

SHEET 34 OF 34

SANITARY DETAILS

STATE OF NEW YORK
DEPARTMENT OF TRANSPORTATI

DRAWING No.	SCALE	DATE	REGION
REF-001	AS SHOWN	1/17/85	8