BD-PC13E

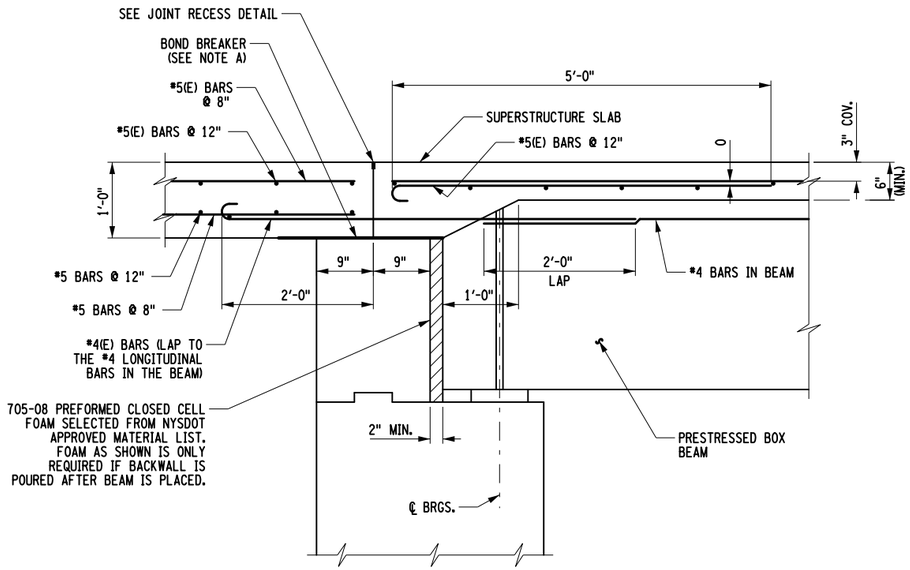

APPROACH SLAB SECTION FOR JOINTLESS PRESTRESSED BOX BEAM SUPERSTRUCTURE

NOTE A:
TOP OF BACK WALL SHALL BE STEEL TROWEL FINISHED. SHEET GASKET (TREATED BOTH SIDES) MATERIAL SPECIFICATION 728-06, SHALL BE PLACED ON THE TOP OF BACKWALLS. TWO 1/16" THICK SHEETS SHALL BE USED, AND PAYMENT SHALL BE INCLUDED IN THE UNIT PRICE BID FOR THE APPROACH SLAB ITEM.

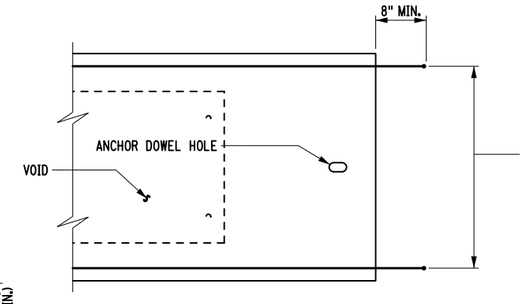

PLAN AT PIER

NOTE:
SLAB REINFORCEMENT, STIRRUPS AND LONGITUDINAL BEAM REINFORCEMENT NOT SHOWN FOR CLARITY.

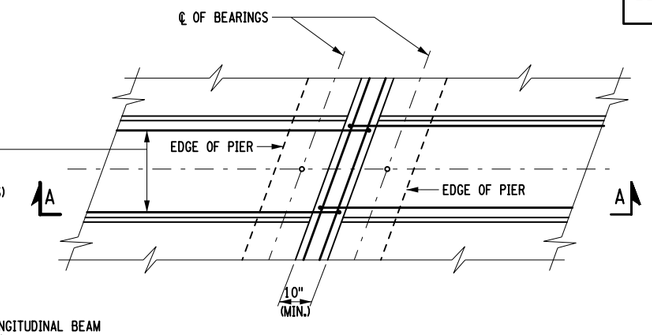

PARTIAL PLAN AT PIER

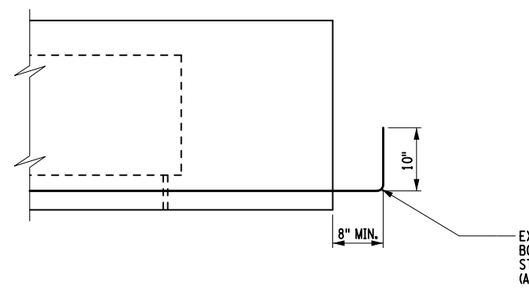

SIDE ELEVATION AT PIER

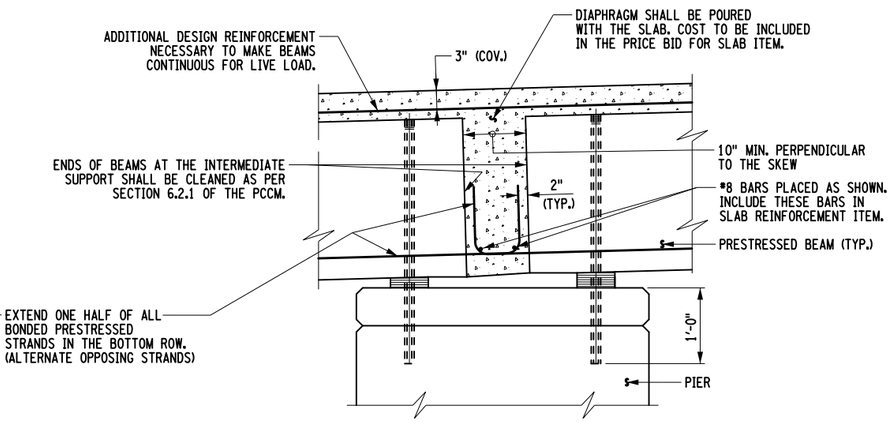

SECTION A-A

CONTINUOUS FOR LIVE LOAD CONNECTIONS

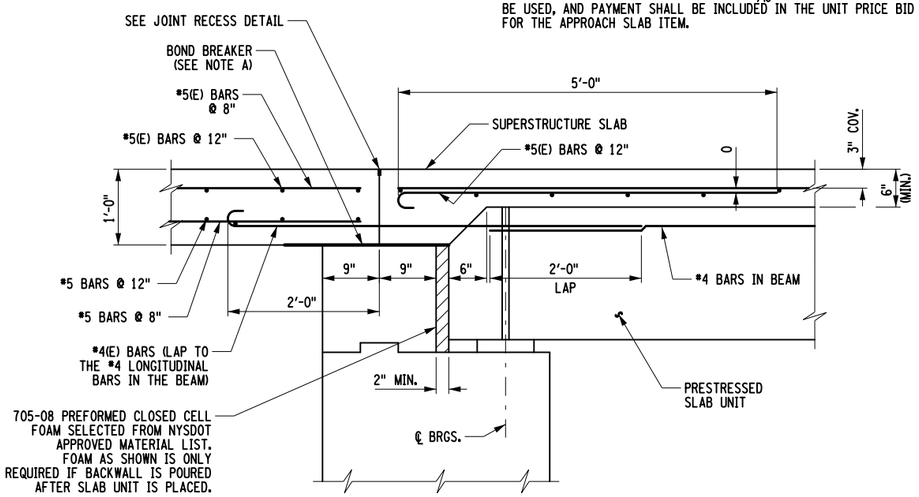

APPROACH SLAB SECTION FOR JOINTLESS PRESTRESSED SLAB UNIT SUPERSTRUCTURE

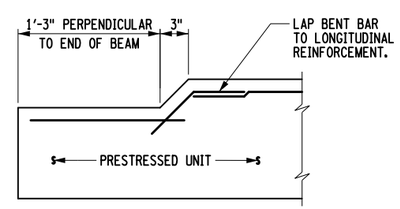

NOTE:
SHEAR AND END BLOCK REINFORCEMENT NOT SHOWN.

NOTCHOUT DETAIL
(MULTI-CELL MODULAR JOINTS ONLY)

DESIGNER NOTES:

AT JOINTLESS BRIDGES WITH 1'-0" DEEP SLAB UNITS, THE BEAM ENDS SHALL NOT BE NOTCHED.

SEE FIXED END FILL MATERIAL NOTE AND EXPANSION END FILL MATERIAL OPTION NOTE ON BD-PC12E.

FOR JOINT RECESS DETAIL, SEE BD-ID6AE.

FOR ANCHOR DOWEL HOLE DETAIL, SEE BD-PC7E.

NOTCHOUT DETAIL TO BE USED ONLY WHEN A MULTI-CELL MODULAR JOINT SYSTEM IS USED. NOTCHOUT DETAIL NOT TO BE USED WITH 1'-0" SLAB UNITS.

NOTES:

BOTTOM OF DIAPHRAGM TO BE FORMED WITH STYROFOAM OR OTHER APPROVED NON-REMOVABLE COMPRESSIBLE FOAM MATERIAL. DESIGN REINFORCEMENT IN BOTTOM OF BEAM AND DIAPHRAGM SHALL BE PLACED SO AS NOT TO INTERFERE WITH EACH OTHER DURING ERECTION.

705-08 PREFORMED, CLOSED CELL FOAM SELECTED FROM NYSDOT APPROVED MATERIAL LIST IS REQUIRED ONLY IF THE BACKWALL IS POURED AFTER SLAB UNIT PLACEMENT.

REVISED	NEW YORK STATE OF OPPORTUNITY.	Department of Transportation Office of Structures
	PRESTRESSED CONCRETE BOX/SLAB UNIT BEAMS MISCELLANEOUS DETAILS II	
ERRATA	APPROVED: 02/17/17 ORIGINAL SIGNED BY RICHARD MARCHIONE, P.E. DEPUTY CHIEF ENGINEER (STRUCTURES)	ISSUED UNDER EB 17-010 EFFECTIVE WITH THE LETTING OF 09/01/17

FILE NAME = BD-PC13E.dgn
DATE/TIME = 28-FEB-2017 10:22