I-81 VIADUCT PROJECT - PHASE 1, CONTRACT 2

PIN 3501.91, Contract D900056

DB CONTRACT DOCUMENTS REQUEST FOR PROPOSALS

PART 8

SPECIAL SPECIFICATIONS

Final November 4, 2022

This *Part 8 – Special Specifications* provides access to, and details the Project-specific requirements for the use of, the following documents:

1. NYSDOT Standard Specifications and Construction Materials
2. NYSDOT Engineering Information Issuances
3. NYSDOT Special Specifications.

NYSDOT Standard Specifications and Construction Materials

The Design-Builder shall use the NYSDOT Standard Specifications Construction Materials in coordination with *Part 5 – Special Provisions*.

The NYSDOT Standard Specifications Construction Materials can be accessed at the following internet link:

https://www.dot.ny.gov/main/business-center/engineering/specifications/busi-e-standards-usc.

NYSDOT Engineering Information Issuances

The Design-Builder shall use the relevant NYSDOT engineering information issuances, which include:

1. Engineering Instructions (EI);
2. Engineering Bulletins (EB);
3. Engineering Directives (ED).

The above listed engineering information issuances can be accessed at the following internet link:

https://www.dot.ny.gov/main/business-center/consultants/forms-publications-and-instructions/engineering-information-issuance-system

NYSDOT Special Specifications

The Design-Builder *may* use NYSDOT Special Specifications which are listed in the Electronic Pay Item Catalog (e-PIC) and which have received General Approval, and **shall** use any NYSDOT Special Specifications which are referenced in this Part 8 or elsewhere in the Contract Documents. Delete and ignore sections in the NYSDOT Special Specifications titled *Method of Measurement* and *Basis of Payment* from the NYSDOT Special Specifications.

NYSDOT Special Specifications can be accessed at the following internet link:

https://www.dot.ny.gov/main/business-center/engineering/specifications/special-specifications-us.

The NYSDOT e-PIC may be accessed at the following internet link:

https://www.dot.ny.gov/pic

The following Special Specifications are attached herein:

ITEM 406.XXYZ0108 – WARM MIX ASPHALT (WMA) WITH POLYMER FIBERS
ITEM 555.02XXXX01 – CONCRETE FOR STRUCTURES CLASS MP (MASS PLACEMENT)
ITEM 555.80020001 - CRACK REPAIR BY EPOXY INJECTION (RESTORATION)
ITEM 557.01040018 - LIGHTWEIGHT, HIGH - PERFORMANCE SUPERSTRUCTURE SLAB WITH INTEGRAL WEARING SURFACE - BOTTOM FORMWORK REQUIRED
ITEM 557.11010003 - INTEGRAL PRECAST CONCRETE BARRIER
ITEM 557.2500NN16 - CRACK SEALING USING HIGH MOLECULAR WEIGHT METHACRYLATE – LINEAR CRACKS
ITEM 557.2600NN16 - CRACK SEALING USING HIGH MOLECULAR WEIGHT METHACRYLATE - FLOODING
ITEM 557.6601NN16 - ULTRA-HIGH PERFORMANCE CONCRETE (UHPC)
ITEM 564.20010008 – HOT-DIP GALVANIZING OF STRUCTURAL STEEL
ITEM 565.20310003 – ELASTOMERIC SLIDING BEARINGS (EXPANSION)
ITEM 572.0002NN01 - METALIZING
ITEM 582.99000016 - EMBEDMENT OF GALVANIC ANODES IN CONCRETE
ITEM 607.41010010 - TEMPORARY PLASTIC BARRIER FENCE
ITEM 611.190X0024 - POST-PLANTING CARE WITH REPLACEMENT
ITEM 613.70XX0011 - BIRD REPELLENT SYSTEM
ITEM 634.99010017 – BUILDING CONDITION SURVEY
ITEM 634.99020017 – VIBRATION MONITORING (NONBLASTING)
ITEM 637.4000NN20 - WEBCAM SYSTEM
ITEM 643.99010004 - PRECAST CONCRETE NOISE BARRIER SYSTEM
ITEM 662.60000415 – FURNISHING ELECTRICAL SERVICE
ITEM 680.05010007 – 360 DEGREE CAMERA VIDEO DETECTION SYSTEM
ITEM 680.05020007 – 360 DEGREE CAMERA ASSEMBLY
ITEM 680.05040004 – ADVANCE VEHICLE VIDEO DETECTION CAMERA FOR TRAFFIC SIGNALS
ITEM 680.80324515 - INSTALL MICROCOMPUTER CABINET
ITEM 680.80325010 – ALUMINUM MICROCOMPUTER CABINET BASE
ITEM 680.81330010 – AUDIBLE PEDESTRIAN SIGNAL
ITEM 680.81500010 – PEDESTRIAN COUNT-DOWN TIMER MODULE
ITEM 680.90920103 – ELECTRIC METER CHANNEL, 100 AMPERE, SINGLE PHASE, 240 VOLT FOR TRAFFIC SIGNAL INSTALLATIONS
ITEM 680.94997008 – FURNISH AND INSTALL ELECTRICAL DISCONNECT/ GENERATOR TRANSFER SWITCH
ITEM 680.95010615 – SERVICE CABLE 1 CONDUCTOR, NO. 06 AWG
ITEM 683.06010013 - TRAFFIC MONITORING CABINET
ITEM 683.07250010 - FIBER OPTIC DROP CABLE
ITEM 683.10120008 - HD IP CAMERA ASSEMBLY - DOME TYPE
ITEM 683.10900010 - 5.8 GHz. WIRELESS VIDEO TRANSMITTER
ITEM 683.10910010 - 5.8 GHz. WIRELESS VIDEO RECEIVER
ITEM 683.91150010 – MULTI-LANE RADAR TRAFFIC DETECTOR - FURNISH AND INSTALL
ITEM 683.93XXYZ04 – DYNAMIC MESSAGE SIGN (DMS) FULL MATRIX, FRONT ACCESS LED
ITEM 683.95010011 - MPEG-4 VIDEO ENCODER, SINGLE CHANNEL
ITEM 683.95050010 – ETHERNET SWITCH
ITEM 683.96100305 – POWER DISTRIBUTION UNIT
ITEM 685.1X010004 – EPOXY PAINT WITH WET-NIGHT REFLECTIVE ELEMENTS

20 MILS (GROOVED PAVEMENT METHOD)
ITEM 800.01000015 – DESIGN BUILD – DESIGN SERVICES
ITEM 800.02000015 – DESIGN BUILD – CONSTRUCTION INSPECTION SERVICES
ITEM 800.03000015 – DESIGN BUILD – QUALITY CONTROL SERVICES
ITEM 800.0400NN15 – DESIGN BUILD – EXTRA WORK
ITEM 800.05000015 – DESIGN BUILD – SITE MOBILIZATION
ITEM 800.06000115 – DESIGN BUILD – CONSTRUCTION WORK
ITEM 800.0608NN15 – DESIGN BUILD – CONSTRUCTION WORK – STRUCTURAL REPAIRS
ITEM 800.14000115 - DESIGN BUILD - LOCAL HIRE INCENTIVE
ITEM 800.15000115 – DESIGN BUILD - TRAINING REQUIREMENTS
ITEM 800.16000120 – DESIGN BUILD – STEEL/IRON PRICE ADJUSTMENT

In the event of a discrepancy between the version of any Special Specification attached herein and the version available from the NYSDOT web site listed above, the version included in these Contract Documents shall apply.

ITEM 406.XXYZ0108 - WARM MIX ASPHALT (WMA) WITH POLYMER FIBERS

DESCRIPTION. This work shall consist of formulation and placement of a fiber reinforced asphalt mixture. The placement of this mixture shall be in accordance with these specifications and in reasonably close conformity with the required lines, grades, thicknesses, and typical sections shown on the plans or established by the Engineer.

MATERIALS. The requirements of §401-2 and §404-2, *Materials*, shall apply except as modified below.

A. Fibers. Aramid fiber shall meet the requirements of Table 1 – Aramid Fiber Properties. The acceptance shall be based on the certification from the supplier of fibers.

Table 1 – Aramid Fiber Properties	
Length	Minimum ¾ in. ± 1/16
Form	Fibrillated & Monofilament Fibers, non-resin impregnated
# of filaments per strand	1,000
Specific Gravity	1.44 +/-0.01
Filament diameter	12 microns +/- 2 microns
Acid/Alkali/ Resistance	Inert
Tensile Strength, minimum	400,000 psi
Decomposition Temperature	800° F, minimum

1. **Delivery.** The fibers shall be delivered in a sealed undamaged container with legible labels indicating material name, and lot number.
2. **Storage.** The fibers shall be stored in accordance with manufacturer's recommendations. The fibers shall be protected from UV radiation, contamination, or becoming wet.

B. Mixture Design. The formulation of the mixture shall be done using the mixture design procedure detailed in the current Materials Method 5.16, *"Hot Mix Asphalt Mixture Design and Mixture Verification Procedures"* and this specification.

C. PG Binder. PG binder grade used for the production of the mixture shall be the one specified in the project documents.

CONSTRUCTION. Provisions of §401-3 and §404-3, *Construction Details*, shall apply except as modified below:

ITEM 406.XXYZ0108 - WARM MIX ASPHALT (WMA) WITH POLYMER FIBERS

The fibers shall be added to the asphalt mixture at a rate recommended by the fiber supplier. The minimum rate of aramid fiber added to the mix shall be 2.0 ounces per ton.

The fibers shall be added to the asphalt mixture through specialized equipment that can accurately proportion and meter, by weight of total mix, during production of asphalt mixture. The equipment shall be calibrated to the satisfaction of the Regional Materials Engineer showing the fiber is being accurately metered and uniformly distributed into the mix (visual inspection). When a batch plant is used, pre-weighed fibers bags may be added per batch to provide the designed quantity of fibers in the asphalt mixture. Additional requirements for plants are as follows:

1. **Batch Plant.** When a batch plant is used, the fibers shall be added to the aggregate in the weigh hopper and follow the manufacturer's recommendations for both the dry and wet mixing times. The fibers shall be uniformly distributed before the injection of asphalt cement into the mixture.
2. **Drum Mixer Plant.** When a drum plant is used, the fibers shall be introduced such that it does not become entangled in the exhaust system.

If there is evidence of clumps of fibers at the discharge chute or on the project, the production of asphalt mixture shall be stopped and follow the fiber manufacture's procedures to reduce clumping.

The Contractor shall perform testing on the fiber reinforced mix according to *Table 1 – Mixture Performance Testing*. Sampling for the test will be completed on the first day of production, and on another day during the project. The results will be submitted to the Engineer and Materials Bureau before the end of the project.

Table 1 – Mixture Performance Testing

Test
[1]Overlay Test, Tex-248-F
[2]Flexural Beam Fatigue, 800 ms
CT Index
Flexibility Index (FI)

1. Samples fabricated from production mixture at the design gyration level.
2. Flexural Beam Fatigue, AASHTO T321 at 800 microstrains, tested at 20°C, 10 Hz, average of two samples with 7.0% ± 1.0% air voids.

METHOD OF MEASUREMENT. Provisions of §401-4 and §404-4, *Method of Measurement*, shall apply.

BASIS OF PAYMENT. Provisions of §401-5 and §404-5, *Basis of Payment*, shall apply except that the bid price shall include the cost of fibers, feeder, and labor for the asphalt mixture production with fibers.

ITEM 406.XXYZ0108 - WARM MIX ASPHALT (WMA) WITH POLYMER FIBERS

Payment will be made under:

Item	Item Description	Pay Unit
406.01790108	Truing & Leveling F9 WMA with Polymer Fibers, 70 Series Compaction	Ton
406.01890108	Truing & Leveling F9 WMA with Polymer Fibers, 80 Series Compaction	Ton
406.06810108	6.3 F1 Top Course WMA with Polymer Fibers, 80 Series Compaction	Ton
406.06820108	6.3 F2 Top Course WMA with Polymer Fibers, 80 Series Compaction	Ton
406.06830108	6.3 F3 Top Course WMA with Polymer Fibers, 80 Series Compaction	Ton
406.09510108	9.5 F1 Top Course WMA with Polymer Fibers, 50 Series Compaction	Ton
406.09520108	9.5 F2 Top Course WMA with Polymer Fibers, 50 Series Compaction	Ton
406.09610108	9.5 F1 Top Course WMA with Polymer Fibers, 60 Series Compaction	Ton
406.09620108	9.5 F2 Top Course WMA with Polymer Fibers, 60 Series Compaction	Ton
406.09630108	9.5 F3 Top Course WMA with Polymer Fibers, 60 Series Compaction	Ton
406.09710108	9.5 F1 Top Course WMA with Polymer Fibers, 70 Series Compaction	Ton
406.09720108	9.5 F2 Top Course WMA with Polymer Fibers, 70 Series Compaction	Ton
406.09730108	9.5 F3 Top Course WMA with Polymer Fibers, 70 Series Compaction	Ton
406.12510108	12.5 F1 Top Course WMA with Polymer Fibers, 50 Series Compaction	Ton
406.12520108	12.5 F2 Top Course WMA with Polymer Fibers, 50 Series Compaction	Ton
406.12610108	12.5 F1 Top Course WMA with Polymer Fibers, 60 Series Compaction	Ton
406.12620108	12.5 F2 Top Course WMA with Polymer Fibers, 60 Series Compaction	Ton
406.12630108	12.5 F3 Top Course WMA with Polymer Fibers, 60 Series Compaction	Ton
406.12710108	12.5 F1 Top Course WMA with Polymer Fibers, 70 Series Compaction	Ton
406.12720108	12.5 F2 Top Course WMA with Polymer Fibers, 70 Series Compaction	Ton
406.12730108	12.5 F3 Top Course WMA with Polymer Fibers, 70 Series Compaction	Ton
406.19590108	19 F9 Binder Course WMA with Polymer Fibers, 50 Series Compaction	Ton
406.19690108	19 F9 Binder Course WMA with Polymer Fibers, 60 Series Compaction	Ton
406.19790108	19 F9 Binder Course WMA with Polymer Fibers, 70 Series Compaction	Ton
406.25590108	25 F9 Binder Course WMA with Polymer Fibers, 50 Series Compaction	Ton
406.25690108	25 F9 Binder Course WMA with Polymer Fibers, 60 Series Compaction	Ton
406.25790108	25 F9 Binder Course WMA with Polymer Fibers, 70 Series Compaction	Ton
406.37690108	37.5 F9 Base Course WMA with Polymer Fibers, 60 Series Compaction	Ton
406.37790108	37.5 F9 Base Course WMA with Polymer Fibers, 70 Series Compaction	Ton

ITEM 555.02000001 - CONCRETE FOR STRUCTURES CLASS MP (MASS PLACEMENT)

DESCRIPTION:

Furnish and place portland cement concrete with a minimum compressive strength of 3000 psi where specified on the Plans for mass concrete placements of structural elements. Follow §555, except as noted below.

MATERIALS:

§555-2, except as modified herein.

Using materials meeting the requirements of §501-2.02 and as indicated below, design a concrete mixture(s) based on the following criteria.

- Strength - 56 day minimum compressive strength of 3000 psi.
- Slump - 3 inches +/- 1 inch. A high range water reducing admixture may be used upon prior written approval from the Director, Materials Bureau. If adding a high range water reducing admixture, slump will be limited to 3 inches maximum before the addition. After the addition, slump will be limited to 8 inches maximum.
- Entrained Air - 5 to 8%.
- Water/Total Cementitious Material Ratio - 0.40 maximum.
- Class F Fly Ash - 20% to 50% by weight of cementitious materials.
- Cement, Type II only.

Perform mix development testing in accordance with ASTM C143, C231, C192 and C39 to assure all performance criteria can be achieved during production and placement.

An equal mix design may be submitted for evaluation to the Director, Material Bureau for approval.

At least one month prior to the start of any concrete placement, provide a copy of the proposed mixture design(s) and trial batch test results to the Director, Materials Bureau, submitted through the Engineer, for evaluation. Submit sufficient data to permit the Director to offer an informed evaluation. Include at least the following:

- Concrete mix proportions.
- Material sources. Also include fineness modulus and specific gravity for all aggregates.
- Air content of plastic concrete.
- Slump of plastic concrete.
- Compressive strength at 7, 14, 28, and 56 days and at any other age tested or deemed necessary.

- Temperature/time relation (Interior of concrete with autogenous curing boxes) for 7 days measuring at hourly intervals.

Do not interpret having a valid mixture design as approval of the mixture. Resubmit any proposed mixture design change to the Director, Materials Bureau, for evaluation. Multiple mixture designs may be used to address performance and placement issues as deemed necessary by the Contractor. Submit each mixture for evaluation, as indicated above, prior to use.

CONSTRUCTION DETAILS:

Follow §555-3, except as modified herein:

Replace §555-3.01 - Concrete Manufacturing and Transporting with:
§501-2.03 - Concrete Batching Facility Requirements,
§501-2.04 - Concrete Mixer and Delivery Unit Requirements,
§501-3.02 - Handling, Measuring, and Batching Materials, and
§501-3.03 - Concrete Mixing, Transporting, and Discharging, except that the maximum concrete temperature at the point of discharge shall be as specified in the Thermal Control Plan.

The Contractor shall prepare a Thermal Control Plan prior to placement of the mass concrete.

Thermal Control Plan:

The Thermal Control Plan shall at a minimum include a Heat Dissipation Study (Reference ACI 207 or thermal modeling software) as well as to describe the measures and procedures the Contractor intends to use to satisfy the following Temperature Control Requirements for each mass concrete element:

i. The Maximum Temperature Differential shall be limited to 35 degrees F. The temperature differential between the interior and exterior portions of the designated mass concrete elements during curing will be maintained to be less than or equal to this Maximum Temperature Differential, and

ii. The Maximum Allowable Plastic Concrete Temperature shall be limited to 160 degrees F.

A change to the Temperature Control Requirements specified above can be addressed in the Thermal Control Plan through Heat Dissipation Studies to demonstration that deleterious effects to the concrete can be avoided through adherence to the Thermal Control Plan. Such a change requires approval by the D.C.E.S.

As a minimum, the Thermal Control Plan shall include the following:

A. Concrete mix design. If the mix will be cooled, the Contractor shall define the methodology and necessary equipment to achieve these mix temperatures.

B. Duration and method of curing.

C. Methods of controlling temperature differentials, inclusive of active coolant systems not previously defined within the Engineering Drawings.

D. An analysis of the anticipated thermal developments in the mass concrete elements for all expected project temperature ranges using the proposed mix design, casting procedures, and materials. It shall show complete details and determine the maximum temperature differentials within the concrete mass.

E. Temperature sensor types and locations including installation details.

F. Temperature Monitoring System including system description, operating plan, recording and reporting plan, and remedial action plan.

G. Field measures and documentation procedures to ensure conformance with the maximum concrete temperature and temperature differential requirements.

H. Field methods of applying immediate corrective action should the temperature differential approach the Maximum Temperature Differential and Maximum Allowable Concrete Temperature.

The Contractor shall submit the Thermal Control Plan to the Engineer for approval a minimum of thirty working days prior to concrete placement. Mass concrete placement shall not begin until the D.C.E.S. has approved the Thermal Control Plan.

Acceptance/Testing of concrete shall follow §555-3.04 C, meeting the specified requirements of this specification and the Thermal Control Plan.

Modify §555-3.06 - Concrete Joints: Structural elements may be constructed in stages using construction joints if permission is granted by the Deputy Chief Engineer for Structures Design and Construction.

Modify §555-3.10 - Loading Limitations: After the minimum curing period, concrete may receive construction loads after reaching a compressive strength of 2500 psi. Testing will be in

accordance with Note 3 of Table 555-4.

All concrete for this item shall achieve 3000 psi prior to opening the structure to traffic. Compressive strengths shall be determined from cylinders stored and cured in the same manner as the concrete it represents. The average compressive strength of each cylinder set shall be greater than the desired compressive strength, with no individual cylinder less than 90% of the desired compressive strength.

Temperature Monitoring System:

The temperature monitoring and recording system for mass concrete shall consist of temperature sensors connected to a data acquisition system capable of printing, storing, and downloading data to a computer. Temperature sensors shall be located such that the maximum temperature difference within a mass concrete element can be monitored. As a minimum, concrete temperatures shall be monitored from the center of the concrete mass, the base of the mass, the surface of the mass, and the center of an exterior outer face that is the shortest distance from the center of the concrete mass.

Temperature readings shall be automatically recorded on an hourly basis or as required by the Engineer. A redundant set of sensors shall be installed near the primary set. Provision shall be made for recording the redundant set, but records of the redundant sensors need not be made if the primary set is operational.

Methods of concrete consolidation shall prevent damage to the temperature monitoring and recording system. Wiring from temperature sensors cast into the concrete shall be protected to prevent movement. Wire runs shall be kept as short as possible. The ends of the temperature sensors shall not come into contact with either a support or concrete form, or reinforcing steel.

When any equipment used in the temperature control and monitoring and recording system fails during the mass concrete construction operation, the Contractor shall take immediate remedial measures to correct the situation as specified in the Thermal Control Plan.

Temperature reading will begin when mass concrete placement is complete. Temperature readings will continue until the maximum temperature differential (not maximum temperature) is reached and a decreasing temperature differential is confirmed as defined in the Thermal Control Plan. Furnish a copy of all temperature readings daily.

If monitoring indicates that the temperature differential is approaching the maximum temperature differential of 35 degrees F, the Contractor shall take immediate corrective action as defined in the Thermal Control Plan to retard further increase of the temperature differential. The Contractor will make the necessary revisions to the approved Thermal Control Plan to satisfy the

temperature control requirements on future placements. Revisions to the plans must be approved by the Engineer prior to implementation.

§555-3.13 - Damaged or defective concrete, applies with the following additions:

If mass concrete temperature differentials are exceeded, provide all analyses and test results deemed necessary by the D.C.E.S. for determining the structural integrity and durability of the mass concrete element, to the satisfaction of the D.C.E.S.. The Department will make no compensation, either monetary or time, for the analyses, tests or any impacts upon the project.

Any cracks in the structural element greater than 0.016 inches resulting from the contractor's inability to properly maintain concrete temperature differentials, shall be repaired using epoxy injection at no additional cost to the Department. The effectiveness of repairs shall be demonstrated by the contractor using evaluation methods acceptable to the Department. The Engineer-In-Charge will be responsible for accepting or rejecting the repairs after the field evaluation.

METHOD OF MEASUREMENT:

Cubic yards as per §555-4.

BASIS OF PAYMENT:

§555-5, including the cost of the mix design and Thermal Control Plan in the unit bid price per cubic yard

ITEM 555.80010001 - CRACK SEALING BY EPOXY INJECTION (PREVENTION)
ITEM 555.80020001 - CRACK REPAIR BY EPOXY INJECTION (RESTORATION)

DESCRIPTION: Install injection ports, seal the crack opening, inject the crack with epoxy (full depth for restoration work, or as deep as conditions allow for prevention work), and restore the sealed surface to a flush condition in areas visible to the public. Perform the work at locations indicated on the contract plans or where directed by the Engineer.

PREVENTION - use in contaminated, cracked concrete areas to prevent movement and protect reinforcing.

RESTORATION - use in uncontaminated cracked concrete areas to restore structural integrity. Take verification cores for payment. Have an experienced epoxy manufacturer representative present until the work is acceptable to the Engineer.

MATERIAL REQUIREMENTS:

1. Crack Sealant - epoxy paste that completely cures in 4 hours or less and retains the injected epoxy. Any other type of crack sealant is subject to a project demonstration and approval by the Engineer.

2. Low Viscosity Injection Epoxy - Manufacturer certified to meet ASTM C881, Type I or IV, Grade 1, Class B or C (as temperature conditions require.)

3. Vertical & Overhead Patching Material (Approved List) - (for ITEM 555.80020001) §701-08

INJECTION EQUIPMENT: Use equipment in good working order, as approved by the Engineer, with the following features:

- Separate feed lines to the mixing chamber
- Automatic mixing and metering pump
- Ability to thoroughly mix the epoxy components in the mixing chamber
- Operator control of the epoxy flow from the mixing chamber
- Clean, legible, accurate pressure gauges easily viewable by the operator
- Ability to provide an uninterrupted pressure head to continually force epoxy into the cracks
- Injection pressure from 0 to at least 200 PSI
- Capable of metering each epoxy component to within 3.0% of the epoxy manufacturer's mix ratio

Un-reacted epoxy components may be stored overnight in separate reservoirs and feed lines.

Before starting the work, demonstrate to the Engineer the ability of the equipment to meter and mix epoxy components to the required mix ratio. Ratio accuracy may be determined by simultaneously metering each component into separate, clean, accurately graduated, volumetric containers, or another procedure approved by the Engineer. Also, activate the automatic mixing and metering pump, mix a small amount of injection epoxy, and waste it into a disposable container. The Engineer will observe this trial operation and be satisfied the equipment is working properly, and the epoxy is mixed with no streaks.

CONSTRUCTION DETAILS:

1. Crack and Surface Preparation. Remove all debris or contaminants accessible within the cracks by using hand tools, water blasting or oil-free high pressure air blasting, vacuuming, or other methods suitable to the Engineer. Epoxy resin will not penetrate: compacted, water or oil soaked debris. Allow free moisture within the crack to be absorbed before injecting epoxy. Remove all materials, including moisture, from the surface adjacent to the crack which might interfere with bonding of the crack sealant.

2. Injection Port Installation. Attach injection ports to the prepared surface by placing them onto (surface adapters) or into the cracks (socket ports) and affixing with crack sealant. Larger cracks may be ported by inserting an anchored tube into the crack.

   Use positive connection port designs to connect injection equipment to the ports. Other injection port designs and attachment methods, where worker fatigue would not be a problem, require approval by the Engineer.

   Use the following general guidelines for spacing injection ports when cracks are uniform in width through the structure. For cracks that get tighter with depth, double this spacing. Intermediate ports may be placed for observation. To permit maximum flow into the void, position ports on the wider crack sections and at intersections, rather than at an exact spacing.

   If these guidelines cannot be followed, use port locations approved by the Engineer. Port spacing may be modified by the Engineer as experience is gained, or when cores are taken to determine penetration.

   FOR CRACKS COMPLETELY THROUGH A MEMBER

   A. Cracks accessible from one side - space the ports not less than the thickness of the member.

   B. Cracks accessible from both sides - space the ports not less than twice the thickness of the member and stagger them relative to the ports on the opposite side. Make the stagger between ports (on opposite sides of the member) at least the thickness of the member.

   Place the endmost ports at the ends of the crack so as to insure complete filling of the crack.

   FOR MULTIPLE CRACKS ALL OVER A MEMBER.
   Space the ports as far apart as practical, but not less than 8” from one another. An 8” spacing presumes a 4” penetration in each direction, if the adjacent ports are not plugged when epoxy reaches them. For fine cracks that taper to an end, place the endmost ports about 4” from the end.

3. Crack Seal. After port installation, seal the crack opening with crack sealant, being careful not to plug the injection ports. Allow the crack sealant to cure completely before injecting epoxy.

   Apply crack sealant only when surface and ambient temperatures are above 50º F.

4. Port Flushing. Prior to any epoxy injection, flush critical ports with oil-free compressed air to verify that air exits from all the installed ports, dry the cracks, and check for leaks.

5. Epoxy Injection. Perform epoxy injection only when the surface and ambient temperatures are above 45º F and are not expected to fall below 45º F during the next 24 hours.

   UNIFORM WIDTH CRACKS - start toward the middle of a horizontal crack and work outward, or the lowest point of a sloping or vertical crack and work upward.

   VARIABLE WIDTH CRACKS - start at the widest points of all types of cracks and work outward. Secure the feed line to the first port. Initiate and continue flow until epoxy exits from the adjacent port. (Plug observation ports and continue through the same port to achieve maximum penetration.) Temporarily stop the injection process, remove the feed line, and seal the port. Attach the feed line to the adjacent port and repeat this procedure along the crack until the last port is sealed.

   Generally, use higher pressures when injecting narrow deep cracks, medium to low for wider cracks, and lowest pressures when injecting a delaminated area or an area susceptible to lifting. Low pressure applied for a longer duration is often more effective than high pressure applied for a shorter duration.

   Replenish the epoxy supply in the mixing equipment before it is exhausted. Thoroughly stir each epoxy component both before and after adding it to its respective component in the mixing equipment. Exercise care to assure a continuous injection operation.

   Allow the epoxy to fully cure prior to performing subsequent work in the repaired area.

   In the event of leakage from a crack, stop the injection process until the leak is sealed. When any work stoppage exceeds 15 minutes, clean the mixing chamber and flush the line that carries mixed epoxy. Flush with a suitable solvent, followed by air.

6. For ITEM 555.80020001 CRACK REPAIR BY EPOXY INJECTION (RESTORATION), take cores ranging in diameter from 1 to 4”, as approved by the Engineer, to verify full penetration by epoxy and its cure. Take a representative core from each structural element, or one from every 100 feet of crack repaired, whichever is greater, at locations approved by the Engineer. The Engineer will retain the cores and determine if they are acceptable for payment. Patch the holes with Vertical & Overhead Patching Material.

   More than one core may be necessary to obtain an acceptable sample from cracks that diverge below the surface. (To avoid cutting reinforcing, the core drill may be angled to intercept a crack behind the reinforcing.)

7. Clean Up. In all areas visible to the public, as determined by the Engineer, remove spillage, the ports and crack sealant until flush with the adjacent surface. Remove stains and repair any damage to the satisfaction of the Engineer at no additional cost.

ITEM 555.80010001 - CRACK SEALING BY EPOXY INJECTION (PREVENTION)
ITEM 555.80020001 - CRACK REPAIR BY EPOXY INJECTION (RESTORATION)

METHOD OF MEASUREMENT: The Engineer will measure the work as the number of linear feet of crack sealed or repaired, as specified.

BASIS OF PAYMENT: Include the cost of all labor, materials, and equipment necessary to complete the work in the unit price bid per linear foot. For ITEM 555.80020001 CRACK REPAIR BY EPOXY INJECTION (RESTORATION), also include the cost of coring and repairing the core holes.

For ITEM 555.80010001 CRACK SEALING BY EPOXY INJECTION (PREVENTION), the Engineer will authorize payment after the measured length of crack has been sealed and the surface cleaned.

For ITEM 555.80020001 CRACK REPAIR BY EPOXY INJECTION (RESTORATION), the Engineer will authorize payment after the measured length of crack has been repaired as verified by cores, the core holes patched and the surface cleaned.

ITEM 557.01040018 - LIGHTWEIGHT, HIGH - PERFORMANCE SUPERSTRUCTURE SLAB WITH INTEGRAL WEARING SURFACE - BOTTOM FORMWORK REQUIRED
ITEM 557.05040018 - LIGHTWEIGHT, HIGH - PERFORMANCE SUPERSTRUCTURE SLAB WITH INTEGRAL WEARING SURFACE - BOTTOM FORMWORK NOT REQUIRED
ITEM 557.07040018 - LIGHTWEIGHT, HIGH - PERFORMANCE SUPERSTRUCTURE SLAB WITH SEPARATE WEARING SURFACE - BOTTOM FORMWORK REQUIRED
ITEM 557.09040018 - LIGHTWEIGHT, HIGH - PERFORMANCE SUPERSTRUCTURE SLAB WITH SEPARATE WEARING SURFACE - BOTTOM FORMWORK NOT REQUIRED

DESCRIPTION. Furnish and place lightweight, high performance (Class HP) concrete to construct superstructure slabs as shown in the contract documents.

MATERIALS. Use materials meeting §557-2. Perform additional work as follows:

A. Design. Design a lightweight, high-performance concrete mixture, proportioned according to the American Concrete Institute Manual of Concrete Practice, ACI 211.2, Standard Practice for Selecting Proportions for Structural Lightweight Concrete.

1. Produce a homogeneous mixture of cement, pozzolan (Fly Ash or GGBFS), microsilica, fine aggregate, lightweight coarse aggregate, air entraining agent, normal range set-retarding, water-reducing admixture, and water, as designed.

2. Use Type I, I/II, II (§701-01) or Type SF (§701-03) cement. Use a minimum cementitious content of 675 lb/yd³. Use 15-20% pozzolan (§711-10, Flyash, or §711-12 GGBFS), and 6-10% microsilica (§711-11).

3. Use lightweight coarse aggregate conforming to §703-10, with a gradation in the 3/4 inch to No. 4 size designation in ASTM C330, Table 1.

4. Determine the cement content for each trial batch by means of a yield test according to ASTM C138.

a. At least 10 working days prior to concrete placement, provide the Materials Engineer with a copy of the trial mix design with the following data:

- Fine and coarse aggregate (saturated, surface dry condition) content in lb/yd³.
- Cementitious content in lb/yd³.
- Water content in lb/yd³.
- Unit weight of freshly mixed concrete in accordance with ASTM C138.
- Dry unit weight in accordance with ASTM C567.
- 28-day compressive strengths.
- Batch quantities of all materials as they will appear on the batch record.

b. The Materials Engineer, or their representative, will approve the batch quantities prior to use. Use these values to manufacture all lightweight concrete for this project, and periodically correct the batch weights to account for changes in the fine aggregate fineness modulus and aggregate moisture contents in accordance with Materials Method 9.1, or current Department directives.

B. Stockpile Handling. Construct lightweight coarse aggregate stockpile(s) at the production facility so as to maintain uniform moisture throughout the pile. Continuously and uniformly sprinkle the stockpile(s) with water using a sprinkler system approved by the Materials Engineer. Soak for a minimum of 48 hours, or until the stockpile has achieved a

minimum internal moisture content of 15% by weight. If a steady rain of comparable intensity occurs, turn off the sprinkler system.

If the rain ceases prior to the end of the wetting period, restart the sprinkling system. At the end of the wetting period, or when a rainfall ceases beyond the end of the wetting period, allow stockpiles to drain for 12 to 15 hours immediately prior to use.

C. Sampling of Materials. The Materials Engineer's representative, will take a 1 liter sample of microsilica in accordance with Materials Method 9.1, or current Department directives, for each day's placement for testing. Sampling of other materials will be at the direction of the Regional Materials Engineer.

D. Batching. After the materials have been accepted for this work, determine the proportions for concrete and equivalent batch weights based on trials made with materials to be used in the work.

• If densified microsilica powder is used and added independently - weigh cumulatively in the following order: cement, fly ash (or GGBFS), then microsilica. Base the batching tolerance of ± 0.5 % on the total weight of cementitious material, for each material draw weight.

• If densified microsilica powder is used as part of blended cement - weigh cumulatively in the following order: blended cement, then fly ash (or GGBFS). Base the batching tolerance of ± 1% on the total weight of cementitious material, for each material draw weight.

E. Compressive Strength Determination. Achieve an average 28-day compressive strength of 3600 psi, or greater, with no individual cylinder compressive strength less than 3000 psi.

F. Density Determination. Produce concrete with an average dry unit weight ranging from 110 to 115 lb/ft³ when tested in accordance with ASTM C567.

CONSTRUCTION DETAILS. Apply the provisions of §557-3 and the following modifications:

A. Concrete Manufacturing and Transporting. Add the following to §557-3.01:

1. Use slump, unit weight and air tests as a control measure to maintain a suitable consistency. Perform slump, unit weight and air tests according to Materials Method 9.2. Determine air content by the volumetric method (roll-a- meter) as described in ASTM C173. Air content and slump placement limits are:

	Minimum	Desired	Maximum
Air Content (%)	5.0	6.5	8.0
Slump (inches)	$2\ ^{1}/_{2}$	3-5	5

2. If the lightweight coarse aggregate moisture content at the time of batching is less than saturated surface dry (SSD), introduce the coarse aggregate, along with approximately ⅔ of the total mixing water, into the mixer and mix for a minimum of 10 minutes, then continue batching the remaining ingredients. If the coarse aggregate is in an SSD condition, batch the coarse aggregate routinely with the fine aggregate, admixtures, cement, fly ash (or GGBFS), microsilica, and mixing water, then mix completely.

3. Have the lightweight aggregate manufacturer supply a service representative at the site for the first two days of concrete placement operations to assist in the control of lightweight concrete mixing and placement.

B. Handling, Placing and Finishing. Handle and place concrete according to §557-3.05, except that pumping is not permitted. When an integral wearing surface is required, finish the concrete according to 557- 3.07. If the concrete will be overlaid with a separate wearing surface, finish the surface according to 557-3.09.

C. Testing. Test the concrete according to Materials Method 9.2. The unit mass of the fresh concrete during placement should be compared to that which was submitted with trial mix design. Make adjustments to the concrete mix at the batching facility based on slump, unit weight and air tests. The Engineer will cast cylinders, in sets of 2 individual cylinders, at a frequency of 1 set for each 50 yd^3, or fraction thereof actually placed. A minimum of 1 set will represent each day's concrete placement.

D. Curing. Cure the concrete according to §557-3.11, except that only continuous wetting is allowed. In cold weather, the provisions of §557-3.12 shall apply.

E. Repairs. Make any repairs as per the provisions of §557-3.16. Proposed repairs require Deputy Chief Engineer, Structures approval.

F. Rejection of Concrete. The Engineer will reject any concrete represented by a 28-day cylinder set with an average compressive strength less than 3600 psi, or an individual cylinder with a compressive strength less than 3000 psi.

G. Loading Limitations. The loading limitations of §557-3.14 apply, except that concrete cylinder sets designated for early loading must attain an average compression strength of 3600 psi, or greater, with no individual cylinder less than 3000 psi.

METHOD OF MEASUREMENT. Apply all of the provisions of §557-4.

BASIS OF PAYMENT. Apply all of the provisions of §557-5.

ITEM 557.6401XX03 - PRECAST CONCRETE DECK - TYPE XX FRICTION
ITEM 557.6403XX03 - PRECAST CONCRETE APPROACH SLAB - TYPE XX FRICTION
ITEM 557.11010003 - INTEGRAL PRECAST CONCRETE BARRIER

DESCRIPTION.

Furnish and place precast concrete deck, precast concrete approach slab and integral precast concrete barrier with ultra high performance concrete (UHPC) joints. The maturity method shall be used to estimate the in-place UHPC strength. The time required before removal of the forms and loading of the structure will be determined based on the estimated in-place UHPC strength. "Panels" refers to both the concrete deck and to the approach slab.

XX = Friction Type
- 01 - Type 1 Friction
- 02 - Type 2 Friction
- 03 - Type 3 Friction
- 09 - Type 9 Friction

MATERIALS

PRECAST CONCRETE PANELS: Materials used in this work shall conform to the NYSDOT Prestressed Concrete Construction Manual (PCCM)-Current Edition and the following:

STEEL EMBEDMENTS. Steel embedments for the panel leveling devices and hold down devices shall be installed in the shop based upon the locations shown on the shop drawings.

Leveling Bolts	ASTM F568M, Class 4.6	

CONCRETE

28 Day Compressive Strength	5000 psi	(Minimum)
Lifting Strength	3000 psi	(Minimum)
Epoxy Coated Bar Reinforcement	709-04	
Mechanical Connectors	709-10	
Water	§712-01	
Aggregates (Friction Type)	501-202.B	

PRECAST CONCRETE APPROACH SLAB
The supplier must demonstrate a system to place the approach slab using a grout bed such that the approach slab is fully supported at the proper line and grade.

INTEGRAL PRECAST CONCRETE BARRIER: The requirements of the PCCM and the following shall apply.

Tolerances:

1)	Bar Reinforcement Cover	-0, + ½ inch
2)	Width of Unit at the top	-0, + ¼ inch
3)	Width of Unit at the bottom	-0, + ½ inch
4)	Surface deviation from theoretical centerline	½ inch in 20 feet
5)	Vertical Alignment (deviation from a line parallel to theoretical grade)	½ inch in 20 feet
6)	Horizontal and Vertical Alignment (between adjacent units)	3/16 inch

JOINT MATERIAL UHPC: The material shall be Ultra High Performance Concrete, all components supplied by one manufacturer. Materials commonly used in UHPC are:

Fine aggregate
Cementitious material
Super plasticizer
Accelerator
Steel Fibers

UHPC material shall meet the following, 28 days unless otherwise noted:

Minimum Compressive Strength (ASTM C39)	
High Heat-Treated*	≥ 25 ksi
Medium Heat-Treated 12 hours**	≥ 12 ksi
Not Heat-Treated 14 days***	≥ 21 ksi
Prism Flexural Tensile toughness (ASTM C1018; 12 in. span)	$I_{30} \geq 48$
Long-Term Shrinkage (ASTM C157; initial reading after set)	≤ 766 microstrain
Chloride Ion Penetrability (ASTM C1202)	≤ 250 coulombs
Chloride Ion Penetrability (AASHTO T259; ½ in. depth)	< 0.07 oz/ft^3
Scaling Resistance (ASTM C672)	y < 3
Abrasion Resistance (ASTM C944 2x weight; ground surface)	< 0.025 oz. lost
Freeze-Thaw Resistance (ASTM C666A; 600 cycles)	RDM > 96%
Alkali-Silica Reaction (ASTM C1260; tested for 28 days)	Innocuous

* High Heat-Treated - According to manufacturer's recommendation, temperature not to exceed 250ºF.
** Medium Heat Treated temperatures not to exceed 120ºF
*** Not Heat Treated temperature not to exceed 70ºF
Results of all the tests above, conducted by an AASHTO accredited testing lab shall be submitted to the DCES along with the installation drawings. Provide to the DCES a list of bridge projects in which the proposed UHPC material has been used as joint fill between precast concrete elements (within or outside the USA). The DCES reserves the right to reject a proposed UHPC material which lacks a proven track record in precast concrete joint filling in bridge applications.

Storage: The contractor shall assure the proper storage of premix, fibers and additives as required by the supplier's specifications in order to protect materials against loss of physical and mechanical properties.

Acceptance Testing: Note: acceptance testing will be waived if the same material from the same supplier has already been tested according to this standard. The Contractor shall complete the testing of the UHPC a minimum of one month before placement of the joint. The testing sequence will include the submission of a plan for casting and testing procedures to the DCES for review and approval followed by casting and testing according to the approved plan.

Casting and testing must include the following:

A minimum of 12 cylinders 3in. x 6 in. shall be cast.

The temperature during curing shall be as per heat treatment temperature limits established in this specification. 2 cylinders shall be tested each testing interval. Testing intervals are at 10 hours, 12 hours, 14 hours, and 24 hours. The compressive strength shall be measured by ASTM C39. Only a concrete mix design that passes these tests may be used to form the joint.

Pullout Test: Cast 6 additional cylinders 12 in. diameter and 7.5 in. deep. Each cylinder shall have one 32 in. long epoxy-coated reinforcing bar cast in the center of the circular face. The axis of the bar shall be perpendicular to the formed surface. 3 of the bars shall be #6 bars embedded 5 in. deep and 3 of the bars shall be #4 bars embedded 3 in. deep. These cylinders will be kept wet for four days then delivered to the Materials Bureau for testing according to Test Method No. NY 701-14 E. Contact the Materials Bureau prior to casting for specific instructions on preparing the test specimens. The test will be performed as soon as practical after the corresponding compressive strength samples reach 12 ksi. Acceptance criteria for pullout testing shall be when there is complete tensile failure of the reinforcing bar, prior to pullout from the concrete or failure of the concrete.

EQUIPMENT FOR MATURITY TESTING:

Use a Maturity Meter and thermocouples that can:

- $ Provide a maturity value based on the Equivalent Age or Temperature Time Method as detailed in ASTM C 1074-11.
- $ Continuously log and store maturity data.
- $ Accurate to within +/- 1° F when the meter is calibrated as per the manufacturer=s instructions.
- $ Take readings every half hour for the first 48 hours and every hour after that at a minimum.
- $ Print data and/or download it into a spreadsheet.

METHODOLOGY FOR MATURITY TESTING:

The procedure for utilizing the maturity method to determine in-place UHPC strengths includes three steps: development of the strength-maturity relationship, monitoring the maturity of the placement, and regular validation of the strength maturity relationship. Any changes in the mix design, its components, or proportions will require that a new strength-maturity relationship be developed.
The strength-maturity relationship shall be developed one month prior to construction. Continue data collection for the strength-maturity relationship after acceptance of the maturity value until the strength reaches 21 ksi.

A procedure to develop the strength-maturity relationship shall be submitted to the DCES for review and approval along with the shop drawings. The submitted procedure shall include all necessary information for the development of the strength maturity relationship. All necessary testing included in the procedure shall be conducted by an AAHSTO accredited testing lab.

CONSTRUCTION

DRAWINGS FOR PRECAST CONCRETE PANELS AND BARRIER

Shop drawings and installation drawings shall be prepared and submitted as per the requirements of the Prestressed Concrete Construction Manual, (PCCM), and the following:
The submitted drawings shall include details of lifting and handling of panels in the production facility and their storage, transportation, handling and storage at the construction site. Lifting holes will not be

permitted. The proposed handling and lifting shall be such that the maximum tensile stress in concrete due to handling and erection loads shall not exceed $0.15(f'_{ci})^{1/2}$, where $f'ci$ is the concrete compressive strength at the time being considered. Calculations showing actual concrete stresses based upon the proposed support locations and expected dynamic loading of the panels during handling, storage and transportation of the panels shall be prepared by a Professional Engineer and shall be submitted along with the drawings. These drawings and calculations shall be stamped and signed by a Professional Engineer.

Integral precast concrete barrier shall be cast integrally with the precast concrete deck prior to shipping. Proposed procedures for the casting, handling, and shipping shall be included in the drawings for the precast concrete panels.

The proposed method of mixing, placing, and curing the UHPC joints shall be shown on the installation drawings. The Contractor shall perform qualification testing using maturity method and the results shall be shown on the installation drawing to demonstrate that the proposed method of curing will achieve the required strength at the required time.

FABRICATION OF PRECAST CONCRETE PANELS

Fabrication shall meet the requirements of the PCCM and the following:

Fabrication Tolerances

1. Width (transverse direction of the bridge): +1/8, -1/8 in.
2. Length (longitudinal direction of the bridge): +1/8, -1/8 in.
3. Depth (overall): +1/8, -0 in.
4. Bulkhead alignment (deviation from square or designated skew)
   - Vertical ¼ in.
   - Horizontal ¼ in.
5. Horizontal alignment (deviation from straight line parallel to centerline of unit):
   - ¼ in. for 40 ft length
   - 3/8 in. for 40 ft to 60 ft length
   - 1/2 in. for greater than 60 ft length

Welding of steel shall comply with the requirements of the New York State Steel Construction Manual.

Placing Concrete, Curing and Finishing

All requirements stipulated in PCCM shall apply except for the following:
After curing, all form release material and all other forming material adhering to the shear keyway and block out concrete shall be removed. Shear key faces shall be roughened and blast cleaned.

Shipping and Handling of Precast Panels and Precast Concrete Barrier. Shall be as per approved drawings.

Loading of Panels. Equipment weighing more than 2500 pounds shall not be permitted on the precast units between the initial set of the UHPC and the time the UHPC has reached a minimum strength of 10 ksi.

Mixing and Placing UHPC Joints and Haunches. Specifications in the PCCM and the following:

Thoroughly and continuously wet the concrete contact area for 24 hours prior the placing of UHPC, keep wet and remove all surface water just prior to UHPC placement.

INSTALLATION REQUIREMENTS FOR DECK SLABS
Installation shall meet the requirements of the PCCM and the following:

1. Prior to installing panels, the supporting steel surfaces in contact with the panels or field placed concrete shall be cleaned, including removal of free water, to the satisfaction of the engineer.

2. Installation tolerances shall be as per the approved installation drawings. It is the responsibility of the contractor to develop appropriate controls during the fabrication and installation of the panels so that proper cross slopes and grades are achieved after the diamond grinding operation. Installation drawing shall show the details of the proposed controls.

INSTALLATION REQUIREMENTS FOR APPROACH SLABS

Bed and level slabs in accordance with the system designer's instructions such that the vertical differential across any joint is ¼ in. or less. Slabs shall be placed on grade and have grout pumped underneath to ensure that they are completely supported.

INSTALLATION REQUIREMENTS FOR UHPC
The contractor shall arrange for a representative of the UHPC supplier to be on site during the placement of the joints until the Contractor's own staff has become well-trained in the use of the material. The representative shall be knowledgeable in the supply, mixing, delivery, placement, and curing of the UHPC material.

GROUTING OF HAUNCHES
Grouting shall meet the requirements of the PCCM, except that the requirement related to post-tensioning shall not apply. Details of grouting ports, vents, method of pumping the grout, equipment with necessary back up shall be shown on the installation drawing. Required QC for the grouting also shall be listed on the drawings.

PRE-INSTALLATION MEETING: Convene a preplacement meeting 7 to 14 calendar days before the planned start of slab installation. The contractor shall arrange for an on site meeting with representatives from the UHPC and the precast system suppliers. The contractor's staff and the NYSDOT Engineer and Inspectors shall attend the site meeting. The objective of the meeting will be to clearly outline the procedures for placing and leveling the precast concrete panels and for mixing, transporting, finishing and curing of the UHPC material.

Form Work, Batching and Curing
The design and fabrication of forms shall follow approved installation drawings and shall follow the recommendations of the manufacturer. All the forms for UHPC shall be constructed from plywood or approved equal. The forms shall be coated to prevent absorption of water using a form release agent from the Department's Approved List of Materials.

The contractor shall follow the batching sequence as specified by the supplier and approved by the DCES. The surface of the UHPC field joints shall be filled as shown on the approved drawings.

The UHPC in the form shall be cured according to Manufacturer's recommendations to attain the required strength shown on the contract documents.

Quality Control

The contractor shall measure the slump flow on each batch of UHPC. The slump flow will be conducted using a mini-slump cone. The flow for each batch shall be between 7 in. and 10 in. The slump flow for each batch shall be recorded in the QA/QC log. A copy of the log shall be given to the Engineer.

Estimation of In-Place Strength:

1. Two thermocouples per each UHPC joints, one at each end, shall be installed. The locations of these installations shall be shown on the installation drawings. These locations shall be revised if directed by the DCES. The thermocouple wiring may be connected to reinforcing steel, but probe endings may not be in direct contact with the steel. Consider structural or exposure conditions when placing thermocouples.

2. Listed actions are allowed when the maturity value of all the thermocouples reaches the corresponding strength values listed below.

Action	Strength Requirement
Removal of top forms	10 ksi
Open Bridge deck to Traffic	12 ksi

3. Record and save the maturity data from the meter until the strength reaches 21 ksi. Disconnect the meter and clip all wires flush with the concrete surface.

A continuous read thermocouple or thermistor with a data logger can be used to estimate in place strength. The methodology outlined in ASTM C 1074-11 will be used. The maturity function used to estimate strength will be calculated with the same formula that is used by the maturity meter that established the initial strength maturity relationship. Copies of the calculations will be provided to the engineer.

Validation of the Strength-Maturity Relationship:

For each day of placement, perform validation tests by casting 7 cylinders. Equip one of the cylinders with a thermocouple. Test the cylinders as close as possible to the maturity value corresponding to 21 ksi. Record the maturity value immediately prior to testing. All testing shall be conducted by an AASHTO accredited testing lab. Report the results to the DCES.

If the average value of compressive strength of each pair of cylinders is within 10% of the estimated value, the strength-maturity relationship will be validated. If the average cylinder value is more than 10% below the estimated value, the strength maturity relationship will need to be re-established. If the first four cylinders produce acceptable results, the remainder need not be tested.

The Department may perform additional testing for research purposes. Casting and testing in addition to that required in this spec will be performed by NYSDOT personnel.

In case of loss of required data, or non verification of the strength-maturity relationship, use the cylinders cast above, one pair at a time, to verify the strength.

ITEM 557.6401XX03 - PRECAST CONCRETE DECK - TYPE XX FRICTION
ITEM 557.6403XX03 - PRECAST CONCRETE APPROACH SLAB - TYPE XX FRICTION
ITEM 557.11010003 - INTEGRAL PRECAST CONCRETE BARRIER

METHOD OF MEASUREMENT. For precast concrete bridge decks and precast concrete approach slabs apply all the provisions of §557-4. For precast concrete bridge barrier apply all the provisions of §569-4.

BASIS OF PAYMENT. For precast concrete bridge decks and precast concrete approach slabs apply all the provisions of §557-5. For precast concrete bridge barrier apply all the provisions of §569-5.

ITEM 557.2500NN16 - CRACK SEALING USING HIGH MOLECULAR WEIGHT METHACRYLATE – LINEAR CRACKS

DESCRIPTION

This work shall consist of furnishing and installing Crack Sealing Using High Molecular Weight Methacrylate in accordance with the contract documents and as directed by the Engineer.

MATERIALS

The high molecular weight methacrylate (HMWM) resin shall be low viscosity and non-fuming. Acceptance is based on the manufacturer certifying that it conforms to the following, and the contractor forwarding the certification to the DCES:

Viscosity	Less than 25 cps when measured according to ASTM D2849
Density	Greater than 8.4 lb/gal. @ 77º F.
Flash Point	Greater than 200º F.
Vapor Pressure	Less than 1.0 mm Hg @ 77º F. (ASTM D 323)
TG (DSC)	Greater than 136º F (ASTM D3418)
Gel Time	Greater than 40 minutes for 3.5 ounces
Percent Solids	Greater than 90 % by weight
Bond Strength	Greater than 1522.3 psi (ASTM C882)

Sand The sand shall be commercial quality dry blast sand. 95% of the sand shall pass the #8 sieve, and 95% shall be retained on the #30 sieve.

The container shall include the following information: The name of the manufacturer, the brand name of the product, the date of manufacture.

CONSTRUCTION DETAILS

Abrasive blast clean the area to be treated, removing all contaminants from the surface. Clean all surfaces and cracks using compressed air which is free of oil and moisture.

Do not apply sealers if rain is expected within 12 hours of completion. Apply sealers to clean, dry surfaces when the surface temperature is at least 50º F, and if near 50º F, rising. The sealer shall be mixed and applied according to the manufacturer's instructions and no more than 5 gallons at a time. Pour sealer into the cracks.

After the resin has been applied, at least 20 minutes shall elapse before applying the sand. The sand shall be broadcast at a rate of approximately two pounds per square yard, completely covering the sealer.

The sealer must be tack-free before traffic is permitted to resume.

METHOD OF MEASUREMENT

This work will be measured as the number of feet of Crack Sealing Using High Molecular Weight Methacrylate satisfactorily furnished and installed.

BASIS OF PAYMENT

The unit price bid shall include the cost of furnishing all labor, materials, and equipment necessary to satisfactorily complete the work.

ITEM 557.2600NN16 - CRACK SEALING USING HIGH MOLECULAR WEIGHT METHACRYLATE - FLOODING

DESCRIPTION

This work shall consist of furnishing and installing Crack Sealing Using High Molecular Weight Methacrylate in accordance with the contract documents and as directed by the Engineer.

MATERIALS

The high molecular weight methacrylate (HMWM) resin shall be low viscosity and non-fuming. Acceptance is based on the manufacturer certifying that it conforms to the following, and the contractor forwarding the certification to the DCES:

Viscosity	Less than 25 cps when measured according to ASTM D2849
Density	Greater than 8.4 lb/gal. @ 77º F.
Flash Point	Greater than 200º F.
Vapor Pressure	Less than 1.0 mm Hg @ 77º F. (ASTM D 323)
TG (DSC)	Greater than 136º F (ASTM D3418)
Gel Time	Greater than 40 minutes for a 100 gram mass
Percent Solids	Greater than 90 % by weight
Bond Strength	Greater than 1522.3 psi (ASTM C882)

Sand The sand shall be commercial quality dry blast sand. 95% of the sand shall pass the #8 sieve, and 95% shall be retained on the #30 sieve.

The container shall include the following information: The name of the manufacturer, the brand name of the product, the date of manufacture.

CONSTRUCTION DETAILS

Abrasive blast clean the area to be treated, removing all contaminants from the surface. Clean all surfaces and cracks using compressed air which is free of oil and moisture.

Do not apply sealers if rain is expected within 12 hours of completion. Apply sealers to clean, dry surfaces when the surface temperature is at least 50º F, and if near 50º F, rising. The sealer shall be mixed and applied according to the manufacturer's instructions and no more than 5 gal. at a time. Sweep, pour, squeegee, or spray the area to receive the sealers, allowing the sealers to flow into the cracks. If the manufacturer does not recommend an application rate, use 8.5 to 11.8 square yards per gallon, as needed.

After the resin has been applied, at least 20 minutes shall elapse before applying the sand. The sand shall be broadcast at a rate of approximately two pounds per square yard, completely covering the sealer.

The sealer must be tack-free before traffic is permitted to resume.

METHOD OF MEASUREMENT

This work will be measured as the number of square yards of Crack Sealing Using High Molecular Weight Methacrylate satisfactorily furnished and installed.

BASIS OF PAYMENT

The unit price bid shall include the cost of furnishing all labor, materials, and equipment necessary to satisfactorily complete the work.

ITEM 557.6601NN16 - ULTRA-HIGH PERFORMANCE CONCRETE (UHPC)

DESCRIPTION

This work shall consist of furnishing and installing ULTRA-HIGH PERFORMANCE CONCRETE (UHPC) in accordance with the contract documents and as directed by the Engineer. Strength determination is permitted to be made through compressive testing or maturity testing. Ultra-High Performance Concrete (UHPC) includes, but is not limited to precast deck panel joints, closure pours, link slabs, and joint headers. It does not include bridge deck overlays.

MATERIALS

UHPC shall be accepted based on the Manufacturer and product designation appearing on the Approved List under Bridge Joint Systems. Other materials can be accepted if they meet the requirements below:

UHPC Acceptance Criteria: UHPC which is not on the Approved List can be accepted by meeting the material requirements below. Contact DCES for testing and acceptance procedures. The preparation for the testing and the acquisition of results for the testing may take several months. No extension of time will be granted for completion of testing. All components of Ultra-High Performance Concrete shall be supplied by one Manufacturer. Materials commonly used in UHPC are:
Fine aggregate
Cementitious material
Super plasticizer
Accelerator
Steel Fibers 2% minimum by volume

UHPC Material Properties
UHPC material shall meet the following, at 28 days unless otherwise noted:

Minimum Compressive Strength (ASTM C39)	18 ksi
Minimum Compressive Strength (four days)	12 ksi
Flexural Tension Stress, (ASTM C1609, first crack, minimum	1.5 ksi
Flexural Tension Stress (ASTM C1609), peak, minimum	2.0 ksi
Flexural Tension ratio, peak to first crack, minimum	1.25*
Long-Term Shrinkage (ASTM C157; initial reading after set)	≤ 766 microstrain
Scaling Resistance (ASTM C672)	y < 3
Abrasion Resistance (ASTM C944 2x weight; ground surface)	< 0.025 oz. lost
Freeze-Thaw Resistance (ASTM C666A; 600 cycles)	RDM > 96%
Alkali-Silica Reaction (ASTM C1260; tested for 28 days)	Innocuous

*If the peak stress exceeds the first crack by at least 100 psi, the first crack stress need not be taken as greater than 1.8 ksi when computing this ratio.

Cast 6 additional cylinders 12 in. diameter and 7 ½ in. deep. Each cylinder shall have one grade 60 epoxy-coated reinforcing bar 32 inches long cast in the center of the circular face. The axis of the bar shall be perpendicular to the formed surface. 3 of the bars shall be #6 bars embedded 5 inches deep and 3 of the bars shall be #4 bars embedded 3 inches deep. These cylinders will be kept wet until delivered to the Materials Bureau for testing according to Test Method No. NY 701-14 E. Contact the Materials Bureau prior to casting for specific instructions on preparing the test specimens. The test will be performed as soon as practical after the corresponding samples reach 12 ksi.
This test is a pullout test. The samples pass if the stress in the bars reaches 60 ksi without the UHPC failing and without the bars pulling out of the UHPC.

High Weight Methyl Methacrylate (HMWM) (used to seal leaks for pours which must be watertight)
The HMWM resin shall be low viscosity and non-fuming.
Acceptance is based on the Manufacturer certifying that it conforms to the following, and the contractor forwarding the certification to the DCES:
Viscosity Less than 25 cps when measured according to ASTM D2849
Density Greater than 8.4 lb/gal. @ 77º F.
Flash Point Greater than 200º F.
Vapor Pressure Less than 1.0 mm Hg @ 77º F. (ASTM D 323)
TG (DSC) Greater than 136º F (ASTM D3418)
Gel Time Greater than 40 minutes for a 100 gram mass
Percent Solids Greater than 90 % by weight
Bond Strength Greater than 1522.3 psi (ASTM C882)
Sand: The sand shall be commercial quality dry blast sand. 95% of the sand shall pass the #8 sieve, and 95% shall be retained on the #30 sieve.
The container shall include the following information: The name of the Manufacturer, the brand name of the product, the date of manufacture.

CONSTRUCTION DETAILS

Installation Drawings: Preparation, submittal to the DCES, approval, and time for review of Installation Drawings shall be per Section 2 of the PCCM. The proposed method of mixing, placing, and curing the UHPC shall be shown on the installation drawings. When using the maturity method, the Contractor shall use the maturity method data shown on the installation drawing to demonstrate that the proposed method of curing will achieve the required strength at the required time. The Contractor shall arrange for a representative of the UHPC supplier to be on site during the placement of the UHPC until the Contractor's own staff has become well-trained in the use of the material. The representative shall be knowledgeable in the supply, mixing, delivery, placement, and curing of the UHPC.

Pre-Pour Meeting

Prior to the initial placement of the UHPC, the contractor shall arrange for an onsite meeting with the UHPC representative. The Contractor's staff and the NYSDOT Engineer and Inspectors shall attend the site meeting. The objective of the meeting is to clearly outline the procedures for mixing, transporting, finishing, and curing of the UHPC material.

Storage

The Contractor shall assure the proper storage of premix, fibers, and additives as required by the supplier's specifications in order to protect materials against loss of physical and mechanical properties.

Form Work, Batching, and Curing

The design and fabrication of forms shall follow approved installation drawings and shall follow the recommendations of the Manufacturer. A top form is required. The forms shall be coated to prevent absorption of water.
New concrete surfaces which will bond with UHPC shall have an exposed aggregate finish unless otherwise prohibited. Existing concrete surfaces shall be roughened to an amplitude of 1/8". Thoroughly and continuously wet the existing concrete contact area for 24 hours prior to placing UHPC, keep the surface wet, and remove all surface water just prior to UHPC placement.
The Contractor shall follow the batching sequence as specified by the supplier. The Contractor shall measure the slump flow on each batch of UHPC. The slump flow shall be conducted using a mini-slump cone. The flow for each batch shall be between 7 and 10 inches.
All UHPC shall be placed within ten feet of its final position.

ITEM 557.6601NN16 - ULTRA-HIGH PERFORMANCE CONCRETE (UHPC)

UHPC shall be filled to a minimum of plus $^1/_4$ inch above the intended elevation. The UHPC in the form shall be cured according to Manufacturer's recommendations to attain the required strength. The excess UHPC shall then be ground flush to the required elevation.

Estimation of In-Place Strength

1) Two thermocouples shall be installed per each UHPC placement, one at each end, at half the depth of the placement, and no nearer to an edge than half the depth. The locations of these installations shall be shown on the installation drawings. These locations shall be revised if directed by the DCES. The thermocouple wiring may be connected to reinforcing steel, but probe endings shall not be in direct contact with the steel. Structural and exposure conditions shall be considered when placing thermocouples.
2) Listed actions are allowed when the maturity value of all the thermocouples reaches the corresponding strength values listed below.

Action	**Strength Requirement**
Removal of forms	10 ksi
Open Bridge deck to Traffic	12 ksi

3. Record and save the maturity data from the meter until the strength reaches 18 ksi. Disconnect the meter and clip all wires flush with the concrete surface.
A continuous read thermocouple or thermistor with a data logger can be used to estimate in place strength. The methodology outlined in ASTM C 1074-11 shall be used. The maturity function used to estimate strength shall be calculated with the same formula that is used by the maturity meter that established the initial strength maturity relationship. Copies of the calculations shall be provided to the DCES for record purposes.

Validation of the Strength-Maturity Relationship

For each day of placement, cast 7 – 3 inch x 6 inch cylinders to be used for validation testing. Equip one of the cylinders with a thermocouple. Test the other cylinders as close as possible to the maturity values corresponding to 8, 10, and 12 ksi. Record the maturity value immediately prior to testing. All testing shall be conducted by an AASHTO accredited testing lab. Report the results to the DCES for record purposes.
If the average value of compressive strength of each pair of cylinders is within 10% of the estimated value, the strength-maturity relationship will be validated. If the average cylinder value is more than 10% below the estimated value, the strength maturity relationship will need to be re-established. If the first four cylinders produce acceptable results, the remainder need not be tested.
The Department may perform additional testing for research purposes. Casting and testing in addition to that required in this spec will be performed by NYSDOT personnel.
In case of loss of required data, or non-verification of the strength-maturity relationship, use the cylinders cast above, one pair at a time, to verify the strength.

Watertight Integrity Test

After a placement has reached the required strength, a watertight integrity test shall be performed in accordance with §567-3.01.H. If leakage occurs the Contractor must seal the entire length of the placement using HMWM at no extra cost to the State.

Sealing

Abrasive blast-clean the area to be treated; removing all contaminants from the surface. Clean adjacent surfaces of the leaking areas using compressed air which is free of oil and moisture.

Do not apply sealer if rain is expected within 12 hours of completion. Apply sealer to clean and dry surfaces when the surface temperature is at least 50º F and, if near 50º F, rising. The sealer shall be mixed and applied according to the Manufacturer's instructions and no more than 5 gallons at a time. Pour the sealer over the leaks.

When the HMWM is placed on a driving surface, sand must be applied to provide friction. After the resin has been applied, at least 20 minutes shall elapse before applying the sand. The sand shall be broadcast at a rate of approximately two pounds per square yard, completely covering the sealer. Once the sealer is cured, any loose sand shall be removed from the surface.

The sealer must be tack-free before construction traffic is permitted to resume.

METHOD OF MEASUREMENT

This work will be measured as the number of cubic feet of ULTRA-HIGH PERFORMANCE CONCRETE (UHPC) satisfactorily furnished and installed.

BASIS OF PAYMENT

The unit price bid shall include the cost of furnishing all labor, materials, and equipment necessary to satisfactorily complete the work.

Item Number	*Description*	*Pay Unit*
557.6601NN16	Ultra-High Performance Concrete	Cubic Feet

NN – serialized by location or by type

ITEM 564.20010008 – HOT-DIP GALVANIZING OF STRUCTURAL STEEL

DESCRIPTION

This work shall consist of hot-dip galvanizing of fabricated structural steel members.

MATERIALS

Materials for galvanizing shall meet the requirements of §719-01, Type I.

CONSTRUCTION DETAILS

Hot-dip galvanizing shall be in accordance with the material specifications.

Galvanizing shall be performed consistent with the current New York State Steel Construction Manual.

METHOD OF MEASUREMENT

This work will be measured as the number of pounds of steel hot-dip galvanized and installed as per the contract documents.

BASIS OF PAYMENT

The unit price bid per pound shall include the cost of all labor, materials, and equipment necessary to satisfactorily complete the work including transportation to and from the galvanizing facility and any necessary drilling or reaming. No additional payment will be made for additional fabrication steps required as a result of the galvanizing process.

ITEM 565.20210003 - ELASTOMERIC SLIDING BEARINGS (FIXED)
ITEM 565.20310003 - ELASTOMERIC SLIDING BEARINGS (EXPANSION)

DESCRIPTION

This work shall consist of furnishing and installing Elastomeric Sliding Bearings in accordance with the contract documents and as directed by the Engineer.

MATERIALS

Materials	§565-2.
Stainless Steel	§716-06
Drawings	§716-12

CONSTRUCTION DETAILS

Construction details shall be per §565-3.

METHOD OF MEASUREMENT

This work will be measured as the number of bearings satisfactorily furnished and installed.

BASIS OF PAYMENT

The unit price bid for each bearing shall include the cost of all labor, materials, equipment, and adjustment necessary to complete the work. All material between the bottom of the superstructure, and the top of the substructure, including anchor studs and sole plates, shall be included in the price bid for this item.

Progress Payments. Eighty percent of the quantity will be paid for after the bearing is installed. The remainder of the quantity will be paid for after the bearing is aligned.

Pay Item	Description	Unit
565.20210003	Elastomeric Sliding Bearings (Fixed)	Each
565.20310003	Elastomeric Sliding Bearings (Expansion)	Each

DESCRIPTION

This work shall consist of furnishing all materials and equipment necessary and to apply metalizing in accordance with the contract documents and as directed by the DCES.

Qualification of Metalizing Contractor

The metalizing contractor performing the work shall document previous experience in providing surface preparation for metalizing and metalizing application services in the shop and field, with a minimum history of three (3) successfully completed projects of similar complexity. The contractor shall be certified per the requirements of SSPC-QP 3.

The contractor shall submit experience and qualification records of all personnel performing the work.

Qualification of Thermal Spray Technicians and Personnel

The thermal spray technicians shall be qualified in accordance with ANSI/AWS C2.16 with a minimum passing adhesion of 700 psi, and must hold a certificate of satisfactory completion of training from the equipment manufacturer. The equipment used for qualification shall be equivalent to that used in production.

Each metalizing shift shall have at least one metalizing supervisor, meeting the thermal spray technician requirements, and who will additionally have a minimum of three years documented satisfactory metalizing experience on similar projects.

An SSPC certified Quality Control Supervisor shall be on the thermal spray company's staff and shall provide a Quality Control Plan to the DCES prior to the onset of work. The Quality Control Supervisor shall meet the requirements of Thermal Spray Supervisor as per SSPC-QP 6. Additionally, the Quality Control Supervisor shall have a minimum of five (5) years experience with satisfactory performance in abrasive blast cleaning of steel surfaces according to SSPC-SP 10 and shall have performed similar duties on two successful metalizing projects.

Codes and Standards

The provisions set forth in the latest issue of the following codes and standards shall apply unless otherwise indicated in the contract documents:

ASTM B 833, Standard Specification for Zinc Wire for Thermal Spraying (Metalizing).
ASTM C 633, Test Method for Adhesive/Cohesive Strength of Flame Sprayed Coatings.
ASTM D 4285, Method for Indicating Oil or Water in Compressed Air.
ASTM D 4417, Test Method for Field Measurement of Surface Profile of Blasted Steel.
NACE Standard RP0287, Field Measurement of Surface Profile of Abrasive Blast Cleaned Steel Surfaces Using a Replica Tape.
ASTM D 4541, Test Method for Pull-Off Strength of Coating Using Portable Adhesion Testers.

ASTM E1920, Standard Guide for Metallographic Preparation of Thermal Sprayed Coatings.
ASTM E2109, Standard Test Methods for Determining Area Percentage Porosity in Thermal Sprayed Coatings.
ANSI/AWS C2.16, Guide for Thermal-Spray Operator Qualification
ANSI/AWS C2.18, Guide for the Protection of Steel with Thermal Spray Coatings of Aluminum, Zinc, and Their Alloys and Composites.
SSPC-CS 23.00/AWS C2.23M/NACE No. 12, Specification for the Application of Thermal Spray Coatings (Metalizing) of Aluminum, Zinc, and their Alloys and Composites for the Corrosion Protection of Steel.
SSPC Publication, The Inspection of Coatings and Linings: A Handbook of Basic Practice for Inspectors, Owners, and Specifiers.
SSPC-AB 1, Mineral and Slag Abrasives.
SSPC-AB 2, Specification for Cleanliness of Recycled Ferrous Metallic Abrasives.
SSPC-AB 3, Ferrous Metallic Abrasives.
SSPC-PA 1, Shop, Field, and Maintenance Painting of Steel.
SSPC-PA 2, Measurement of Dry Coating Thickness with Magnetic Gages.
SSPC-QP 3, Standard Procedure for Evaluating Qualifications of Shop Painting Applicators SSPC-QP 6, Standard Procedure for Evaluating the Qualifications of Contractors Who Apply Thermal Spray (Metalizing) for Corrosion Protection of Steel and Concrete Structures
SSPC-SP 1, Solvent Cleaning
SSPC-SP 10/NACE No. 2, Near-White Blast Cleaning.
SSPC-SP 11, Power Tool Cleaning to Bare Metal
SSPC-VIS 1, Guide and Reference Photographs for Steel Surfaces Prepared by Dry Abrasive Blast Cleaning.

Quality Control Plan

Prior to the start of work, the Contractor's QC Supervisor shall provide a written quality control plan and submit it to the DCES for approval. The plan shall include the procedure to be followed and equipment to be used for all processes outlined herein, including surface preparation and metalizing and seal coat application. The plan shall include a method of adhesion testing, thickness measuring, bend test protocol, testing frequency, and MSDS sheets for material utilized on the project. The plan shall outline the quality assurance procedures and any safety precautions that must be followed by workers and inspectors. No work shall commence until the DCES has approved the plan.

Job Reference Standard (JRS)

A job site pass/fail Job Reference Standard, representative of the work to be performed, shall be prepared by the metalizing applicator. The JRS will be used to evaluate the suitability of the application process. The JRS shall be made on a steel plate approximately 18 in. x 18 in. x 0.25 in. and shall be made with the actual equipment and process parameters and procedures (surface preparation, metalizing, sealing, and testing) that shall be used for the contracted work. The JRS shall be made in similar environmental conditions as the work to be performed. Thickness measurements and adhesion tests shall be performed on the JRS per this specification. The JRS

will be deemed unsatisfactory if any of the measurements or test results is less than the values indicated herein.

Metallographic testing shall be performed, in accordance with ASTM E1920 and ASTM E2109, on a JRS meeting the requirements of this section. Porosity of the metalized coating shall be less than 10% with less than 5% air inclusions in the film, and shall be fully bonded to the substrate with no air pockets between the coating and substrate. There shall be no interconnected porosity to the substrate for the contract specified thickness, intended technique of application, number of passes, and thickness applied per pass.

For steel assemblies exhibiting acute angles between structural members to be metalized in the shop after assembly, a similarly scaled steel, blasted mockup must be put together emulating the angles encountered. This mockup shall be metalized by the coating applicator, disassembled and adhesion testing shall be performed on the metalizing in the acute angle, per these specifications. If the mockup fails the adhesion test, the applicator shall change the application technique and/or adjust equipment to obtain proper adhesion results, thickness measurements and appearance requirements in acute angles.

Job Control Record (JCR)

The Contractor shall keep a Job Control Record, detailing the essential job information and the in-process quality control checkpoints required by this standard. The JCR shall include information on safety precautions, and the equipment, parameters, and procedures for surface preparation, thermal spraying, and sealing. Failure to perform production work in a manner consistent with the JCR guidelines will be cause for rejection.

MATERIALS

A. METALIZING

Certified alloy wire is required, and shall be composed of 85% zinc and 15% aluminum by weight. Wire shall meet the requirements of ASTM B-833 Standard Specification for Zinc and Zinc Alloy Wire for Thermal Spraying (Metalizing) for the Corrosion Protection of Steel. The Contractor shall submit a certificate with results of testing for chemical analysis to the DCES, for each lot of wire used on the job. The Contractor shall obtain written certification from the manufacturer of the alloy and will provide the certifications for each lot of wire a minimum of five business days prior to commencement of metalizing.

The metalizing 85/15 alloy shall have a minimum tensile bond of 700 psi.

B. ABRASIVE FOR BLAST CLEANING

Blast media shall be angular steel grit, angular aluminum oxide, or angular crushed slag, evaluated per SSPC-AB 3 for new abrasive material, and shall be capable of producing an angular anchor tooth profile. If abrasive material is to be recycled, the abrasive material shall be

evaluated prior to each reuse per the requirements of SSPC-AB 2. Use of silica sand, steel shot, or any other abrasives that result in a round surface profile is prohibited.

C. SEALER

Sealer shall UV resistant and be a urethane or epoxy polyamide penetrating sealer, type as recommended by the supplier for use on metalized surfaces. The sealer shall be VOC compliant for use in New York State. Sealer shall be of such viscosity to penetrate pores in metalized coating.

D. SUBMITTALS

The metalizing applicator shall submit the detailed procedures for surface preparation, metalizing application, and application of sealer coat, conforming to these specifications. The procedures shall detail the equipment, application process, in-process quality control, and Job Control Record to be used for the contract work. The information shall include:

1. Detailed procedures for surface preparation, thermal spraying, seal coating, and the in-process quality control checkpoints.
2. Equipment (surface preparation, thermal spraying, seal coating, and the in-process quality control) to be used and for which the detailed procedures apply.
3. Product Data and MSDS sheets for sealer.
4. Blasting media, thermal spray feedstock materials, and seal coat product.
5. Job Reference Standard.
6. Job Reference Standard test results report.
7. Job Control Record.
8. Repair of defective coatings per ANSI/AWS C2.18.
9. Certification of Class B slip coefficient and creep resistance. The certification shall include the written test results, including the thickness range required to meet the certification. Certification of Class B slip and creep resistance is not required for metalized to metalized faying surfaces meeting the requirements of this specification.

This information shall be submitted at least 10 work days prior to the schedule start of the Job Reference Standard (JRS).

CONSTRUCTION DETAILS

A. SURFACE PREPARATION

Prior to blast cleaning, steel surfaces shall be Solvent Cleaned in accordance with SSPC-SP 1, Solvent Cleaning, to remove all visible oil, grease, dirt, salt, and other contaminants. Then, all surfaces to be metalized shall be cleaned to SSPC-SP 10, Near-White Blast Cleaning, standards. All cleaning and coating shall be performed at the same facility. Surface finish and cleanliness shall be confirmed according to SSPC-VIS 1 standards. In the event of a dispute, the written SSPC SP-10 standard will take precedence.

Unacceptably hard surfaces, as defined by section 602 of the NYSDOT Steel Construction Manual, shall be removed by grinding, machining, or approved heat treating procedures, prior to abrasive blasting.

The substrate shall have an angular anchor tooth profile of 3 to 5 mils. Surface Profile measurements shall be made using X-course profile tape and a micrometer, as outlined in ASTM D4417. "Standard Test Methods for Field Measurement of Surface Profile of Blast Cleaned Steel/NACE Standard RP0287, Field Measurement of Surface Profile of Abrasive Blast Cleaned Steel Surfaces Using a Replica Tape." Spot measurements shall be made approximately every 2000 ft^2 for automated blasting or 200 ft^2 for manual blasting. Take three measurements for each spot in an area approximately 1.5 in^2. Average the measurements and record in the Job Control Record.

Compressed air shall be free of oil and water and shall meet ASTM D4285, method for Indicating Oil or Water in Compressed Air. Utilize a compressed air system capable of delivery at the nozzle of 125 cfm at 120 psi. To minimize any contamination, use an oil/water separator on the airline. 120 psi of compressed air maintains the proper atomization of the molten wire producing the optimum spray pattern.

B. SYSTEM REQUIREMENTS

Only certified spooled metalizing wire, which is properly drawn, spooled and packaged, shall be used.

The metalizing equipment shall be set up, calibrated, and operated according to the manufacturer's instructions and technical manuals or the metalizing applicator's refinement thereto and as validated by the Job Reference Standard.

Spray parameters shall be set for spraying the specified thermal spray material and, at a minimum, be validated with the bend test. A bend test shall be satisfactorily performed at the beginning of crew and shift change.

A copy of the spray parameters used shall be attached to the Job Control Record.

C. SUBSTRATE CONDITION

The steel surface temperature shall be at least 5°F above the dew-point.

For flame spraying, preheat the initial starting area to a minimum of 250°F to prevent condensation of moisture in the flame onto the substrate. Validate preheating and non-preheating requirements with a tensile bond measurement and a bend test.

Time between the completion of the final anchor-tooth blasting (or final brush blasting) and the completion of the thermal spraying shall be no greater than six hours for steel substrates. In high-humidity and damp environments, shorter holding periods shall be used. If rust bloom or a

degraded coating appears at any time within the six-hour window, the procedure outlined in Section F, Surface or Coating Degradation shall be followed.

Extension of Time of Application

In low-humidity environments or in enclosed spaces using industrial dehumidification equipment, it will be possible to retard the oxidation of the steel and hold the surface finish for more than six hours. The metalizing applicator, with the approval of the DCES, can validate a holding period greater than six hours by determining the acceptable temperature-humidity envelope for the work enclosure by spraying and analyzing bend coupons and tensile-bond coupons.

A 1-mil to 2-mil flash coat of the metalizing may be applied within six hours of completing surface preparation to extend the holding period for up to four further hours beyond the complete application of the flash coat. The final metalizing thickness, however, shall be applied within four hours of the completion of the application of the flash coat provided the metalizing can be maintained free of contamination.

Validate the use of the flash TSC holding period with a tensile-bond measurement and a bend test.

- Clean and abrasive blast a representative job area and three bend-test coupons.
- Apply a flash metalizing to the representative job area and the three bend coupons.
- Wait the delay period in representative environmental conditions and apply the final metalizing thickness.
- Perform adhesion test and bend test on coupons.
- Flash metalizing and holding period are acceptable if the tensile bond and the bend test are satisfactory.

D. METALIZING

The applied 85/15 alloy metalizing thickness shall be a minimum of 12 mils, with a tolerance of -0 and + 4 mils. For each coated component, the applied thickness shall be measured using a SSPC PA2 type 2 fixed probe gauge properly calibrated per certified coating thickness calibration standards, and measurements shall be recorded in the Job Control Report (JCR). Use a measurement line to measure the peaks and valleys of the metalizing, taking the average value of five readings along a line at 1.0 in. intervals. For complex geometries and geometric transitions, use a measurement spot approximately 1.5 square inches, and do not measure the peaks and valleys of the metalized coating. Record all measurements in the JCR. If upon inspection, and prior to sealer application, the metalizing thickness is less than the above stated requirements, the applicator shall apply additional metalizing to meet the thickness requirements.

No coating shall be applied unless the following conditions are met:

- The receiving surface shall be clean and absolutely dry.
- The surface temperature and ambient air temperature are as recommended by the coating equipment's manufacturer, except in no case shall coating work be performed when surface and ambient air temperatures are less than 40°F.

- The receiving surface temperature shall be at least 5°F above the dew point.
- The relative humidity shall not exceed 85%.

All coating applied in violation of these conditions shall be completely removed, and the affected surface cleaned and recoated in accordance with the stated requirements at no additional cost to the State.

Any staining that does occur shall be removed in a manner that does not cause damage to the seal or metalized coatings, at no cost to the State.

Surface Roughness: Surface roughness of the metalized coating shall be less than 4 mils in order to avoid unfilled valleys and low areas in the film.

E. SEALER

Sealer shall be applied and cured according to the paint manufacturer's instructions for use with metalizing, or as directed by the Engineer.

The seal coat shall be thin enough to penetrate into the body of the metalizing and seal the interconnected surface porosity. Typically the seal coat is applied at a spreading rate resulting in a theoretical 1.5 mil dry-film thickness.

Sealer shall be applied as soon as possible after thermal spraying, but shall be applied within eight hours after application of metalizing. If a sealer cannot be applied within eight hours, it shall be verified that the metalizing (a) has not been contaminated by visual inspection (10x), and (b) is dust-free (10x) using the clear cellophane tape test per ISO 8502-3 before applying the sealer.

If moisture is present or suspected in the pores of the metalizing, the steel shall be heated to 250 ºF to remove the moisture prior to seal coat application. When possible, the steel shall be heated from the reverse side of the metalizing to minimize oxidation and contamination of the metalizing prior to sealing.

During application of the seal coat, it shall be visually validated that there was complete coverage of all intended areas. Companion steel coupons positioned near the metalizing shall receive a seal coat as well. The wet and dry film thicknesses of the seal coat on these companion coupons shall be used to verify that the correct thickness of seal coat is being applied to the metalizing. Measurements shall be recorded in the JCR.

The sealer shall not be applied to faying surfaces prior to assembly. Faying surfaces of all bolted connections shall be masked prior to application of the seal coat. Touch-up field sealant shall be applied after assembly of the connection.

F. SURFACE OR COATING DEGRADATION

If rust bloom, blistering or a degraded coating appears at any time during the application of the metalizing, the following procedure applies:

1. Stop spraying.
2. Mark off the satisfactorily sprayed area.
3. Call the Thermal Spray Inspector/Foreman to observe and evaluate the error.
4. Report the deficiency to the purchaser and record the deficiency.
5. Repair the unsatisfactory area by removing the degraded metalizing, re-blast to a minimum near-white metal finish (SSPC-SP 10 standard), and returning to the specified anchor tooth profile depth.
6. Recoat the blasted area as per this specification.
7. Record the actions taken to resume the job in the JCR.

G. FIELD REPAIRS

The only field work allowed to be done under this item is touch-up work after all steel erection and all concrete placement has been completed. All areas requiring field repairs shall be clearly marked. All the requirements of this specification shall apply to field coating material with the following modifications:

1. All dirt, grease and other foreign matter shall be removed in accordance with SSPC-SP 1, Solvent Cleaning. Clean the damaged area of all loose and cracked coating by power tool to bare metal in accordance with SSPC-SP 11, Power Tool Cleaning to Bare Metal.
2. Roughen the damaged area and the surrounding 2 inches to produce a suitable anchor for the coating. All repaired areas shall be tested for proper anchor tooth profile in accordance with ASTM D4417 and as per this specification.
3. All damage to the coating system shall be corrected by the contractor in accordance with the requirements of this specification and to the satisfaction of the Engineer at no additional cost to the State.
4. The overlap of thermal spray edges shall be tested for proper adhesion at each repair location in accordance with this specification.

H. ADHESION TEST

Random adhesion testing shall be performed for each coated component, utilizing self aligning portable pull-off adhesion testing equipment, in accordance with ASTM D 4541 standards. The minimum tensile bond value shall be 700 psi.

Use adhesive recommended by the instrument manufacturer, or equivalent. Attach adhesive manufacturer's instructions to the job control record.

One portable tensile-bond measurement shall be made every 500 ft^2. If the tensile bond is less than the contract specification, additional tensile bond measurements shall be made to identify the limits or boundaries of the degraded metalizing. The degree of added testing that is necessitated by coating deficiencies will be solely determined by the State, and shall be performed at no added cost to the State. Any degraded metalizing shall be removed and reapplied as per Section F, Surface or Coating Degradation. The tensile force shall be measured

to 700 psi. The tensile force shall then be reduced and the tensile fixture removed without damaging the metalizing.

I. BEND TEST

Conduct a bend test at the beginning of each work shift or crew change:

1. Use carbon steel coupons of approximate dimensions 2 in. x 4 in. to 8 in. x 0.050 in.
2. Surface preparation according to contract specification.
3. Spray 12-mil to 15-mil thick metalizing in crossing passes, laying down approximately 3 to 4 mils for each pass.
4. Bend coupons 180° around a 0.5-in. diameter mandrel.
   a. Bend test passes if there is no cracking or only minor cracks with no spalling or lifting (by a knife blade) from the substrate.
   b. Bend test fails if the coating cracks with lifting (by a knife blade) from the substrate.

   Bend test shall be performed on coupons without sealant coats.

J. WEATHER CONSIDERATIONS:

Thermal spraying in low-temperature environments (below freezing):

Substrate shall meet the surface temperature and holding period specified in Section C, Substrate Condition. No moisture or condensation is permissible on the surface during surface preparation and thermal spraying.

Qualify metalizing period with a tensile-bond measurement and a bend test. Meet the tensile bond and metallographic requirements specified herein.

METHOD OF MEASUREMENT

This work will be measured on a lump sum basis.

BASIS OF PAYMENT

The lump sum price bid shall include the cost of furnishing all labor, materials, and equipment necessary to satisfactorily complete the work.

Note: “nn” denotes a serialized pay item.

572.00020101	Metalizing, Type 1
572.00020201	Metalizing, Type 2
572.00020301	Metalizing, Type 3
572.00020401	Metalizing, Type 4
572.00020501	Metalizing, Type 5
572.00020601	Metalizing, Type 6

ITEM 582.99000016 - EMBEDMENT OF GALVANIC ANODES IN CONCRETE

DESCRIPTION:
The work shall consist of installing galvanic anodes and testing for electrical conductivity at locations indicated on the plans or as directed by the Engineer.

MATERIALS:

A. Embedded galvanic anodes shall be compact, pre-manufactured, and consist of electrolytic High Grade Zinc in compliance with ASTM B 418 - Type 1 or Type II, cast around a pair of steel tie wires and encased in a highly alkaline cementitious shell.

The anode shall be an approved product as noted in the table below or an approved equal:

Product Name	Manufacturer	Payment Factor
Sentinel-GL[1]	Euclid Chemical Company	0.5
Galvashield XP Compact[1]	Vector Corrosion Technologies, Inc	0.5
Galvashield XP	Vector Corrosion Technologies, Inc	1.0
MasterProtect 8065CP	BASF Construction Chemicals, LLC – Building Systems	1.0
FerroGard 650	Sika Corp	1.0

1. Product requires approximately double the quantity of other products due to lower zinc content.

B. Reinforcement steel tie wire shall be W 0.3 (minimum diameter .0625 in), or heavier meeting the requirements of ASTM A 1064.

C. Electrical sealant shall be as specified by the anode manufacturer.

CONSTRUCTION DETAILS:

The type of anode shall be as specified in the contract documents.

The Contractor shall embed Galvanic Anodes in concrete where indicated in the contract documents or where directed by the Engineer.

Installation methods shall be as specified by the anode manufacturer and shall be approved by the DCES.

ITEM 582.99000016 - EMBEDMENT OF GALVANIC ANODES IN CONCRETE

METHOD OF MEASUREMENT:

This work will be measured by the actual number of galvanic anodes installed in accordance with the contract documents multiplied by the payment factor shown in the Approved List table in the Materials section above.

BASIS OF PAYMENT:

The unit price bid per galvanic anode shall include the cost of all material, equipment, and labor necessary to install, connect, test the anode, and electrically seal the splices and/or connections,. Payment for concrete removal, steel reinforcement repair/replacement, and concrete replacement will be paid for under their respective items as shown in the contract documents.

ITEM 607.41010010 - TEMPORARY PLASTIC BARRIER FENCE

DESCRIPTION

This work shall consist of furnishing, installing, and maintaining Temporary Plastic Barrier Fences of the type and at the locations shown in the plans or where directed by the Engineer.

MATERIALS

Materials for Temporary Plastic Barrier Fences shall meet the following requirements:

- **Fence**: High-density polyethylene mesh, ultraviolet-stabilized min. 2 years; minimum height 4.0 feet. Color: high-visibility orange or green. When used to protect trees or other vegetation, color shall be high-visibility orange.
- **Posts**: Rigid metal or wood posts, minimum length 6.0 feet.
- **Ties:** Steel wire, #14 gauge or nylon cable ties.
- **Warning signs**: Sheet metal, plastic or other rigid, waterproof material, 1.5 feet by 2.0 feet with 4 inch black letters on a white background. Text shall be: "Protected Site - Keep Out" unless otherwise specified.

CONSTRUCTION DETAILS

Fences shall be erected prior to moving construction equipment onto any area designated for protection.

The line of fences as indicated on the plans shall be staked or marked out on the ground by the Contractor and approved by the Engineer before any fence is installed. Where used for protection of individual trees, fence shall be placed at the drip line (extent of canopy). If not possible, placement shall be as close to the drip line as possible and in no case less than 5.0 feet away from the tree trunk.

On approval of the stakeout, posts shall be securely driven on 6.0 foot-maximum centers, normal to the ground, to a depth 1/3 of the total post length. Plastic barrier fence shall be placed along the side of all posts. Ends of fencing segments shall overlap a distance of at least one half the fence height.

Fencing shall be secured to posts with wire or cable ties at top, middle and bottom of post. Fastener shall be tight enough to prevent the fencing from slipping down. Overlaps shall also be securely fastened.

Barrier fence which is not orange in color shall be flagged at 6.0 foot intervals with red or orange florescent tape. Warning signs shall be mounted on the fence at no more than 100 foot intervals.

Maintenance shall commence immediately after erection of the fence and continue until one week prior to acceptance of the contract, and shall consist of: replacing damaged post(s) and fencing; re-fastening and tightening fencing; and restoring fence to its intended height.

Fencing used for tree or other vegetation protection shall not be temporarily removed to allow equipment access over a protected area, except as required for items of work specifically shown on the plans and approved by the Engineer in writing.

ITEM 607.41010010 - TEMPORARY PLASTIC BARRIER FENCE

METHOD OF MEASUREMENT

The quantity to be measured for payment will be the number of feet of Temporary Plastic Barrier Fence erected, measured along the top, to the nearest whole foot.

BASIS OF PAYMENT

The unit price bid shall include the cost of all labor, materials and equipment necessary to satisfactorily complete the work. Relocation of a fence from one location to another as directed by the Engineer shall be considered as a new location and will be separately paid.

Seventy percent (70%) of the price bid will be paid after satisfactory installation of the fence. The remaining Thirty percent (30%) will be paid after complete removal of the fence.

ITEM 611.19010024 - POST-PLANTING CARE WITH REPLACEMENT - MAJOR DECIDUOUS TREES
ITEM 611.19020024 - POST-PLANTING CARE WITH REPLACEMENT - MINOR DECIDUOUS TREES
ITEM 611.19030024 - POST-PLANTING CARE WITH REPLACEMENT - CONIFEROUS TREES
ITEM 611.19040024 - POST-PLANTING CARE WITH REPLACEMENT - DECIDUOUS SHRUBS
ITEM 611.19050024 - POST-PLANTING CARE WITH REPLACEMENT - EVERGREEN SHRUBS
ITEM 611.19060024 - POST-PLANTING CARE WITH REPLACEMENT– VINES, GROUNDCOVERS
ITEM 611.19070024 - POST-PLANTING CARE WITH REPLACEMENT - HERBACEOUS PLANTS

DESCRIPTION

This work consists of the care of newly planted and transplanted trees, shrubs, vines, groundcovers and other plants and replacement of plants in kind and as necessary, in accordance with the contract documents and as directed by the Engineer.

MATERIALS

Materials shall meet the requirements of the following subsections of Section 700 *Materials and Manufacturing*.

Water	712-01
Topsoil	713-01
Mulch for Landscape Bedding	713-05
Trees, Shrubs and Vines	713-06
Materials for the Protection of Plants	713-08
Pesticides	
713-13	

CONSTRUCTION

Post-Planting Care. The Contractor shall perform all work as specified under Standard Specification section **611-3.05 Post-Planting Care.**

Replacement Planting. Plants that die, become diseased or badly impaired during Post-Planting Care shall be removed and replaced in kind once with new, healthy plant material, in the same location as the initial planting. Replacement planting shall occur within the planting seasons shown in Standard Specification **Table 611-1**. For any plants replaced during the Post-Planting Care period, Post-Planting Care shall continue to the end of the period.

Replacement plants shall be planted, maintained and accepted per Standard Specification **Section 611-3.01.** Planting soil used in the initial planting shall be reused for replacement plants and shall be supplemented with topsoil at no additional cost if additional material is needed to meet grade and surface finish. Watering shall accompany backfilling, at no additional cost. No replacement tree shall be staked, guyed or anchored.

ITEM 611.19010024 - POST-PLANTING CARE WITH REPLACEMENT - MAJOR DECIDUOUS TREES
ITEM 611.19020024 - POST-PLANTING CARE WITH REPLACEMENT - MINOR DECIDUOUS TREES
ITEM 611.19030024 - POST-PLANTING CARE WITH REPLACEMENT - CONIFEROUS TREES
ITEM 611.19040024 - POST-PLANTING CARE WITH REPLACEMENT - DECIDUOUS SHRUBS
ITEM 611.19050024 - POST-PLANTING CARE WITH REPLACEMENT - EVERGREEN SHRUBS
ITEM 611.19060024 - POST-PLANTING CARE WITH REPLACEMENT– VINES, GROUNDCOVERS
ITEM 611.19070024 - POST-PLANTING CARE WITH REPLACEMENT - HERBACEOUS PLANTS

METHOD OF MEASUREMENT.

The quantity to be measured for payment will be the number of plants of each type cared for and, if necessary, replaced in kind.

BASIS OF PAYMENT.

The unit price bid shall include the cost of all labor, materials, and equipment necessary to satisfactorily complete the work.

Payment will be made under:

Item No.	Item	Pay Unit
611.19010024	Post Planting Care with Replacement - Major Deciduous Trees	Each
611.19020024	Post Planting Care with Replacement - Minor Deciduous Trees	Each
611.19030024	Post Planting Care with Replacement - Coniferous Trees	Each
611.19040024	Post Planting Care with Replacement - Deciduous Shrubs	Each
611.19050024	Post Planting Care with Replacement - Evergreen Shrubs	Each
611.19060024	Post Planting Care with Replacement– Vines, Groundcovers	Each
611.19070024	Post Planting Care with Replacement - Herbaceous Plants	Each

ITEM 613.70XX0011 - BIRD REPELLENT SYSTEM

DESCRIPTION

This work shall consist of furnishing and installing a bird repellent system(s), at the locations indicated in the contract documents, in accordance with the contract documents, and as directed by the Engineer. The purpose of the bird repellent system(s) is to prevent nesting by birds on horizontal and sloped surfaces underneath bridge superstructures.

MATERIALS

The following reference shall apply:

Standard Specification for Sintered Ferrite Permanent Magnets	ASTM 1054
Standard Specification for Sintered and Fully Dense Neodymium Iron Boron (NdFeB) Permanent Magnets	ASTM 1101

- Magnets can be of either type unless limited to one type by the contract documents
- Magnets shall have a minimum magnetic pull force of 25 pounds vertically per 1 square inch of magnet when in flush contact with a mild steel surface
- Neodymium Iron Boron (NdFeB) permanent magnets must have a Nickel-Copper-Nickel coating

Bird repellent spike, coil, slide or netting systems, shall be from the following manufacturers:

Bird Repellent System, Spike:

Bird-Flite
as manufactured by
Bird Barrier America Inc.,
20925 Chico Street
Carson, CA 90746
310-527-8000
https://birdbarrier.com

Spikes System
as manufactured by
BIRD-X Inc.,
300 N Oakley Blvd
Chicago, IL 60612
1-800-662-5021
www.bird-x.com

Bird Repellent System, Coil:

Bird Coil
as manufactured by
Bird Barrier America, Inc.
20925 Chico Street
Carson, CA 90746
310-527-8000
https://birdbarrier.com

Bird Coil Bird Repellent
as manufactured by
Bird Busters
707 South Gulfstream Avenue #405
Sarasota, FL 34236
866-915-8225
www.birdbusters.com/

Bird Repellent System, Slide :

BirdSlide
as manufactured by
Bird Barrier America Inc.
20925 Chico Street
Carson, CA 90746
370-527-8000
https://birdbarrier.com

AviAngle
as manufactured by
BIRD-X Inc.
300 N Oakley Blvd.
Chicago, IL 60612
1-800-662-5021
www.bird-x.com

Bird Slope
as manufactured by
Bird B Gone Inc.
1921 E Edinger Ave.
Santa Ana, CA 92705
https://www.birdbgone.com/

ITEM 613.70XX0011 - BIRD REPELLENT SYSTEM

Bird Repellent System, Netting:

StealthNet System as manufactured by Bird Barrier America Inc. 20925 Chico Street Carson, CA 90746 310-527-8000 https://birdbarrier.com	Bird Netting as manufactured by BIRD-X, Inc. 300 N Oakley Blvd. Chicago, IL 60612 1-800-662-5021 www.bird-x.com

or equal as approved by the Engineer

CONSTRUCTION DETAILS

Bird Repellent System(s) shall be installed according to the contract documents and manufacturer's recommendations.

Bird repellent System, Spike; Coil; and Slide-Fixed shall be installed in strips and attached to structural steel, concrete and other surfaces through either:

1) The use of adhesive compounds recommended by the manufacturer of the approved system. Recommendations regarding the adhesive compounds' drying time, if any, shall be strictly followed. The adhesive compound shall be applied in accordance with the manufacturer's specifications.

2) When approved by EIC, the use of screws provided by the manufacturer of the approved system. The contractor shall not drill holes in any structural steel or concrete without written permission.

Bird Repellent System, Slide - Repositionable Magnet shall be installed in strips attached to structural steel through the use of magnets. Installation shall meet the following criteria:

- Removable and repositionable without damage to the slide
- Slides are secured at the base and top with magnets
- Magnets spaced a maximum of every 2' horizontally or as specified
- Including a method of securing one slide section to an adjacent section
- Manufacturer to supply instructions for installation and removal

Bird Repellent System, Netting shall be installed to provide complete enclosure of the undersides of bridge superstructures, where shown on the contract documents. Attachment shall be with screws, clips and cables supplied by the manufacturer or, where drilling is not possible, with Velcro, caulk, or other means as recommended by the manufacturer. Care shall be taken to ensure that all required surfaces are covered.

METHOD OF MEASUREMENT

This work will be measured:

- As the number of **linear feet** of Bird Repellent Systems, Spike; Coil; and Slides-Fixed; or Slides – Repositionable Magnets) installed, OR
- As the number of **square feet** of Bird Repellent System, Netting installed.

BASIS OF PAYMENT

The unit price bid per linear foot or square foot of bird repellent system, shall include the cost of furnishing all labor, materials, and equipment necessary to satisfactorily complete the work.

Payment will be made under:

Pay Item	Description	Unit
613.70010011	Bird Repellent System, Spikes - Single Row	LF
613.70020011	Bird Repellent System, Spikes - Double Row	LF
613.70030011	Bird Repellent System, Spikes - Triple Row	LF

ITEM 613.70XX0011 - BIRD REPELLENT SYSTEM

613.70040011	Bird Repellent System, Spikes - Triple Row Extra Wide	LF
613.70050011	Bird Repellent System, Coils	LF
613.70060011	Bird Repellent System, Netting	SF
613.70070011	Bird Repellent System, Slides – Fixed	LF
613.70080011	Bird Repellent System, Slides - Repositionable Magnet	LF

ITEM 634.99010017 – BUILDING CONDITION SURVEY
ITEM 634.99020017 – VIBRATION MONITORING (NONBLASTING)

DESCRIPTION

A. Building Condition Survey. This work shall consist of performing a building condition survey(s) and preparing permanent records as indicated in the contract documents prior to the commencement of work, after completion of work, and at locations and times during construction as directed by the Engineer.

B. Vibration Monitoring (Nonblasting). This work shall consist of performing vibration monitoring of background and construction activities and preparing daily and summary report(s) of vibration readings.

MATERIALS

A. Building Condition Survey. Provide general photography and video equipment, analog or digital, capable of superimposing the date and time on all images.

B. Vibration Monitoring (Nonblasting). Provide a 3-component seismograph, capable of measuring particle velocity data in three mutually perpendicular directions. Annual factory calibration is required throughout the duration of the work.

CONSTRUCTION DETAILS

A. General. The Contractor shall engage the services of a firm capable of furnishing a New York State licensed Professional Engineer to conduct a condition survey of the existing building(s) indicated in the contract documents in the Special Note entitled Vibration Criteria and an experienced vibration monitoring Consultant to measure peak particle velocities prior to, and during, construction operations. Submit as proof to the Deputy Chief Engineer Technical Services (DCETS) the experience and qualifications of the firm's personnel conducting the work.

B. Building Condition Survey. Provide, as a minimum, the following information:

1. Photographic and videotape documentation of the interior and exterior condition of the building(s).

2. Extent and location of existing signs of building distress such as cracks, spalling, signs of settlement, flooding, leaking, etc.

The Engineer may accompany the Contractor on each building condition survey for verification of the data recorded. Provide two copies of all documentation of each building condition survey to the Engineer.

C. Vibration Monitoring (Nonblasting). The DCETS may waive the requirements of vibration monitoring based on the results of the building condition survey.

Perform continuous vibration monitoring during construction operations when adjacent construction activities make monitoring prudent. The Contractor shall perform contract work in

a manner that will limit construction vibration at the specified locations to within the limits set within the contract documents.

1. Submittal of Written Vibration Monitoring Plan. Prior to performing work adjacent to specified locations, a written Vibration Monitoring Plan prepared by the Contractor shall be submitted to the Engineer a minimum of 10 work days in advance for approval. The Engineer will send a copy of the Vibration Monitoring Plan to the Geotechnical Engineering Bureau, Engineering Geology Section, for review and written comment. The vibration monitoring plan may be returned to the Contractor for revision or clarification.

The vibration monitoring plan shall include the necessary information to outline the recording collection. The vibration monitoring plan shall include, but not be limited to, the following items:

a. Contract Designations

- The name of vibration monitoring specialist(s).
- The scheduled start date and length of construction operations which require vibration monitoring.
- The limits of vibration monitoring work, including sites on or off State-owned right-of-way.
- The location of all structures to be monitored in proximity to the construction operation.
- The location of any underground utilities in proximity to the construction operation.

b. Experience and Equipment

- Submit proof and details, as references, of two projects in the past five years where the vibration monitoring consultant performing the work has satisfactorily monitored construction operations by recording maximum peak particle velocities (PPVs). Include contact information for each reference.
- Submit information on the required 3-component seismograph, capable of measuring particle velocity data in three mutually perpendicular directions, including: the manufacturer's name, model number, and documentation of factory calibration performed within the last 12 months.

c. Methods and Procedures

- The location of adjacent structures to be monitored and maximum allowable PPVs as indicated in the contract documents. If not otherwise specified, a maximum allowable PPV in accordance with the United States Bureau of Mines (USBM) Vibration Criteria (Figure 1) shall be observed at all structures.
- The location of seismograph(s) placements, as directed by the Contractor's Professional Engineer. Recording seismographs may be installed on selected structures.
- Appropriate details for anchoring the geophone(s).

- The procedure for tracking PPV throughout construction operations (e.g., Pile Driving Operations: pile tip vs. vibrations may be correlated through time of day. A record of the time of day at each depth interval, included on the pile driving records, would be required to correlate to a time-based readout of PPV).

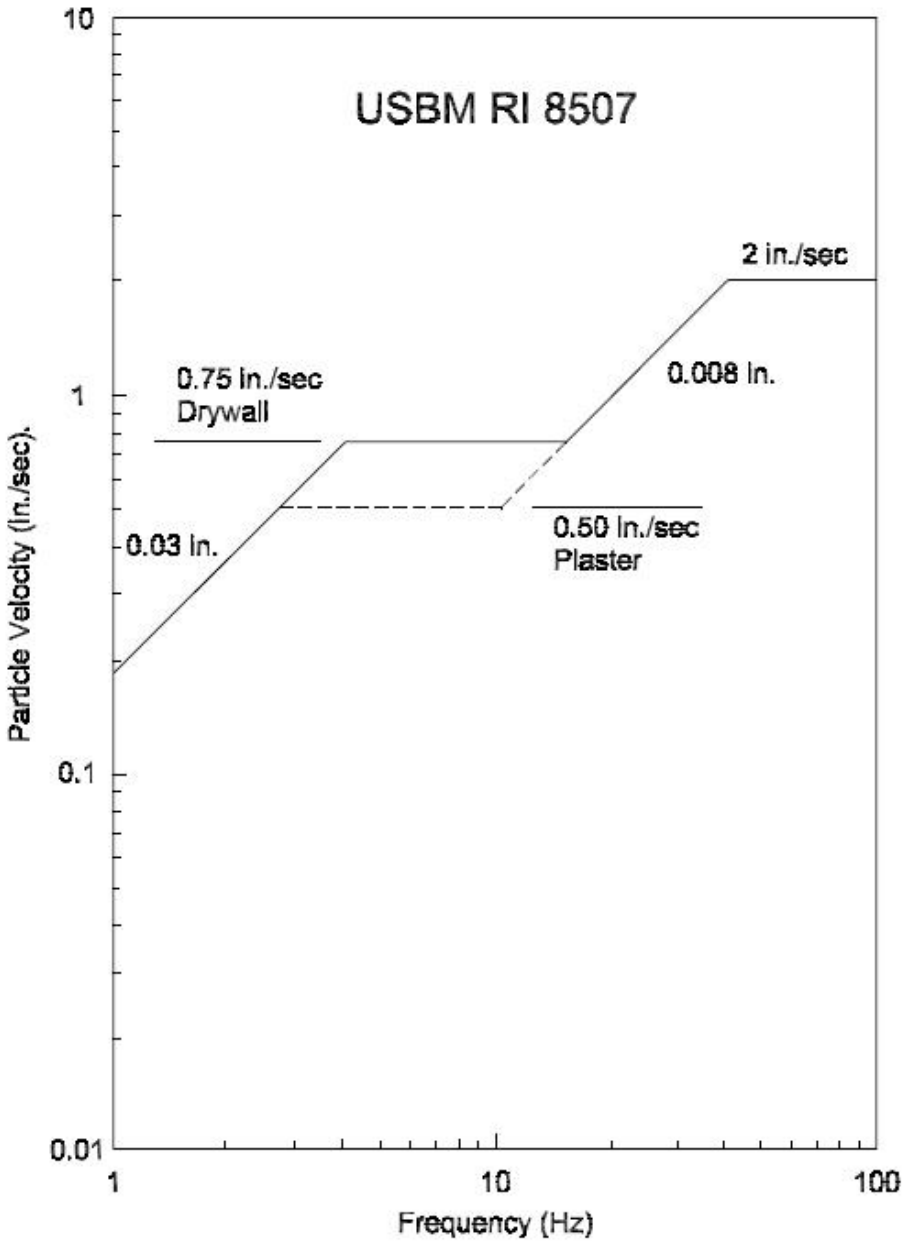

Figure 1—Safe Vibration Limit Recommendations for Residential Structures

Figure 1 – USBM Vibration Criteria (after Siskind et al, 1980)
The figure provides a "threshold damage" limit, defined as cosmetic damage (e.g., cracking) within the structure, categorized by both frequency ranges and particle velocity

2. Measuring Vibrations. The Contractor shall inform the Engineer immediately each time measured particle velocities exceed 85% of the allowable peak particle velocity. The Contractor shall make equipment or procedural modifications as required to avoid exceeding the allowable vibration intensity.

If the measured velocities exceed the maximum allowable PPVs, the Contractor shall stop operations immediately and revise equipment and procedures to reduce vibrations to allowable levels.

The Contractor shall be in communication with his monitoring firm's personnel during vibration monitoring at all locations to verify the data recorded.

The Contractor shall provide the Engineer with the results of daily vibration monitoring, one work day after the readings are taken. Upon completion of the construction operations for those locations requiring vibration monitoring, the daily submittals shall be synthesized into a final report.

If the seismographs show any indication of damage or vandalism, the seismographs shall be immediately recalibrated or replaced.

METHOD OF MEASUREMENT

A. Building Condition Survey. This work will be measured on a lump sum basis.

B. Vibration Monitoring (Nonblasting). This work will be measured on a lump sum basis.

BASIS OF PAYMENT

The unit price bid for building condition survey(s) and vibration monitoring shall include the cost of furnishing all labor, materials, and equipment necessary to satisfactorily complete the work.

Vibration Monitoring (Nonblasting). Progress payments will be made for this item paid proportionally in accordance with the amount of work completed, measured on a workday basis.

Payment will be made under:

Item No.	Item	Pay Unit
634.99010017	Building Condition Survey	Lump Sum
634.99020017	Vibration Monitoring (Nonblasting)	Lump Sum

ITEM 637.4000nn20 - WEBCAM SYSTEM

DESCRIPTION

This work shall consist of providing, installing, maintaining and removing a webcam system, with a camera mounted on wood utility pole. A single website for image storage and online access may be used for multiple cameras, provided the images are organized and available for each camera separately.

MATERIALS

The webcam system shall meet the following material requirements:

Camera

- The high definition camera and lens assembly shall take high resolution (minimum 16 megapixel - 4928 x 3264) digital still color images and have digital pan, tilt, and zoom capabilities
- Imager: 23.6 X 15.6 CMOS.
- Auto Features: Focus, Shutter, ISO, and white balance.
- Powered by 120 VAC electrical supply, GFCI protected (provided, installed, maintained and removed by Contractor).

Camera Enclosure

- The camera enclosure shall be UL compliant and shall meet NEMA Type 3R standards.
- Include provisions for a fixed installation to a pole or wall.
- Shall include a thermal insulation package, heater, blower, window defroster kit, sun shroud and shall operate within a minimum temperature range of -10°F to 110°F.
- Powered by 120 VAC electrical supply, GFCI protected (provided, installed, maintained and removed by Contractor).

Interface and Online Access

- The system must provide wireless cellular modem as an option for uploading the digital still images.
- The online interface system shall allow viewing of all high-definition digital still images captured and stored during the duration of the contract over the internet with password-protection.
- The still images shall be in a non-proprietary format that can be freely viewed with most image viewing software (.bmp, .jpeg, .tif or .gif)
- Navigation: Calendar based navigation system for selecting specific images on specific days.
- Capable of viewing actual live video.
- HD Snapshot on Demand: HDR (High Dynamic Range) Imaging and Additional Special Effects Including Architectural Miniature, Artistic Color Sketch and Cinematic Black & White
- Graphical mark-up tools for detailing and creating overlays on images.
- Graphical weather applet displaying ten points of local weather data and 48-hour forecast.
- Remote cellular monitoring screen displaying connectivity, network traffic and modem temperature.
- Remote wireless radio monitoring screen displaying connectivity, network traffic and Google Map features including wireless radio locations.
- Image Comparison: Capability to choose and overlay images from two different dates in the same viewing window
- Zoom: Pan and zoom capability for zooming into the high definition images.
- Remote Solar Monitoring Screen Displaying the DC Amperage Output of Solar Panels.
- Fullscreen: Screen maximizing the view of the images on the users monitor.
- Slideshow: Capability to browse through images, moving forward and backward in time by individual image and by day.
- Picture in Picture to view live video, while viewing high definition images.

- All Images are the Copyright of the Department and Protected on Secure Servers Owned and Operated by the System Vendor.

Embedded Wood Utility Pole

- The pole shall me a minimum 60 feet in length, Southern pine and meet the requirements of ANSI #05.01 for Class 4 utility type poles.
- The pole shall be given a water borne preservative treatment in accordance with §708-31.

CONSTRUCTION DETAILS

The Contractor shall provide, install and maintain a fully functional webcam system including an electrical power supply, camera hardware, mounting pole and equipment, data connections, image storage, online interface for the system and technical support. The Contractor is required to have the webcam system's vendor made available for support services and equipment maintenance/repairs.

The Contractor shall provide, install, maintain and remove the webcam system. The Contractor shall coordinate with the Engineer to install the camera in an approved location and provide password access to the webcam system's Internet site. The camera shall be installed so that the position of the sun or any man-made light source does not point directly into the camera. The camera shall be tested at the site both prior to and subsequent to installation, including having the webcam system's vendor remotely confirm both successful tests. The Contractor shall clean the installed components in accordance with manufacturer's recommendations at least monthly, or as needed to ensure image clarity.

The pole shall be installed plumb, in a hole of sufficient depth to allow for a minimum of 10 feet embedment. The area around the pole shall be backfilled with suitable material and thoroughly compacted. The Contractor shall restore, in kind, all areas which were disturbed by the pole installation operation.

The webcam system shall consist of all-weather, tamper/impact resistant, fixed mounted camera enclosure with integrated, fixed high definition camera. The camera shall have the ability to take a high-resolution digital still color image of the construction site at a set time interval, as least every fifteen (15) minutes, and securely upload the still images to a secure, password-protected website. The image data shall at all times be the property of the State. The digital still images shall be stored on a remote server (with sufficient storage capacity to store all images taken on the contract) and be made available for viewing on the website in chronological order. The website shall provide the ability to zoom in on the images. Password access to the website shall be granted to those parties specified by the Engineer (Department staff and the Contractor, at a minimum). The Contractor shall provide the Department with an archive in DVD or external hard drive format of all the digital still images in a sortable/identifiable format. The still image file names shall include the date and time taken.

The Contractor shall maintain all equipment in working condition and shall provide replacement due to breakdown, damage, or theft within two (2) work days. The Contractor's webcam system vendor shall proactively monitor the webcam system and if no system connection is made within normal working hours, not to exceed 24 hours, the vendor shall notify the Contractor and begin troubleshooting.

The Contractor shall remove all webcam system equipment and wood utility pole within ten (10) work days after the Engineer requests the removal in writing. The webcam system equipment and pole shall remain the property of the Contractor. The State shall retain ownership of all data collected by the webcam system.

The webcam system shall be operated in accordance with the "Policy for the Operation of Webcam Systems on Construction Contracts", a copy of which will be provided to the Contractor by the Engineer.

ITEM 637.4000nn20 - WEBCAM SYSTEM

METHOD OF MEASUREMENT

The webcam system will be measured for payment on a monthly basis, measured to the nearest 0.25 months.

BASIS OF PAYMENT

The unit price bid per month for the webcam system shall include the cost of all labor, materials and equipment, including services to provide, install, maintain and remove all components of the webcam system and wood utility pole. A deduction of 1/30 of a month will be made for each 24-hour period, or portion thereof during which the webcam system is not operational. Payment will begin the first month the webcam system is installed, operational and made available for use, including having the website established and functional. Monthly payments will be terminated no later than two (2) weeks after written notification by the Engineer that the webcam system will no longer be required.

ITEM 643.99010004 - PRECAST CONCRETE NOISE BARRIER SYSTEM

DESCRIPTION

This work shall consist of furnishing and erecting a precast concrete noise barrier wall at the locations and to the elevations shown in the contract documents and as directed by the Engineer.

MATERIALS

The following sections of the standard specifications shall apply:

Portland Cement Concrete– General	501-2
Structural Concrete	555-2
Reinforcing Steel for Concrete Structures	556-2
Precast Concrete – General	704-03
Caulking Compound for Structures	705-06
Preformed, Closed-Cell Foam Material	705-08
Structural Steel	715-01
Galvanized Coatings and Repair Methods	719-01
Anchor Bolts	723-60
Rubber Impregnated Woven Cotton-Polyester Fabric	728-01
Rubber Impregnated Random Fiber Pad	728-02

and the following ASTM reference shall apply:

Standard Specification for Carbon and Alloy Steel Nuts for Bolts for High Pressure or High Temperature Service or Both	A194
Standard Specifications for Structural Bolts, Steel, Heat Treated, 120/105 ksi Minimum Tensile Strength	A325
Standard Specification for Carbon and Alloy Steel Nuts	A563
Standard Specification for Concrete Aggregates	C33
Standard Specification for Backer Material for Use with Cold- and Hot-Applied Joint Sealants in Portland Cement Concrete and Asphalt Joints	D5249
Standard Practice for Determination of the Effectiveness of Anti-Graffiti Coating for Use on Concrete, Masonry and Natural Stone Surfaces by Pressure Washing	D7089
Standard Specification for Hardened Steel Washers	F436

and the following standards shall apply:

NYSDOT LRFD Bridge Design Specification	NYSDOT LRFD

with the following modifications and additions:

A. Precast Concrete: The concrete for precast panels, posts and caps shall have a minimum compressive strength of 5000 psi at 28 days.

ITEM 643.99010004 - PRECAST CONCRETE NOISE BARRIER SYSTEM

B. Cast In Place Concrete: The concrete for cast in place piers and footings shall be Class A meeting the requirements of §501 Portland Cement Concrete - General.

C. Reinforcing Steel: Reinforcing steel used in precast concrete panels, caps and posts shall be epoxy coated.

D. Coarse Aggregate: The coarse aggregate, used in precast components with an exposed aggregate finish, shall be screened gravel with a No. 1 size designation. A coarse aggregate gradation meeting the requirements of ASTM C 33, size No. 67 may be used as an alternate to size No. 1. The screened gravel shall be the color indicated in the contract documents. Samples, (1-gallon each) shall be submitted for approval prior to the start of production.

E. Misc. Materials:

Post base plate	§715-01
Caulking compound	§705-06
Backer rod	polyethylene conforming to ASTM D5249 Type I
Neoprene pads	§728-01 or §728-02
Anchor bolts	§723-60; galvanization §719-01, Type II
Bolts	ASTM A325, Type1; galvanization §719-01, Type II
Nuts	ASTM A563, Grade DH or ASTM A194, Grade 2H and be galvanized in accordance with §719-01, Type II
Washers	ASTM F436 and be galvanization§719-01, Type II
Miscellaneous steel connection hardware	galvanization §719-01, Type II
Closed cell foam gasket	§705-08

F. Anti- Graffiti Coating: Exposed concrete surfaces shall receive an anti-graffiti coating. The anti-graffiti coating shall be

- one component,
- clear-drying,
- non-sacrificial (permanent),
- tested according to ASTM D7089 and capable of achieving a rating of “Cleanability Level 1” after cleaning,
- applied at the precast manufacturer, no anti-graffiti coating shall be field applied, and
- applied according to manufacturer’s instructions.

ITEM 643.99010004 - PRECAST CONCRETE NOISE BARRIER SYSTEM

SI-Coat 531
as manufactured by
CSL Silicones Inc
144 Woodlawn Road West
Guelph, ON N1H 1B5
Canada
1.800.265.2753
www.cslsilicones.com

Blok-Guard & Graffiti Control II
as manufactured by
PROSOCO
3741 Greenway Circle
Lawrence, KS 66046
1.800.255.4255
1.800.255.4255
www.prosoco.com

Permashield Non-Sacrificial #5300/5400
as manufactured by
Monopole, Inc
4661 Alger Street
Los Angeles, CA 90039
1.818.500.8585
www.monopoleinc.com
Or equal as approved by the Engineer.

Refer to the contract documents for foundation diameter and depth for each post for the noise barrier system.

FABRICATION:
The fabrication, curing, and repair requirements for precast components shall meet the requirements of §704-03. Precast Concrete - General, with the following modifications and additions:

A. **Fabrication:** Panels shall be full height with no horizontal joints.

   The concrete posts and caps shall have a smooth finish, unless specified otherwise in the contract documents. Panel finish shall be as shown in the contract documents. If an exposed aggregate finish is specified, the panels shall have completely covered, uniform surface of exposed aggregate. The depth of exposure shall be 30% of the primary size dimension of the coarse aggregate exposed.

   If a form liner finish is specified, the form liner style shall be as shown in the contract documents. The number of uses per form liner shall not exceed the manufacturer's recommendations. Architectural treatments shall meet the requirements of §704-03.

B. **Repair:** The procedure for repairing damaged areas in the precast concrete, including exposed aggregate or form liner finish shall follow the requirements listed in §704-03 Repair.

ITEM 643.99010004 - PRECAST CONCRETE NOISE BARRIER SYSTEM

CONSTRUCTION DETAILS

The following sections of the standard specifications shall apply:

Trench, Culvert and Structure Excavation	206-3
Structural Concrete	555-3
Cement Mortar Pads	568-3.02

DESIGN AND SHOP DRAWINGS:

The Contractor shall design the precast concrete noise barrier system and components in accordance with these specifications, the contract documents and in conformance with the NYSDOT LRFD Bridge Design Specification, latest edition. The design shall be submitted as shop drawings to the Materials Bureau in accordance with the requirements for Drawing in §704-03 – *Precast Concrete - General*.

Shop drawings shall be submitted for review and approval before beginning any work related to the precast concrete noise barrier system. No components of the precast concrete noise barrier system shall be fabricated until design calculations and shop drawings have been approved.

The shop drawings shall include:

- noise barrier system design
- design calculations,
- all relevant aspects of the precast concrete installation,
- connections including the posts to the footing and the panels to the posts. The panel to post connection shall be designed to be as inconspicuous as possible.
- sizes of all bolts, nuts, washers, plates, and shapes to be used along with the applicable material specifications.

The shop drawings and design calculations shall be stamped by a professional engineer who is licensed and registered in the State of New York.

INSTALLATION

Holes for post shafts shall be pre-bored, true and plumb, to the depth and diameter shown in the contract documents. Precautions shall be taken to protect the holes from collapse. Holes shall contain no free water at the time of concrete placement. Holes shall then be filled with Class A concrete in direct contact with soil, properly consolidated to the point shown on the Plans as top of shaft elevation.

The Contractor shall lift, place, and secure precast concrete wall units in accordance with manufacturer's instructions and approved shop drawings. Follow erection procedures and sequences of erection as recommended by precast concrete wall manufacturer. When overhead utilities are present above the proposed noise barrier, placement methods must be approved by the Engineer. Consideration shall be given to a method different than placement from above.

After the posts are set in their final, truly vertical position, the space between the base plate and top of foundation shall be filled with grout meeting the requirements of §701-05. The requirements of §568-3.02 shall apply.

ITEM 643.99010004 - PRECAST CONCRETE NOISE BARRIER SYSTEM

Posts shall be true and plumb within ½" of the total height. Top of posts and panel shall be within ½" of the elevations noted in the contract documents. The Contractor shall perform any required grading between the posts to provide a continuous and smooth ground line which will meet the tolerances shown on the drawings for the distance between the bottom of the panel and the ground surface.

BASIS OF ACCEPTANCE:
The sampling and testing, marking, final product inspection, shipping and basis of acceptance requirements for precast components shall meet the requirements of §704-03 Precast Concrete - General.

METHOD OF MEASUREMENT
The work will be measured as the number of square feet of precast concrete noise barrier system furnished and erected.

The Noise Barrier System will be measured as the total number of square feet of the noise barrier measured from the top of noise barrier to the bottom of the wall panels and from center to center of posts as shown on the plans.

Only one side of the proposed wall will be measured for payment. No additional payment will be made for the canted panels or for the portion of post caps (all types) that extend above the top of the wall elevation.

BASIS OF PAYMENT
The unit bid price per square foot of precast concrete noise barrier system furnished and erected shall include the cost of furnishing all labor, materials, and equipment necessary to satisfactorily perform the work. Work includes, excavation, concrete foundation, reinforcement, backfill, hardware (anchor bolts, nuts, washers, etc.), formliner treatment, final grading along the noise wall, anti-graffiti coating, and design.

ITEM 662.6000NN15 - FURNISHING ELECTRICAL SERVICE

Description. Under this item, the Contractor shall reimburse the Utility,

_____ ,
(Name Of Utility)

for work performed and material installed by the Utility, as specified in the Contract Documents or as ordered by the Engineer to provide electrical service at the location indicated in the Contract Documents.

Materials. All materials will be furnished by the Utility.

Construction Details. The Contractor shall notify the Utility when the contract site is ready for the Utility work, shall insure that the site is readily and safely accessible to the Utility's workers and equipment, and shall conduct his operations in such a manner as to allow the Utility's forces to perform their work efficiently.

All labor and equipment necessary to accomplish the work shall be furnished, installed and supervised by the Utility except that if there is a survey and stakeout item in the Contract, the Contractor shall perform any stakeout of the location to which electrical service is to be supplied before the Utility starts work.

Method of Measurement. This item will be measured for payment on a lump sum basis for work completed in accordance with this Specification, the Contract Documents, and as directed by the Engineer.

Basis of Payment. The amount set forth in the Proposal is a fixed price for all bidders. Any bid,- other than the specified amount shown on the itemized proposal, will be adjusted to reflect the fixed price and the Contractor shall be entitled to payment for this item strictly in accordance with this paragraph. The actual payment for the item will be based upon the billing submitted by the Utility -for work performed, with such billing being subject to approval by the Department. At such time as the Engineer In Charge indicates to the Contractor that the Department approves any billing submitted by the Utility, he shall direct the Contractor to pay the Utility the approved amount. After proof of payment to the Utility is received by the Engineer In Charge, the Contractor thereafter shall be entitled to the amount paid to the Utility plus 5% for the Contractor's preparatory and processing costs associated with this item. The lump sum price, as adjusted to reflect actual payments to the Utility, is intended to be reimbursement of the Utility for the necessary furnishing of electrical service, with the additional 5% being paid to the Contractor for his costs.

Payment for any necessary stakeout work shall be included in the Survey and Stakeout Item.

10/10/80
M 11/16/94

ITEM 680.05010007 – 360 DEGREE CAMERA VIDEO DETECTION SYSTEM
ITEM 680.05020007 – 360 DEGREE CAMERA ASSEMBLY

DESCRIPTION

Under this item the Contractor shall install a complete system or camera assembly that detects vehicles on a roadway via processing of video images from a 360º view camera(s) and provides detector outputs to State standard traffic signal cabinet to interface with State qualified traffic signal controller for the application shown on the contract documents. Contractor shall also be responsible for the providing and installing auxiliary equipment to assure system functionality per the manufacturer's recommendations. The contract documents will state if any of the materials will be supplied by the state. Materials not supplied by the state shall be supplied by the contractor. If no materials list is provided in the contract documents, the Contractor shall furnish and install the complete system shown on the contract documents. The Contractor shall use products off the New York State DOT Approved Products List (APL).

MATERIALS

1.0 GENERAL

1.1 System Hardware

The 360 Degree Camera Video Detection System shall consist of one fixed 360º view video camera where shown on the contract documents, control unit, mounting hardware and all necessary cables.

The 360 Degree Camera Assembly shall consist of one fixed 360º view video camera, mounting hardware and all necessary cables (no control unit). This item may be used at locations where a second video camera is necessary in addition to the 360 Degree Camera Video Detection System or when a replacement camera is necessary.

1.2 System Software

The system shall include either client software for local and remote access of the detection system, or web server for local and remote access of the detection system. This access is for the configuration and monitoring of system parameters. The system shall also send alarm/health emails when enabled.

The system shall detect vehicles, bicycles, and pedestrians in multiple traffic lanes using only the video image. A minimum of 64 detection zones shall be user-definable through interactive graphics by placing lines and/or boxes in an image on a computer monitor. The user shall be able to redefine previously defined detection zones. The system shall calculate traffic parameters in real-time.

2.0 FUNCTIONAL CAPABILITIES

2.1 Real-Time Vehicle Detection

2.1.1 The system shall be capable of simultaneously processing information from the video cameras.

2.1.2 Detection zones shall be programmed via a graphical user interface on a desktop or laptop computer and pointing device. The interface shall facilitate placement of detection zones and setting of zone parameters or to view system parameters.

2.1.3 Different detector types shall be selectable. Detector types shall include stop-line, advance, presence, count, queue and directional presence.

2.1.4 Real-time detection status shall be viewable on a desktop or laptop computer.

2.1.5 Detection system parameters shall be kept in non-volatile memory.

2.1.6 The system shall have the capability of uploading and downloading set-up parameters remotely over the internet or locally over Ethernet.

2.1.7 The system shall provide dynamic zone reconfiguration without impacting zone detection.

3.0 DETECTION ZONES

3.1 The video detection system shall provide flexible detection zone placement anywhere and at any orientation within the combined field of view of the cameras. Zones shall be placed over other zones when necessary without impacting performance of overlapping zones.

3.2 Detection Zone Programming

3.2.1 Placement of detection zones shall be by means of a pointing device and desktop computer or laptop. The video monitor shall show images of the detection zones superimposed on the video image of traffic.

3.2.2 It shall be possible to use a pointing device and desktop computer or laptop to edit previously defined detector configurations to fine-tune the detection zone placement.

3.2.3 It shall be possible to individually adjust sensitivity for each detection zone in the system.

3.2.4 The detection zone shall change in color or intensity in real-time on the video monitor, thereby verifying proper operation of the detection system.

3.2.5 Detection zone outputs shall be configurable to allow the selection of presence, pulse, extend, and delay outputs. Timing parameters of pulse, extend, and delay outputs shall be user definable between 0.1 to 25.0 seconds.

3.2.6 All detection zones shall be capable to count the number of vehicles detected. The count value shall be internally stored for later retrieval remotely over the internet or locally over Ethernet. The zone shall also have the capability to calculate and store average speed and lane occupancy at bin intervals of 10 seconds, 20 seconds, 1 minute, 5 minutes, 15 minutes, 30 minutes and 60 minutes.

3.3 Detection Performance

Overall performance of the video detection system shall be comparable to inductive loops. Using standard camera optics and in the absence of occlusion, the system shall be able to detect vehicle presence with minimum 96% accuracy under normal conditions (day & night) and minimum 93% accuracy under adverse conditions (fog, rain, snow).

4.0 HARDWARE

4.1 Mounting

The 360 Degree Camera Video Detection System and 360 Degree Camera Assembly shall consist of all necessary mounting hardware, brackets, vertical support, etc., as supplied by the manufacturer, to be able to mount the camera on a vertical support pole or horizontal arm.

4.2 Environmental

The system shall be designed to operate reliably in the adverse environment such as the typical roadside traffic signal controller cabinet. Operating temperature shall be from -25 to 165° F at 0 to 95% relative humidity, non-condensing.

4.3 Electrical and Communication

4.3.1 Detection system configuration and data downloads shall be available remotely over the internet or locally over Ethernet connection on a desktop computer or laptop.

4.3.2 The system shall be equipped with a detector interface for at least 64 detector outputs. Output levels and protocols shall be compatible NEMA TS2 and NTCIP.

4.3.3 The detection camera to control unit shall be power over Ethernet (POE).

4.3.4 The system shall be capable of self-diagnostics and respond to faults by placing any faulty detection zones in a constant call mode. The system shall automatically revert to normal detection mode when a fault no longer exists on a channel.

4.3.5 The system shall be capable of automatically detecting low-visibility conditions such as fog and respond by placing all defined detection zones in a constant call mode. The system shall automatically revert to normal detection mode when the low-visibility condition no longer exists.

4.3.6 The detection system shall communicate with the traffic signal controller through the 2070 controller C12 SDLC connector as required for the application.

5.0 REMOTE CONNECTIVITY

5.1 The system shall allow video and data to be transmitted via the internet or an Ethernet connection to a central location where it can be displayed and/or stored.

5.2 The system shall include either client software or a web server for remote access of the detection system.

5.3 The interface unit shall support streaming video technology to allow the user to monitor video detection imagery.

5.4 Provisions shall be made to accommodate mating cable connectors to utilize jack screws for securing cables.

5.5 Hi-intensity status lights shall be provided on the control unit to facilitate system monitoring. Indicators shall be provided to show the status of the internal processor, video presence and indication of which video input is being monitored.

5.6 An Ethernet port shall be integrated within the control unit. The Ethernet port shall conform to 802.3 Ethernet specifications.

5.7 Control unit(s) maximum dimension shall be no more than 5” w x 11” h x 11” d.

6.0 CAMERA SYSTEM

6.1 The video camera shall consist of a 360º view for real-time vehicle detection. Each camera shall provide have a detection range of at least 180 feet. The camera shall have the dynamic range to function in low-visibility conditions such as snow, rain and fog.

6.2 The camera shall provide virtual pan, tilt, zoom (PTZ) to allow viewing of detection zones.

6.3 The camera and lens assembly shall be housed in an enclosure that is watertight and dust-proof. The camera shall be designed to avoid ice and condensation in cold weather. The camera shall be designed to prevent water droplets from interfering with normal operation. The camera shall be light-colored and shall include a sun shield to minimize solar heating and glare. The camera unit shall have the appropriate grounding to facilitate reliable operation.

6.4 The control unit shall be mounted inside a State standard traffic signal cabinet or State standard auxiliary cabinet. The control unit shall provide a terminal block for power connection, grounding, circuit protection, cable connection connectors, and a transient voltage suppressor to facilitate reliable operation.

6.5 The POE connection between the control unit and the camera shall function with minimal signal degradation up to 300 feet under normal operational conditions.

7.0 INSTALLATION

7.1 The manufacturer of the video detection system or their representative shall design camera system layout/placement and supervise the installation and testing of the video detection equipment. A factory certified representative from the supplier shall be on-site for a minimum of one day when a complete system is being installed.

7.2 The manufacturer shall provide either one complete set of maintenance manuals for the installed equipment or online copies shall be available on the manufacture's website. These manuals shall have complete setup, maintenance, and troubleshooting procedures presented in an organized format.

8.0 WARRANTY, MAINTENANCE AND SUPPORT

8.1 Materials supplied by the contractor for the video detection system shall be warranted by its supplier for a minimum of one (1) year.

8.2 During the warranty period, technical support by telephone or online shall be provided by the supplier during normal business hours.

8.3 During the warranty period, certified personnel from the supplier shall be on site within seventy-two (72) hours if required.

8.4 Ongoing software support by the supplier shall include updates of the detection system and supervisor software. These updates shall be provided free of charge during the warranty period and at a reasonable charge for the service life of the system.

8.5 The supplier shall maintain a program for technical support and software updates following expiration of the warranty period.

CONSTRUCTION DETAILS

The Contractor shall develop and deliver shop drawings which illustrate in detail mounting and camera(s) connection(s) and other equipment to the traffic signal equipment as shown on the contract documents.

METHOD OF MEASUREMENT

The 360 Degree Camera Video Detection System and 360 Degree Camera Assembly will be measured as the number of units satisfactorily installed in accordance with the contract documents.

BASIS OF PAYMENT

The requirement of Subsection 680-5.01 General, of the Standard Specifications shall apply with additional provisions as follows:

The unit price bid shall include the cost of all installation and materials (including but not limited to hardware, software, mounting bracket, coaxial cable, training, incidentals) as necessary to install the 360 Degree Camera Video Detection System and/or 360 Degree Camera Assembly as shown on the contract

documents in a State standard traffic signal cabinet, and technical support associated with providing the installation and the accepting of the 360 Degree Camera Video Detection System. The cost of all the wire runs from the cameras to the controller shall be included in the item(s). Payment is to be made as follows: 70% of the contract unit price upon installation: the remaining 30% is to be paid upon completing the final acceptance testing. The cost of poles, conduit excavation, conduit, and pull boxes will be paid for under their respective items.

Payment will be made under:

ITEM NO.	ITEM DESCRIPTION	UNIT
680.05010007	360 Degree Camera Video Detection System	Each
680.05020007	360 Degree Camera Assembly	Each

ITEM 680.05040004 – ADVANCE VEHICLE VIDEO DETECTION CAMERA FOR TRAFFIC SIGNALS

DESCRIPTION

This item shall consist of furnishing and installing a fixed video detection camera capable of detecting approaching vehicles at a distance to at least 400 feet from the camera. The camera will be required to operate in conjunction with a centralized traffic control processor and include mounting hardware for installation on a traffic signal mast arm or traffic signal pole as shown in the contract documents. The Contractor shall use products off the New York State DOT Approved Products List (APL).

Where advance detection cameras are being used in conjunction with a primary video detection system (such as intersection stop bar detection), the advance camera must be verified by the manufacturer of the primary detection system as being compatible with that system and will not require its own control unit.

MATERIALS

Each fixed video detection camera shall include a fixed position camera, mounting bracket and associated hardware, PoE injector, and all cables as required by the manufacturer to make the system operational.

Use of an advance camera not manufactured by the primary detection system will require certification by the primary system provider that its use and operation is compatible for use and will not alter or void the primary detection warranty period.

Environmental Operating Requirements:

- -30°F to 165°F (-34°C to 74°C)
- 0 to 95% non-condensing

CONSTRUCTION DETAILS

Each camera shall be mounted on the traffic signal pole or mast arm at a position and height necessary for the detection distances specified in the contract documents. The Regional Traffic Signal Maintenance Engineer (RTSME), Contractor and/or manufacturer's representative shall be on-site to setup and program the devices, consistent with the requirements for the detection system installed.

The locations shown on the contract documents are approximate. If, during construction, it's determined that the designed device sight distance cannot be achieved due to terrain, the camera may require relocation and/or elevation adjustments to meet the necessary sight distance. Modifications or adjustments to the installation per plan must be made under the direction and approval of the RTSME.

ITEM 680.05040004 – ADVANCE VEHICLE VIDEO DETECTION CAMERA FOR TRAFFIC SIGNALS

METHOD OF MEASUREMENT

This work will be measured as the number of EACH Advance Vehicle Video Detection Camera satisfactorily furnished, installed, and tested.

BASIS OF PAYMENT

The unit price shall include the cost of furnishing all labor, materials (including but not limited to hardware, software, mounting bracket, coaxial cable, training, incidentals) and equipment necessary to satisfactorily complete the work. No payment will be made until each unit has been tested, verified, and approved by the RTSME.

ITEM 680.80324515 - INSTALL MICROCOMPUTER CABINET

DESCRIPTION:

Under this item the contractor shall install Microcomputer Cabinets, which are supplied by the State, at locations shown on the plans or where directed by the Engineer. The State will supply and install the microprocessor, peripheral equipment and software.

MATERIALS:

The State will supply the Microcomputer Cabinets to the Contractor to install. The Contractor shall provide conduit nipples, grounding bushing, L. B. fitting and mounting hub for wiring entrance interface panel between the steel pole and the aluminum cabinet base. The wiring entrance interface panel shall be of sufficient size to accommodate a minimum 4” conduit and may be larger if required to accommodate the traffic signal wiring. Cabinet features, dimensions and location of interface panel for field wiring are detailed in the NEW YORK STATE TRANSPORTATION MANAGEMENT EQUIPMENT SPECIFICATIONS.

CONSTRUCTION DETAILS:

The requirements of section 680-3 of the Standard Specification shall apply with the following additions:

1. The Contractor's request for delivery of the Microcomputer Cabinets supplied by the State shall be made, in writing , five weeks in advance, to the Engineer. The Microcomputer Cabinets will be delivered to the Contractor at the Regional Signal Shop. The Engineer will advise the Contractor of the location of the Regional Signal Shop. At least one week in advance of delivery, the Contractor shall make an appointment through the Engineer as to the time and date the Microcomputer Cabinets will be available to the contractor.

2. The Contractor shall mount the Microcomputer Cabinet to the steel signal pole as shown on the contract plans, Standard Sheets or as directed by the Engineer.

3. The Contractor shall enlarge the hole for conduit located in the bottom of the Microcomputer Cabinet, if necessary, to accommodate the traffic signal wiring.

4. In unpaved areas, the Contractor shall install a concrete work pad in front of the cabinet door as specified on the Standard Sheets or the plans. The work pad shall meet the requirements of section 608 of the Standard Specifications for concrete sidewalk, and include concrete, fill or excavation and all grading as necessary.

5. The Contractor shall establish ground as shown on the contract plan and further defined in the N.Y.S. Standard Specifications of Construction and Materials. The Contractor shall run number six copper stranded wire from the ground lug connection at the base of the pole to the EARTH ground bus within the Cabinet. The Contractor shall connect the power line common to the minus AC ground bus.

6. The Contractor shall arrange with the utility company and the Engineer to have the power hooked up to the Microcomputer Cabinet(s).
7. The Contractor shall perform all tests listed under Section 680-3.32, Tests, of the N.Y.S. Standard Specifications for Construction and Materials with the exception of the Functional Test, when all of his

traffic signal installation work on the entire project, has been complete. The State may, at its option, have the Contractor perform the required testing at each individual signal installation location as soon as he completes his signal installation work at that location. The State will assume responsibility for the Functional Test.

8. Within 30 days of the Contractor successfully completing the required testing on his installation work, the State will install the microprocessor, peripheral equipment and software into the Microcomputer Cabinet. The State may, at its option, perform tests on the traffic signal equipment before installing the microprocessor, peripheral equipment and software.

9. Upon completion of the microcomputer installation, the Engineer may, at his option, conduct a functional test of the signal system for a period not to exceed 14 days. During this testing period, the existing signal system may be turned off or on as directed by the Engineer.

METHOD OF MEASUREMENT:

This work will be measured as the number of Microcomputer Cabinets installed in accordance with the plans, specifications and directions of the Engineer.

BASIS OF PAYMENT:

The unit price for each Microcomputer Cabinet installed shall include the cost of all labor, material, testing and equipment necessary to complete the work.

The concrete work pad, if required, and any necessary fill, excavation or grading, is to be paid for under this item.

Payment for connecting all input and output wiring to the interface panel of the Microprocessor Cabinet shall be included in the bid price for each specific cable item.

ITEM 680.80325010 - ALUMINUM MICROCOMPUTER CABINET BASE

DESCRIPTION.

Under this item the contractor shall furnish and install an aluminum microcomputer cabinet base at locations shown on the plans or as directed by the Engineer.

MATERIALS.

Materials for this work shall meet the requirements of the following subsections of Section 700 - Materials Details:

Base	Grade 5052-H32 Aluminum
Anchor bolts	723-60
Grouting	701-05

The base shall have full weld seams and shall conform in all respects to the attached drawing.

CONSTRUCTION DETAILS.

The cabinet base shall be fabricated and mounted on a concrete base in accordance with the details shown on the plans, standard sheets and as ordered by the Engineer. When the cabinet base is mounted on an existing foundation, the existing anchor bolts shall be removed as shown on the plans. Then the new anchor bolts shall be grouted into drilled holes as indicated on the plans.

METHOD OF MEASUREMENT

This work will be measured by the number of cabinet bases furnished and installed in accordance with the plans and specifications.

BASIS OF PAYMENT

The unit price bid for each cabinet base shall cover the cost of fabrication, installation, all labor, material and equipment necessary to complete the work.

When the plans call for mounting the cabinet base on an existing foundation the cost of removing the existing anchor bolts and installing new anchor bolts shall be included in the price bid for this item. When plans call for mounting the cabinet base on a new foundation, the installation of anchor bolts in the foundation shall be included in the price bid for this item.

New concrete foundations will be paid for under a separate payment item.

ITEM 680.80325010 - ALUMINUM MICROCOMPUTER CABINET BASE

ITEM 10680.803250 M - ALUMINUM MICROCOMPUTER CABINET BASE

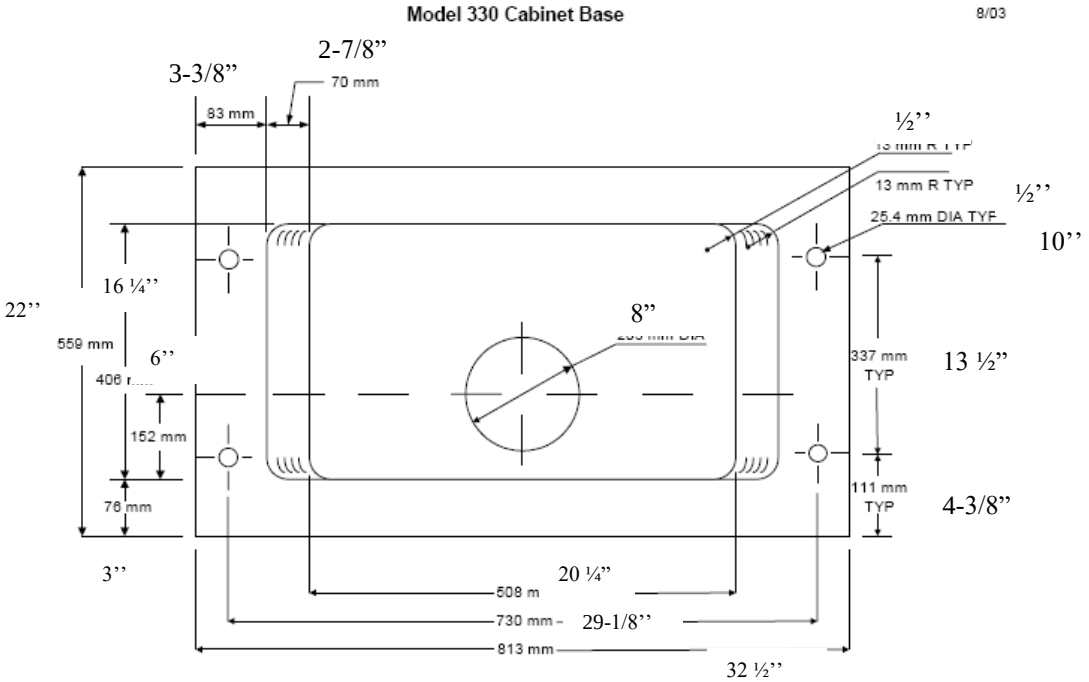

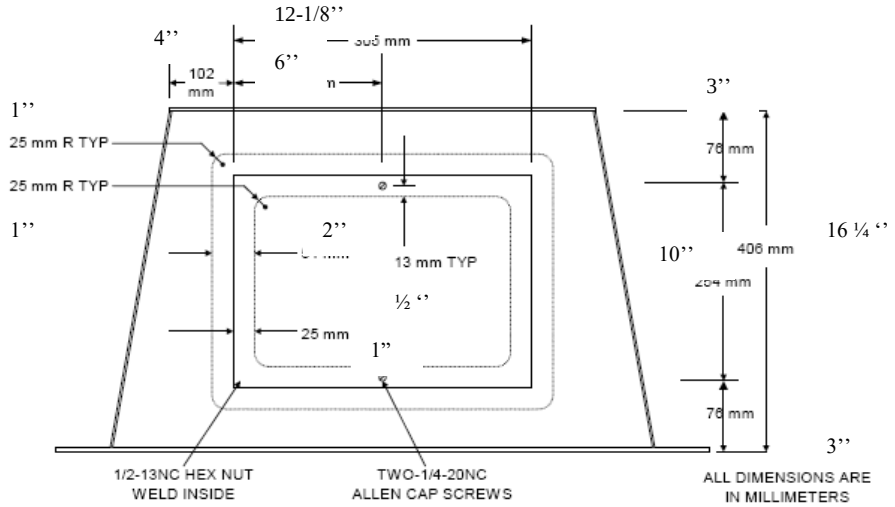

& INCHES

12/28/08E

ITEM 680.81330010 – AUDIBLE PEDESTRIAN SIGNAL
ITEM 680.81340010 – AUDIBLE PEDESTRIAN SIGNAL - WITH POST

DESCRIPTION
Under this item the contractor shall furnish, install and configure an ADA compliant pedestrian push button station with audio capability, and its control unit, at each location as indicated in the contract documents or where directed by the Engineer.

MATERIALS
Each installed location shall have the following:

1. Pedestrian Push Button Station
The station housing shall be no larger than 14.25 inch high, 5.50 inch wide and 2.50 inches in depth.

The station housing shall be constructed of cast aluminum, have a powder coated paint finish and be dark green in color.

The station shall include a weather proof speaker to emit the audible sounds. This speaker shall be recessed and located in back of the unit

The station shall include a weatherproof ADA compliant 2" diameter push button that is pressure activated and includes a raised direction arrow. The push button shall be constructed of cast aluminum, have a powder coated paint finish and be dark green in color.

The station shall include a 9 inches x 15 inches aluminum pedestrian message sign. The sign supplied shall have the following information included on it: “To Cross Push Button” statement and explanations of the pedestrian signal indications controlling the intersection crossing - “Illuminated Person”, “Flashing Hand” and “Steady Hand”.

2. Control Unit
Each pedestrian push button station shall be controlled by a control unit. The control unit shall be designed so that it fits into any pedestrian signal head used by NYS. The control unit will be installed inside of the pedestrian signal head that is associated with the station, unless otherwise indicated by the contract documentation or directed by the Engineer. The input side of the control unit will be connected in parallel to the Walk and

Don’t Walk AC signals that control the hand/person pedestrian LED’s installed in the pedestrian signal head. The output side of the control unit will connect and control the push button station. Mounting hardware, to facilitate mounting of the control unit inside

of the pedestrian signal head, shall also be provided.

3. Programming Device
If an external device is needed to set up, configure and program the pedestrian push station, one device, unless this requirement is waived by the contract documents or by the Engineer, shall be supplied for each intersection that a pedestrian push button station is installed in.

ITEM 680.81330010 – AUDIBLE PEDESTRIAN SIGNAL
ITEM 680.81340010 – AUDIBLE PEDESTRIAN SIGNAL - WITH POST

OPERATIONAL FEATURES
The stations push button shall be capable of providing the following:

An LED light indication and an audible tone for confirmation of push button activation.

A vibrating push button during the pedestrian walk cycle.

The audio sounds and messages emitted during the pedestrian walk cycle and in any combination shown below:

- A Standard pre-programmed voice walk message stating that the walk sign is on.
- Custom (programmed by vendor) walk messages as a substitute for the standard walk message.
- Audible chirp (for East/west intersection crossings) and cuckoo (for North/South intersection crossings).
- A minimum of one non-custom (pre-programmed and field configurable) voice informational message stating direction of intersection crossing.
- Custom (programmed by vendor) voice information messages.

Sounds/tones or the clearance countdown time remaining verbally during the pedestrian clearance cycle.

A standard pre-programmed station "locate" tone during the pedestrian don't walk phase. Custom (programmed by vendor) tones shall be available as a substitute for the standard locate tone.

The ability to detect and measure ambient sounds and make volume adjustments for all sounds so that they are produced above this ambient sound.

AUDIO SPECIFICATIONS
Speaker Ratings – 15 Watts, 8 Ohms.

Volume Settings – Independent minimum and maximum volume settings for locate sounds, clearance sounds, walk sounds. Minimum volume setting informational messages. Sounds played will not be less than the minimum setting or more than the maximum setting.

Maximum Output Level - Locate sounds, clearance sounds and informational messages shall be capable of producing 60db of audio output.

Volume Over Ambient – All sounds shall be capable of being played relative to the measured ambient sound at the intersection, but restricted to the minimum and maximum volume settings of each sound. The adjustment range of volume over ambient should be from at least from 0db to 20db over ambient in increments of at least 5db steps.

Audible Station Locating Tone – 880Hz plus harmonic, 0.1 second duration, 1 second interval.

Audible Chirp Sound – From 2700 to 1700 Hz, 0.2 second duration, 1 second interval.

Audible Cuckoo Sound – From 1250 to 1000 Hz, 0.6 second duration, 1.8 second interval.

ENVIRONMENTAL SPECIFICATIONS

ITEM 680.81330010 – AUDIBLE PEDESTRIAN SIGNAL
ITEM 680.81340010 – AUDIBLE PEDESTRIAN SIGNAL - WITH POST

The push button station and push button control unit shall operate over the temperature range of -40 deg F to +165 deg F.

POST – Post installed shall be in accordance with the standard sheet for *Pedestrian Signal Details*.

CONSTRUCTION DETAILS

The contractor shall install pedestrian push button station(s), any associated control unit(s), and furnish per the requirements of this specification any programming device as shown in the contract. Unless otherwise waived, the Contractor shall submit to the Regional Director, within 30 days following the award of contract, detailed specifications and catalog cuts of all equipment that is to be installed or furnished.

The post and sign shall be installed in accordance with the details specified on the standard sheet.

METHOD OF MEASUREMENT

This item will be measured by the number of pedestrian push button stations, control units and programming devices furnished and installed in accordance with the contract.

BASIS OF PAYMENT

The unit price bid shall include the cost of all labor, material and equipment necessary to complete the work.

Where the pushbutton and sign assembly is installed on its own post, the unit price bid shall also include the cost of post, sawcutting, excavation, backfill, concrete, restoration of surfaces, and conduit bend and fittings.

ITEM 680.81500010 – PEDESTRIAN COUNT-DOWN TIMER MODULE

1.0 DESCRIPTION.

The purpose of this specification is to provide the minimum performance requirements for a Pedestrian LED Countdown Timer Module to be used in conjunction with Pedestrian Signal Indications. The unit will provide Pedestrians with numerical Pedestrian timing of the Pedestrian Clearance Interval. The unit will be connected in parallel with LED Pedestrian Signal Indications, Hand and Walking Person, and in series with the Model 200 switch packs controlling the LED Pedestrian Signal Indications.

This specification refers to definitions and practices described in "Vehicle Traffic Control Signal Heads" referred to in this document as "VTCSH." and "Pedestrian Traffic Control Signal Indications", referred to in this document as "PTCSI", published in the *Equipment and Materials Standards of the Institute of Transportation Engineers*.

2.0 MATERIALS.

A. PHYSICAL AND MECHANICAL REQUIREMENTS

A.1 The countdown timer shall be designed to fit in the message bearing area of a 12 inch pedestrian traffic signal housing built to the PTCSI Standard.

The unit shall be a single, self-contained device, not requiring on-site assembly for installation into an existing traffic signal housing and not require special tools for installation. The timer module shall fit into Pedestrian Traffic Signal housings that are void of any incandescent lamp components - bulb sockets, gaskets, and reflector - and without the need to modify the housing. The module shall be sealed to provide a weather tight enclosure and an insulating covering for all electrical connections and electronic components. The unit shall fit securely in the housing and shall connect directly to existing electrical connections inside of the housing by means of push on type connectors.

A one piece "U" shaped cross section rubber gasket or other suitable means shall be provided with each module to insure a weather tight fit between the door of the signal housing and the module. The quality of gasketing supplied, and any method used to adhere the gasketing to the module if the gasketing is affixed to the module using adhesive, shall be such that the gasketing and adhesion technique shall not appreciably deteriorate over the life of the module when the module is used in its intended application.

The message bearing surface of the module shall be supplied with two numerical LED displays to display a count from "00" to "99". These displays shall be a minimum 7 inches high and 3.75 inches wide. The display segments that comprise the numbers shall be approximately 0.5 inches wide and be formed by two or more rows of LED's.

Materials used for the lens and signal module construction shall conform to ASTM specifications for those materials.

The lens of the LED countdown timer shall be polycarbonate UV stabilized and a minimum of 1/8" thick

Each module shall be identified on the back side with the following:

ITEM 680.81500010 – PEDESTRIAN COUNT-DOWN TIMER MODULE

---- Manufacturer's Trade Mark/Name
---- Part number as shown in the NYS DOT's Transportation Management Equipment QPL
---- Serial number
---- Voltage rating
---- Power consumption (Watts and Volt-Ampere)
---- Each module shall have a sticker stating compliance to FCC Title 47 Subpart B, Section 15 regulations
---- An Indication to orient the user to the Top of the Unit (such as an Arrow symbol or the word top)

A.2 Barcoding. All Modules shall be barcoded using Barcode type 128. Barcodes shall be printed on a quality polyester white label (Black print only) where the print on the label and adhesion of the label to the surface shall be weather, UV and temperature resistant. Size of the label shall be 0.5 inch wide by 1.75 inch long. All barcodes shall be printed entirely on the label and be completely legible. Text of the Barcode Information shall also be legibly printed on the label.

Information on the Barcode shall be separated into the following four parts, but printed continuously on the label in the order shown:

---- Model Number - 2 Digits (Assigned Model Number for Pedestrian LED Countdown Timers is CT)
---- Manufacturer - 2 Digits. Digits assigned by NYSDOT upon Product Qualification
---- Date of Manufacture - 4 Digits. First two digits represents Month of Manufacture, Second two digits represent Year of Manufacture
---- Serial Number - minimum 6 digits assigned, maximum 10 digits assigned

An example of the information printed on the barcode for a Pedestrian LED Countdown Timer built to these specifications manufactured in June of 2008 with a serial number of 018356 by a company whose manufacturers' code is XX would be CTXX0608018356.

Barcode labels, meeting the same requirements of the labels above, shall also be placed on the outside of all shipping boxes. Example: Should the shipping box contain six modules, individual barcode labels for all of the six modules inside the box shall be affixed to the outside of the box. The labels shall also be grouped together so that they can be easily and quickly scanned by a barcode reader.

A.3 The contractor shall provide the barcode ID numbers for all LED's installed. This information shall be provided in the form of an electronic file (Excel Spreadsheet) and summarized by intersection. Barcode IDs will be collected by one of the following methods selected by NYSDOT:

1) Scanning the bar codes of each module with a bar code scanner provided by NYSDOT for use on this project only. The information will be downloaded to a spreadsheet.

2) Manually entering the bar code IDs of each module into an electronic spreadsheet.

This information shall be provided to the EIC on a weekly basis. The cost for this work shall be included

in the bid price for various LED modules.

B. ENVIRONMENTAL REQUIREMENTS

B.1 The Countdown Timer signal module shall be rated for use in the ambient temperature range of -40 deg F to +165 deg F. The module shall be sealed to prevent dust and moisture intrusion and to protect all internal LED and electrical components. The module shall be capable of operating at rated voltage in an environment of +74 degrees Centigrade / 85% Relative Humidity for 1000 hours without the formation of internal condensing moisture.

C. OPTICAL REQUIREMENTS

C.1 The measured chromaticity coordinates of the individual led light sources used in the module shall conform to the chromaticity requirements of the Pedestrian "Hand" symbol of the PTCSI standard.

C.2 The module shall be designed so that when operated over the specified ambient temperature and voltage ranges during the warranty period of the unit, the numeric display shall attract the attention of, and be readable to, a viewer (both day and night) at all distances from 3 m to the full width of the area to be crossed.

C.3 To minimize luminous degradation over the life of the unit, the individual led light sources used in the unit shall be manufactured using AlInGaP technology or equal.

C.4 Variations in operating line voltage of between 80 and 135 volts rms shall have minimal effect, less than +/- 10 percent, on the luminous output of the module.

D. OPERATIONAL REQUIREMENTS

D.1 The module will be designed to countdown to zero only the "Clearance" time of the Pedestrian Interval. During the Steady Don't Walk Indication the display will always be dark.

D.2 The module, when connected to the appropriate Pedestrian switch pack outputs, shall have an automatic learn mode in order to learn and store the Pedestrian clearance times in its memory and to self-adjust for subsequent changes in Pedestrian Clearance time.

> **D.2.1** Following power restoration to the unit after a power outage of greater than two seconds the unit will remain dark for one pedestrian cycle to learn, acquire the current pedestrian clearance timing, replace any values that were stored in memory prior to the power outage with the newly acquired values and display the newly acquired times on the next pedestrian cycle.
>
> **D.2.2** The unit shall detect changes in pedestrian clearance timing during normal operation and act upon them as described below:
>
> > **D.2.2.1** The unit will automatically re-program itself should it detect any increase in Pedestrian clearance timing. The increased timing shall be displayed on the subsequent pedestrian cycle.

D.2.2.2 The unit will detect any reductions in pedestrian clearance timing (such as those occurring during a traffic Preemption cycle) and display on the subsequent pedestrian cycle the timing stored in its memory prior to the shortened pedestrian cycle.

D.2.2.3 The unit will re-program itself should it detect two consecutive identical shortened pedestrian clearance cycles and display this timing on the next pedestrian cycle.

D.3 The unit shall be designed to suspend any timing and go dark when, for any reason, the timing of the Ped Clearance cycle is terminated before reaching the "zero" count and the clearance switchpack output reverts to a steady "On" condition.

D.4 The unit shall be capable of timing consecutive complete Pedestrian cycles outputted by the traffic control system.

D.5 The unit shall be designed to retain the Pedestrian timing stored in its memory for all power outages of less than one second and to continue timing of the Pedestrian timing if the traffic control system has resumed Pedestrian timing following this duration outage. For outages of between one and two seconds memory may or may not be retained. For all power outages greater than two seconds the unit will resume operation as described in Paragraph 4.2.

E. ELECTRICAL

E.1 All wiring shall meet the requirements of Section 13.02 Wiring of the VTCSH standard. Each wire shall be approximately 1 m long. All wiring shall be rated for use over the temperature range of -40 deg F to +165 deg F. Under normal handling of the module over the specified temperature range, the wiring insulation shall not crack or fray along its entire length. The wires of the module shall be terminated in insulated 0.250 inch female quick disconnect push on terminals.

Units shall be supplied with three colored coded wires as defined below:

Red (Connection to Pedestrian Hand Switch pack output), Brown (Connection to Pedestrian Man Switch pack output) & White (AC Neutral)

E.2 The module shall operate with 60 Hz AC line voltage ranging from 80 volts to 135 volts rms. The circuitry shall prevent flicker over this voltage range. Rated voltage for all optical and power measurements shall be 120 volts rms.

E.3 The on-board circuitry of the module shall include voltage surge protection, to withstand high-repetition noise transients and low-repetition high-energy transients as stated in Section 2.1.8, NEMA Standard TS 2-2003.

E.4 Each module shall be designed so that the timer and displays do not function when connected to any voltage between 80 and 135 volts rms and in series with an impedance of 15 kohm (either resistive or capacitive) or greater.

E.5 The individual LED light sources of the unit shall be wired so that a catastrophic failure of one LED light source will not result in the loss of illumination of more than one display segment.

E.6 All modules shall contain filtering dedicated to prevent inducing electronic noise into the AC power lines. In addition the module and associated on-board circuitry shall meet the requirements of the Federal Communication Commission (FCC) Title 47, Subpart B, Section 15 regulations concerning the emission of electronic noise by Class A digital devices.

E.7 All Modules shall be fused. The fuse shall be located before any electronic component used in the module and placed in series with the colored wire of the unit. Should fusing be external to the unit by placing inline fuse holders into the wiring of the unit, the fuse holder shall be installed so that it is between six to ten inches from the housing of the unit. Each individual circuit in the unit shall be fused separately. Fuse selection shall be such that it provides reliable operation for its intended operation.

E.8 All unit types shall be operationally compatible with the traffic signal equipment that each type is designed and intended to interface with. This equipment includes all controllers, conflict monitors, current monitors, switch packs and flashers and LED Signal Modules currently in use by the New York State Department of Transportation.

E.9 Power Requirements. The maximum power consumption of each circuit in the unit, when on, shall not exceed 10 Watts at rated voltage.

F. PERFORMANCE TESTS

F.1 Prior to shipment, each module shall be energized (burned-in), for a minimum of 24 hours, at rated voltage, and at a 100 percent on-time duty cycle. This test shall be conducted in an ambient temperature of 60 degrees Centigrade. Any failure of the module occurring during burn-in shall be cause for rejection

F.2 Each timer module shall be visually inspected for any exterior physical damage or assembly anomalies. Careful attention shall be paid to the surface of the lens to ensure there are no scratches (abrasions), cracks, chips, discoloration, or other defects.

F.3 Each shipment from the manufacturer shall be furnished with a Certificate of Compliance. The certificate shall certify that the modules comply with the requirements of these specifications. The certificate shall include the signature of the person responsible for certifying the tests. In addition to the certificate, the modules shall be supplied with copies of all applicable test reports.

G. SAMPLE SUBMISSION

Low bidder(s) may be required to submit a sample unit. In the event that a sample is required, it shall be provided within ten (10) working days of receipt of the request. Each device submitted shall be accompanied by five copies of the complete circuit schematic for the unit, one standard catalog cut and one manufacturers specification sheet for the individual LED light sources used in the unit. Documentation shall also be provided describing the techniques used to ensure the units will satisfy the luminous intensity requirements over the life of the warranty. This documentation may include items such as the description of circuitry incorporated in the module needed to meet this requirement or literature from the LED manufacturer describing the expected degradation of luminous intensity of the individual

ITEM 680.81500010 – PEDESTRIAN COUNT-DOWN TIMER MODULE

LED light sources used in the fabrication of the module over the life of the unit and operating temperature range.

3.0 CONSTRUCTION DETAILS

The contractor shall install the Pedestrian Count-Down Timer Module in new or existing traffic signal heads as shown on the plans or as ordered by the engineer. Unless otherwise waived, the Contractor shall submit to the Regional Director within 30 days following the award of contract, detailed specifications and catalog cuts of the equipment he proposes to install.

4.0 METHOD OF MEASUREMENT

This item will be measured for payment as the number of Pedestrian Count-Down Timer Modules furnished, installed in accordance with the contract documents or as ordered by the Engineer.

5.0 BASIS OF PAYMENT

The unit price bid shall include the cost of all labor, material, and equipment necessary to complete the work as shown on the plans, on the standard sheets, or as ordered by the Engineer. The cost of the pedestrian signal heads shall be paid for under their respective items.

ITEM 680.90920103 – ELECTRIC METER CHANNEL, 100 AMPERE, SINGLE PHASE, 240 VOLT FOR TRAFFIC SIGNAL INSTALLATIONS

DESCRIPTION

The Contractor shall furnish and install electric meter channels for traffic signal installations where shown in the contract documents or where directed by the Engineer.

MATERIALS

All materials shall be approved by the local utility company (customer).

The electric meter channel shall be a 100 ampere, 3- wire, 240 volt, 4-terminal ringless style, lay-in type with line and load connectors rated for a maximum #2 AWG wire size . The meter channel shall be wired as shown in Figure No. 1.

CONSTRUCTION DETAILS

The electric meter channel shall be mounted on a signal pole, a wood post, or a mounting board as shown in the contract documents.

Grounding shall be accomplished as shown in the contract documents.

Certification inspection by an approved electrical inspection agency for the electrical service shall be required.

METHOD OF MEASUREMENT

This work will be measured by the number of meter channels installed.

BASIS OF PAYMENT

The unit price bid for this item shall include the cost of furnishing all labor, material and equipment necessary to satisfactorily complete the work.

ITEM 680.90920103 – ELECTRIC METER CHANNEL, 100 AMPERE, SINGLE PHASE, 240 VOLT FOR TRAFFIC SIGNAL INSTALLATIONS

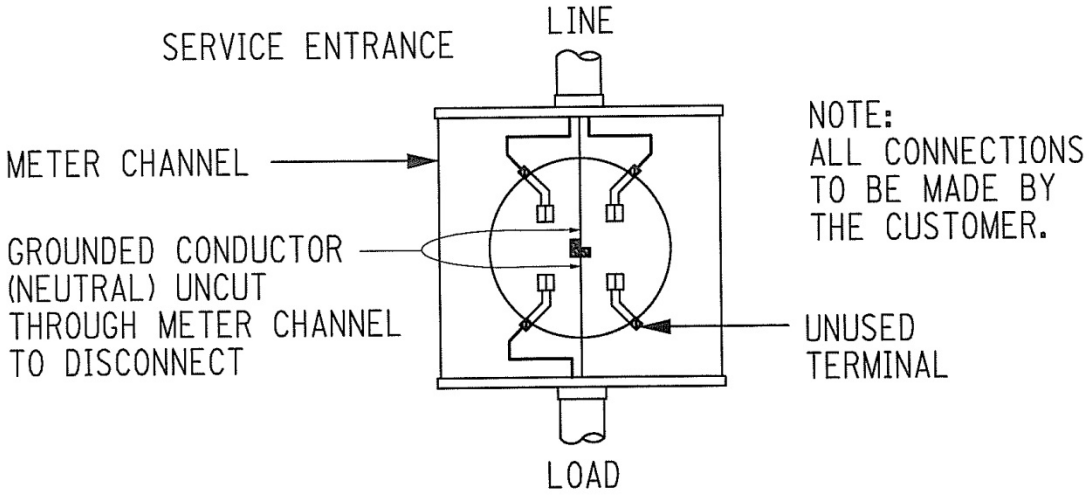

TYPICAL ONE METER CHANNEL INSTALLATION
SINGLE-PHASE, 100 AMPERE RATED, 3 WIRE,
240 VOLTS ONLY, 4 TERMINAL
3kVA MAXIMUM DEMAND

FIGURE 1

ITEM 680.94997008 – FURNISH AND INSTALL ELECTRICAL DISCONNECT/GENERATOR TRANSFER SWITCH

DESCRIPTION
Under this item, the Contractor shall furnish and install a electrical disconnect/generator transfer switch as shown on the contract documents, or the standard sheets or as directed by the Engineer.

MATERIALS
The Contactor shall furnish a electrical disconnect/generator transfer switch from a manufacture listed on the current New York State Department of Transportation Traffic Signal Laboratory's Qualified Product List.

CONSTRUCTION DETAILS
The electrical disconnect/generator transfer switch shall be attached to the pole or cabinet as shown on the contract documents or the standard sheet or as directed by the Engineer.

METHOD OF MEASUREMENT
This item will be measured for payment as the number of electrical disconnects/generator transfer switches furnished installed and accepted by the Engineer-in-Charge.

BASIS OF PAYMENT
The unit price bid shall include the cost of all labor, material and equipment necessary to complete the work as shown on the contract documents, on the standard sheets, or as directed by the Engineer.

ITEM 680.95010415 - SERVICE CABLE 1 CONDUCTOR, NO. 04 AWG
ITEM 680.95010615 - SERVICE CABLE 1 CONDUCTOR, NO. 06 AWG
ITEM 680.95010815 - SERVICE CABLE 1 CONDUCTOR, NO. 08 AWG
ITEM 680,95011015 - SERVICE CABLE 1 CONDUCTOR, NO. 10 AWG
ITEM 680.95020415 - SERVICE CABLE 2 CONDUCTOR, NO. 04 AWG
ITEM 680.95020615 - SERVICE CABLE 2 CONDUCTOR, NO. 06 AWG
ITEM 680.95020815 - SERVICE CABLE 2 CONDUCTOR, NO. 08 AWG
ITEM 680.95021015 - SERVICE CABLE 2 CONDUCTOR, NO. 10 AWG

Description. Under this item the Contractor shall furnish and install in a raceway or conduit service entrance cable which is suitable for wet or dry locations at the location indicated on the plans and as directed by the Engineer. This cable will transmit current from the power source to the signal controller cabinet.

Material. The cable shall conform to the requirements for service entrance cable of the National Electrical Code and be Underwriters Laboratory approved. The cable shall be rated for 600 volt service and the conductors shall be stranded copper wire or as specified in the contract documents.

Construction Details. Service cable shall be installed in accordance with Details: the contract documents and as directed by the Engineer. A sufficient length of cable, not less than 24 inches, shall be left at the end of the run to allow for the tap to be made by the utility company at the power source entrance. The Contractor shall make all connections at the fused disconnect and the ground bar in the signal controller cabinet.

Method of Measurement. Service cable will be measured as the number of linear feet actually installed in accordance with the contract documents or as directed by the engineer.

Basis Of Payment. The unit price bid per linear foot shall include the cost of all materials, labor, connections, incidental fittings, equipment, tools, and all necessary tests to complete the installation.

ITEM 683.06010013 - TRAFFIC MONITORING CABINET

DESCRIPTION:

Under this item, the Contractor shall furnish and install cabinets at the locations shown by the Contract Documents and as ordered by the Engineer. These cabinets shall house equipment furnished and installed under other contract items.

MATERIALS:

Each cabinet shall be provided complete with all internal components and all mounting hardware necessary to provide for the installation of traffic monitoring equipment.

All cabinets of the same type shall be identical in size, shape, and quality throughout the entire contract. In addition, the cabinets shall be equipped internally as specified herein, and as required to suit the specific complement of equipment shown on the plans.

All cabinets shall be of welded sheet aluminum construction, ⅛" thickness 5052-H32 sheet aluminum.

All equipment under this item is to be in full conformance with the New York State Standard Specifications unless otherwise stated herein.

The equipment design shall utilize the latest available techniques, minimum number of different parts, subassemblies, and/or circuits to maximize standardization and commonality.

Electronic Components

No component shall be of such design, fabrication, nomenclature, or other identification as to preclude the purchase of said component from any wholesale electronics distributor or from the component manufacturer.

Mechanical Components

Hardware

All external screws, nuts, and locking washers shall be stainless steel; no self tapping screws shall be used unless specifically approved by the Engineer. All screws, nuts, and locking washers used internally shall be of corrosion resistant material, or suitably plated to resist corrosion. All material furnished shall be new, first quality, and used in accordance with the highest industry practices.

ITEM 683.06010013 - TRAFFIC MONITORING CABINET

Material

All parts shall be made of corrosion resistant material, such as plastic, stainless steel, aluminum, or brass or shall be treated with corrosion resistance such as cadmium plating or galvanizing.

All materials used in construction shall be resistant to fungus growth and moisture deterioration.

Dissimilar metals apt to corrode through electrolysis under the environmental operating conditions specified shall be separated by an inert material. The equipment shall be modular in design such that major portions may be readily replaced in the field.

All equipment shall be designed for ease of installation and maintenance. All component parts shall be readily accessible for inspection and maintenance.

Functional Requirements

These cabinets shall be provided with fully wired side panels with all necessary terminal boards, wiring harnesses, connectors, and attachment hardware for each cabinet location. All equipment shall be shelf mounted. All terminals and panel facilities shall be placed on the lower portion of the cabinet walls below all shelves. All cabinets shall be keyed alike with one key to be provided for each cabinet.

The Contractor shall submit a cabinet layout for each cabinet type for review by the Engineer. Only cabinets with approved layouts will be accepted under this Contract. Each field cabinet shall, as a minimum, be supplied with the following:

Fan and Thermostat (non-solar continuous count applications only)
Power Distribution Panel (non-solar continuous count applications only)
Air Filter
Adjustable Shelves (2)
Locking Mechanism
Lock
Ground Bus (2)
Surge Protection (for solid state equipment in continuous count applications only)
Terminal Blocks
All Necessary Installation and Mounting Hardware

Specific Requirements

Electrical

Power Distribution Panel

ITEM 683.06010013 - TRAFFIC MONITORING CABINET

The cabinets shall be furnished with a power distribution panel. The necessary 120 VAC power for non-solar continuous count applications shall be distributed from a power distribution terminal board which is fed from the equipment circuit breaker branch on the power panel.

The panel shall include the following equipment:

Duplex Outlet (non-solar continuous count applications only)

115 VAC convenience outlet with integral ground fault interrupt, protected by a circuit breaker. The receptacle shall be a NEMA Type 5-15R duplex receptacle located so that no electrical hazard shall exist when used by service personnel.

Lamp (non-solar continuous count applications only)

A panel mounted 40 watt weatherproof incandescent lamp with an on-off switch.

Circuit Breaker(s) (non-solar continuous count applications only)

The circuit breaker shall be approved and listed by Underwriter's Laboratories. The operating mechanism shall be enclosed, trip free from operating handle on overload, and trip indicating. Contacts shall be silver alloy enclosed in an arc quenching chamber. Each cabinet used in a continuous count application shall have, as a minimum, a circuit breaker to protect the lamp, vent fan and duplex outlet.

Circuit breakers shall be unaffected by ambient temperature range, relative humidity, applied power, shock, and vibration range specified in NEMA TS1. Breakers shall have a minimum interrupt capacity of 5000 amperes.

Power Cable Input and Junction Terminals

Power Distribution Blocks suitable for use as a power feed and junction points shall be furnished and installed for two and three wire circuits in cabinets used for continuous count applications. The line side of each circuit shall be capable of handling the number of AWG wire sizes as shown on the plans.

Communications Terminal

One RJ11 modular telephone jack shall be installed in the cabinet for continuous count non-cellular communications applications. This terminal facility shall provide for the termination of the multi-pair cables as well as distribution of the

particular associated cabinet pairs.

Wiring

Cabinet wiring shall be provided for the equipment complement as specified on the plans.

All cabinet wiring where connected to terminal strips shall be identified by the use of insulated pre-printed sleeving slipped over the wire before attachment of the lug or making the connection. The wire markers shall carry the legend in plain words with sufficient details so that a translating sheet will not be required.

All wires shall be cut to the proper length before assembly. No wires shall be doubled back to take up slack. Wires shall be neatly laced into cables with nylon lacing. Cables shall be secured with nylon cable clamps. The grounded side of the electric service shall be carried throughout the cabinet without a break.

All electrical connections in the cabinet shall have sufficient clearance between each terminal and the cabinet to provide an adequate distance to prevent a leakage path or physical contact under stress. When these distances cannot be maintained, barriers must be provided. All equipment grounds shall run directly and independently to the ground bus.

All wiring containing line voltage AC shall be routed and bundled separately and/or shielded from all low voltage circuits. All conductors and live terminals or parts, which could be hazardous to maintenance personnel, shall be covered with suitable insulating material.

All conductors used in the cabinet wiring shall be #22 AWG or larger. All wiring containing line voltage AC shall be #14 AWG or larger.

The AC return and equipment ground wiring shall be electrically isolated from each other and the AC + wiring by an insulation resistance of at least 10 Megohms when measured at 250 VAC. Return and equipment grounding wiring shall be color coded white and green respectively.

Terminal Blocks

Terminal strips located on the panels shall be accessible to the extent that it shall not be necessary to remove the electronic equipment from the cabinet to make an inspection or connection.

Terminal blocks shall be two position multiple pole barrier type. Shorting bars shall be provided in each of the positions provided along with an integral marking strip. Terminal blocks shall be so arranged that they shall not upset the entrance, training, and connection of incoming field conductors. All terminals shall be suitably identified by legends permanently affixed and attached to the terminal blocks. Not more than three conductors shall be brought to any one terminal screw. No electrically alive parts shall extend beyond the protection afforded by the barriers. All terminal blocks shall be located below the shelves.

AC terminal blocks shall be Underwriter's Laboratory approved for 600 volts AC minimum and shall be suitable for outdoor use. Terminals used for field connections shall secure conductors by means of a #10-32 nickel or cadmium plated brass binder head screw. Terminals used for interwiring connections, but not for field connections, shall secure conductors by means of a #6-32 nickel or cadmium plated brass binder head screw.

As a minimum, all connections to and from the electronic equipment shall terminate to an interwiring type block. These blocks will act as intermediate connection points for all electronic equipment inputs and outputs.

All return and equipment grounding wiring shall terminate to the ground bus installed in the cabinet.

Surge Protection (non-solar continuous count applications only)

Protector and Cabinet Configuration

Communication cable pairs or other electronic equipment harnesses within the cabinet shall have surge protectors installed between the cable pairs and the equipment. The conductor leads and the surge protector leads shall be kept as short as possible with all conductor bends formed to the maximum possible radius. The protector units shall be located as near as possible to the entry point and as far as possible from any electrical equipment. The protector ground lead shall be made directly to the cabinet wall or ground plane.

The surge protectors utilized for AC power shall not dissipate any energy and shall not provide any series impedance during stand-by operation. The units shall return to non-shunting mode after the passage of any surge and shall not allow the shunting of AC power.

Power Line Surge Protector

ITEM 683.06010013 - TRAFFIC MONITORING CABINET

A power line surge protector shall be installed in each cabinet between the load side of the input power circuit breaker or fuse and ground. The surge protector shall have the following characteristics:

(a) Working Voltage

The unit shall be rated for operation on AC power lines with a voltage rating of 130 volts RMS and 184 volts peak or 275 volts RMS and 389 volts peak for nominal 115/240 VAC respectively.

(b) Surge Voltage

The unit shall limit the surge voltage applied to the equipment to 650 volts peak while conducting a peak surge current of at least 6000 amperes. The surge current shall be an unsymmetrical triangular wave (designated 8 x 20 microseconds) that requires 8 microseconds to reach the peak value and at 20 microseconds will have half the peak value.

(c) Energy Rating

The unit shall be capable of dissipating 50 joules of surge energy without damage to itself. The unit shall have a 15 watt power dissipation rating.

Cabinet Thermostat

For cabinets equipped with a cooling fan, a surge and transient noise suppressor in the form of a varistor shall be installed across the thermostat that is used to control the fan. The varistor shall have characteristics equal to or better than the following:

GE Model Number V15OLAIOA
Stetron 250NRO7-1
Siemens SIOK150

Cabinet Grounding

A solid copper ground bus bar shall be permanently affixed to the inside surface of a cabinet wall. The point of contact between the ground bus and cabinet wall shall have less than 1 ohm resistance. The copper ground bus bar shall have a minimum of 10 connector points, each capable of securing at least one #10 conductor. AC return and equipment ground wiring shall return to the ground bus bar. Where multiple bus bars are used, they shall be bonded to each other with

bare stranded #10 copper wire. When installed, the cabinets shall be grounded in accordance with sub-section 680-3.12 of the New York State Standard Specifications.

Mechanical

Size and Construction

The cabinets shall be clean-cut in design and appearance and have minimal internal dimensions as shown on the plans. The cabinet shall be pole or pedestal mounted. All parts of the cabinet shall be cleaned, smoothed, and free from flaws, cracks, dents, and other imperfections. The cabinet shall be rigidly constructed to provide vibration free and satisfactory operation of the field equipment when installed. The cabinets shall be dust and rain tight and capable of maintaining a dry internal condition when subject to rain and wind gusts.

Doors

All doors shall be securely gasketed to prevent the entrance of dust and moisture. The main door of the cabinet shall include substantially the full area of the front of the cabinet. The door shall be provided with a catch to hold the door open at 135 degrees, plus or minus 25 degrees. The catch shall hold the door securely open until released. Doors shall be hinged on the right-hand side with at least two aluminum hinges with stainless steel hinge pins. The hinges shall be crimped or welded to prevent removal of the hinge pins. The hinges shall be bolted to the cabinet housing in a manner that prevents unauthorized personnel from removing the door with commonly available tools.

Ventilation

The cabinet shall be furnished with a thermostatically controlled ventilation fan mounted with a rain-snow and insect tight housing for non-solar continuous count applications. The electric fan shall have a rated capacity of at least 200 cubic feet per minute. The louver area shall be of sufficient size to permit the free flow of air corresponding to the rated capacity of the associated cabinet fan. Filters shall be provided on all louvers. The fan and cabinet ventilation louvers shall be located with respect to each other so as to direct the bulk of the air flow throughout the entire cabinet and in particular over the field equipment units as approved by the Engineer. The thermostat shall be adjustable to turn on between 90 degrees and 120 degrees Fahrenheit.

Exterior Finish

The exterior on all equipment cabinets furnished shall be of bare, unpainted aluminum.

ITEM 683.06010013 - TRAFFIC MONITORING CABINET

Locks

The lock for the door shall be of the self-locking heavy duty (5) pin tumbler cylinder rim type. Locks shall be keyed identical to existing Traffic Monitoring cabinets as follows: grand master key 1-10D and master key #2. The cabinet shall be furnished with a 3 point positive locking door. One key shall be provided for each cabinet.

Shelves

Adjustable shelves shall be provided to hold the equipment specified on the plans. Shelf adjustment shall be 2 inch intervals in the vertical positions.

Mounting Hardware

The cabinet shall be furnished with mounting plates and other necessary hardware to mount the cabinet on a pole or foundation.

Panels

All panels shall be designed to mount in the cabinet on mounting studs. It shall not be necessary to remove the panel to replace any panel mounted equipment.

Connection of Lead-In Cable

Connection of loop and/or piezo detector lead-in cable to the detector unit terminal boards shall be accomplished in the following manner:

> Each cable shall be properly dressed into position in accordance with the approved lead-in cable position on the panel (cables shall be bundled together and broken out by their position on the terminal boards).
>
> The cable shield shall be brought as close to the terminal points as possible and grounded.

Connection of Miscellaneous Cables

Connection of any other wires required to complete connections of an operational system shall be accomplished in the following manner:

> All wiring shall be of such size to satisfy good engineering practices and meet the requirements of the National Electric Code. All wiring connected to terminal boards shall be identified by the use of insulated pre-printed sleeving slipped over

the wire before final attachment, or other suitable identification.

All wires shall be cut to proper length before assembly. No wire shall be doubled back to take up the slack. Wires shall be neatly laced into cables with nylon lacing or plastic straps. Cables shall be secured with suitable clamps.

All wires entering or leaving a field cabinet shall be terminated on their proper terminal boards.

Documentation

Each field cabinet shall be supplied with three (3) copies of the Final Cabinet Wiring Diagram. One (1) copy shall be placed in a clear plastic envelope and left in the cabinet. Two (2) copies shall be delivered to the Engineer.

Quality Assurance Provisions

The following water spray tests shall be performed on the empty cabinet:

Water shall be sprayed from a point directly overhead at an angle of 60 degrees from the vertical axis of the cabinet. This procedure shall be repeated for each of eight equally spaced positions around the cabinet for a period of not less than five minutes in each position. The water shall be sprayed using a domestic type sprinkling nozzle at a rate of not less than 1 gallon per minute per square foot of surface area. The cabinet shall then be inspected for leakage. Evidence of water leakage shall be cause for rejection.

A Manufacturers certification of successful completion of the water spray test and that the cabinet conforms to this specification, shall be the basis of acceptance of the cabinet. Separate submission of test cabinets shall not be required.

METHOD OF MEASUREMENT

Each cabinet will be measured as the number of complete units furnished and installed in accordance with the Contract Documents or as directed by the Engineer.

BASIS OF PAYMENT

The unit bid for each cabinet shall include the cost of furnishing all labor, materials, and equipment necessary to complete the work. Payment for cabinet grounding and equipment harnesses shall be included under the price bid for these items.

ITEM 683.07200610 - SINGLE MODE FIBER OPTIC TRUNK CABLE, 6 FIBERS
ITEM 683.07201210 - SINGLE MODE FIBER OPTIC TRUNK CABLE, 12 FIBERS
ITEM 683.07202410 - SINGLE MODE FIBER OPTIC TRUNK CABLE, 24 FIBERS
ITEM 683.07203610 - SINGLE MODE FIBER OPTIC TRUNK CABLE, 36 FIBERS
ITEM 683.07204810 - SINGLE MODE FIBER OPTIC TRUNK CABLE, 48 FIBERS
ITEM 683.07206010 - SINGLE MODE FIBER OPTIC TRUNK CABLE, 60 FIBERS
ITEM 683.07207210 - SINGLE MODE FIBER OPTIC TRUNK CABLE, 72 FIBERS
ITEM 683.07250010 - FIBER OPTIC DROP CABLE

DESCRIPTION:

This work shall consist of the furnishing and installation of fiber optic cables, passive components and miscellaneous equipment required for a complete cable plant in accordance with the contract documents and as directed by the Engineer.

MATERIALS

Equipment to be installed as part of these bid items include the following:

1. Single Mode Fiber Optic Cable
2. Fiber Optic Cable Connectors and Splices
3. Fiber Optic Splice Trays
4. Fiber Optic Splice Cases
5. Fiber Optic Breakout Kits

Other passive components that are required to form a complete communication system include (1) terminators and (2) moisture and water sealants and cable caps for below grade applications. The components supplied shall be commercially available components whose specifications indicate state-of-the-art capability for the application.

1. Single-mode Fiber Optic Trunk Cable

The single-mode fiber optic cable shall incorporate a water swellable tape and be of a loose buffer tube cable design as specified herein. The fiber optic cable shall be all dielectric suitable for conduit and aerial installation in an outside cable plant environment and for indoor cabling environments when installed in accordance with the current NEC and local building code requirements. All cable shall consist of the number of fibers specified in the contract documents.

The cable shall meet the requirements of the United States Department of Agriculture Rural Utility Service (RUS) 7 CFR1755.900 and the requirements of ANSI/ICEA Standard for Fiber Optic Outside Plant Communications Cable, ANSI/ICEA S-87-640-1999 at a minimum, and shall be new, unused and of current design and manufacture. The cable manufacturer shall have a minimum of three years experience in manufacturing fiber optic cable of similar design.

Optical Requirements

The fiber shall meet the requirements of EIA/TIA-492CAAA "Detail Specification for Class Iva

Dispersion-Unshifted Single-Mode Optical Fibers".

Attenuation: The nominal attenuation shall not exceed 0.4 dB/km at a wavelength of 1310 nm and and 0.3 dB/km at a wavelength of 1550 nm. Fiber attenuation shall be uniform with no discontinuities greater than 0.1 dB. The attenuation at 1383 ± 3 nm shall not exceed 2.1 dB/km. The attenuation measurements shall be in accordance with EIA/TIA Standards FOTP-20, 59, 61 and 78. The average change in attenuation at extreme operational temperatures (-40° F to 158° F) shall not exceed 0.05 dB/km at 1550 nm. The magnitude of the maximum attenuation change of each individual fiber shall not be greater than 0.15 dB/km at 1550 nm. The change in attenuation measurements shall in accordance with EIA/TIA Standard FOTP-3.

Cutoff Wavelength: Not to exceed 1250 nm.

Mode-Field Diameter:
9.30 ± 0.50 µm at 1310 nm.
10.50 ± 1.00 µm at 1550 nm.

Zero Dispersion Wavelength: 1312 nm ±10 nm.

Zero Dispersion Slope: Not to exceed 0.092 ps/(nm^2•km).

Polarization Mode Dispersion: Not to exceed 0.5 ps/$(km)^{½}$

Dispersion: Less than 3.5 ps/(nm•km) for 1285 nm through 1330 nm and less than 18 ps/(nm•km) at 1550 nm as measured in accordance with EIA/TIA Standard FOTP-169.

Mechanical Requirements

Fibers

All optical fibers shall be Corning glass fibers or approved equivalent. All fibers within a given cable shall be from the same manufacturer, and shall contain no factory splices. Each fiber shall conform to the following minimum requirements:

- Typical Core Diameter: 8.3 µm (0.327mil)
- Cladding Diameter: 25.0±1.0 µm (1 mil to 0.04mil)
- Core-to-Cladding Offset: Not to exceed 0.5 µm(0.02 mil)
- Cladding Non-Circularity: Not to exceed 1.0 %

Color Coating

ITEM 683.07200610 - SINGLE MODE FIBER OPTIC TRUNK CABLE, 6 FIBERS
ITEM 683.07201210 - SINGLE MODE FIBER OPTIC TRUNK CABLE, 12 FIBERS
ITEM 683.07202410 - SINGLE MODE FIBER OPTIC TRUNK CABLE, 24 FIBERS
ITEM 683.07203610 - SINGLE MODE FIBER OPTIC TRUNK CABLE, 36 FIBERS
ITEM 683.07204810 - SINGLE MODE FIBER OPTIC TRUNK CABLE, 48 FIBERS
ITEM 683.07206010 - SINGLE MODE FIBER OPTIC TRUNK CABLE, 60 FIBERS
ITEM 683.07207210 - SINGLE MODE FIBER OPTIC TRUNK CABLE, 72 FIBERS
ITEM 683.07250010 - FIBER OPTIC DROP CABLE

Each fiber shall have a color coating applied to it by the manufacturer. The coating shall not affect the optical characteristics of the fiber. The basic color configuration shall be as follows, in accordance with EIA/TIA-598-A:

1. Blue	4. Brown	7. Red	10. Violet	
2. Orange	5. Slate	8. Black	11. Rose	
3. Green	6. White	9. Yellow	12. Aqua	

The nominal colored fiber diameter shall be 250 µm.(10 mil).

Primary Coating

Each fiber shall have a dual layered, UV acrylate coating applied to it by the manufacturer. The coating shall be mechanically strippable without damaging the fiber. The coating diameter shall be 245±10 µm(10 mil±0.4 mil).

Central Strength Member: The strength member shall consist of a dielectric, glass-reinforced plastic rod.

Buffering

All fibers shall be enclosed in non-conductive loose buffer tubes. Each buffer tube shall contain up to twelve (12) fibers. The Contractor shall submit the fiber count per buffer tube and the buffer tube count configuration to the Engineer for approval. The fiber shall not adhere to the inside of the buffer tube. Each buffer tube containing fibers shall be color coded in a similar scheme as the fiber color. The basic color configuration shall be as follows, in accordance with EIA/TIA-598-A:

1. Blue	4. Brown	7. Red	10. Violet
2. Orange	5. Slate	8. Black	11. Rose
3. Green	6. White	9. Yellow	12. Aqua

In buffer tubes containing multiple fibers, the colors shall be stable during temperature cycling and not subject to fading or smearing onto each other or into the gel filling material. Colors shall not cause fibers to stick together. Buffer tubes shall be of dual-layer construction.

The buffer tubes shall be filled with a non-hygroscopic gel to prevent water and moisture penetration. The gel shall contain anti-oxidant additives, and the gel shall be readily removable with conventional solvents. The gel shall be non-toxic and dermatologically safe to exposed skin. It shall be chemically and mechanically compatible with all cable components, non-nutritive to fungus, non-hygroscopic and electrically non-conductive.

ITEM 683.07200610 - SINGLE MODE FIBER OPTIC TRUNK CABLE, 6 FIBERS
ITEM 683.07201210 - SINGLE MODE FIBER OPTIC TRUNK CABLE, 12 FIBERS
ITEM 683.07202410 - SINGLE MODE FIBER OPTIC TRUNK CABLE, 24 FIBERS
ITEM 683.07203610 - SINGLE MODE FIBER OPTIC TRUNK CABLE, 36 FIBERS
ITEM 683.07204810 - SINGLE MODE FIBER OPTIC TRUNK CABLE, 48 FIBERS
ITEM 683.07206010 - SINGLE MODE FIBER OPTIC TRUNK CABLE, 60 FIBERS
ITEM 683.07207210 - SINGLE MODE FIBER OPTIC TRUNK CABLE, 72 FIBERS
ITEM 683.07250010 - FIBER OPTIC DROP CABLE

Filler Rods: Filler rods shall be used to fill all unused buffer tubes, or shall be used instead of unused buffer tubes. The filler rod shall be a solid polyethylene material and shall be natural in color. The filler rods shall maintain the concentricity of the cable cross section where required.

Stranding: The buffer tubes shall be stranded around the central strength member using the reverse oscillarion (S-Z) stranding process. Water swellable yarns shall be applied longitudinally along the central member during stranding.

Water Swellable Tape: A water swellable tape shall be applied longitudinally over the stranded tubes/fillers. The water swellable tape shall be non-nutritive to fungus, electrically non-conductive and homogenous. It shall also be free from dirt and foreign matter.

Tensile Strength Provisions: Aramid yarn shall be helically stranded evenly around the cable core to provide tensile strength. The yarn shall enable the cable to withstand a maximum pulling force of 607 lbs during installation and 200 lbs long term installed without changing the characteristics of the optical fibers. Each length of cable shall have sufficient strength to be installed in continuous lengths as specified on the plans.

Outer Jacket:

A medium density polyethylene (or approved equal) outer jacket shall be applied over the entire cable assembly. The outer jacket shall have a minimum nominal jacket thickness of 1/16 inch. The polyethylene shall contain carbon black and shall not promote the growth of fungus. Jacketing material shall be applied directly over the strength members and the water swellable tape. The outer jacket shall contain no metallic elements and shall be of a consistent thickness.

The MDPE jacketet material shall be as defined in ASTM D1248, Type II, Class C and Grades J4, E7 and E8.

The jacket shall be marked in contrasting color at 2 feet intervals with the following information:

NYSDOT - INFORM FIBER OPTIC CABLE - XXX - YYZZ

where XXX shall equal the number of optical fibers in the cable and YYZZ shall be the month and year that the cable was manufactured. The height of the markings shall be approximately 3/32 inch.

In addition, the outer jacket shall have sequential meter markings as approved by the Engineer. The actual length of the cable shall be within -0% +1% of the length markings.

Ripcord: The cable shall contain a ripcord under the sheath to facilitate cable preparation.

ITEM 683.07200610 - SINGLE MODE FIBER OPTIC TRUNK CABLE, 6 FIBERS
ITEM 683.07201210 - SINGLE MODE FIBER OPTIC TRUNK CABLE, 12 FIBERS
ITEM 683.07202410 - SINGLE MODE FIBER OPTIC TRUNK CABLE, 24 FIBERS
ITEM 683.07203610 - SINGLE MODE FIBER OPTIC TRUNK CABLE, 36 FIBERS
ITEM 683.07204810 - SINGLE MODE FIBER OPTIC TRUNK CABLE, 48 FIBERS
ITEM 683.07206010 - SINGLE MODE FIBER OPTIC TRUNK CABLE, 60 FIBERS
ITEM 683.07207210 - SINGLE MODE FIBER OPTIC TRUNK CABLE, 72 FIBERS
ITEM 683.07250010 - FIBER OPTIC DROP CABLE

Bend Radius: The cable shall be capable of withstanding a minimum bending radius of ten (10) times its outer diameter during operation and fifteen (15) times its outer diameter during installation without changing the characteristics of the optical fibers.

Diameter: The outer diameter of the cable shall be less than 19/32 inch.

Other Requirements

Manufacturer's Certification: The cable manufacturer shall certify that each reel of cable furnished, meets or exceeds the following specifications:

Fluid Penetration: When a one meter static head of water or equivalent continuous pressure is applied at one end of a one meter length of filled cable for one hour, no water shall leak through the open cable end. The water penetration testing shall be performed in accordance with EIA/TIA Standard FOTP-82.

Filling Compound Flow: When tested in accordance with EIA/TIA Standard FOTP-81, the cable shall exhibit no flow (drip or leak) of filling or flooding compound at 158° F.

Compressive Strength: When tested in accordance with EIA/TIA Standard FOTP-41, the cable shall withstand a minimum compressive load of 126 lb/inch applied uniformly over the length of the sample and applied at the rate of 0.1 inch per minute. The load shall be maintained for a period of 1 minute and then decreased to 63 lb/in. The 63lb/in load shall be maintained for a period of 10 minutes. Attenuation measurements shall be performed before release of the 63 lb/in load. The change in attenuation shall not exceed 0.15 dB at 885lb/in.

Tensile Loading and Bending: When tested in accordance with EIA/TIA Standard FOTP-33, using a maximum mandrel and sheave diameter of 22 inch, the cable shall withstand a rated tensile load of 600 lbs and a residual load of 30% of the rated installation load. The axial fiber strain shall be ≤ 20% of the fiber proof level after completion of 10 minutes of conditioning and while the cable is under the residual load. The change in attenuation at residual load and after load removal shall not exceed 0.15 dB at 1550 nm.

Impact Resistance: When tested in accordance with EIA/TIA Standard FOTP-25 except that the number of cycles shall be two at three locations along a one meter cable length and the impact energy shall be at least 3.24lbf ft (in accordance with ICEA S-87-640), the change in attenuation shall not exceed 0.15 dB at 1550 nm.

Cable Flex: When tested in accordance with EIA/TIA Standard FOTP-104, the cable shall withstand 25 mechanical flexing cycles around a sheave diameter not greater than 20 times the cable diameter. The fibers shall not experience an attenuation change greater than 0.15 dB at 1550 nm. The cable jacket shall exhibit no cracking or splitting when observed under 5X magnification.

ITEM 683.07200610 - SINGLE MODE FIBER OPTIC TRUNK CABLE, 6 FIBERS
ITEM 683.07201210 - SINGLE MODE FIBER OPTIC TRUNK CABLE, 12 FIBERS
ITEM 683.07202410 - SINGLE MODE FIBER OPTIC TRUNK CABLE, 24 FIBERS
ITEM 683.07203610 - SINGLE MODE FIBER OPTIC TRUNK CABLE, 36 FIBERS
ITEM 683.07204810 - SINGLE MODE FIBER OPTIC TRUNK CABLE, 48 FIBERS
ITEM 683.07206010 - SINGLE MODE FIBER OPTIC TRUNK CABLE, 60 FIBERS
ITEM 683.07207210 - SINGLE MODE FIBER OPTIC TRUNK CABLE, 72 FIBERS
ITEM 683.07250010 - FIBER OPTIC DROP CABLE

Temperature Cycling: When tested in accordance with EIA/TIA Standard FOTP-3, the change in attenuation at extreme temperatures (-40°F to +158° F) shall not exceed 0.15 dB/km at 1550 nm.

Low or High Temperature Bending: When tested in accordance with EIA/TIA Standard FOTP-37, the cable shall withstand four full turns around a mandrel of ≤ 20 times the cable diameter for four hours at test temperatures of -22°F and +140°F. Neither the inner our outer surfaces of the jacket shall exhibit visible cracks, splits, tears or other openings. The fibers shall not exhibit a change in attenuation greater than 0.30 dB/km at 1550 nm.

Cable Twist: When tested in accordance with EIA/TIA Standard FOTP-85, a length of cable no longer than 6 ½ ft shall withstand 10 cycles of mechanical twisting. The fibers shall not experience an attenuation change greater than 0.1 dB at 1550 nm. The cable jacket shall exhibit no cracking or splitting when observed under 5X magnification.

2. Fiber Optic Drop Cable

Fiber optic drop cables shall be installed in conduit, between the mainline fiber optic backbone cable and equipment cabinets patch panels as shown on the plans. They shall be spliced to the appropriate fiber within approved splice cases in pullboxes adjacent to equipment cabinets as specified.

Optical Requirements: The fiber optic drop cables shall have identical optical characteristics as the single-mode fiber optic trunk cable specified above.

Material Requirements

The drop cable shall have the identical physical configuration as the single-mode fiber optic trunk cable specified above. The fiber optic drop cable shall contain twelve (12) or more fibers. The number of fibers per drop cable shall be selected to allow for a minimum of 50% spare for the drop location.

The drop cable shall be able to withstand a minimum of 100 lbs of pulling force during installation.

The Contractor shall submit the drop cable buffer tube count configuration and fiber count per buffer tube to the engineer for approval.

The individual fibers in each drop cable shall be unterminated on one end and have a factory installed ST connector on the other end. The unterminated end shall be fusion spliced to the appropriate mainline fiber in a splice case and the terminated end shall interface with the cabinet distribution rack specified under a separate contract item. The manufacturer shall factory test the cable assembly with connectors and provide results to the Engineer for approval prior to field installation.

The drop cable shall be of sufficient length to be installed as shown on the plans, with a minimum of 10

ft of slack provided on either end.

The Contractor shall follow the drop cable manufacturer's recommendation in the installation of the drop cables, including the individual breakout fibers.

3. Fiber Optic Connectors:

Fiber optic connectors shall be factory installed. Field installation of connectors shall only be permitted with the express consent of the Engineer and will be considered on a case by case basis. The connectors shall meet the following requirements:

- Type ST twist lock (bayonet).
- Uses ceramic ferrules
- Fiber secured within the ferrule with epoxy, as specified by the connector or epoxy manufacturer.
- Operating temperature: -4°F to +158°F
- Insertion loss: 0.5 dB maximum
- Return loss: 55 dB minimum

4. Splice Cases

The Contractor shall furnish and install fiber optic splice cases in locations where splices require protection. The typical location where they will be required is in pullboxes where the fiber optic trunk cable will be spliced to fiber optic drop cables. The splice cases shall meet the following minimum requirements:

- The case shall be constructed of a rigid, high strength plastic material. The case shall be waterproof with the appropriate gaskets and protection to provide moisture integrity. When installed, the case shall be capable of withstanding severe conditions of moisture, vibration, impact, cable stress and temperature extremes.
- The case shall be capable of holding the type of splice trays specified herein, for fusion and ribbon splices. The case shall have the capability of holding trays from various manufacturers. The basic case shall have the capacity to hold three (3) splice trays with 24 splices per tray.
- The basic case shall have the input/output capacity for 6 cables.
- The case shall be re-enterable without disturbing the fibers or the fiber splices. No special tools shall be required for installation of maintenance of the case. All hardware and miscellaneous parts shall be standard industry equipment.
- The splice case shall be mountable to standard U-shaped sign channels using stainless steel hardware, or manufacturer approved hardware. Mounting shall be as shown on the details.

ITEM 683.07200610 - SINGLE MODE FIBER OPTIC TRUNK CABLE, 6 FIBERS
ITEM 683.07201210 - SINGLE MODE FIBER OPTIC TRUNK CABLE, 12 FIBERS
ITEM 683.07202410 - SINGLE MODE FIBER OPTIC TRUNK CABLE, 24 FIBERS
ITEM 683.07203610 - SINGLE MODE FIBER OPTIC TRUNK CABLE, 36 FIBERS
ITEM 683.07204810 - SINGLE MODE FIBER OPTIC TRUNK CABLE, 48 FIBERS
ITEM 683.07206010 - SINGLE MODE FIBER OPTIC TRUNK CABLE, 60 FIBERS
ITEM 683.07207210 - SINGLE MODE FIBER OPTIC TRUNK CABLE, 72 FIBERS
ITEM 683.07250010 - FIBER OPTIC DROP CABLE

- Nominal dimensions of the basic case shall be 22 inch long by 9 inch wide by 9 inch high. The basic case shall weigh 20 lbs maximum.
- The splice case shall have a termination block to terminate the central strength members of the fiber optic cables.

5. Splice Trays

The Contractor shall furnish and install fiber optic splice trays to organize and store splices within splice cases. The trays shall be compatible with the fiber optic splices and splice cases specified herein and shall meet the following minimum requirements:

- The tray shall have the capacity for 24 splices. It shall be compatible with the fusion splices specified herein but shall also be adaptable to hold mechanical splices.
- The tray shall accommodate up to 8 loose tube buffers. No cable ties are to be used. The loose tube buffers shall be secured with a tube guide or channel snap.
- The tray shall accommodate both 250 micron and 900 micron fiber.
- Slack fiber within the tray shall be placed in an oval shape along an inside wall of the tray.
- The fiber optic splice trays shall be stackable within the splice case. Any tray within a stack shall be accessible without disassembly of any of the other trays.
- The nominal dimensions of the splice tray shall be 16 inch long by 4 ½ inch wide by ½ inch high.

6. Fiber Optic Breakout Kits

The fiber optic breakout kits contain all the tools and materials necessary to complete the installation of the fiber optic backbone and drop cables. It shall include, as a minimum, the following equipment:

- Pulling eyes with protective covering for the installation of preterminated fiber optic drop cable.
- Fiber optic installer test equipment, fusion splicers, test cables, connector adapters, inspection tools, attenuators, tracers, continuity checkers, consumables and all ancillary equipment.

Quality Assurance Provision

All optical fibers shall be proof tested by the fiber manufacturer at a minimum load of 100 ksi.

All optical fibers shall be attenuation tested. The attenuation of each fiber shall be provided to the Engineer with each reel of cable furnished.

The fiber optic cable shall conform to the following requirements:

ITEM 683.07200610 - SINGLE MODE FIBER OPTIC TRUNK CABLE, 6 FIBERS
ITEM 683.07201210 - SINGLE MODE FIBER OPTIC TRUNK CABLE, 12 FIBERS
ITEM 683.07202410 - SINGLE MODE FIBER OPTIC TRUNK CABLE, 24 FIBERS
ITEM 683.07203610 - SINGLE MODE FIBER OPTIC TRUNK CABLE, 36 FIBERS
ITEM 683.07204810 - SINGLE MODE FIBER OPTIC TRUNK CABLE, 48 FIBERS
ITEM 683.07206010 - SINGLE MODE FIBER OPTIC TRUNK CABLE, 60 FIBERS
ITEM 683.07207210 - SINGLE MODE FIBER OPTIC TRUNK CABLE, 72 FIBERS
ITEM 683.07250010 - FIBER OPTIC DROP CABLE

Environmental Requirements

The cable shall function within specifications over the following temperature ranges:

- Shipping/Storage: -58°F to 158°F
- Installation: -22°F to 158°F
- Operation: -40°F to 158°F

CONSTRUCTION DETAILS:

All fiber optic cable will be installed in innerduct placed in steel conduit, steel conduit, lashed to or messenger cable, or overlashed to existing cables as indicated in these contract documents or otherwise directed by the Engineer. All fibers in the fiber optic cable shall be spliced and/or terminated in designated field cabinets or pullboxes only.

Prior to the installation of the fiber optic cable the Contractor shall submit his proposed cable plant design to the Engineer for approval. No cable shall be installed until the proposed cable plant design submission is approved by the Engineer. The cable plant design shall include the following:

- Catalog cuts and shop drawings for all cable, connectors, splice equipment, splice enclosures, splice trays and cable installation and test equipment.
- Preliminary locations of all proposed splices.
- Proposed pullbox locations where hand assists or intermediate assist winches will be required during installation.
- Proof of the experience requirements as defined in this special specification.
- Cable manufacturer's recommended cable installation techniques, both in conduit and overlashed to messenger or existing cable, such that the optical and mechanical properties of the cables are not degraded at the time of installation. The proposed recommendations shall include the following:
  - Cable manufacture's approved pulling lubricant for use on the cable and method of application. No other lubricants will be permitted.
  - Installation set-up including size and types of rollers, feeder guides, tension gauge make and model number, attachment of pulling jig to jacket and direction of pull.
  - Method to overlash the cables to existing cables including spacing of drip loops, lashing material, slack cable storage.
  - Maximum pulling tensions, which shall specify both pulling from the cable's conductors and for pulling from the cable's outer jacket.

- Minimum bend radii, which shall specify a radius both loaded and unloaded.
- Method to install multiple cables.

The cable plant design shall be submitted at the Milestone specified in the Special Note of the Contract Documents.

Experience Requirements

Personnel involved in the installation, splicing and testing of the fiber optic cable shall meet the following requirements:

- A minimum of seven (7) years experience in the installation of fiber optic cables, including fusion splicing, terminating and testing single mode fibers.
- Five (5) installed systems where fiber optic cables are installed in outdoor conduits and aerial plants and the systems are in continuous satisfactory operation for at least two (2) years. The Contractor shall submit as proof, photographs or other supporting documents, and the names, addresses and telephone numbers of the operating personnel who can be contacted regarding the fiber optic systems.
- One (1) fiber optic cable system (which may be one of the five in the preceding paragraph) which the Contractor can arrange for inspection and demonstration to INFORM representatives and the Engineer. Test records for the system including cable and splice loss shall be furnished for examination by the Engineer. A system splice enclosure and a patch panel selected at random by the Engineer shall be opened by the Contractor for inspection of workmanship. All inspection activities shall be approved in writing by the system owner prior to actual field inspection.
- Splicers shall have been trained and certified by the manufacturer of the fiber splice material to be used, in fiber optic splicing procedures. Proof of this training must be submitted to the Engineer for approval.
- Installers shall have been trained and certified by the manufacturer of the fiber optic cable to be used, in fiber optic cable installation and handling procedures. Proof of this training must be submitted to the Engineer for approval.
- Personnel involved in testing shall have been trained and certified by the manufacturer of the fiber optic cable test equipment to be used, in fiber optic cable testing procedures. Proof of this training must be submitted to the Engineer for approval.

Slack Cable Storage

Slack cable shall be stored underground on approved racks in fiber optic pullboxes, at grade in equipment

cabinets, and overhead on pairs of approved cable snowshoes. Quantity of slack cable to be stored shall be as indicated in the contract documents and as approved by the Engineer.

Splicing Requirements

All optical fibers shall be spliced to provide continuous runs. Splices shall be allowed only at locations designated in the approved cable plant layout or as approved by the Engineer. All splices shall be performed in a controlled, clean environment such as a Contractor designated splicing truck/or van.

The splices shall meet the following requirements:

a. All splices shall use the fusion technique. Fusion splicing equipment shall be provided by the Contractor and shall be cleaned, calibrated and specifically adjusted to the fiber and environmental conditions at the start of each shift. Splice enclosures, tools and procedures, shall be approved by the cable manufacturer as being compatible with the cable type being delivered.

b. Only buffered tubes containing fibers to be spliced shall be opened. The other tubes shall be neatly looped and stored in the enclosure.

c. Each spliced fiber shall be packaged in a protective sleeving or housing. Bare fibers shall be completely re-coated with a protective RTV, gel or similar substance, prior to application of the sleeve or housing, so as to protect the fiber from scoring, dirt or microbending.

d. Rack mounted organizer trays shall be used to hold the spliced fibers, with each fiber neatly secured to the tray.

e. Splice loss shall not exceed a mean of 0.1 dB per link. A link is defined as the fiber optic path between two active components. No splice loss shall exceed 0.15 dB. If a splice is measured to exceed 0.15 dB during the splicing process, it shall be remade until its loss falls below 0.15 dB or the Engineer waives the 0.15 dB requirement. Each attempt shall be recorded for purposes of acceptance. If the mean exceeds 0.1 dB in any link, splices in the link shall be remade until the mean loss does not exceed 0.1 dB

f. All splice losses shall be recorded in tabular form and submitted to the Engineer in paper and electronic formats for approval. If an optical time domain reflectometer (OTDR) is used to record splice loss, chart recordings of the "signature" shall be submitted with the splice data with a record of all OTDR settings and the OTDR locations written on the trace.

Installation

Fiber optic cable shall be installed in accordance with the approved manufacturer's recommendations. In addition the following requirements shall be met:

a. The number of pullboxes and their locations shall be as shown on the Contract Documents. The

Contractor may be required to install the cable one pullbox at a time. The direction of the cable pull shall be determined by the Contractor and shall require the approval of the Engineer.

b. A minimum of 30 ft of cable slack, or as approved by the Engineer, shall be provided in pullboxes containing splices or otherwise designated on the Contract Documents or as directed by the Engineer. Additional slack, as indicated on the approved cable installation plan, may be provided for closure preparation and splicing.

c. No fiber optic cable shall be pulled through more than one 90 degree bend unless so indicated on the approved Contract Documents or specifically approved by the Engineer.

d. The cable shall not be pulled over edges or corners, over or around obstructions, or through unnecessary curves or bends.

e. The cable shall be looped in and out of cabinets and pull boxes to provide adequate slack and the least amount of stress on the fibers. The Contractor shall ensure that the cable is not damaged during storage or installation.

f. Fiber optic cable ends shall be kept sealed at all times during installation, using a method recommended by the cable manufacturer and approved by the Engineer. The cable end shall remain sealed until the Contractor terminates the fiber cables. Cables that are not immediately terminated shall have a minimum of 6 ½ ft of slack.

g. When using lubricants, the Contractor shall adhere to the cable manufacturer's requirements for the proper amount, application tools and method, and removal of the lubricant from the exposed cable.

h. Optical fiber cable shall be installed in continuous lengths without intermediate splices throughout the project except where splices are indicated on the Contract Documents or approved by the Engineer. Splices shall only be in reenterable splice enclosures mounted in pullboxes, junction boxes and underground vaults.

i. The fiber optic drop cable shall be spliced to either the backbone or distribution cable at the locations indicated in the Contract Documents or as directed by the Engineer.

j. The maximum pulling tensions and minimum bending radii shall not be violated at any time during installation. The Contractor shall consult with the Engineer concerning existing conduit, pull boxes, and risers, which could force the violation of the minimum bending radius for the fiber optic cable. The Contractor shall obtain approval from the Engineer if modifications to these existing facilities are required. Violation of these parameters shall be cause for rejection of the installed cable.

k. Prior to any installation of cable, the Contractor shall clean existing conduit in accordance with the requirements of these special provisions.

l. Prior to overlashing cable, the Contractor shall inspect the existing aerial cable plant and report any deficiencies that may hinder the proper installation of the new cable to the Engineer who will

determine, what, if any, action should be taken.

m. Slack cable and innerduct where pulled through a pullbox shall be racked to the pullbox wall.

Splicing Requirements

a. All optical fibers shall be spliced to provide continuous runs.
b. Prior to splicing the Contractor shall test each fiber of the installed cable for continuity, anomalies (events above 0.3 dB) and attenuation using an Optical Time Domain Reflectometer (OTDR) at wavelengths of 1310 nm and 1550 nm.
c. Only the fibers designated for splicing shall be spliced. All other fibers shall be routed through the splice enclosure with at least 1 ft of slack left within the enclosure. Only buffer tubes containing fibers to be spliced shall be opened.
d. Splices shall be made only at locations designated in the approved cable plant layout or as approved by the Engineer.
e. Where two backbone cables are routed in the same duct bank, both cables shall not be spliced in the same pull box.

Termination Requirements

The connector loss for complete connection to the terminal equipment shall not exceed a mean of 0.5 dB. No connector losses above 1.0 dB shall be permitted.

Unused optical fibers shall be properly protected with sealed end caps.

Documentation Requirements

Ten (10) complete sets of operation and maintenance manuals shall be provided. The manuals shall, as a minimum, include the following:

- Complete and accurate as-built schematic diagrams showing the fiber optic cable plant and locations of all splices.
- Complete performance data of the cable plant showing the losses at each splice joint and each terminal connector.
- Installation, splicing, terminating and testing procedures.
- Complete parts list including names of vendors.
- Complete maintenance and trouble-shooting procedures.
- One (1) month prior to installation, ten (10) copies of the Contractors Installation Practices shall be submitted for approval. This shall include practices, list of installation equipment, and splicing

and test equipment. Field quality control procedures shall be detailed as well as procedures for corrective action.

Testing Requirements

The following tests shall be conducted. All tests shall conducted in accordance with approved test procedures. The Contractor shall submit test procedures and forms in paper and electronic formats for approval to the Engineer.

Existing Fiber Cable Verification Test: Prior to splicing fibers installed under this contract to existing fibers (where designated in the plans), the Contractor shall verify the loss characteristics of the existing fiber. Any anomalies shall be reported to the Engineer.

Pre-Installation Tests

The fiber optic cable shall be inspected and tested at the site storage area prior to installation.

Proper fiber cladding and fiber tube colors shall be verified by visual inspection. Any difference discovered from approved fiber optic cable plant layout or approved catalogue cut sheets for the cable shall be grounds for rejection of the cable.

Each optical fiber in the cable shall be tested from one end with an OTDR compatible with wavelength and fiber type. Testing shall check for continuity, length, anomalies, and approximate attenuation at both 1310nm and 1550nm wavelengths. Each measurement shall be recorded with color, location and type of fiber measure. In the event that a meaningful measurement cannot be made from one end, it shall be performed from the opposite end of that fiber.

Post-Installation Tests

Pre-splice and Post-splice testing shall be performed as follows:

Pre-Splice Testing

After installation and prior to splicing or terminating each optical fiber in the cable shall be tested again for the loss characteristics at both 1310nm and 1550nm wavelengths. Both directions of operation of the fiber shall be tested.

Post-splice Testing

After each splice and connector installation, each optical fiber span including all black/spare fibers shall undergo the following tests after installation of all connectors and splices. A span is defined as a

ITEM 683.07200610 - SINGLE MODE FIBER OPTIC TRUNK CABLE, 6 FIBERS
ITEM 683.07201210 - SINGLE MODE FIBER OPTIC TRUNK CABLE, 12 FIBERS
ITEM 683.07202410 - SINGLE MODE FIBER OPTIC TRUNK CABLE, 24 FIBERS
ITEM 683.07203610 - SINGLE MODE FIBER OPTIC TRUNK CABLE, 36 FIBERS
ITEM 683.07204810 - SINGLE MODE FIBER OPTIC TRUNK CABLE, 48 FIBERS
ITEM 683.07206010 - SINGLE MODE FIBER OPTIC TRUNK CABLE, 60 FIBERS
ITEM 683.07207210 - SINGLE MODE FIBER OPTIC TRUNK CABLE, 72 FIBERS
ITEM 683.07250010 - FIBER OPTIC DROP CABLE

continuous length of fiber including all splices and connectors:

- Using an OTDR test each span at 1310 nm and 1550 for fiber attenuation, continuity, length, and anomalies. Each optical fiber shall meet the following acceptance criteria:
  - Attenuation: Not to exceed 0.4 dB/km + 0.1 dB/splice + 0.5 dB/connector. The number of splices and cable attenuation shall be based upon the approved cable plant layout.
  - Anomalies: No event shall exceed 0.3 dB. If any event is detected that value, the contractor shall repair or replace that section of cable.
- Using an optical source and a power meter measure the attenuation from both ends. The measured attenuation shall be meet the criteria defined for the attenuation using the OTDR.

All cable that fails to meet the aforementioned requirements shall be replaced.

The Contractor shall submit to the Engineer a tabulated list of fibers and the actual end-to-end measured values from the above tests and all traces and loss length printouts.

Each fiber shall be listed according to the color code and span. This test data shall be the basis of acceptance for the fiber.

For optical fibers spliced to existing fibers this test shall be repeated between the control center and the field termination after the new and existing fibers have been spliced together. If a fiber fails to meet the loss characteristics for the spliced section fiber, the Contractor shall determine whether the excessive loss is the result of an anomaly in the new section of fiber, splice or existing section of fiber. The Contractor will not be responsible for repairing the existing fiber. The Contractor shall, however, be responsible for the new section of fiber and the splice between the two sections.

METHOD OF MEASUREMENT:

The fiber optic cable will be measured for payment as the number of linear feet of each size actually furnished and installed in accordance with the contract documents.

ITEM 683.07200610 - SINGLE MODE FIBER OPTIC TRUNK CABLE, 6 FIBERS
ITEM 683.07201210 - SINGLE MODE FIBER OPTIC TRUNK CABLE, 12 FIBERS
ITEM 683.07202410 - SINGLE MODE FIBER OPTIC TRUNK CABLE, 24 FIBERS
ITEM 683.07203610 - SINGLE MODE FIBER OPTIC TRUNK CABLE, 36 FIBERS
ITEM 683.07204810 - SINGLE MODE FIBER OPTIC TRUNK CABLE, 48 FIBERS
ITEM 683.07206010 - SINGLE MODE FIBER OPTIC TRUNK CABLE, 60 FIBERS
ITEM 683.07207210 - SINGLE MODE FIBER OPTIC TRUNK CABLE, 72 FIBERS
ITEM 683.07250010 - FIBER OPTIC DROP CABLE

BASIS OF PAYMENT:

The unit price bid per foot for Single Mode Fiber Optic Trunk Cable and Fiber Optic Drop Cable shall include the cost of furnishing all labor, material, tools and equipment and testing of the fiber optic cable to complete the work. The cost of furnishing and installing all passive components shall be incidental to and included in the pay item for fiber optic cable. All splicing, including set-up and individual terminations and connectors shall also be included in the pay item for fiber optic cable. All cable racks, snowshoes and other miscellaneous hardware necessary for slack cable storage shall also be included in the pay item for fiber optic cable.

Progress payment will be made as follows:

- Sixty percent of the bid price of the completed cable plant will be paid upon completion of installation and satisfactory completion of the post-installation tests.
- Twenty-five percent of the bid price will be paid upon satisfactory completion of all subsystem tests as described in the Special Provisions.
- Fifteen percent of the bid price will be paid upon satisfactory completion of Final System Acceptance.

ITEM: 683.10110008 - HD IP CAMERA ASSEMBLY - BARREL TYPE
ITEM: 683.10120008 - HD IP CAMERA ASSEMBLY - DOME TYPE
ITEM: 683.10130008 - HD IP CAMERA ASSEMBLY - SOLAR POWERED DOME TYPE

DESCRIPTION:

This work shall consist of furnishing and installing HD IP Camera Assemblies at the locations shown in the plans and as directed by the Engineer. These Camera assemblies shall contain all of the accessories, cables, components, software/ licenses and support documents described in the material specification and shall be configured as indicated on the contract document.

The HD IP Camera Assemblies shall have full HD 1080p30 image resolution with integral 30x optical zoom lens. The camera operation shall include true day-night with variable speed pan and tilt technology with a minimum sensitivity of 0.025 lux @30 IRE. The HD IP Camera Assemblies shall provide 3 or more independent output video streams configurable for H.264 and MJPEG outputs.

MATERIALS:

All materials furnished, assembled, fabricated, or installed shall be new, corrosion resistant, and in strict accordance with the standards set by the New York State Department of Transportation (NYSDOT). Each of the HD IP CCTV Camera Assembly types shall deliver high quality full-motion video during day or night operation with the video and control/status data transmitted over a communications network.

The HD IP Camera Assembly shall contain the Camera optics, Sensor, H.264/MJPEG Encoder, and Pan/Tilt/Zoom motor as an integrated unit. External connections to the camera shall include power over Ethernet (PoE) injector for digital video and IP based controls. An alternative 24 VAC power supply shall also be included.

Each type of CCTV Camera Assembly shall consist of a solid state color/monochrome CCTV camera with infra-red cut filter, motorized zoom lens, pressurized enclosure, pan/tilt unit, integral camera control receiver, and all cabling required to interface the HD IP CCTV Camera Assembly with equipment in the field cabinet.

The HD IP CCTV Camera mounting shall be furnished and installed for mounting on poles or walls as shown in the plans and as directed by the Engineer. Connections between the equipment shall be through water proof connectors. The connectors and cables shall be reviewed and approved by the regional TMC prior furnishing.

Repair, replacement, and parts service for the HD IP CCTV Camera Assembly shall be available within the contiguous United States or Canada. The Barrel, Dome and Solar Powered Dome Type CCTV Camera Assemblies shall be compliant with the latest version of the NTCIP Standards, as defined by AASHTO, ITE, and NEMA.

The assembly shall include "pre-set" capability, which shall allow the camera to be automatically commanded to a predefined position via the camera control software supplied under this specification. The Contractor shall provide a totally operational assembly with all cabling and terminations matched to support the selected components.

HD IP Camera Requirements:

The Barrel Type HD IP CCTV Camera Assembly, Dome Type HD IP CCTV Camera Assembly,

and Solar Powered Dome Type HD IP CCTV Camera Assembly shall meet the following minimum requirements:

General

Weight:

- Barrel: 30 pounds (max)
- Dome: 16 pounds (max)
- Solar Powered Dome: 16 pounds (max)

- Dimensions
  - Barrel: 16.5 inches (w) x 13 inches (h) x 14 inches (L) (max)
  - Dome: 12.25 (w) x 14 inches (h) (max)
  - Solar Powered Dome: 12.25 (w) x 14 inches (h) (max)
- Temperature Range -30 degrees F to +160 degrees F (operating)
- Humidity 0 – 100% relative humidity
- Wind meets all performance criteria when subjected to a 75 mph wind and able to withstand a 125 mph wind.
- Holding Torque: Maintains current position in winds of 75 MPH or higher with TS2 vibration conditions. Operates and moves to any position in winds of 75 MPH or higher at worst case orientation to the wind.
- Power Feed: PoE++ shall be provided as part of this item and mounted in the equipment cabinet. The Cabinet is provided as part of another pay item.
- Power Consumption:
  - Barrel: 100 W (max) including heater/defogger
  - Dome: 70 W (max) including heater/defogger
  - Solar Powered Dome: 30 W (max) including heater/defogger
- Network and Electrical Interfaces
  - Outdoor Rated Cat. 6 Cable
  - Alternate Power and control cables between the CCTV Camera Assembly and the associated field cabinet shall be in accordance with the manufacturer's recommendations. Shop drawings showing the configuration of the harness along with the manufacturer's recommendations shall be submitted to the Engineer for approval prior to fabrication.
  - Electrical connections between the positioning device and camera/lens shall be through a pre-wired feed-through rather than through a wiring harness.
- Enclosure:
  - Barrel: IP67/ NEMA Rating 4X
  - Barrel sunshield extends beyond viewing window to prevent sun glare on the lens
  - Dome: IP67/ NEMA Rating 4X

  - Solar Powered Dome: IP67/ NEMA Rating 4X
  - Enclosure: All hardware shall be stainless steel.
  - Enclosure Pressure: Enclosure shall be factory pressurized to prevent the ingress of water, dust and windblown particles, per the requirements of the NEMA rating. The IP67 rated enclosure shall be warranted for the lifetime of product against any moisture ingress.
  - The manufacture IP67/NEMA 4X certificate of compliance or testing result shall be submitted as requested by the Engineer.

- Heater/defroster/defogger: A built in thermostatically controlled heater/defroster/defogger shall be provided, if the operation of the camera at specific environment range required heater/ defroster/defogger. The defroster/defogger shall prevent icing and fogging of the viewing window. The heater shall be sized and thermostat set to permit operation of the camera over the specified environmental conditions. A minimum of 40° F hysteresis shall be provided in the thermostat to prevent continuous cycling of the heater, blower, defroster or defogger. Either snubbers or Metal Oxide Varistors (MOV) of appropriate ratings shall be installed across the switch outputs of all thermostats. The MOVs shall be connected to ground.

- Display Text Labels:
  - Label texts shall be positioned such that they do not interfere with the view.
  - Labels text shall be able to be disabled as necessary.
  - Label Information: Camera ID 20 alphanumeric characters (min)
  - Label Information: Preset ID
  - Label Information: Low/High Temperature
  - Label Information: Low/High Pressure (As direction of the Engineer this label may not require if the manufacture of the camera warranties for life of camera that no moisture will ingress into its IP67 enclosure)

Camera

- Image Sensor: 1/2.8” CMOS, Scanning Progressive
- Resolution 1,920 x 1,080
- Frame Rate 30 fps
- Camera Format Day/Night (IR Cut Filter)
- Day/Night Modes Auto, Color, B/W
- Color Sensitivity at 33 ms and f1.4: 0.4 lux (0.04 fc) or better
- B/W Sensitivity at 33 ms and f1.6: 0.04 lux (0.004 fc) or better
- Color Sensitivity at 500 ms and f1.4: 0.025 lux (0.0025 fc)or better
- B/W Sensitivity at 500 ms and f1.6: 0.0025 lux (0.00025fc)or better
- Zoom Lens: 30x, 4.4 to 132mm (Minimum)
- Typical Aperture: f1.4 -> f4.6
- Horizontal Angle of View: Minimum 63.4° to 2.3°
- Focus: Auto/Manual (Near, Far)
- Focus Search: Normal, Bright, Point Source
- Focus Sensitivity: Low, Normal, High

- Iris: Auto/Manual(Open/Close)
- Digital Zoom: 12x, Off/On (Depth)
- A Defog Mode Function/ Analytics: Off/Auto with user configuration setting/Manual with defog and haze enhancement Levels,
- Image Stabilization Mode Function: Off/On Level adjustment
- Enhanced Intensity Function: Off, Enhanced, Whiteout Reduction Level adjustment
- Dynamic Range Function: Gretter than 90dB in Normal/Combo/Contrast Level adjustment
- Back Light Comp Function: Off/On Level Setting
- Auto Electronic Shutter (AES): Auto/Manual, range 1/2 -> 1/30,000 or as approved by the Engineer
- Slow Shutter Off/On, range 1/15->1/2 or as approved by the Engineer
- IR Correction: Off/On [850nm]
- White Balance: Auto/Manual
- (WB) Modes Normal, Mercury, Sodium Vapor
- Automated Gain Control (AGC): Adjustable 1 to 48db or as approved by the Engineer
- Sharpness Soft, Normal, Sharp, Sharpest
- Noise Reduction: Normal, Medium, Strong, Fixed Levels

Camera PTZ

- Barrel Type Camera
  - Pan Range: 360° continuous rotation
  - Tilt Range: +90° to -90°
  - Manual Pan Speed: 0.05° to 45°/second
  - Manual Tilt Speed: 0.05° to 45°/second
  - Speed Resolution: 16 or 64 Variable Speed Levels
  - Preset Speed: 180° < 2.5 Seconds
  - Accuracy: +/- 0.05°
  - Resolution: +/- 0.05°
  - Presets: 512, Includes pan, tilt, zoom, focus, and preset ID, I/O output state
  - Tours: 512, Includes presets with dwell, speed, and direction and recurrence properties
  - Auto Park: Returns to a preset or tour after timer expires,
  - Privacy Masks: Minimum 8/16 – user defined mask area
  - Firmware Updating: Via Ethernet connection

- Dome Type Camera
  - Pan Range: 360° continuous rotation
  - Tilt Range: +10° to -90°
  - Pan Speed: 0.1° to 45°/second
  - Tilt Speed: 0.1° to 45°/second
  - Speed Resolution: Greater than 64 Variable speed levels
  - Preset Speed: 180° movement on less than 1.5 Seconds
  - Repeatability: +/- 0.1°
  - Resolution: +/- 0.1°

- Presets: 512, Includes pan, tilt, zoom, focus, preset ID, I/O output state
- Tours: 512, Includes presets with dwell, speed, and direction and recurrence properties
- Auto Park: Returns to a preset or tour after timer expires,
- Privacy Masks: Minimum 8/16 – user defined mask area
- Firmware Updating: Via Ethernet connection

- Solar Powered Dome Type Camera
  - Pan Range: 360° continuous rotation
  - Tilt Range: +10° to -90°
  - Pan Speed: 0.1° to 45°/second
  - Tilt Speed: 0.1° to 45°/second
  - Speed Resolution: Greater than 64 Variable speed levels
  - Preset Speed: 180° movement on less than 1.5 Seconds
  - Repeatability: +/- 0.1°
  - Resolution: +/- 0.1°
  - Presets: 512, Includes pan, tilt, zoom, focus, preset ID, I/O output state
  - Tours: 512, Includes presets with dwell, speed, and direction and recurrence properties
  - Auto Park: Returns to a preset or tour after timer expires,
  - Privacy Masks: Minimum 8/16 – user defined mask area
  - Firmware Updating: Via Ethernet connection

Video Streams

- Video Streams: Minimum three video streams
- Video Encoding: H.264 Base, Main and High Profiles, MJPEG
- Video Protocols: RTSP/RTP, RTSP Interleave, HTTP Tunneling, RTP Multicast
- Video Resolution: 1080p, 720p, D1, CIF, QCIF
- Video Frame Rate: 1 to 30, 30 default
- Video Data Rate: 256Kbs to 8Mbs
- Video Rate Control: Variable or Constant Bit Rate
- Video Latency for Four frames base: 0.133 sec. or better
- Video Transmission: 99.999% error free or better

Network Interfaces

- Ethernet: 802.3u 100Base-T, MDI-X auto-sensing, full duplex
- Digital Inputs: Minimum two (2) Sensor Inputs, Dry contact, N.O or N.C
- Digital Outputs: Minimum two (2) Control Output, Open collector
- Protocol: TCP, UDP, IPv4, IGMP, ICMP, DNS, DHCP, RTP, RTSP, RTCP, NTP, HTTP, SOAP, HTTPS ARP, FTP, SMTP, Telnet. ONVIF Profile S
- Media Players: VLC, Quick Time, Compliant media player with RFC 2326, 3984, 3550, 2435, ISO/ IEC 13818-1
- ONVIF: Profile S
- Camera Control: NTCIP, ONVIF Profile S
- Security: Admin, Operator User, Anonymous User, Digest Authentication Levels

- Updates File: Over network using camera web server interface

Certifications

- FCC Class A
- CE
- RoHS
- NTCIP
- ONVIF Profile S

To ensure compatibility and interchangeability with equipment furnished in previous and future contracts, the Barrel, Dome, and Solar Powered Dome Type HD IP CCTV Camera Assemblies shall be compliant with the latest version of the NTCIP Standards, as defined by AASHTO, ITE, and NEMA. The following conformance groups within the NTCIP 1205:2001 standard shall be supported with the values defined in these tables. For the purposes of this specification NTCIP 1205 Conformance Statements shall be considered mandatory, except where noted.

CONFORMANCE STATEMENTS

Object or Table Name	Reference	Conformance Requirement Within the Group
Configuration	NTCIP 1201:1996	Mandatory
Database Management	NTCIP 1201:1996	Amendment 1 Optional
Time Management	NTCIP 1201:1996	Amendment 1 Optional
CCTV Configuration	NTCIP 1205	Mandatory
Extended Functions	NTCIP 1205	Mandatory
Motion Control	NTCIP 1205	Mandatory
On-Screen Menu Control	NTCIP 1205	Optional

CCTV Configuration Conformance Group

MIB	Object or Table Name	NTCIP Reference	NYSDOT Specification Section Reference	Expected Valve
3.2.1	RangeMaximumPreset	NTCIP 1205	**3.2**	32 to 255
3.2.2	rangePanLeftLimit	NTCIP 1205	3.4	35999
3.2.3	rangePanRightLimit	NTCIP 1205	3.4	35999
3.2.4	rangePanHomePosition	NTCIP 1205	**3.5**	**0**
3.2.5	trueNorthOffset	NTCIP 1205	**3.5**	**0**
3.2.6	rangeTiltUpLimit	NTCIP 1205	**3.4.1 (Positioner)**	**9000**
			3.4.2 (dome)	**1000**
3.2.7	rangeTiltDownLimit	NTCIP 1205	**3.4.1**	**27000** **27000**
			3.4.2	**27000**
3.2.8	rangeZoomLimit	NTCIP 1205	**2.6**	65535
3.2.9	rangeFocusLimit	NTCIP 1205	**2.7**	65535
3.2.10	rangeIrisLimit	NTCIP 1205	**2.8**	65535

MIB	Object or Table Name	NTCIP Reference	NYSDOT Specification Section Reference	Expected Valve
3.2.11	rangeMinimumPanStepAngle	NTCIP 1205	**3.4**	5
3.2.12	rangeMinimumTiltStepAngle	NTCIP 1205	3.4	5
3.3.1	timeoutPan	NTCIP 1205	-	0-65535
3.3.2	timeoutTilt	NTCIP 1205	-	0-65535
3.3.3	timeoutZoom	NTCIP 1205	-	0-65535
3.3.4	timeoutFocus	NTCIP 1205	-	0-65535
3.3.5	timeoutIris	NTCIP 1205	-	0-65535
3.11.1	labelMaximum	NTCIP 1205	**3.6**	9..255
3.11.2	labelTable	NTCIP 1205	**3.6**	
3.11.2	labelEntry	NTCIP 1205	**3.6**	
3.11.2.1	labelIndex	NTCIP 1205	**3.6**	0..255
3.11.2.2	labelText	NTCIP 1205	**3.6**	0..255
3.11.2.3	labelFontType	NTCIP 1205	**3.6**	1
3.11.2.4	labelHeight	NTCIP 1205	**3.6**	0..255
3.11.2.5	labelColor	NTCIP 1205	**3.6**	0
3.11.2.6	labelStartRow	NTCIP 1205	**3.6**	0..255
3.11.2.7	labelStartColumn	NTCIP 1205	**3.6**	0..255
3.11.2.8	labelStatus	NTCIP 1205	**3.6**	Bit 7 = 0,1 Bit 6 = 0,1
3.11.3	labelLocationLabel	NTCIP 1205	**3.6**	0..255
3.11.4	labelEnableTextDisplay	NTCIP 1205	**3.6**	Bit 7 = ON

Extended Functions Conformance Group

MIB	Object Or Table Name	NTCIP Reference	NYSDOT Specification Section Reference	Expected Value
3.6.1	systemCameraFeatureControl	NTCIP 1205	1.6, 3.7	Byte 1 Bit 7 = 0,1 Bit 6 = 0,1 Bit 5 = 0 Bit 4 = 0 Bit 3 = 0 Byte 2 Bit 7 = 1

ITEM: 683.10110008 - HD IP CAMERA ASSEMBLY - BARREL TYPE
ITEM: 683.10120008 - HD IP CAMERA ASSEMBLY - DOME TYPE
ITEM: 683.10130008 - HD IP CAMERA ASSEMBLY - SOLAR POWERED DOME TYPE

MIB	Object Or Table Name	NTCIP Reference	NYSDOT Specification Section Reference	Expected Value
3.6.2	systemCameraFeatureStatus	NTCIP 1205	1.6, 3.7	Byte 1 Bit 7 = 0 Bit 6 = 0,1 Bit 5 = 0,1 Bit 4 = 0 Bit 3 = 0
3.6.3	systemCameraEquipped	NTCIP 1205	1.6, 3.7	Bit 7 = 1 Bit 6 = 1 Bit 5 = 0 Bit 4 = 0 Bit 3 = 0
3.6.4	systemLensFeatureControl	NTCIP 1205	2.6, 2.7, 2.8	Byte 1 Bit 7 = 0,1 Bit 6 = 0,1 Byte 2 Bit 7 = 0,1
3.6.5	systemLensFeatureStatus	NTCIP 1205	2.6, 2.7, 2.8	Byte 1 Bit 7 = 0,1 Bit 6 = 0,1
3.6.6	systemLensEquipped	NTCIP 1205	2.6, 2.7, 2.8	Byte 1 Bit 7 = 1 Bit 6 = 1
3.7.1	alarmStatus	NTCIP 1205	3.3	Bit 7 = 0 Bit 6 = 0 Bit 5 = 0 Bit 4 = 0,1 Bit 3 = 0,1 Bit 2 = 0 Bit 1 = 0
3.7.2	alarmLatchStatus	NTCIP 1205	**3.3**	Bit 7 = 0 Bit 6 = 0 Bit 5 = 0 Bit 4 = 0,1 Bit 3 = 0,1 Bit 2 = 0 Bit 1 = 0

MIB	Object Or Table Name	NTCIP Reference	NYSDOT Specification Section Reference	Expected Value
3.7.3	alarmLatchClear	NTCIP 1205	**3.3**	Bit 7 = 0 Bit 6 = 0 Bit 5 = 0 Bit 4 = 0,1 Bit 3 = 0,1 Bit 2 = 0 Bit 1 = 0
3.7.4	alarmTemperatureHighLowThreshold	NTCIP 1205	Not Applicable	
3.7.5	alarmTemperatureCurrentValue	NTCIP 1205	Not Applicable	
3.7.6	alarmPressureHighLowThreshold	NTCIP 1205	Not Applicable	
3.7.7	alarmPressureCurrentValue	NTCIP 1205	Not Applicable	
3.7.8	alarmWasherFluidHighLowThreshold	NTCIP 1205	Not Applicable	
3.7.9	alarmWasherFluidCurrentValue	NTCIP 1205	Not Applicable	
3.7.10	alarmLabelIndex	NTCIP 1205	1.3, 1.11	Byte 1 = 0 Byte 2 = 0 Byte 3 = 0 Byte 4 = 0 Byte 5 = 0 Byte 6 = 0 Byte 7 = 0
3.8.1	inputStatus	NTCIP 1205	Not Applicable	
3.8.2	inputLatchStatus	NTCIP 1205	Not Applicable	
3.8.3	inputLatchClear	NTCIP 1205	Not Applicable	
3.8.4	inputLabelIndex	NTCIP 1205	Not Applicable	
3.9.1	outputStatus	NTCIP 1205	Not Applicable	
3.9.2	outputControl	NTCIP 1205	Not Applicable	
3.9.3	outputLabelIndex	NTCIP 1205	Not Applicable	
3.10.1	zoneMaximum	NTCIP 1205	**3.9**	0
3.10.2	zoneTable	NTCIP 1205	**3.9**	INTEGER
3.10.2.1	zoneIndex	NTCIP 1205	**3.9**	1..255
3.10.2.2	zoneLabel	NTCIP 1205	**3.9**	1..255
3.10.2.3	zonePanLeftLimit	NTCIP 1205	**3.4 , 3.9**	0..35999
3.10.2.4	zonePanRightLimit	NTCIP 1205	**3.4 , 3.9**	0..35999
3.10.2.5	zoneTiltUpLimit	NTCIP 1205	3.4.1, 3.9 3.4.2, 3.9	0..3300 0--200
3.10.2.6	zoneTiltDownLimit	NTCIP 1205	3.4.1, 3.9 3.4.2, 3.9	0..26300 0..27000

Motion Control Conformance Group

MIB	Object Or Table Name	NTCIP Reference	NYSDOT Specification Section Reference	Expected Value
3.10.1	zoneMaximum	NTCIP 1205	Not Applicable	
3.4.1	presetGotoPosition	NTCIP 1205	3.2	0..n
3.4.2	presetStorePosition	NTCIP 1205	3.2	0..n
3.5.1	positionPan	NTCIP 1205	3.4	4 Byte msg
3.5.2	positionTilt	NTCIP 1205	3.4	4 Byte msg
3.5.3	positionZoomLens	NTCIP 1205	3.4	4 Byte msg
3.5.4	positionFocusLens	NTCIP 1205	3.4	4 Byte msg
3.5.5	positionIrisLens	NTCIP 1205	3.4	4 Byte msg – Only support continuous iris movement

n = number of presets supported by the CCTV Camera Assembly

Field HD IP Camera Assembly Requirements:

Provisions shall be made in the HD IP Camera Assembly for the installation of all accessories, cables, connectors, mounting hardware and equipment which are required for the full operation of the CCTV camera. The following equipment cabling shall be provided under other contract items:

a. Surge Protectors: All outputs/inputs cables from the camera including Ethernet cable, power cable and video and data shall be protected by individual surge protector. The surge protectors shall be the same or equal as:
   - Emerson Edco-Cat6-PoE
   - Emerson Edco-CX06-MI
   - Emerson Edco-PC642
   - Emerson Edco-PHC

b. Power Injector or 24 VAC Power Supply: The contractor shall furnish and install the Power Injector or power supply unit as per the Regional TMC. The Power Injector or power supply shall comply with camera manufacture requirements and shall be a ruggedized unit.

c. Video Monitoring and PTZ control Software: The contractor shall furnish and install the video monitoring and control software as per camera manufacture recommendations and the Regional TMC integration requirement guidelines. The Contractor shall furnish and install all necessary licenses for full software operation and testing. All software shall be the latest version from the vendor with expiration date beyond the project closeout date.

d. Camera Cabling: The Contractor shall furnish all Input/Out puts cables from the HD IP camera to the field equipment cabinet. These cables shall include, Ethernet, Power, Grounding, Video, Data, Control and I/O signal. The Cables shall be outdoor rated applicable for vertical

installation. The Contractor's cabling submittal shall include the camera cables with Camera Pole Lowering device connectors, if such lowering device is applicable to the project

e. Camera equipment and cables labels: The Contractor shall submit the complete label information of all HD IP Camera equipment and cables labels. The Labeling shall comply with the Regional Transportation Management Center (TMC) labeling format and standard requirements. All label materials shall be industry rated with minimum 10 year life time. The contractor can request a copy of the Regional TMC labeling format and standard.

f. Camera Alarm Interface/ Contacts – The Camera Alarm signal shall be connected to the Field Equipment cabinet. The Contractor shall furnish terminal and relays for connection to the cabinet Non-IP Alarm monitoring Unit. The Non-IP Alam Monitoring Unit will be paid under separate pay item.

g. Workmanship - Workmanship shall conform to the requirements of this specification and be in accordance with the highest industry standards.

h. All incidental parts necessary to complete the installation but not specified herein or on the plans shall be provided as necessary to provide a complete and properly operating system.

i. Manufacturer's extended warranty: The contractor shall transfer the HD IP Camera manufacture warranty service for a period of thirty six (36) months from the delivery date of the system under normal use and service.

The Contractor shall submit a detailed dimensional drawing and the HD IP Camera equipment general layout of each type of components used in the camera assembly with data sheet or cut sheet submittal for review by the Regional TMC Engineer. Only HD IP Camera Assembly items with approve.

Layouts will be accepted under this Contract. After HD IP Camera equipment general layout and components approval contractor shall submit the detail schematic drawing for review by the regional TMC engineer.

CONSTRUCTION DETAILS:

The HD IP Camera Assembly shall be installed on a designated CCTV pole or structure as shown on the plans along with conduit fittings necessary to bring cables from the camera to the designated field equipment cabinet. Each HD IP Camera Assembly shall be installed such that the line of sight of the camera is in the center line of the desired field of view when the camera is in the midpoint of the desired motion between the limit stops.

Each HD IP Camera Assembly shall be installed such that the home position for each camera shall be set to true North. The Regional TMC Engineer will provide the field of view of each camera, the limit settings of its vertical and horizontal movements and the programmable parameters prior to installation. The Contractor shall furnish and install the mounting hardware, including brackets, mounting plates, bolts, connectors, cabling between the camera housing and equipment cabinet, and weather heads required for the installation of the HD IP Camera Assembly. The Contractor shall install and connect the camera cables between the HD IP Camera Assembly and the

equipment cabinet in accordance with the manufacturer's recommendations.

The Contractor shall program and configure the HD IP Camera with a minimum of two digital view streams. The Video streams shall have maximum and minimum transmission bandwidths. The High quality video shall be designated to the Regional TMC and low quality video for other applications. As per Regional TMC direction the Contractor shall program the Camera presets and the camera display labels. The contractor shall coordinate with the Regional TMC regarding the video quality and maximum and minimum bandwidth requirement. The contractor shall document all configuration and programming of the camera and the document shall be submitted to the Regional TMC.

HD IP Camera Assembly Final Test:

Each HD IP Camera Assembly shall be field inspected and tested by the Regional TMC Engineer. The Contractor shall provide the HD IP Camera Assembly testing plan and check list with following items:

1. HD IP Camera unit (Model, manufacture, MAC Address, Serial NO.)
2. Camera Mounting
3. Camera assembly on the Lowering Device (If Lowering device is used)
4. Camera Cables connection at the Field equipment Cabinet Check
5. Camera Cables Labels and Installation Check
6. Camera Surge Protector installation and function test (Test as per manufacture recommendation)
7. Camera Cables Test
8. Camera Connection to Power and Network
9. Camera Setting and Configuration Test:
   a- IP Addressing (IP addresses, Ports, VLAN, Multicasting)
   b- High Quality Video Stream (Visual test, Video Latency, Bandwidth, Frame Rate, S/N, Error Rate, Zoom(1-30), Focus (Manual-Auto), and image stabilization Checks)
   c- Low resolution Video Stream (Visual test, Video Latency, Bandwidth, Frame Rate, S/N, Error Rate, Zoom(1-30), Focus (Manual-Auto), and image stabilization Checks)
   d- PTZ Control Test via Ethernet Port (Pan (1-Max), Tele (1-Max), Movement Latency (less than 1.5 Sec for 360 degree Checks)
   e- PTZ Control Test via Serial Data Port- If applicable (Pan (1-Max), Tele (1-Max), Movement Latency (less than 1.5 Sec for 360 degree Checks)
   f- NTCIP Protocol PTZ Control Test
   g- Video Related Protocol Test
   h- Data Protocol Test
   i- Analog Video Quality Check- If applicable
   j- Home Parking Preset Test
   k- Presets Programming and Test (minimum 8 Presets Check)
   l- Tours Programming and Test (minimum 8 Tours Check)
10. Camera Control/Monitor Software Test (Software to be installed in NYSDOT Notebook)
11. Camera Power source Check
12. Camera Power Injector or Supply Voltage measurement

13. Camera Ground resistant measurement Check (Test may performed during the installation and the data has been documented)
14. HD IP Camera Equipment at the Field Cabinet Grounding check
15. HD IP Camera Equipment at the Field Cabinet mounting (safety and secure installation) check
16. Camera Equipment Labeling (format and material)
17. Camera cables and wiring Labeling (format and material)
18. HD IP Camera Assembly Layout Drawing Check
19. HD IP Camera Assembly Internal Wiring Diagram Drawing Check
20. Camera Equipment and Cables Check list

The contractor shall prepare the above test procedures and check lists and submit to the Engineer for review a minimum of 60-Days prior to test schedules.

All Operation, monitoring and control tests shall be completed in a local mode (Stand-Alone Test Action at each field location with no network connectivity), Remote mode (remote access to the site via network with HD IP camera software) and Central mode test (Test via the Regional TMC existing video management system). The Integration of the HD IP Camera to the existing the Regional TMC video management system will be performs bythe Regional TMC. The contractor shall coordinate this integration with the Regional TMC.

Documentation:

Two submittals of the HD IP Camera Assembly Drawing Package shall be sent to the Regional TMC for review and approval. These submittals are:

- HD IP Camera Assembly Submittal, the Contractor shall make this submittal in advance prior to camera integration and wiring and equipment assembly. The camera assembly drawings package shall include but not limited to:
    - HD IP Camera Assembly equipment Manufacture Cut Sheets
    - HD IP Camera Assembly Layout (all physical dimensions and assembly details shall be included)
    - Camera Mounting details (including Lowering device mounting details and all mounting hardware details)
    - HD IP Camera Assembly Equipment at the Field Equipment Cabinet Placement
    - HD IP Camera Assembly Power, Communication/Network and Control Diagrams (all AC power, assign CB and power wires shall be included)
    - HD IP Camera Assembly Communication/Network, control wiring Diagram (all equipment connections and interfaces shall be included)
    - HD IP Camera Assembly equipment, cables and wiring labeling details

Final HD IP Camera Assembly Drawing Package, The HD IP Camera Assembly Drawing Package shall be approved by the regional TMC prior to final acceptance of HD IP Camera Assembly. The HD IP Camera Assembly drawings package shall include but not limited to:

- HD IP Camera Assembly, pole, pull boxes and cables Location Layouts. This Record Drawings shall include location of Pole, cabinet, camera and its equipment and wiring as per construction.

- HD IP Camera Equipment Layouts(all physical dimensions and assembly details shall be included)
- HD IP Camera Manufacturer's Data: Submit manufacturer's data sheets indicating camera systems and components proposed for use, including instruction manuals.
- Camera mounting details (including foundation, cabinet base details and pole mounting details). The shop drawing shall include the details of mounting, physical mounting hardware details, connectors and all terminations of the wires.
- HD IP Camera Equipment in Field Cabinet Placement (locations for the camera equipment components)
- HD IP Camera Assembly Power and Communication/Network and control wiring Diagram (all equipment connections and interfaces shall be included). The contractor submittal shall have complete shop drawings including connection diagrams for interfacing equipment, list of connected equipment.
- HD IP Camera Assembly Test Plan and Test Results (Submit results of field testing of every device including date, testing personnel, retesting date if applicable, and confirmation that every device passed field testing.)
- HD IP Camera Assembly equipment, cables and wiring labeling details
- Operation and Maintenance Data: Submit manufacturer's operation and maintenance data, customized to the system installed. Include system and operator manuals.
- Complete list of replaceable parts including names of vendors for parts not identified by universal part numbers such as JEDEC, RETMA or EIA

All HD IP Camera Assembly drawing shall be 11 x 17 size. All drawing shall be submitted in hard copy and electronic, and CAD (Microstation) formats. The Final HD IP Camera Assembly Drawing Package shall be signed by the contractor. Each HD IP Camera Assembly shall be supplied with three (3) copies of the Final HD IP Camera Assembly Drawing Package. One (1) copy shall be placed in a clear plastic envelope and left in the CCTV Field cabinet. Two (2) copies shall be delivered to the Engineer and the regional TMC. The Electronic/CAD (Microstation) copies shall be submitted to the regional TMC.

METHOD OF MEASUREMENT:

Each HD IP Camera Assembly will be measured as the number of complete units furnished, installed and tested.

BASIS OF PAYMENT:

The unit price bid for each HD IP Camera Assembly shall include the cost of furnishing all labor, materials, tools, pedestal, equipment and incidentals as necessary to complete the work.

ITEM: 683.10110008 - HD IP CAMERA ASSEMBLY - BARREL TYPE
ITEM: 683.10120008 - HD IP CAMERA ASSEMBLY - DOME TYPE
ITEM: 683.10130008 - HD IP CAMERA ASSEMBLY - SOLAR POWERED DOME TYPE

Progress payments will be made as follows:

Twenty Five percent (25%) of the bid price of each item will be paid upon satisfactory completion and approval of the HD IP Camera Assembly Submittal.

Sixty percent (60%) will be paid upon satisfactory completion of the HD IP Camera Assembly Test.

Fifteen percent (15%) will be paid upon satisfactory completion of 90-Day Operational Test of the HD IP Camera Assembly.

ITEM 683.10900010 - 5.8 GHz. WIRELESS VIDEO TRANSMITTER
ITEM 683.10910010 - 5.8 GHz. WIRELESS VIDEO RECEIVER

DESCRIPTION:

Under these items, the Contractor shall furnish and install a 5.8 GHz. Wireless Video link consisting of a 5.8 GHz. Wireless Video Transmitter and a 5.8 GHz. Wireless Video Receiver as shown on the Plans and as directed by the Engineer.

The 5.8 GHz. Wireless Video link is a simplex (unidirectional) link for video which modulates one analog baseband National Television System Committee (NTSC) video signal onto an appropriate carrier at the transmit end and then demodulates this signal to recover the baseband video signal at the receiver end.

The 5.8 GHz. Wireless Video Transmitter assembly shall consist of a circular polarized patch antenna, microwave transmitter and modulation equipment. The 5.8 GHz. Wireless Video Receiver assembly shall consist of circular polarized dish antenna, microwave receiver and modulation equipment. The equipment shall be designed for typical mounting on CCTV camera poles, wood utility poles or sign bridge structures. All 5.8 GHz. Wireless Video equipment shall be of solid state design and be from the same manufacturer.

The 5.8 GHz. Wireless Video equipment shall operate in the 5725-5875 MHz frequency range. The Contractor shall verify that there is no frequency conflict with other equipment at the sites shown on the plans.

MATERIALS:

All materials furnished, assembled, fabricated or installed under this item shall be new, corrosion resistant and in strict accordance with the details shown on the plans and in the Special Specifications.

Functional Requirements

The Contractor shall furnish and install the 5.8 GHz. Wireless Video equipment and all necessary components required to form a completely functional full motion video communications link.

The 5.8 GHz. Wireless Video equipment shall be capable of transmitting a baseband video signal between two locations with reasonable line of sight over distances not to exceed 6.84 miles.

Electrical Requirements

Channel Capacity

The 5.8 GHz. Wireless Video equipment shall provide a single simplex full motion analog video channel.

The 5.8 GHz. Wireless Video Transmitter station shall accept a standard analog NTSC color or monochrome video signal (1 volt p-p, 75 ohm).

Power Requirements

ITEM 683.10900010 - 5.8 GHz. WIRELESS VIDEO TRANSMITTER
ITEM 683.10910010 - 5.8 GHz. WIRELESS VIDEO RECEIVER

The 5.8 GHz. Wireless Video equipment shall meet all of its specified requirements when the input power is 115 ± 20 VAC, 60 ± 3 Hz.

The power supply shall be integral to the 5.8 GHz. Wireless Video units.

Transient Suppression

The video input of the 5.8 GHz. Wireless Video Transmitter and output of the 5.8 GHz. Wireless Video Receiver equipment shall terminate in a pole mounted surge protection enclosure or field equipment cabinet as required. The Contractor shall submit his proposed surge protection scheme to the Engineer for approval.

Mechanical Requirements

Enclosure

The equipment shall be packaged in a sturdy, durably finished aluminum housing suitable for spread spectrum radio equipment and for mounting on a pole exposed to the weather.

5.8 GHz. Wireless Video Transmitter

The 5.8 GHz. Wireless Video Transmitter shall have the following features:

Frequency Range:	5740-5860 MHz.
RF Output Power:	Per FCC Section 15.249, *"Operation within Bands 902-928 MHZ, 2400-2483.5 MHZ, 5725-5875 MHz and 24.0-24.25 Ghz".*
Frequency stability:	.0025% at -22 Deg F. to +140 Deg F.
Input Impedance:	75 Ohm

A 15 dB circular polarized patch antenna shall be furnished and installed with the 5.8 GHz. Wireless Video Transmitter. The antenna mounting hardware shall be designed to allow for at least 90 degrees of azimuth and elevation adjustment and shall provide for a positive position lock once optimum alignment has been achieved. All external screws, nuts and locking washers shall be stainless steel. No self-tapping screws shall be supplied unless specifically approved by the engineer. The antenna shall comply with the following specifications:

Frequency Range:	5725-5875 MHz
Bandwidth:	150 MHz (VSWR <2.0:1)
Element Gain:	15 dBi
Polarization:	Right or Left Hand circular
Front to back ratio:	> 15 dB
Axial Ratio:	< 3 dB across band
E-Plane Beamwidth:	> 18 Deg.
H-Plane Beamwidth:	> 18 Deg.
Impedance:	50 Ohm nominal

ITEM 683.10900010 - 5.8 GHz. WIRELESS VIDEO TRANSMITTER
ITEM 683.10910010 - 5.8 GHz. WIRELESS VIDEO RECEIVER

5.8 GHz. Wireless Video Receiver

The 5.8 GHz. Wireless Video Receiver shall have the following features:

Receiver Sensitiviy:	-90 dBm
Channel Rejection:	> 20 dB between even channels
	> 90 dB with 4 channel spacing
Image Rejection:	> 60 dB
Signal to Noise Ratio:	> 45 @ -75 dBm input

A 30 dB dish antenna shall be furnished and installed with the 5.8 GHz. Wireless Video Receiver. The antenna mounting hardware for the receiver shall be designed to allow for at least 90 degrees of azimuth and elevation adjustment and shall provide for a positive position lock once optimum alignment has been achieved. All external screws, nuts and locking washers shall be stainless steel. No self-tapping screws shall be supplied unless specifically approved by the engineer. The antenna shall comply with the following specifications:

Type:	dish
Diameter:	92 cm
Polarization:	circular
Element Gain:	> 30 dB for passive portion of dish
Front to back ratio:	> 30 dB
E-Plane Beamwidth:	> 5 Deg.
H-Plane Beamwidth:	> 5 Deg.
Bandwidth:	150 MHz. (VSWR < 2.0:1)

Environmental Design Requirements

The equipment shall meet all its specified requirements during and after being subjected to any combination of the following conditions:

Ambient temperature range of -35ºF to 165 º F.

Relative humidity range of 5 to 95%, non-condensing.

Operation in rain, fog and snow over the installed link distance (not to exceed 1.25 miles) provided that attenuation caused by these environmental conditions is within the manufacturer's design guidelines for the 5.8 GHz. Wireless Video equipment provided.

CONSTRUCTION DETAILS:

The 5.8 GHz. Wireless Video Transmitter and 5.8 GHz. Wireless Video Receiver and all other components required for the operation of a Wireless Video video link shall be installed under this Contract item. The

ITEM 683.10900010 - 5.8 GHz. WIRELESS VIDEO TRANSMITTER
ITEM 683.10910010 - 5.8 GHz. WIRELESS VIDEO RECEIVER

Contractor shall verify that the spread spectrum path is free of obstructions that could interfere with the operation of the link.

Documentation Requirements

Three (3) complete sets of operation and maintenance manuals shall be provided. The manuals shall, as a minimum, include the following:

- Complete description of equipment operation
- Complete installation procedures
- Complete performance specifications (functional, electrical, mechanical and environmental) on the unit or the link as applicable
- Complete and accurate troubleshooting, diagnostic and maintenance procedures
- Complete and accurate schematic diagrams
- Complete parts list including names of vendors for parts not identified by universal part numbers such as JEDEC, RETMA, or EIA
- Pictorial of components layout on circuit board
- Complete stage-by-stage explanation of circuit theory and operation

Testing Requirements

The 5.8 GHz. Wireless Video equipment shall be subjected to the levels of testing described in the Special Note for this Contract.

Training Requirements

Prior to the installation of any specified equipment, the Contractor's personnel shall have received training from the supplier on installation, operations, testing, maintenance, and repair procedures of all equipment. No equipment will be accepted without this proof.

In addition, training shall be provided to the individuals designated by the Engineer. The training shall include all material and manuals required for each individual. The training shall be as follows:

Maintenance Training

A minimum of 12 hours of training for up to five (5) maintenance personnel with an electrical/electronic background shall be provided. The training shall include both classroom and hands on equipment operation and maintenance. It shall include theory of operation, installation, alignment, operation instructions, circuit description, troubleshooting, preventative maintenance, field diagnostics, and field adjustments. It shall focus on installation, alignment, operation, fault isolation to the module and/or transceiver unit level and procedures

ITEM 683.10900010 - 5.8 GHz. WIRELESS VIDEO TRANSMITTER
ITEM 683.10910010 - 5.8 GHz. WIRELESS VIDEO RECEIVER

for operation of the Spread spectrum links and any electronic equipment required for maintenance.

METHOD OF MEASUREMENT:

This work will be measured as the number of 5.8 GHz. Wireless Video Transmitter and 5.8 GHz. Wireless Video Receiver units furnished, installed, made fully operational and tested.

BASIS OF PAYMENT:

The unit price bid for each 5.8 GHz. Wireless Video Transmitter and 5.8 GHz. Wireless Video Receiver shall include the cost of furnishing all labor, training, materials, tools and equipment necessary to complete the work. Payment for all miscellaneous radio equipment, antennas, hardware, cabling, connectors, transient protection and enclosure, necessary documentation and testing shall be included under this item.

ITEM 683.91150010 – MULTI-LANE RADAR TRAFFIC DETECTOR - FURNISH AND INSTALL
ITEM 683. 91160010 – MULTI-LANE RADAR TRAFFIC DETECTOR - FURNISH ONLY

DESCRIPTION:

For Item 683.91150010, this work shall consist of furnishing and installing Multi-Lane Radar Traffic Detector units and associated field processing equipment and cabling to provide loop emulation contact closure inputs, either single loop or dual loop speed trap configured into a Type 170E, 2070 or BL2000 Series Controller input file in accordance with the contract documents.

For Item 683.91160010 this work shall consist of furnishing only all materials associated with the Multi-Lane Radar Traffic Detector unit and associated cables, power supplies and Type 170E, 2070 or BL2000 Series Controller input file interfaces to facilitate future installation of a detector station that provides speed loop trap emulation contact closure inputs for a minimum of five (5) lanes as specified herein. Item 683.91160010 shall also be provided with serial port and Ethernet port interfaces specified herein. Testing for Item 683.91160010 shall be limited to the design demonstration test level. A set of documentation is required with each detector furnished. Separate training is not required for Item 683.91160010.

MATERIALS:

All materials furnished, assembled, fabricated or installed shall be new, corrosion resistant and in strict accordance with the details shown in the contract documents and in the Special Notes. All equipment furnished under this item shall be current production equipment, identical models of which are field operational.

Functional Requirements:

The Multi-Lane Radar Traffic Detector shall include all mounting hardware as recommended by the manufacturer and as approved by the Engineer. The detector's sensor shall be mounted on a site specific basis as shown in the contract documents and shall include sensor mounting brackets that are suitable for mounting on traffic signal poles, camera poles, light poles, sign structure vertical support posts or chord members or vertical concrete or steel surfaces.

The Multi-Lane Radar Traffic Detector shall include processing hardware to plug into a Type 170E, 2070 or BL2000 Series Controller input file to convert serial data from the sensor to contact closure type outputs that emulate loops as a single loop or dual loop speed trap configuration for each lane of the roadway adjacent to the sensor as designated in the contract documents.

ITEM 683.91150010 – MULTI-LANE RADAR TRAFFIC DETECTOR - FURNISH AND INSTALL
ITEM 683. 91160010 – MULTI-LANE RADAR TRAFFIC DETECTOR - FURNISH ONLY

The Multi-Lane Radar Traffic Detector units and processing hardware shall be compatible and from the same manufacturer.

Each Multi-Lane Radar Traffic Detector shall be capable of providing vehicle detection zone coverage for a minimum of ten (10) lanes of traffic simultaneously adjacent to the sensor location. The Multi-Lane Radar Traffic Detector shall be capable of transmitting data over serial and TCP/IP connections.

The loop emulation interface cards or BL200 Series Controller shall plug into an Input File Assembly, either existing or provided as part of another bid item as specified in the contract documents.

Qualifications:

Prior to commencing work on this item, the Contractor shall provide the Engineer with evidence of the Multi-Lane Radar Traffic Detector manufacturer having provided at least three successful detector installations of six or more sensors identical to the model proposed on limited access facilities or, as judged by the Engineer, installation experience of comparable complexity. The submittal shall include the names and phone numbers of users familiar with the installations.

Specific Requirements:

Multi-Lane Radar Traffic Detector Mounting

The Multi-Lane Radar Traffic Detector units shall meet the following requirements:

- The sensor unit shall be mounted in a side-fired position of the roadway along the shoulder on a pole, sign structure, or bridge abutment/pier face.
- The sensor shall meet the specified performance criteria with a mounting height in the range of 15 to 45 feet above the roadway. The height will be as recommended by the operations manual so that masking of vehicles is minimized and that all detection zones are contained within the specified elevation angle as suggested by the manufacturer.
- The Horizontal distance from the sensor to the first detection zone shall be between 7 to 40 feet as specified in the contract documents.

Performance Requirements

The output from the Multi-Lane Radar Traffic Detector shall be capable of emulating the following:

ITEM 683.91150010 – MULTI-LANE RADAR TRAFFIC DETECTOR - FURNISH AND INSTALL
ITEM 683. 91160010 – MULTI-LANE RADAR TRAFFIC DETECTOR - FURNISH ONLY

- Contact closure for single (6 ft x 6 ft) loop presence. The maximum acceptable vehicle count error is ±10% as compared with the ground true vehicle count, where ground true is provided by manual counts.
- Contact closures of dual (6 ft x 6 ft) loop speed traps with a user defined separation of 16 feet leading edge to leading edge. The generated speed shall mimic the speed generated from the time a vehicle would take to travel across an actual dual loop speed trap with the same configuration as read through a 170E/2070 controller. The maximum acceptable per lane speed error is ±10% as compared to the speed generated by a radar/laser gun. These accuracies shall be provided when the vehicle travels at any speed in the range of 0 to 90 miles per hour.

The detection zone configuration shall minimize the occurrence of a double count for the same vehicle while ensuring that it shall be counted at least once.

The Multi-Lane Radar Traffic Detector System shall be capable of detecting vehicles traveling in either direction in the detection zone towards or away from the sensor, as programmed by the user. The specified accuracy shall be provided in rain, freezing rain, snow, fog and winds up to 100 miles per hour.

Configuration Data Storage
All fine tuning and configuration data shall be stored in non-volatile memory in the sensor. The configuration software shall save the data for each sensor to a separate back-up file that can be read on any laptop running the configuration software.

Electrical Requirements:

Microwave Transmission

The Multi-Lane Radar Traffic Detector shall transmit in the 24.00 – 24.25 GHz frequency band. It shall comply with the limits for a Class A digital device, pursuant to Part 15 of the FCC rules. The Multi-Lane Radar Traffic Detector shall not interfere with any known equipment.

Multi-Lane Radar Traffic Detector Output to Controller:

One contact closure in single lane or two contact closures in speed trap configuration per lane shall be provided. Each optically isolated contact closure shall indicate presence.

Data Interface Requirements

- Either RS-232 or RS-422 between the sensor and the loop emulation card as appropriate for the site specific conditions at the detector installation.
- 10/100 Ethernet Port (TCP/IP)

Power

Loop Emulation Interface Cards: 24 VDC from Input File Power Supply.
Sensor:

- Voltage: over range of 12 VDC to 24 VDC.
- Power: 9 watts maximum.

The sensor voltage shall be derived from a stand-alone +24 VDC power supply provided as part of this item. The power supply shall be voltage limited to +24 VDC and 1 A maximum. The power supply shall be housed in the cabinet designated in the contract documents and shall operate over the temperature range of -30°F to +158°F. In the event of an in interruption in power to the Multi-Lane Radar Traffic Detector or loop emulation interface, the equipment shall automatically recover after power has been restored such that all detector configuration parameters are returned to their last known configuration before power disruption.

Surge

A surge protector shall be furnished and installed between the sensor and terminating cabinet to protect loop emulation circuitry and input file equipment as well as the sensor head.

Mechanical Requirements:

Loop Emulation Cards

- Designed for installation into a Type 170E, 2070 or BL2000 Series Controller input file Assembly.
- Each card shall occupy a single input file slot capable of generating a minimum of two (2) contact closures.
- A minimum of five (5) lanes of dual loop speed trap emulation shall be provided per sensor head.

Traffic Detector Unit

- Tamper proof enclosure.

ITEM 683.91150010 – MULTI-LANE RADAR TRAFFIC DETECTOR - FURNISH AND INSTALL
ITEM 683. 91160010 – MULTI-LANE RADAR TRAFFIC DETECTOR - FURNISH ONLY

- The housing shall be completely environmentally sealed. The cables and harness shall enter at the rear and/or the bottom of the housing, with sealing gaskets at entry points to prevent air and moisture entry.
- Maximum dimensions: 14 inches long X 11 inches wide X 7 inches deep.
- Max weight: 5 lbs.

Connectors and Harness

The Contractor shall provide all cables and mating connectors including power cables in conformance with the NEC and all other applicable codes including local codes.

Environmental Requirements

- Temperature: operating: -30°F to +158°F
- Humidity: 5 to 95% (non-condensing).
- Shock: NEMA TS-2-2.1.10
- Vibration: NEMA TS-2-2.1.9

CONSTRUCTION DETAILS:

The Contractor shall furnish and install Multi-Lane Radar Traffic Detectors as specified in the Contract Documents and adjust the sensors and configure the lane detection zones such that all lanes assigned to that sensor have detection zones that meet the specified accuracy requirements. The loop emulation cards shall be set to provide the specified single lane or speed trap emulation contact closures as determined by the associated input file.

The Contractor shall furnish and install all cabling in accordance with the detector manufacturer recommendations between the Multi-Lane Radar Traffic Detector unit and the cabinet containing either the loop emulation cards or BL2000 controller, where the cabinet and sensor are co-located, or the sensor and the cabinet containing the modem, where the cabinet containing the loop emulation cards or BL2000 controller and the sensor are located remotely.

The sensor enclosure shall be electrically grounded using a No. 6 AWG bonding conductor. Ground resistance measurements shall be submitted to the Engineer.

All cables, cards, power and communications equipment in shall be clearly and permanently labeled according to the contract documents or approved network diagrams, as ordered by the Engineer.

Configuration Programming and Backup

ITEM 683.91150010 – MULTI-LANE RADAR TRAFFIC DETECTOR - FURNISH AND INSTALL
ITEM 683. 91160010 – MULTI-LANE RADAR TRAFFIC DETECTOR - FURNISH ONLY

The Contractor shall use manufacturer supplied configuration software to perform detection zone fine tuning at each sensor location. The Contractor shall also supply to the Engineer three copies of the software with full documentation for use by future maintenance personnel.

Training

Installer Training:

All of the personnel involved in the installation and testing of this equipment shall have received training in such task prior to installation of the equipment. Training shall consist of formal classroom lectures as well as "hands-on" training, working with the actual equipment. Proof of training shall be submitted to the Engineer a minimum of ten-working days prior to the start of the first installation. The Contractor shall not install the Multi-Lane Radar Traffic Detector equipment until the personnel have been approved by the Engineer.

Maintenance and Operations Training:

All of the NYSDOT personnel involved in the maintenance, operations and repair of this equipment shall have received training in such task prior to acceptance of the equipment. Training shall consist of formal classroom lectures as well as "hands-on" opportunity to install and configure a Multi-Lane Radar Traffic Detector in the field. Proof of training shall be submitted and approved by the Engineer prior to final acceptance.

Documentation

Manuals

The Contractor shall furnish ten (10) sets of maintenance and operations manuals and two (2) sets on compact discs. The maintenance manuals shall contain maintenance and trouble shooting charts and procedures to permit fault isolation to the lowest replaceable unit level. The Contractor shall assemble the individual manuals and trouble shooting and fault isolation procedures into loose leaf binder(s). The equipment manuals shall as a minimum contain the following:

a. Complete and accurate schematic diagrams
b. Complete installation and operation procedures
c. Complete functional, electrical, mechanical and environmental performance specifications of the unit.

d. Complete list of replaceable parts including names of vendors for parts not identified by universal part numbers such as JEDEC/ RETMA or EIA.
e. Complete maintenance and troubleshooting procedures.

Testing Requirements

An Operational Stand-Alone Test shall be conducted to verify proper operation of the Detector.
TESTING

The Engineer shall be notified in writing a minimum of ten (10) days in advance of the time when equipment tests are to be conducted. The results of each test shall be compared with the requirements specified herein. Failure to conform to the requirements of any test shall be counted as a defect, and equipment shall be subject to rejection by the Engineer. Rejected equipment may be offered again for retest provided all non-compliances have been corrected and retested by the Contractor and evidence thereof submitted to the Engineer.

The equipment tests must be completed within five (5) days and any delays in performing tests will result in the Contractor paying the additional costs of providing the Engineer's representatives for the additional testing.

The Contractor shall provide all design approval, demonstration, stand-alone subsystem test procedures and data forms to the Engineer for approval. The test procedures shall include the sequence of conducting tests and the pass/fail criteria. The test procedures shall have the Engineer's approval prior to conducting the test.

The Contractor shall furnish data forms containing all of the data taken, as well as quantitative results for all tests. The data forms shall be signed by the equipment manufacturer and/or the Contractor. At least one copy of the data forms shall be sent to the Engineer.

Demonstration Tests
The Contractor shall be responsible for conducting demonstration tests on all units at the Contractor's facility. These tests shall be performed on each unit supplied. The contractor shall provide the written test procedure and test result forms to the Engineer for approval. The test results shall be provided to the Engineer demonstrating that the equipment meets the specifications. All tests shall be conducted in accordance with the approved test procedure.

All equipment accepted shall have passed the following individual tests:

Examination of Product

ITEM 683.91150010 – MULTI-LANE RADAR TRAFFIC DETECTOR - FURNISH AND INSTALL
ITEM 683. 91160010 – MULTI-LANE RADAR TRAFFIC DETECTOR - FURNISH ONLY

Each unit shall be examined carefully to verify that materials, design, construction, markings and workmanship comply with the requirements of these Provisions and the specifications and contractor shall provide product certifications forms to NYSDOT from the manufacturer.

Continuity Test
The wiring shall be checked to determine conformance with the requirements of the appropriate paragraphs in the Electrical Requirements sections.

Operational Tests
Each unit of equipment shall be operated long enough to permit equipment temperature stabilization, and to check and record an adequate number of performance characteristics to ensure compliance with the requirements of these Provisions.

Subsystem Staging Tests
The Contractor shall conduct approved staging tests of the major subsystems including vehicle detection at the Contractor's facility.

The test shall, as a minimum, exercise all the input and output functions of the subsystem and demonstrate all operational features.

Each subsystem accepted shall have successfully passed the staging tests prior to delivery and on-site installation.

If a unit fails its demonstration test, the unit shall be corrected or another unit substituted in its place and the test successfully repeated.

If a unit has been modified as result of a demonstration test failure, a report shall be prepared and delivered to the Engineer prior to shipment of the equipment. The report shall describe the failure and corrective action taken. If a failure pattern, as defined by the Engineer, develops, the Engineer may direct that design and construction modifications be made to all units without additional cost to the State or extension of the contract period.

On-Site Stand-Alone Tests
Prior to conducting each test, the contractor shall submit an approved test procedure.

The Contractor shall conduct an approved stand-alone test of the equipment installed at the field sites.

The tests shall, as a minimum, exercise all stand-alone (non-network) functional operations of the field equipment with all the equipment installed per the plans and as directed by the

Engineer. Approved data forms shall be completed and turned over to the Engineer as the basis for review and rejection or acceptance.

If a unit fails its stand-alone test, the unit shall be corrected or another unit substituted in its place and the test successfully repeated. If a unit has been modified as a result of a stand-alone test failure, a report shall be prepared and delivered to the Engineer prior to retesting of the equipment. The report shall describe the nature of the failure and corrective action taken. If a failure pattern, as defined by the Engineer, develops, the Engineer may direct that design and construction modifications be made to all units without additional cost to the State or extension of the contract period.

In addition to the testing described in the Special Notes, the Multi-Lane Radar Traffic Detector equipment shall be subjected to the following testing:

Design Demonstration Tests

Prior to the installation of the Multi-Lane Radar Traffic Detectors, the Contractor shall perform a Design Demonstration Test at the manufacturer's facility or with the approval of the Engineer at a detector site in the project area. The test, as a minimum, shall demonstrate the following using test equipment furnished by the Contractor:

a. Configuration of the installation using a notebook computer.
b. Storage of configuration data in nonvolatile memory.
c. Downloading previously stored configuration data.
d. Detecting vehicles to the accuracy specified in this special specification across ten lanes of traffic separated from traffic traveling in the opposite direction.
e. Accuracy of the spacing between the two pulses with the speed of the vehicles passing through the detection zone measured with a radar or laser (e.g., Laser Technology LTI Marksman).
f. A test car of known length shall be driven through the detection zone and its calculated presence, based on the known vehicle length and speed, compared to that of the measured pulses. This measurement shall be repeated a total of ten times with a minimum of twice in each detection zone.

Multi-Lane Radar Traffic Detector Local and Remote Site Verification Test

Upon installation of the Multi-Lane Radar Traffic Detector equipment, the Contractor shall test the equipment locally at each site using Contractor supplied configuration/monitoring software running on a notebook computer. The Contractor shall verify the volume counts and speed measurements made by the Multi-Lane Radar Traffic Detector.

ITEM 683.91150010 – MULTI-LANE RADAR TRAFFIC DETECTOR - FURNISH AND INSTALL
ITEM 683. 91160010 – MULTI-LANE RADAR TRAFFIC DETECTOR - FURNISH ONLY

To verify volumes, the vehicles in each lane shall be manually counted by the Contractor and compared to the data accumulated by the sensor. A minimum of 15 minutes of vehicle volume data shall be compared for each lane detection zone. Upon successfully verifying the accuracy requirements of this specification (±10% error), a second 15 minute count period shall be performed per lane to rule out coincidental acceptance.

To verify the speed measurements, a radar or laser gun (e.g., Laser Technology LTI Marksman) shall be used. A minimum of fifty measurements shall be taken for each lane of traffic at each sensor location and compared to sensor generated speed data. Upon successfully verifying the accuracy requirements of this specification (±10% error), a second minimum of fifty measurements shall be taken for each lane of traffic at each sensor location and compared to sensor generated speed data to rule out coincidental acceptance.

All testing and manual count analysis shall be performed in the presence of the Engineer.

After successful completion of the local testing, the Contractor shall perform testing remotely with the sensors connected locally to their assigned controller and detector data being obtained and observed at the central detector processor server. The remote tests shall verify to the satisfaction of the Engineer that the sensor data for each lane is properly routed from the assigned controller to the central detector processor server database and that the central detector database is properly configured.

Warranties and Guarantees

The Contractor shall provide warranties and guarantees for the equipment's operations for a period of 12 months starting from the passing of the Final System Acceptance Tests, covering both parts and labor for the detector, all associated interface cards and cables, and all accessory equipment.

METHOD OF MEASUREMENT:

For Item 683.91150010, Multi-lane Radar Traffic Detectors Furnish and Install will be measured for payment as the number of detectors furnished, installed, made fully operational and tested.

For Item 683.91160010, Multi-lane Radar Traffic Detectors Furnish Only will be measured for payment as the number of detectors furnished and delivered to designated NYSDOT facilities.

BASIS OF PAYMENT:

ITEM 683.91150010 – MULTI-LANE RADAR TRAFFIC DETECTOR - FURNISH AND INSTALL
ITEM 683. 91160010 – MULTI-LANE RADAR TRAFFIC DETECTOR - FURNISH ONLY

For Item 683.91150010, Multi-lane Radar Traffic Detectors Furnish and Install, the unit price bid for each Multi-lane Radar Traffic Detector shall include the cost of furnishing all labor, training, materials, tools and equipment necessary to complete the work and for performing the Design Demonstration Test and Radar Traffic Detector Local Site Verification Tests. The cost of loop emulation cards, Ethernet cards, surge protector, configuration software, all miscellaneous hardware, junction boxes, cabling and connectors, mounting hardware, training, documentation, and testing shall be included in the unit price bid for this item.

Progress payments for Item 683.91150010 will be made as follows:

- Fifty-percent of the price bid for each item will be paid upon successful installation and initial setup of each sensor including all miscellaneous cabling and cards.
- Twenty-percent of the price bid for each item will be paid upon successful completion of the Multi-lane Radar Traffic Detector Local Site Verification Test.
- Twenty-percent of the price bid for each item will be paid upon successful completion of the Multi-lane Radar Traffic Detector Remote Site Verification Test.
- Ten-percent of the price bid will be paid upon Final System Acceptance.

For Item 683.91160010, Multi-lane Radar Traffic Detectors Furnish Only, the unit price bid shall include the cost of furnishing all materials and equipment specified including the loop emulation cards, Ethernet cards, surge protection, configuration software, all miscellaneous hardware, junction boxes, cabling and connectors, mounting hardware, as well as performance of the Design Demonstration Testing and furnishing documentation with their original documentation and packaging. The Contractor shall be paid the unit bid price when the detector has passed design demonstration testing and it is delivered to an approved NYSDOT facility.

ITEM 683.93XXYZ04 – DYNAMIC MESSAGE SIGN (DMS) FULL MATRIX, FRONT ACCESS LED

DESCRIPTION

This work item shall consist of furnishing and installing a complete front access, full matrix, LED Dynamic Message Sign (DMS) assembly at locations indicated in the contract documents. This item shall include all sign modules, sign housings, sign cabinets and controllers, fittings and cabling to make the sign compatible with the control software defined in this document.

MATERIALS

DMS:

Unless otherwise specified on the contract plans the DMS equipment shall include, but not limited to, the following components:

- DMS display modules and associated attachment hardware, capable of full matrix alphanumeric and special character messages including displaying message with a character height of 18” and character width of 9.6”.
- DMS controller(s).
- DMS software (where required).
- Controller Cabinet and Base (excluding footings);
- All required surge suppression, power and data cabling, and miscellaneous ancillaries.
- Conduits.
- Sign mounting hardware (size and type to be as approved by the manufacturer).
- Solar panels and mounting assembly (for Solar option)
- Power Supplies (for AC option)

The complete LED DMS assembly shall conform to the requirements of the current National Electrical Manufacturers Association (NEMA) Standard No. TS-4 - Section 2, Environmental Standards and Test Procedures. The manufacturer shall provide certification for equipment compliance with NEMA environmental standards in accordance with NEMA testing procedures.

Materials not specifically covered in these specifications shall be in accordance with the accepted standards of the NEMA, the Underwriters Laboratories (UL) Inc., the National Electrical Code (NEC), and the American Society for Testing and Materials (ASTM).

Operating range shall be from - 30° F to + 165° F; relative humidity 0% to 95% non-condensing.

For all message boards the use of heaters, fans, and filters shall not be permitted in order to reduce the maintenance requirements for servicing the signs.

All electronic setup and adjustments for the display shall be enabled from the ground mounted equipment cabinet.

ITEM 683.93XXYZ04 – DYNAMIC MESSAGE SIGN (DMS) FULL MATRIX, FRONT ACCESS LED

All materials to be furnished, assembled, fabricated or installed shall be new, corrosion resistant and in accordance with the details as shown on the Plans or as specified in the Contract documents.

The DMS front face borders shall be constructed with vertically and horizontal channeled trim to provide a high-contrast background. The trim pieces shall be fabricated using aluminum sheeting. The trim shall border the entire DMS display.

All DMS front face trim pieces that are visible shall be powder coated with a textured black Rohm and Haas 31-7091TGIC polyester finish.

The DMS shall be installable either over the road or adjacent to the road side as shown in the contract plans.

Unless otherwise specified by the manufacturer the DMS shall use standard extruded aluminum clamps and bolts which will secure the DMS to the specified support members. In all installed applications the support clips and hardware shall be in accordance with the manufactures standard installation guidelines and shall be supplied by the manufacturer.

For installation along roadsides, the DMS shall be constructed of such a size, depth and weight to allow installation on breakaway I-Beams.

The sign assembly and mounting hardware shall be designed to meet the loading and fatigue requirements specified in the following documents:

> "NYSDOT Design Specification for Overhead Sign Structures Carrying Variable Message Signs" dated October, 1998; and the revisions to this document contained in:
>
> Engineering Bulletin EB 01-049, "Overhead Sign Structure Interim Design Criteria", dated 10/01/01; Engineering Instruction EI 99-038 "Design Loads for Permanent Variable Message Signs", dated 12/31/99; and any other subsequent revisions.

ITEM 683.93XXYZ04 – DYNAMIC MESSAGE SIGN (DMS) FULL MATRIX, FRONT ACCESS LED

CONTROLLER CABINET:

The control cabinet containing the sign controller, communications, and power supplies shall be either post mounted or base mounted with dimensions, location, and orientation as shown on the contract plans. Unless otherwise noted all cabinets, cabinet bases, internal components, and mounting hardware shall be paid for under this contract item.

Cabinet foundation, work pads, or buried conduit shall be paid for under various contract items as noted on the plans.

Whenever possible the cabinets shall come pre-wired from the manufacturer to expedite installation and ensure quality control of communications and power component installation.

The controller cabinet shall be constructed to have a neat, professional appearance. The cabinet shall protect all internal components from rain, ice, dust and corrosion in accordance with NEMA enclosure Type 3R standards, as described in NEMA Standards Publication 250-1997, Enclosures for Electrical Equipment (1000 Volts Maximum).

Internal component hardware (nuts, bolts, screws, standoffs, rivets, fasteners, etc.) shall be fabricated from hot dipped galvanized steel, stainless steel, aluminum, nylon or other durable corrosion-resistant materials suitable for roadway signage applications.

The cabinet shall be constructed using 0.125-inch thick aluminum alloy 5052-H32 with an exterior made of natural mill-finish aluminum.

All cabinet components shall be removable and replaceable by a single technician.

One (1) vertically hinged door shall be mounted on the cabinet for service access. Each door opening shall be sealed with neoprene gasket.

The door shall be attached to the cabinet by a full-length stainless steel piano hinge and mounting hardware. The door shall open outward. In the closed position, the door shall latch to a double-flanged door opening with a three-point draw-roller mechanism. The door handle shall be stainless steel. The door shall have a doorstop to hold the door in the open position. The door shall each be equipped with a Corbin #2 lock.LED Display

LED MODULES:

LED's shall be **Amber** in color with a minimum of 5 LED's per pixel, traceable to the manufacturer, with a typical luminous intensity of 3500 millicandela per LED when driven at 20 mA. The LED's used in the display shall be obtained from batches sorted for luminous output, where the highest luminosity LED shall not be more than fifty percent more luminous than the lowest luminosity LED. The brightness and color of each pixel shall be uniform over the entire face of the sign, within the required cone of vision, at a distance of 100 to 1100 feet, in all lighting conditions.

The LEDs shall be protected from degradation due to sunlight and shall be untinted, non-diffused, a high power aluminum indium gallium phosphide (AlInGaP) amber LED with a peak wavelength 590 +/-5 nanometers.

Unless otherwise shown on the contract plans the LED pixel and module construction technique shall result in a minimum viewing cone of 30 degrees horizontal and 15 degrees vertical.

Each display module shall be completely environmentally sealed. The protective face of the LED module shall be a solar grade polycarbonate material. All masks that are used to enhance the LED contrast or readability shall be UV inhibited.

Each display module shall be based on a single printed circuit board. Designs using multiple levels of control electronics including daughter boards shall not be allowed.

Each module shall be configured via the communication wiring harness and connector without individually addressing each module.

The module shall have IP64 certification for dust and water protection under the International Standard IEC 60529 Edition 2.1.

Each module must be constructed to preclude distortion from an 80 MPH wind load.

Each module shall be identical and interchangeable; to be removed and replaced easily using simple hand tools without affecting the operation of the remaining modules. The mounting design shall use mechanical fasteners that are resistant to vibration and vandalism.

CIRCUIT BOARD ELECTRONICS:

All printed circuit boards shall be FR-4 0.06 in. material, minimum 28 gram copper, double sided with plated holes meeting environmental requirements with moisture proofing conformal coating.

The DMS back plate shall include a NEMA rated distribution cabinet where all sign power and communication is to be terminated onto separate terminal blocks. One terminal block shall be for incoming DC power and the other shall be for incoming DMS signal cabling or a communications line. The distribution cabinet shall be located on the sign panel such that it is closest to the controller cabinet.

POWER REQUIREMENTS:

AC Option:

The DMS system power supply shall operate from a 120/240 VAC, 60Hz, single-phase power source, including neutral and earth ground. All cabinet and sign components including display

modules shall operate from a 12 VDC power supply.

The power supplies shall be rated to supply the required amperage for all DC powered installed equipment and with all LED modules set at full brightness plus twenty-five percent.

The cabinet shall contain a power panel and an AC load center with a minimum of 6 circuit breaker mounting positions.

The power panel shall contain a two (2) 15-A NEMA 15-R, 120 VAC duplex outlets, with ground-fault circuit interrupters.

The power panel shall include one (1) earth ground lug that is electrically bonded to the cabinet. All earth grounding shall conform to the National Electrical Code.

The power supplies shall be short circuit protected by DC power off and reset automatically with AC power off. The power supplies shall be protected by an overload allowance ranging from 105% up to 135% of inrush current.

SOLAR/DC Option:

The DMS system power supply shall operate from a 12VDC system. The system shall consist of photovoltaic solar panels, battery storage, and a multipoint power tracking charger to regulate solar-to-battery charging. All cabinet and sign components including display modules shall operate from this 12 VDC power supply.

Photovoltaic (PV) Cells:

The number of PV cells and required power output (wattage) of the PV system shall be as determined by the manufacturer based on sign dimensions as shown on the contract plans.

The PV cells shall be mounted on a sturdy frame with maximum dimensions of 127 inches in length by 48 inches in height, or as designated by the manufacturer. The PV frame shall allow for 60 degrees of tilt and allow for assembly rotation, fully independent of the DMS orientation

Panels shall be attached to the top a heavy post as shown on the contract plans and shall be designed and approved by the manufacturer. All attachment hardware, steel, and fabrication costs shall be included with this item.

Solar Charging Regulator:

The solar charging regulator shall be of the maximum power point tracking (MPPT) type and shall meet the following requirements:

- Rated Solar Current: 30A (MIN)
- Rated Load Current: 30A (MIN)
- Peak Efficiency: 99%
- Nominal System DC Voltage: 12, 24, 36 or 48

ITEM 683.93XXYZ04 – DYNAMIC MESSAGE SIGN (DMS) FULL MATRIX, FRONT ACCESS LED

- System Voltage: 12V/24V/48V
- Ambient Temperature: –40°C to +45°C
- Storage Temperature: –55°C to +100°C
- Humidity 100% non-condensing
- Max. Solar Open Circuit DC Voltage 150
- Battery Operating DC Voltage Range: 8-72
- Maximum Self-consumption: 2.7 Watts
- Transient Surge Protection: 4500 Watts/port

Batteries:
All supplied batteries shall be a valve regulated lead Acid AGM (Absorption Glass Mat) type.

To ensure adequate capacity a minimum of eight (8) deep cycle batteries shall be used and capable of being wired as a 12 volt system.

Each battery must have nominal dimensions equal to or less than 10.25”L x 7”W x 11.25”H and be rated for a minimum of 225 Amp-Hr.

The batteries and solar panels shall be rated to supply the required amperage for all DC powered installed equipment and with all LED modules set at full brightness plus twenty-five percent.

Surge Suppression:
The DMS distribution box shall contain surge suppression for both the DC power and sign communications. The sign power surge suppression shall consist of thermal resettable fuses conforming to SAE specification J53 Type 1. The sign communication shall consist of a surge suppression device capable of withstanding a 10kA peak surge in < 1 nanosecond.

DMS CONTROLLER:
The controller shall capable of providing all the necessary functions to control and monitor the DMS locally and from the Traffic Management Center (TMC). Local control shall be made possible in the field by either an alphanumeric keypad or optional QWERTY keyboard connected to the controller with and LCD display.

The controller shall be mounted in the cabinet as shown in the contract plans or as provided by the manufacturer. The communication signals from sign controller to the DMS shall be RS-232 for distances up to 50 feet and RS-485 for distances up to 4,000 feet. Optional TCP/IP communications will also be an acceptable communications technology.

Photocell:
Each sign assembly shall include photo cells for automatic pixel brightness adjustment to suit ambient lighting conditions. Brightness shall also be manually settable from the front panel of the controller and remotely from the DMS Central Control System in about 5% increments. Control shall be returnable to automatic from both the sign controller and the central computer.

Fonts and Messaging:

Message text shall be configurable for variable character height, width, character spacing, and line spacing. The DMS font messaging requirements for this specification shall be capable of displaying the specified number of characters based on a maximum character height of 18 inches. The font style, height, and messages displayed shall conform to all applicable standards as described in the Manual on Uniform Traffic Control Devices, 2009 Edition, Chapter 2L, and all applicable NYSDOT supplements:

- Spacing between characters in a word should be between 25 to 40 percent of the letter height.
- Spacing between words in a message should be between 75 and 100 percent of the letter height.
- Spacing between the message lines should be between 50 and 75 percent of the letter height.
- The minimum letter height should be 18 inches for changeable message signs on roadways with speed limits of 45 mph or higher.
- The minimum letter height should be 12 inches for changeable message signs on roadways with speed limits of less than 45 mph.
- The character display width shall be capable of at least 9.6 inches.

Users shall configure the fonts supported by the sign on an alphanumeric keyboard.

Message text shall be configurable for variable character height, width, character spacing, and line spacing.

NATIONAL TRANSPORTATION COMMUNICATIONS FOR ITS PROTOCOL (NTCIP):

The controller shall communicate using the NTCIP standards listed here and all current revisions released at the time of bidding. The manufacturer shall be required to provide the NTCIP test results to verify conformance with the minimum standards as outlined here. Any published amendments to these standards at the time of contract advertisement shall be also be effective on this contract.

The following requirements defines those MIB objects which are expected to be used for the communications to the DMS:

NTCIP 1103 V03– Transportation Management Protocols
NTCIP 2104:2003 v01.11 - Ethernet Subnetwork Profile
NTCIP 2202: 2001 - Internet (TCP/IP and UDP/IP) Transport Profile

The following table defines those MIB objects which are expected to be used by the DMS:

CONFORMANCE GROUP OBJECTS	REFERENCE	CONFORMANCE	PROJECT

ITEM 683.93XXYZ04 – DYNAMIC MESSAGE SIGN (DMS) FULL MATRIX, FRONT ACCESS LED

		REQUIREMENT	REQUIREMENT
1201: GLOBAL OBJECT (GO) DEFINITIONS			
2.2 - Configuration			
globalSetIDParameter	NTCIP 1201	optional	Yes
globalMaxModules	NTCIP 1201	mandatory	Yes
globalModuleTable	NTCIP 1201	mandatory	Yes
moduleNumber	NTCIP 1201	mandatory	Yes
moduleDeviceNode	NTCIP 1201	mandatory	Yes
moduleMake	NTCIP 1201	mandatory	Yes
moduleModel	NTCIP 1201	mandatory	Yes
moduleVersion	NTCIP 1201	mandatory	Yes
moduleType	NTCIP 1201	mandatory	Yes
2.3 Database Management			
Database Management (ALL)	NTCIP 1201	Optional Group	No
2.4 Time Management			
globalTime	NTCIP 1201	mandatory	Yes
globalDaylightSaving	NTCIP 1201	mandatory	Yes
globalLocalTimeDifferential	NTCIP 1201	mandatory	Yes
maxTimeBaseScheduleEntries	NTCIP 1201	mandatory	Yes
timeBaseScheduleTable	NTCIP 1201	mandatory	Yes
timeBaseScheduleNumber	NTCIP 1201	mandatory	Yes
timeBaseScheduleMonth	NTCIP 1201	mandatory	Yes
timeBaseScheduleDay	NTCIP 1201	mandatory	Yes
timeBaseScheduleDate	NTCIP 1201	mandatory	Yes
timeBaseScheduleDayPlan	NTCIP 1201	mandatory	Yes
maxDayPlans	NTCIP 1201	mandatory	Yes
maxDayPlanEvents	NTCIP 1201	mandatory	Yes
timeBaseDayPlanTable	NTCIP 1201	mandatory	Yes
dayPlanNumber	NTCIP 1201	mandatory	Yes
dayPlanEventNumber	NTCIP 1201	mandatory	Yes
dayPlanHour	NTCIP 1201	mandatory	Yes
dayPlanMinute	NTCIP 1201	mandatory	Yes
dayPlanActionNumberOID	NTCIP 1201	mandatory	Yes
dayPlanStatus	NTCIP 1201	mandatory	Yes
2.7 - PMPP			
maxGroupAddresses	NTCIP 1201	mandatory	Yes
hdlcGroupAddressTable	NTCIP 1201	mandatory	Yes
hdlcGroupAddressIndex	NTCIP 1201	mandatory	Yes
hdlcGroupAddress	NTCIP 1201	mandatory	Yes
1203: OBJECT DEFINITIONS FOR DYNAMIC MESSAGE SIGNS (DMS) MIB			
5.2 - SIGN CONFIGURATION AND CAPABILITY			
dmsSignAccess	NTCIP 1203	mandatory	Yes
dmsSignType	NTCIP 1203	mandatory	Yes
dmsSignHeight	NTCIP 1203	mandatory	Yes
dmsSignWidth	NTCIP 1203	mandatory	Yes
dmsHorizontalBorder	NTCIP 1203	mandatory	Yes
dmsVerticalBorder	NTCIP 1203	mandatory	Yes
dmsLegend	NTCIP 1203	mandatory	Yes
dmsBeaconType	NTCIP 1203	mandatory	Yes
dmsSignTechnology	NTCIP 1203	mandatory	Yes

5.3 - VMS Configuration			
vmsCharacterHeightPixels	NTCIP 1203	mandatory	Yes
vmsCharacterWidthPixels	NTCIP 1203	mandatory	Yes
vmsSignHeightPixels	NTCIP 1203	mandatory	Yes
vmsSignWidthPixels	NTCIP 1203	mandatory	Yes
vmsHorizontalPitch	NTCIP 1203	mandatory	Yes
vmsVerticalPitch	NTCIP 1203	mandatory	Yes
monochromeColor	NTCIP 1203	mandatory	Yes
5.4 - Font Definition			
numFonts	NTCIP 1203	mandatory	Yes
fontTable	NTCIP 1203	mandatory	Yes
fontEntry	NTCIP 1203	mandatory	Yes
fontIndex	NTCIP 1203	mandatory	Yes
fontNumber	NTCIP 1203	mandatory	Yes
fontName	NTCIP 1203	mandatory	Yes
fontHeight	NTCIP 1203	mandatory	Yes
fontCharSpacing	NTCIP 1203	mandatory	Yes
fontLineSpacing	NTCIP 1203	mandatory	Yes
fontVersionID	NTCIP 1203	mandatory	Yes
fontStatusID	NTCIP 1203	mandatory	Yes
maxFontCharacters	NTCIP 1203	mandatory	Yes
characterTable	NTCIP 1203	mandatory	Yes
characterNumber	NTCIP 1203	mandatory	Yes
characterWidth	NTCIP 1203	mandatory	Yes
characterBitmap	NTCIP 1203	mandatory	Yes
fontMaxCharacterSize	NTCIP 1203	mandatory	Yes
5.5 - MULTI Configuration			
defaultBackgroundColor	NTCIP 1203	mandatory	Yes
defaultForegroundColor	NTCIP 1203	mandatory	Yes
defaultFlashOn	NTCIP 1203	optional	No
defaultFlashOnActivate	NTCIP 1203	optional	No
defaultFlashOff	NTCIP 1203	optional	No
defaultFlashOffActivate	NTCIP 1203	optional	No
defaultFont	NTCIP 1203	mandatory	Yes
defaultFontActivate	NTCIP 1203	optional	No
defaultJustificationLine	NTCIP 1203	mandatory	Yes
defaultJustificationLineActivate	NTCIP 1203	optional	No
defaultJustificationPage	NTCIP 1203	mandatory	Yes
defaultJustificationPageActivate	NTCIP 1203	optional	No
defaultPageOnTime	NTCIP 1203	mandatory	Yes
defaultPageOnTimeActivate	NTCIP 1203	optional	No
defaultPageOffTime	NTCIP 1203	mandatory	Yes
defaultPageOffTime	NTCIP 1203	optional	No
defaultCharacterSet	NTCIP 1203	mandatory	Yes
defaultBackgroundRGB	NTCIP 1203	optional	No
defaultBackgroundRGBActivate	NTCIP 1203	optional	No
defaultForegroundRGB	NTCIP 1203	optional	No
defaultForegroundRGBActivate	NTCIP 1203	optional	No
defaultCharacterSet	NTCIP 1203	optional	No
dmsColorScheme	NTCIP 1203	optional	No
dmsSupportedMultiTags	NTCIP 1203	mandatory	Yes

dmsMaxNumberPages	NTCIP 1203	mandatory	Yes
dmsMaxMultiStringLength	NTCIP 1203	mandatory	Yes
5.6 Message Objects			
dmsNumPermanentMsg	NTCIP 1203	mandatory	Yes
dmsNumChangeableMsg	NTCIP 1203	mandatory	Yes
dmsMaxChangeableMsg	NTCIP 1203	mandatory	Yes
dmsFreeChangeableMemory	NTCIP 1203	mandatory	Yes
dmsNumVolatileMsg	NTCIP 1203	mandatory	Yes
dmsMaxVolatileMsg	NTCIP 1203	mandatory	Yes
dmsFreeVolatileMemory	NTCIP 1203	mandatory	Yes
dmsMessageTable	NTCIP 1203	mandatory	Yes
dmsMessageEntry	NTCIP 1203	mandatory	Yes
dmsMessageMemoryType	NTCIP 1203	mandatory	Yes
dmsMessageNumber	NTCIP 1203	mandatory	Yes
dmsMessageMultiString	NTCIP 1203	mandatory	Yes
dmsMessageOwner	NTCIP 1203	mandatory	Yes
dmsMessageCRC	NTCIP 1203	mandatory	Yes
dmsMessageBeacon	NTCIP 1203	optional	No
dmsMessagePixelService	NTCIP 1203	optional	No
dmsMessageRunTimePriority	NTCIP 1203	mandatory	Yes
dmsMessageMsgStatus	NTCIP 1203	mandatory	Yes
dmsValidateMessageError	NTCIP 1203	mandatory	Yes
5.7 Sign Control			
dmsControlMode	NTCIP 1203	mandatory	Yes
dmsSWReset	NTCIP 1203	optional	Yes
dmsActivateMessage	NTCIP 1203	mandatory	Yes
dmsMessageTimeRemaining	NTCIP 1203	optional	Yes
dmsMsgTableSource	NTCIP 1203	mandatory	Yes
dmsMsgRequesterID	NTCIP 1203	mandatory	Yes
dmsMsgSourceMode	NTCIP 1203	mandatory	Yes
dmsShortPowerRecoveryMessage	NTCIP 1203	optional	Yes
dmsLongPowerRecoveryMessage	NTCIP 1203	optional	Yes
dmsShortPowerLossTime	NTCIP 1203	optional	Yes
dmsResetMessage	NTCIP 1203	optional	Yes
dmsCommunicationsLossMessage	NTCIP 1203	optional	Yes
dmsTimeCommLoss	NTCIP 1203	optional	Yes
dmsPowerLossMessage	NTCIP 1203	optional	Yes
dmsEndDurationMessage	NTCIP 1203	optional	Yes
dmsMemoryMgmt	NTCIP 1203	mandatory	Yes
dmsActivateMsgError	NTCIP 1203	mandatory	Yes
dmsMultiSyntaxError	NTCIP 1203	mandatory	Yes
dmsMultiSyntaxErrorPosition	NTCIP 1203	mandatory	Yes
dmsMultiOtherErrorDescription	NTCIP 1203	optional	Yes
vmsPixelServiceDuration	NTCIP 1203	optional	No
vmsPixelServiceFrequency	NTCIP 1203	optional	No
vmsPixelServiceTime	NTCIP 1203	optional	No
dmsActivateErrorMsgCode	NTCIP 1203	optional	No
dmsActivateMessageState	NTCIP 1203	optional	No
5.8 – ILLUMINATION BRIGHTNESS			
dmsIllumControl	NTCIP 1203	mandatory	Yes
dmsIllumMaxPhotocellLevel	NTCIP 1203	mandatory	Yes

dmsIllumPhotocellLevelStatus	NTCIP 1203	mandatory	Yes
dmsIllumNumBrightLevels	NTCIP 1203	mandatory	Yes
dmsIllumBrightLevelStatus	NTCIP 1203	mandatory	Yes
dmsIllumManLevel	NTCIP 1203	mandatory	Yes
dmsIllumBrightnessValues	NTCIP 1203	mandatory	Yes
dmsIllumBrightnessValulesError	NTCIP 1203	mandatory	Yes
dmsIllumLightOutputStatus	NTCIP 1203	optional	Yes
5.9 - SCHEDULING ACTION			
numActionTableEntries	NTCIP 1203	mandatory	Yes
dmsActionTable	NTCIP 1203	mandatory	Yes
dmsActionEntry	NTCIP 1203	mandatory	Yes
dmsActionIndex	NTCIP 1203	mandatory	Yes
dmsActionMsgCode	NTCIP 1203	mandatory	Yes
5.11 - SIGN STATUS			
Core Status			
statMultiFieldRows	NTCIP 1203	mandatory	Yes
statMultiFieldTable	NTCIP 1203	mandatory	Yes
statMultiFieldIndex	NTCIP 1203	mandatory	Yes
statMultiFieldCode	NTCIP 1203	mandatory	Yes
statMultiCurrentFieldValue	NTCIP 1203	mandatory	Yes
dmsCurrentSpeed	NTCIP 1203	optional	No
dmsCurrentSpeedLimit	NTCIP 1203	optional	No
watchdogFailureCount	NTCIP 1203	mandatory	Yes
dmsStatDoorOpen	NTCIP 1203	mandatory	Yes
Controller Status			
shortErrorStatus	NTCIP 1203	mandatory	Yes
controllerErrorStatus	NTCIP 1203	mandatory	Yes
Power Status			
dmsPowerFailureStatusMap	NTCIP 1203	mandatory	Yes
dmsPowerNumRows	NTCIP 1203	mandatory	Yes
dmsPowerStatusTable	NTCIP 1203	mandatory	Yes
dmsPowerIndex	NTCIP 1203	mandatory	Yes
dmsPowerDescription	NTCIP 1203	mandatory	Yes
dmsPowerMfrStatus	NTCIP 1203	mandatory	Yes
dmsPowerStatus	NTCIP 1203	mandatory	Yes
dmsPowerVoltage	NTCIP 1203	mandatory	Yes
dmsPowerType	NTCIP 1203	mandatory	Yes
Climate Controlled Status Data			
dmsClimateCtrlNumRows	NTCIP 1203	optional	No
dmsClimateCtrlStatusMap	NTCIP 1203	optional	No
dmsClimateCtrlStatusTable	NTCIP 1203	optional	No
dmsClimateCtrlIndex	NTCIP 1203	optional	No
dmsClimateCtrlDescription	NTCIP 1203	optional	No
dmsClimateCtrlMfrStatus	NTCIP 1203	optional	No
dmsClimateCtrlErrorStatus	NTCIP 1203	optional	No
dmsClimateCtrlOnStatus	NTCIP 1203	optional	No
dmsClimateCtrlTestActivation	NTCIP 1203	optional	No
dmsClimateCtrlAbortReason	NTCIP 1203	optional	No
dmsClimateCtrlType	NTCIP 1203	optional	No
Pixel Failure Data			
pixelFailureTableNumRows	NTCIP 1203	mandatory	Yes

PixelFailureTable	NTCIP 1203	mandatory	Yes
pixelFailureDetectionType	NTCIP 1203	mandatory	Yes
pixelFailureIndex	NTCIP 1203	mandatory	Yes
pixelFailureXLocation	NTCIP 1203	mandatory	Yes
pixelFailureYLocation	NTCIP 1203	mandatory	Yes
pixelFailureStatus	NTCIP 1203	mandatory	Yes
pixelTestActivation	NTCIP 1203	mandatory	Yes
pixelStatusTable	NTCIP 1203	mandatory	Yes
dmsPixelStatusIndex	NTCIP 1203	mandatory	Yes
dmsPixelStatus	NTCIP 1203	mandatory	Yes
dmsPixelFailureTestRows	NTCIP 1203	mandatory	Yes
dmsPixelFailureMessageRows	NTCIP 1203	mandatory	Yes
Lamp Error Status (ALL)	**NTCIP 1203**	**Optional Group**	**No**
Drum Status Data (ALL)	**NTCIP 1203**	**Optional Group**	**No**
Light Sensor Status Data			
dmsLightSensorStatusMap	NTCIP 1203	mandatory	Yes
dmsLightSensorNumRows	NTCIP 1203	mandatory	Yes
dmsLightSensorStatusTable	NTCIP 1203	mandatory	Yes
dmsLightSensorIndex	NTCIP 1203	mandatory	Yes
dmsLightSensorDescription	NTCIP 1203	mandatory	Yes
dmsLightSensorCurrentReading	NTCIP 1203	mandatory	Yes
dmsLightSensorStatus	NTCIP 1203	mandatory	Yes
Humidity Data (ALL)	**NTCIP 1203**	**Optional Group**	**No**
Temperature Sensor Data			
dmsTempSensorStatusMap	NTCIP 1203	mandatory	Yes
dmsTempSensorNumRows	NTCIP 1203	mandatory	Yes
dmsTempSensorStatusTable	NTCIP 1203	mandatory	Yes
dmsTempSensorIndex	NTCIP 1203	mandatory	Yes
dmsTempSensorDescription	NTCIP 1203	mandatory	Yes
dmsTempSensorCurrentReading	NTCIP 1203	mandatory	Yes
dmsTempSensorHighWarningTemperature	NTCIP 1203	mandatory	Yes
dmsTempSensorHighCriticalTemperature	NTCIP 1203	mandatory	Yes
dmsTempSensorLowCriticalTemperature	NTCIP 1203	mandatory	Yes
dmsTempSensorStatus	NTCIP 1203	mandatory	Yes
dmsTempSensorHighestCriticalTempThreshold	NTCIP 1203	mandatory	Yes
dmsTempSensorLowestCriticalTempThreshold	NTCIP 1203	mandatory	Yes
Power Status Objects			
signVolts	NTCIP 1203	mandatory	Yes
lineVolts	NTCIP 1203	mandatory	Yes
powerSource	NTCIP 1203	mandatory	Yes
Temperature Status	**NTCIP 1203**	**Optional Group**	**Yes**
5.12 - GRAPHIC DEFINITION			
Graphic Definition Objects (ALL)	**NTCIP 1203**	**Optional Group**	**No**

DOCUMENTATION:

Full documentation of proposed sign equipment, specifications and assembly details, including posts and equipment cabinet, shall be provided to the Engineer for approval.

Software shall be supplied with full documentation, including a CD-ROM containing ASCII versions of the following Management Information Base (MIB) files in Abstract Syntax Notation 1 (ASN.1) format:

- The relevant version of each official standard MIB Module referenced by the device functionality.
- If the device does not support the full range of any given object within a Standard MIB Module, a manufacturer-specific version of the official Standard MIB Module with the supported range indicated in ASN.1 format in the SYNTAX and/or DESCRIPTION fields of the associated OBJECT TYPE macro shall be provided. The filename of this file shall be identical to the standard MIB Module, except that it shall have the extension ".man".
- A MIB Module in ASN.1 format containing any and all manufacturer-specific (or agency-specific) objects supported by the device with accurate and meaningful DESCRIPTION fields and supported ranges indicated in the SYNTAX field of the OBJECT-TYPE macros.
- A MIB containing any other objects supported by the device.

INTELLECTUAL PROPERTY RIGHTS:

The manufacturer shall allow the use of any and all of this documentation by any party authorized by the Procuring Agency for systems integration purposes at any time initially or in the future, regardless of what parties are involved in the systems integration effort.

CENTRAL SOFTWARE:

Unless otherwise specified in the contract plans, the Contractor shall supply DMS central control software necessary to interface sign functions remotely from the TMC. All control software shall be delivered on CD-ROM and installed on the DMS computer and workstations as directed by the TMC manager. The TMC should be contacted for specifics of the communications protocols and software in place.

The software shall be of a client-server design, in which users can connect to, configure, monitor, and control signs from workstations in the TMC and also from workstations connected to the DMS computer by a TCP/IP 100-BaseT network. Some workstations may use dial-up telephone lines or other low-speed connections to reach the network via the LAN server. The DMS computer shall communicate with the signs via either multipoint EIA-232 communication channels or over TCP/IP Ethernet protocol. The DMS central software shall support at least 30 users and workstations, and 100 signs.

The software shall provide the following capabilities to users at the workstations and DMS computer:

1. See a list of messages stored in the sign or on the sign controller with an indication of which is currently being displayed on the monitor screen exactly as it appears to motorist.
2. Cause a different message to be displayed.
3. Upload and download new message files between the sign controllers and the DMS computer.
4. Automatically detect malfunctions, including loss of communication or power, and errors.
5. Create and edit fonts and messages and storing them on the DMS computer's disk drive for subsequent downloading to one or more signs.
6. Create an activity log for all signs.
7. Allow existing, or future, NTCIP based signs to be incorporated, configured, controlled, and monitored.
8. On screen notification/alarm of cabinet door open, malfunctions, errors, and out of range environmental conditions.

CONSTRUCTION DETAILS

The DMS will be installed on either new or existing sign posts or overhead structures as shown in the contract documents. Posts, post foundations, and other supporting structures shall be paid for under other contract items as shown in the plans.

Installation Certification

All controller(s), LED display modules, and mounting hardware shall be installed in accordance with manufacturer's instructions and recommendations. To ensure the sign was installed properly the Contractor shall submit to the Engineer documentation which that states either a.) the manufacturer, or the manufacturer's authorized supplier, verifies that the Contractor has been trained on the installation, operation, testing and maintenance of the equipment or b) provides documentation from the manufacturer that the installation has been inspected and approved by the manufacturer or authorized representative.

Testing Requirements

Test Plan:
The manufacturer shall provide a test plan, 30-days prior to each test, for review and approval by the Engineer, for each of the three types of acceptance testing required: Factory Acceptance Testing, Stand-alone Acceptance Testing, and System Acceptance Testing.

The test plans shall clearly identify each function and element being tested, the setup conditions, the steps to be followed during the test, and the anticipated test results. The test plan shall exercise all required functions and capabilities under this item.

The following is a typical, but non-exhaustive list of the type of requirements that the test plan shall verify:

- Downloading, uploading, displaying, entering, editing, and deleting sign messages and fonts.
- Displaying of all characters, all messages, and all symbols on the sign.
- Switching between several different messages and flashing a part of a message.
- Recovery from simulated communications errors, simulated watchdog timer errors, and simulated sign controller errors.
- Demonstration of the operation of the thermostatically controlled fans, automatic LED temperature shutdown and dimming, and environmental warnings.
- Demonstration of automatic restart after a simulated short-term and simulated long-term power failure.
- Demonstration of the operation of the variation of the LED intensity based on various levels of ambient light.

Test Equipment:
The test plan shall identify all equipment required to perform the tests. This equipment shall be provided by the Contractor for the duration of the testing program. As a minimum, functional testing equipment shall include the latest version of the Device Tester for NTCIP, software by Intelligent Devices Inc, or approved equal.

Test Performance:
The test shall be coordinated with NYSDOT at least three (3) weeks prior to the actual date. The Contractor shall conduct all tests, in the presence of the Engineer and/or up to two (2) other representatives. The Engineer may waive the right to witness certain tests. The utilized software shall be in recording/capturing mode while performing the test procedures.

Test Reports:
The Contractor shall maintain a complete record of each test performed including the results of the test and a record of who witnessed the test. At the completion of each test, the test documentation shall be completed and provided to the Engineer for review. This documentation shall be the basis for acceptance or rejection by the Engineer. All test reports shall be signed by the Contractor's authorized testing representative.

Test Failure:
The unit shall be corrected or another unit substituted in its place and the test successfully repeated. The substitute unit shall have passed all other tests successfully. If any DMS equipment or software/firmware modifications are necessary as a result of any test or demonstration failure, full retesting for compliance with these specifications may be required and a test report shall be prepared and delivered to the Engineer prior to retesting of the equipment. The report shall describe the nature of the failure and corrective action taken. If a failure pattern, as defined by the Engineer, develops, the Engineer may direct that design and construction modifications be made to all units without additional cost to the State, other involved agencies, or extension of the contract period.

ITEM 683.93XXYZ04 – DYNAMIC MESSAGE SIGN (DMS) FULL MATRIX, FRONT ACCESS LED

Test Specifics:

1. On-Site Stand-Alone and System Performance Test:
   The Contractor shall conduct approved stand-alone tests of the equipment installed in the field and at the TMC. The tests shall, as a minimum, exercise all stand-alone (non-network) functional operations of the field equipment, including NTCIP compliance, and TMC equipment and software with all the equipment installed per the plans as directed by the Engineer. Approved data forms shall be completed and turned over to the Engineer as the basis for review and rejection or acceptance.

   Each unit of equipment shall be operated long enough to permit equipment temperature stabilization, and to check and record an adequate number of performance characteristics to ensure compliance with the requirements of this specification. The test shall, as a minimum, exercise all the input and output functions of the unit and demonstrate all operational features.

   Following successful completion of the On-Site Stand-Alone tests the entire complement of subsystems and equipment shall be integrated into one system. Interface tests shall then be performed to verify the transfer of information between field equipment elements and the TMC.

   System performance testing shall exercise all functional operations of each unit of field equipment from the TMC, and demonstrate compliance with all contract requirements. The tests shall include multiple combinations of functions including infrequent combinations, input validation, and stress testing. Compliance with all performance requirements shall be demonstrated. Where there are multiple units of the same item of equipment used, compliance with performance parameter requirements may be demonstrated on sample units with approval of the Engineer.

2. 90-Day Operational Test:
   Following successful completion of the system performance tests, a 90-calendar day test shall be performed. The test shall start at the same time for all system elements unless a waiver is received from the Engineer.

   The purpose of the Operational Tests is to demonstrate the reliability of system equipment for a 90 day period. In the event of a failure of any contractor supplied components, or of any existing system elements that may be affected, that portion of the system shall be subjected to an additional 30 day test period. Failure shall be defined as any interruption of operation that can be contributed to the DMS components. If a failure occurs, the test shall be stopped until the failure has been resolved. If the same failure occurs three (3) times, the failure shall be resolved and the 90-day test shall begin anew.

   In the event that greater than 20% of similar equipment items malfunction during the test

period, the Engineer may declare a system defect and require replacement of all items of that equipment. When a system defect is declared, the 90 day test period shall be restarted for the affected equipment after replacement.

During the Operational Test period the Contractor shall provide support for all installed equipment including problem troubleshooting and replacement of items not operating as specified. The Contractor shall maintain detailed daily records in the form of a maintenance and activity log. The log shall include the identity of equipment on which work is performed, the cost of equipment malfunction, if any, a description of the work performed, materials or special equipment used and the time required to complete the activity. The log shall contain the current test status of all equipment items. The maintenance and activity log shall be available to the Engineer upon request.

The final acceptance shall be based on the satisfactory completion of all 90-Day tests.

Training Requirements:

Contractor Training:

Prior to the installation of any specified equipment, the Contractor's personnel shall have received training from the supplier on installation, operations, testing and maintenance of all equipment. No equipment will be accepted without detailed documentation from the equipment supplier certifying that the training has taken place.

NYSDOT Training:

Unless otherwise specified on the contract plans, the contractor and/or DMS manufacture shall be responsible for providing a one (1) day training seminar in the operations and maintenance of the DMS for NYSDOT management, engineering, operations, and maintenance personnel. The contractor shall contact the Engineer to verify the requirements and number of personnel scheduled for training. Training sessions shall be conducted at the TMC and in the field, consisting of both classroom and "hands-on" training using installed system equipment. Training shall not exceed 8 hours with a maximum of twelve students. The Contractor shall submit two copies of the course outline, training materials, and instructors' qualifications to the Engineer for approval 30 calendar days prior to the anticipated start of training. Following approval of the material the Contractor shall submit enough copies of the course material for use by the NYSDOT during the training program.

The costs for instructors, course materials, handouts, etc. shall be included in the costs of this item. No separate payment for training will be made to the Contractor.

METHOD OF MEASUREMENT

The DMS will be measured for payment as each unit installed, tested, and made fully operational.

BASIS OF PAYMENT

The unit price bid for each DMS shall include the cost of furnishing all labor, materials, tools, software, equipment and incidentals as necessary to complete the work. This includes hardware necessary for mounting the DMS to the support structure.

Communications devices and associated patch cords will be paid under separate bid items.

Primary sign support structures such as heavy posts, concrete foundations, bridge mount frames, and other structures supporting the sign shall be paid for under other contract items as shown on the contract plans.

XX = Number of Characters Per Line (based on 18" character height)
- **08 = 8 CHARACTER**
- **10 = 10 CHARACTER**
- **18 = 18 CHARACTER**

Y = Number of Lines (based on 18" character height)
- **1 = 1 LINE**
- **2 = 2 LINES**
- **3 = 3 LINES**

Z = Main Power Requirements
- **1 = AC**
- **2 = SOLAR (DC)**

Progress payment will be made as follows:

Fifty percent (50%) of the bid price of each item will be paid when it is installed.

Forty percent (40%) of the bid price will be paid upon satisfactory completion of the On-Site Stand-Alone and System Performance Test.

Ten percent (10%) of the bid price will be paid upon satisfactory completion of the 90 Day Operational Test.

ITEM 683.95010011 - MPEG-4 VIDEO ENCODER, SINGLE CHANNEL
ITEM 683.95020011 - MPEG-4 VIDEO ENCODER, DUAL CHANNEL
ITEM 683.95030011 - MPEG-4 VIDEO DECODER, EIGHT CHANNELS

DESCRIPTION

This work shall consist of furnishing and installing an MPEG-4 Video Encoder, Single or Dual Channel unit and an MPEG-4 Video Decoder, Eight Channel unit, herein called the Encoder and the Decoder, in accordance with the contract documents and as directed by the Engineer.

The Encoder device converts NTSC analog video format into MPEG-4 digital video signals and transmits over an Ethernet network. The Decoder device receives eight (8) remote digital video signals in MPEG-4 format and converts them back into their original supported analog video format typically NTSC. They shall be manageable remotely utilizing a typical web based user interface over an IP network. The Encoder and Decoder shall incorporate a serial data terminal server for RS-232/422/485 type bi-directional data channels from a minimum of two (2) devices and multiple devices respectfully.

The Encoder and the Decoder shall be fully compatible with one another and from the same manufacturer.

MATERIALS

Functional Requirements for both Devices each separately

- Minimum of one (1) full duplex 10/100Base-TX interface, RJ-45 Female for accessing the Ethernet network.
- Web-base user interface for local management via Fast Ethernet port or remote via Ethernet network.
- They shall be new
- They shall be furnished under the same contract and shall be of the same manufacturer.

Functional Requirements for the Encoder only

The Encoder shall encode one (1) or two (2) real-time NTSC video inputs and two (2) sources of serial data via a Fast Ethernet network.

- Minimum of one (1) or two (2) NTSC inputs, BNC Female
- Minimum of two (2) RS-232/422 bi-directional data channels, RJ-45 Female

Functional Requirements for the Decoder only

The Decoder shall decode eight (8) MPEG-4 real-time video inputs and multiple sources of serial data via a Fast Ethernet network.

- Minimum of eight (8) NTSC, BNC Female
- Minimum of one (1) RS-232/422/485 bi-directional data channel, RJ-45 Female capable of access multiple serial data sources

Environmental and Physical Conditions

The devices shall be environmentally field-hardened for rugged environments, suitable for indoor use, and offer several mounting options.

- NEMA TS-1 and TS-2 Certified (for the Encoder)
- DIN Rail mountable (for the Encoder)

- Rack (1U high, 19" wide) mountable (for the Decoder)
- -22°F to 158°F (Operating Temperature)
- Humidity: 10% to 90% Non-Condensing
- Meet FCC EMC compatibility

Standards and Protocol Compliance

The Encoder and the Decoder shall comply with the latest standards and protocols for a field deployable real time video encoder and decoder respectively.

- They shall support IP Protocol for video (RTP/UDP/IP multicast and unicast) and data (UDP/IP for multicast and TCP/IP for unicast)
- Management – SNMP, HTTP, CLI (Local via Ethernet port, Remote via Telnet), DHCP, SSH, SSL
- Bit Rate –6Mbps adjustable (The Decoder shall automatically adjust to the encoder rate)
- Resolution – QCIF, CIF, 2CIF, 4CIF, PAL D1 & NTSC
- Frame Rate – 1 to 30 fps NTSC adjustable
- Encoder Performance – 1 or 2 Channels ea @ 30 fps NTSC
- Decoder Performance – 8 Channels ea @ 30 fps NTSC
- The Decoder latency shall be less than 100 milliseconds and the end to end video latency shall not exceed 250 milliseconds in order to maintain real time pan, tilt, and zoom control.
- Compliance with IEEE 802.3 10Base-T and IEEE 802.3u 100Base-TX

Power

The devices shall utilize existing power available at installed location shown on the plans or as directed by the Engineer.

- The external AC Power supply and duplex receptacle plug shall be adequately secured in the cabinet
- DC Supply Voltage, 12V nominal
- The Encoder Power consumption shall be 10W maximum
- The Decoder Power consumption shall be 25W maximum
- Meet FCC EMC requirements

CONSTRUCTION DETAILS

The Contractor shall prepare a shop drawing detailing the complete Encoder/Decoder installation, including all components to be supplied, mounting details and interface cables. The shop drawing should indicate the device's IP address and Netmask address as supplied by the Engineer.

The Contractor should install the Encoder using a Standard mount configuration. The Contractor should install the Decoder using a rack mount configuration. The Contractor shall follow the manufacturer's installation instructions, and shall make all the appropriate connections necessary to satisfy the Engineer.

The Contractor shall initially set the Encoder at 4Mbps, 4CIF, and 30fps. The Decoder should automatically configure to the Encoder settings. The Contractor shall verify and make configuration adjustments if required.

ITEM 683.95010011 - MPEG-4 VIDEO ENCODER, SINGLE CHANNEL
ITEM 683.95020011 - MPEG-4 VIDEO ENCODER, DUAL CHANNEL
ITEM 683.95030011 - MPEG-4 VIDEO DECODER, EIGHT CHANNELS

It is the Contractor's responsibility to configure the device and test for full operation as intended herein and as directed by the Engineer.

General:
The Contractor shall install the specified field equipment at locations shown on the plans and as directed by the Engineer. The equipment shall be installed on both existing poles and structures, new poles furnished under this contract and within equipment cabinets furnished and installed under other contract items.

All incidental parts which are necessary to complete the installation, but are not specified herein or on the plans, shall be provided as necessary to provide a complete and properly operating system.

Documentation, testing and training requirements as found applicable is specified within the Special Notes of the proposal.

All components supplied under this specification shall be warrantied in accordance with Section 105-18, Warranties and Guarantees of the Standard Specification.

The Contractor shall provide a Test Procedure Check list for review and approval to the Engineer. The Operational Stand Alone Test shall be conducted based on the approved Test Procedure Check List.

The MPEG-4 Video Encoders and Decoders shall be integrated using the philosophy and procedures of the Bid Item for ITS System Integration, System Test Procedures or as indicated in the Project Special Note(s) or the Plans.

METHOD OF MEASUREMENT

This item shall be measured for payment by the actual number of MPEG-4 Video Encoders and Decoders installed, activated, tested, and accepted.

BASIS OF PAYMENT

This item shall be paid for at the contract unit price each MPEG-4 Video Encoder and Decoder for which price shall include all equipment, material, testing, documentation, and labor detailed in the contract documents.

Progress payments will be made in the following percentages of the bid price for each item after each milestone is reached. See System Integration specification for definition of milestones.

Approval of Shop Drawings	10%
Installation of Assembly at Job Site	40%
Operational Stand-Alone Test of Assembly	40%
System Acceptance (See System Integration)	10%

ITEM 683.95050010 – ETHERNET SWITCH

DESCRIPTION:

The Contractor shall furnish and install an Ethernet Switch of the type designated in the Contract Documents and as ordered by the Engineer. Ethernet Switches are used to connect several field devices with Ethernet communications interfaces to the 10/100 Mbps Ethernet network either existing or furnished as part of this project. The Ethernet switches shall be installed in the field equipment cabinets as designated on the plans.

MATERIALS:

All material furnished, assembled, fabricated or installed shall be new, corrosion resistant and in strict accordance with all the details shown in the Contract Documents and in these Special Specifications.

The equipment furnished as part of these items shall meet the following requirements:

All equipment furnished under these items shall:

1. Be from the same manufacturer
2. Not require manual adjustment

The Ethernet Switches shall meet the following requirements:

Network Requirements

Operating System	Plug and Play. Automatic learning, negotiation, and crossover detection. Port Rate Limiting and Broadcast Storm Limiting Port Configuration, Status, Statistics, Mirroring and Security Loss of Link Management on Fiber Ports
IEEE Compliance	802.3-10BaseT 802.3u-100BaseTX 802.3d-MAC Bridges 802.1d-Spanning Tree Protocol 802.1p-Class of Service 802.1q-VLAN Tagging 802.1w-Rapid Spanning Tree Protocol
Ethernet Ports	(6) 10/100BaseTX, Minimum

ITEM 683.95050010 – ETHERNET SWITCH (Continued)

Switch Properties	Store and Forward Switching Method 5us (100Mbps) Switching Latency 1.6Gbps Switching Bandwidth 8192 MAC Addresses 2 Priority Queues 160 Packet Buffers (1536 each) Frame Buffer Memory 1000 VLans 256 IGMP Multicast Groups
Network Mgmt.	Web Based Graphical HTML SNMP v1, v2c Telnet, VT100 Command Line Interface (CLI)

Indicators

Per Port	Link and Activity LEDS
Power	Power status indicator

EMI Immunity and Environmental

IEC Compliance	61000-6-2 Industrial 61800-3 Industrial 61850-3 Electric Utility Substations
IEEE Compliance	1613 Electric Utility Substations
NEMA Compliance	TS-2 Traffic Control Equipment
Temperature	-40°F to + 185°F (No Fan)
Humidity	0 to 95% non-condensing

Electrical Requirements

Voltage	115 ± 20 VAC. An adapter may be used to provide the required power.

Power Consumption	20W max.
Protection	Resettable circuit breakers or fuses shall be provided to protect the equipment. The protection may be provided either as part of the cabinet wiring or on the equipment. All equipment shall be hot swappable.

Mechanical

Dimensions	2” (Height) x 8” (Width) x 10” (Depth), Maximum
Mounting	Shall be suitable for mounting on a shelf or attached to a wall of the cabinet

CONSTRUCTION DETAILS:

The Contractor shall install the Ethernet data transceivers in the equipment cabinets designated on the plans. The Ethernet Switches shall be connected to Field equipment and the Ethernet network communication equipment thru cables furnished as part of this item.

Documentation Requirements

Six (6) advance copies of equipment manuals furnished by the manufacturer shall be submitted to the Engineer for review at least ten-days prior to the scheduled start of the first Operational Stand-Alone Test. The Engineer will verify the manufacturer’s equipment manual as part of the test and integration process. The equipment manual incorporating the Engineer’s corrections and comments shall be integrated by the Contractor into the operations and maintenance manual as described in the General Requirements. The manuals shall, as a minimum, include the following:

a. Complete and accurate schematic diagrams

b. Complete installation and operation procedures

c. Complete performance specifications (functional, electrical, mechanical and environmental) of the unit.

d. Complete list of replaceable parts including names of vendors for parts not identified by universal part numbers such as JEDEC/ RETMA or EIA.

e. Complete maintenance and troubleshooting procedures.

Testing Requirements

After installation of the equipment in the field and prior to integration of the equipment into the system, the Contractor shall perform an Operational Test in the field for each of the Ethernet Switches installed. The test shall demonstrate as a minimum the ability of the switch to connect each field device to the existing or new Ethernet network equipment and transmit and receive Ethernet data between each of the field equipment and field hub or central as applicable.

If the Operational Test fails, the equipment shall be repaired and the test shall be rerun for that site. If a component has been modified as a result of a failure, that component shall be replaced in all like units and the test shall be rerun for each unit.

METHOD OF MEASUREMENT:

The Ethernet Switches will be measured for payment as the number of each specified in the Contract Documents satisfactorily installed.

BASIS OF PAYMENT:

The unit price bid for each Ethernet Switch shall include the cost of furnishing all labor, materials and tools and equipment necessary to complete the work and to make the Ethernet Switch fully operational and tested.

Payment for all documentation, testing and test equipment shall be included under this item.

Progress payment will be made as follows:

- Forty percent of the bid price for each item will be paid upon satisfactory completion of the operational Test for the local communications links from field cabinet to Hub cabinet and from Hub cabinet to Hub cabinet.

- Twenty-five percent of the bid price for each item shall be paid upon successful completion of the Communications Network Performance Verifications Test for an Ethernet rather than T-1 network as described in the Special Note for the project.

- Twenty-five percent of the bid price shall be paid upon successful completion of the Remote Equipment Group Verification Test described in the Special Note for the project.

- Ten percent of the bid price will be paid upon system acceptance.

ITEM 683.96100305 – POWER DISTRIBUTION UNIT

1. DESCRIPTION:

1.1 Under this item the Contractor shall furnish, test and install a Power Distribution Unit (PDU) as per the contract documents and or as directed by the Engineer.

2. MATERIALS:

2.1 Mechanical Requirements;

2.1.1 The Contractor shall provide all components, peripheral equipment, interfacing apparatus (hardware and software), system wiring and networking, mounting hardware, and any other materials necessary to complete the installation as described in the contract documents as being included in the work under this section.

2.1.2 The Contractor shall supply make and model of PDU as described in the contract documents, or approved equal.

2.1.3 All materials supplied shall bear the manufacturer's identifying markings in order to positively identify products approved for use.

2.1.4 The person performing the installation and configuration activities shall have the following certifications and experience;

2.1.4.1 Five years of established experience in the installation and configuration of similar electrical and network devices, and shall have gained such experience working on a minimum of three projects of equal or greater size as this project.

2.1.4.2 Certification of competency from the equipment manufacturer.

2.2 Material Acceptance Requirements;

2.2.1 The contractor shall submit to the Engineer, manufacturer's specification sheets with the model specified and manufacturer's certification that the material supplied meets the requirements stated in the contract documents.

2.2.2 At the time of delivery to the job site, the contractor shall bench test all capabilities of each PDU in the presence of the Engineer and the Regional ITS Coordinator for proof of supplied operability.

2.2.3 The contractor shall submit the manual for the PDU and a list of PDU serial numbers and corresponding installation locations to the engineer prior to bench testing the equipment.

2.2.4 The contractor shall label all materials with the installation location, and then perform a visual inspection of all material for Engineer approval.

2.2.5 The contractor shall provide to the engineer all required experience and certification documentation for the personnel who will be performing installation and configuration activities.

2.2.6 The contractor may propose, for approval by the Regional ITS Coordinator, materials equal to the materials specified in the contract documents. If equal materials are proposed, the contractor shall provide

the following materials, documentation, and labor at no cost to the State, for review, testing, and approval;

2.2.6.1 Two fully functional demonstration models of the same configuration and capabilities of the proposed material, for a period of not less than 60 days, for the purposes of bench top and live testing. The State shall not be liable for any damage to the materials during the testing period.

2.2.6.2 Manufacturer's documentation stating the functional capabilities and configuration of the proposed material, installation manuals, warranty information, any diagnostic software or tools required to maintain the materials.

2.2.6.3 Manufacturer’s certification that the proposed materials meet or exceed the specifications for the proposed material.

2.2.6.4 Full and direct manufacturer and contractor support, during the testing period. This includes, but is not limited to, demonstration tests, training, documentation, use of contractor or manufacturer owned peripheral equipment or facilities required for testing.

2.2.7 Any failure of the proposed material to satisfactorily equal the model described in the contract documents, either in functional testing or by documented characteristic shall constitute a disapproval of the proposed material.

2.2.8 The contractor has the option of repairing or altering materials which have been disapproved and resubmitting the material for re-testing.

2.2.9 Any proposal to substitute materials in place of the materials stated in the contract documents made by the contractor, and subsequent supply of materials, testing, and review by the State as a result of that proposal shall not constitute a justification for extension of time or payment of additional work.

3. CONSTRUCTION DETAILS:

3.1 Construction Installation;

3.1.1 All materials shall be installed in the locations specified in the contract documents and in accordance with the manufacturer’s recommended installation procedures, and the contract documents.

3.1.2 The contractor shall install each PDU in a consistent location in each like cabinet, and connect communications cables to each port as specified in the contract documents.

3.1.3 The PDU and all cables, shall be neatly installed, coiled, and secured in accordance with the manufacturer’s recommended installation procedures.

3.1.4 The PDU shall be installed in a manner to prevent communications cable tangling, pinch points, abrasion, micro-bending, tension, compression, or snagging during maintenance operations.

3.1.5 The contractor shall protect all port adaptors from foreign material at all times and shall maintain dust caps on all adaptors except when removal is required to complete connections.

3.1.6 The contractor shall install the PDU with the exact configurations tested as part of the materials acceptance requirements. Any changes to the configurations during installation shall be approved by the Regional ITS Coordinator, and documented by the contractor.

3.2 Construction Acceptance Requirements;

3.2.1 Once installed, the Contractor, in the presence of the Engineer, shall inspect attached cabling, mounting, and PDU for mechanical operability, secure mounting, safe cable routing, and any signs of physical damage. Any sign of installation not consistent with the contract documents shall be repaired or replaced to the Engineer's satisfaction prior to construction acceptance.

3.2.2 Once installed, the Contractor, in the presence of the Engineer, shall confirm the setting of each configuration documented in the material acceptance requirements and record any changes made.

3.2.3 The contractor shall then test the communications link and power distribution and interruption functions of the PDU from a central network switch as directed by the Engineer to the PDU though the PDU manufacturer's utility.

3.2.4 Any network functional value, measured below the value specified as a minimum by the PDU manufacturer, which is attributable to the PDU being tested, shall be considered non-compliant with this specification and shall be repaired or replaced to the Engineer's satisfaction prior to construction acceptance.

4. METHOD OF MEASUREMENT:

4.1 The unit price bid for each unit shall include procurement, storage, installation, electrical wiring connected to the unit, configuration, support, labeling, and all testing required to complete the work as per the contract documents. All units shall be measured as one each regardless of installation, wiring, configuration, or support required by the contract documents or site conditions.

5. BASIS OF PAYMENT:

5.1 The price bid for each item shall include the cost of furnishing all equipment, associated materials, incidentals, labor, tools, testing equipment, integration support, and testing required for completion of the work described in the contract documents.

5.2 Payment for each item will be made on a partial payment staged basis as follows:

Milestone No.	Description	Payment Percentage
1	Materials Acceptance	40%
2	Construction Acceptance	60%

ITEM 685.1X010004 - EPOXY PAINT WITH WET-NIGHT REFLECTIVE ELEMENTS, 20 MILS (GROOVED PAVEMENT METHOD)

DESCRIPTION

Under this work the contractor shall install grooves at locations where long-line pavement markings will be applied on asphalt pavements, at locations given in the contract documents and as directed by the Engineer, in accordance with this specification. Apply epoxy pavement markings within the grooves with a combination of wet-night reflective elements and standard glass beads in accordance to this specification, the contract documents, the MUTCD with the NYS supplement and as directed by the Engineer.

MATERIALS

Materials shall conform to the requirements of §727-03 White and Yellow Epoxy Reflectorized Pavement Markings and of §727-05 Glass Beads for Pavement Markings.

Wet-Night Reflective Elements:

The Wet-Night Reflective Elements shall be composed of microcrystalline ceramic beads and designed to be applied to epoxy pavement marking paint. The ceramic elements shall have a minimum index of refraction of 2.30 when tested using the liquid oil immersion method. The ceramic beads shall be either clear or yellow tinted as required. For white stripes, 3M Series 70E ceramic beads or approved equal shall be used. For yellow stripes, 3M Series 71E ceramic beads or approved equal shall be used.

Packaging and Shipment. Shipped and packaged in accordance with commercially accepted standards. Clearly display the name of the product, the name and address of the manufacturer, the quantity of material, the date of manufacture, and the date of expiration or the shelf life, on each container or on the shipping invoice.

Basis of Approval. Approvals will be based upon independent lab analysis and field testing in accordance to this specification and Department directives. The Contractor shall submit independent lab analysis to Director of Materials and arrange for field testing through the General Engineering Section of the Materials Bureau. If the product passes the requirements of this specification, it will be added to the Department's Approved List.

Basis of Acceptance. Epoxy Paint and Glass Beads for Pavement markings will be accepted on the basis of the appearance of the product on the Department's Approved List. Wet-Night Reflective Elements will be accepted based on manufacturer's certification that the product meets the requirements of this specification.

ITEM 685.1X010004 - EPOXY PAINT WITH WET-NIGHT REFLECTIVE ELEMENTS, 20 MILS (GROOVED PAVEMENT METHOD)

Grooving Equipment:
Equipment used for grinding in grooves shall meet the following minimum requirements:

- Free-floating cutting or grinding head providing a consistent groove depth over irregular pavement surfaces.
- Diamond saw blades, steel star cutters and/or carbide tipped star cutters.

Epoxy Paint Application Equipment

Mobile applicating equipment for the placement of epoxy reflectorized pavement markings shall be approved by the Director (Materials Bureau) prior to the start of work.

In general, a mobile applicator shall be a truck mounted, self–contained pavement marking machine, specifically designed to apply epoxy resin materials and reflective glass spheres in continuous and skip–line patterns. The applicating equipment shall be maneuverable to the extent that straight lines can be followed and normal curves can be made in true arc. In addition, the truck mounted unit shall be provided with accessories to allow for the marking of legends, symbols, crosswalks, and other special patterns.

At any time throughout the duration of the project, the Contractor shall provide free access to his/hers epoxy applicating equipment for inspection by the Engineer or his authorized representative.

The Engineer may approve the use of a portable applicator in lieu of mobile truck mounted accessories for use in applying special markings only, provided such equipment can demonstrate satisfactory application of reflectorized epoxy markings in accordance with these specifications. The applicating equipment shall be capable of installing a minimum of 100,000 feet of epoxy reflectorized pavement markings in an eight hour day and shall include the following features:

1. Individual tanks for the storage of Part A and Part B of the epoxy resin.

2. Individual tanks for the storage of Standard Glass beads for epoxy paint and Wet-Night Reflective Elements. Each tank shall have a minimum capacity of 3000 lbs.

3. Heating equipment of sufficient capacity to maintain the individual epoxy resin components at the manufacturer's recommended temperature for spray application.

4. Individual dispensers for the simultaneous application of Standard Glass Beads for epoxy paint and Wet-Night Reflective Elements. Each dispenser shall be capable of applying spheres at a minimum rate of 10 lbs/gal of epoxy resin composition.

5. Metering devices or pressure gauges on the proportioning pumps, positioned to be readily visible to the Engineer.

6. All necessary spray equipment, mixers, compressors, and other appurtenances for the placement of epoxy reflectorized pavement markings in a simultaneous sequence of operations as described in Construction Details of this specification.

Supply the Engineer with two accurate, easily readable gauges with which to verify groove depth. The gauges shall be delivered no less than one week prior to the anticipated beginning of grooving operations. Gauges shall be accompanied by manufacturer's instructions for their use, if such instructions are necessary for proper understanding of the gauge's function.

CONSTRUCTION DETAILS

General

Before any pavement marking work is begun, contractor shall submit a schedule of operations for the approval of the Engineer.

At least five (5) days prior to the start or work, the Contractor shall provide the Engineer with the manufacturer's written instructions for:

- Grinding pavement
- Applying epoxy paint with wet-night reflective elements including but not be limited to, material mixing ratios and application temperatures

The Contractor shall provide and retain an on site manufacturer's representative to provide guidance regarding the grooving equipment, construction methods, and oversight of wet-night reflective elements application. The services of the manufacturer's representative shall be retained by the Contractor until the release by the Engineer.

When grinding and pavement markings operations are carried out under traffic, the Contractor shall provide all necessary flags, markers, signs, etc. in accordance with the MUTCD to maintain and protect traffic, and to protect marking operations and the markings until thoroughly set as per manufacturer's procedures.

Grooving Operation

Do not grind grooves over longitudinal pavement joints. Locate the grooves at least 4 to 5 in. away from longitudinal pavement joints when possible.

ITEM 685.1X010004 - EPOXY PAINT WITH WET-NIGHT REFLECTIVE ELEMENTS, 20 MILS (GROOVED PAVEMENT METHOD)

Install wet-reflective epoxy in such a manner as to prevent damage to the surrounding pavement or pavement joints. Repair all damaged pavement surfaces that result from improper installation, or installation of wet-reflective epoxy in unauthorized areas. Remove and repair damaged pavement surfaces to meet the pavement condition prior to grinding areas at no additional cost to the State. Groove edge lines, skip lines and double center lines at the locations specified in the contract documents. Mill, grind or cut a groove of the following dimensions, into the pavement:

Groove Width:	Pavement Marking Width plus 1 inch.
	5 in. width for 4 in. markings
	7 in. width for 6 in. markings
Depth:	0.080 in. ± 0.020 in.

Conduct pavement cutting operations and pavement cleaning work in such a manner as to minimize airborne dust and similar debris and prevent a hazard to workers, motor vehicle operation, or nuisance to property.

Verify the specified groove depth at the start of the grooving operation and periodically throughout the operation. Regrind areas where any groove depth measurement does not meet the minimum specified depth. Grooves that exceed the specified maximum shall be repaired to the satisfaction of the Engineer at no additional cost to the State. This may include relaying a full width section of pavement as deemed necessary by the Engineer.

When necessary, establish marking line points at thirty (30) ft intervals throughout the length of the pavement or as directed by the Engineer.

Wet Saw Blade Operation:
When water is used to cool the saw blades, flush the groove with high pressure water immediately following the cut to avoid build-up and hardening of the slurry in the groove. Allow the surface to dry, to satisfaction of the Engineer, before application of any pavement markings. If the Engineer determines that the groove surfaces have become contaminated during the dry time, it must be cleaned again as per this specification.

Dry Saw Blade Operation:
After grooving with dry saw blades, immediately vacuum all debris and dust from the recess. Collect all debris resulting from the pavement cutting operation, by vacuuming the pavement cut and adjacent pavement surface.

Disposal of Waste Material:
Remove and collect debris resulting from the grooving/grinding operation prior to opening the roadway to traffic and prior to the application of a surface preparation adhesive. Dispose of collected debris in accordance with §107-10 *Managing Surplus Material and Waste*.

ITEM 685.1X010004 - EPOXY PAINT WITH WET-NIGHT REFLECTIVE ELEMENTS, 20 MILS (GROOVED PAVEMENT METHOD)

Allow the surface to dry before application of any pavement markings when using water or other lubricants for grinding or cleaning the grooves, allow the surface to dry to the satisfaction of the Engineer before application of any pavement markings. If the Engineer determines that the groove surfaces become contaminated during the dry time, it must be cleaned again as per this specification.

Epoxy Paint Application

Pavement markings shall be applied in the general direction of traffic. Applications against the direction of traffic flow shall not be allowed.

Atmospheric Conditions

Epoxy pavement markings shall only be applied during conditions of dry weather and on thoroughly dry pavement surfaces. At the time of installation the pavement surface temperature shall be a minimum of 50°F and the ambient temperature shall be a minimum of 50°F and rising. The Engineer shall be the sole determiner as to when atmospheric conditions and pavement surface conditions are such to produce satisfactory results.

Surface Preparation

The Contractor shall clean all surfaces of the groove by air blasting to remove all loose residues. Include power brooming or manual brooming, if necessary, to remove all loose residue from the groove. Make sure all pavement surfaces are free of oil, dirt, dust, grease, salt, and similar foreign materials at the time of application. The cost of cleaning these contaminants shall be included in the bid price of this item. If water blasting is used, allow the surface to thoroughly dry to the satisfaction of the Engineer, before application of any epoxy paint.

Application of Epoxy Reflectorized Pavement Markings

Epoxy reflectorized pavement markings shall be applied within the grooves as centered as possible, at the width, thickness, and pattern designated in the Contract Documents.

Marking operations shall not begin until applicable surface preparation work is completed and approved by the Engineer, and the atmospheric conditions are acceptable to the Engineer.

Pavement markings shall be applied by the following simultaneous operation:

1. The pavement surface is air-blasted to remove dirt and residues.

2. The epoxy resin, mixed and heated in accordance with the manufacturer's recommendations, is uniformly hot-sprayed onto the pavement surface at the minimum specified thickness. Epoxy paint shall be applied at the wet film thickness specified in the contract documents.

3. Standard Glass Beads for epoxy paint and Wet-Night Reflective Elements are injected into or dropped onto the liquid epoxy marking. The glass beads and wet-night reflective elements shall be applied to the hot epoxy paint using a double drop system, in the amount per unit length of stripe as recommended by the wet-night element manufacturer.

4. The Contractor shall be responsible for removing, to the satisfaction of the Engineer, all tracking marks, spilled epoxy, and epoxy markings applied in unauthorized areas.

Defective Epoxy Pavement Markings

Repair defective markings, as determined by the Engineer and at no additional cost to the State, as follows:

1. *Repair Method for insufficient film thickness, line width, glass bead coverage and/or inadequate glass bead retention:*

   Prepare the surface of the defective epoxy marking by grinding or blast cleaning. No other cleaning methods will be allowed. Surface preparation shall be performed to the extent that a substantial amount of the reflective glass spheres are removed and a roughened epoxy marking surface remains as determined by the Engineer.

   Remove loose particles and foreign debris by brooming or blasting with compressed air just prior to reapplication of markings in accordance with this specification.

2. Repair Method for u*ncured or discolored epoxy and/or insufficient bond to pavement surface or existing durable marking:*

   Uncured epoxy shall be defined as applied material that fails to cure (dry) in accordance with the requirements of §727-03 Epoxy Paint or applied material that fails to cure (dry) within a reasonable time period under actual field conditions, as defined by the Engineer.

   Discoloration shall be defined as localized areas or patches of brown, grayish or black colored epoxy marking material. These areas often occur in a cyclic pattern and often are not visible until several days or weeks after markings are applied.

ITEM 685.1X010004 - EPOXY PAINT WITH WET-NIGHT REFLECTIVE ELEMENTS, 20 MILS (GROOVED PAVEMENT METHOD)

The defective epoxy marking shall be completely removed and cleaned to the underlying pavement surface in accordance with the requirements of Section 635 - Cleaning and Preparation of Pavement Surfaces, at the Contractor's expense.

The extent of removal shall be the defective area plus any adjacent epoxy pavement marking material extending one meter in any direction.

After surface preparation work is complete, repair shall be made by reapplying epoxy over the cleaned pavement surface in accordance with the requirements of this specification.

Other defects not noted above, but determined by the Engineer to need repair, shall be repaired or replaced as directed by and to the satisfaction of the Engineer. All work in conjunction with the repair or replacement of defective epoxy reflectorized pavement markings shall be performed by the Contractor at no additional cost to the State.

METHOD OF MEASUREMENT

The Engineer will measure the length in feet of grooves satisfactorily installed. The Engineer will measure grooves with a plan width greater than the standard 4 in. using the following method:

$$\frac{\text{Plan Width of Striping (inches)} \times \text{Feet}}{4 \text{ inches}}$$

Epoxy paint striping will be measured in feet along the centerline of the pavement stripe and will be based on a 4-in wide stripe. Measurement for striping with a width greater than the basic 4 inches, as shown on the plans or directed by the Engineer will be made by the following method:

$$\frac{\text{Plan Width of Striping (inches)} \times \text{Feet}}{4 \text{ inches}}$$

BASIS OF PAYMENT

The unit bid price, shall include all labor, materials, and equipment to complete the work including the cost of grooving, cleaning and waste disposal associated with the preparation, installation and application of epoxy paint with standard glass beads and wet-night reflective elements.

ITEM 685.1X010004 - EPOXY PAINT WITH WET-NIGHT REFLECTIVE ELEMENTS, 20 MILS (GROOVED PAVEMENT METHOD)

The work will be paid under:

Item No.	Item	Pay Unit
685.16010004	White, Epoxy Paint With White Wet-Night Reflective Elements - 20 mils (Grooved Pavement Method)	Foot
685.17010004	Yellow, Epoxy Paint With Yellow Wet-Night Reflective Elements -20 mils (Grooved Pavement Method)	Foot
685.18010004	White, Epoxy Paint With White Wet-Night Reflective Elements - 20 mils (Hand Work - Grooved Pavement Method)	Foot
685.19010004	Yellow, Epoxy Paint With Yellow Wet-Night Reflective Elements -20 mils (Hand Work - Grooved Pavement Method)	Foot

ITEM 800.01000015 – DESIGN BUILD – DESIGN SERVICES

DESCRIPTION. This work shall consist of providing design services in accordance with the contract documents.

MATERIALS. None Specified.

CONSTRUCTION DETAILS. The Design Builder shall provide Design Services by the appropriately qualified and licensed personnel in accordance with the requirements in the contract documents.

METHOD OF MEASUREMENT. Design Build - Design Services will be measured for payment on a lump sum basis.

BASIS OF PAYMENT. The lump sum price bid for Design Build - Design Services shall include the cost of furnishing all labor, equipment and incidentals to satisfactorily complete the work. Progress payments will be made in accordance with the contract documents.

ITEM 800.02000015 – DESIGN BUILD – CONSTRUCTION INSPECTION SERVICES

DESCRIPTION. This work shall consist of providing Construction Inspection Services in accordance with the contract documents.

MATERIALS. None Specified.

CONSTRUCTION DETAILS. The Design Builder shall provide Construction Inspection Services by the appropriately qualified and licensed personnel in accordance with the requirements in the contract documents.

METHOD OF MEASUREMENT. Design Build - Construction Inspection Services will be measured for payment on a lump sum basis.

BASIS OF PAYMENT. The lump sum price bid for Design Build - Construction Inspection Services shall include the cost of furnishing all labor, equipment and incidentals to satisfactorily complete the work. Progress payments will be made in accordance with the contract documents.

ITEM 800.03000015 – DESIGN BUILD – QUALITY CONTROL SERVICES

DESCRIPTION. This work shall consist of providing Quality Control Services in accordance with the contract documents.

MATERIALS. None Specified.

CONSTRUCTION DETAILS. The Design Builder shall provide Quality Control Services by the appropriately qualified and licensed personnel in accordance with the requirements in the contract documents.

METHOD OF MEASUREMENT. Design Build - Quality Control Services will be measured for payment on a lump sum basis.

BASIS OF PAYMENT. The lump sum price bid for Design Build - Quality Control Services shall include the cost of furnishing all labor, equipment and incidentals to satisfactorily complete the work. Progress payments will be made in accordance with the contract documents.

ITEM 800.0400NN15 – DESIGN BUILD – EXTRA WORK

DESCRIPTION. This work shall consist of performing work in accordance with the contract documents and as directed by the Department's Project Manager. This item provides a contract contingency allowance for the timely payment of authorized extra work.

MATERIALS. None Specified.

CONSTRUCTION DETAILS. The Design Builder shall perform work in accordance with the contract documents and as directed by the Department's Project Manager. The Design Builder shall maintain and submit Agreed Price Work or Force Account Work records in accordance with DB section 109-05 *Extra Work and Time Related Compensation*.

METHOD OF MEASUREMENT. Design Build – Extra Work will be measured for payment on a Dollar Cents basis.

BASIS OF PAYMENT. The price shown for Design Build - Extra Work shall include the cost of furnishing all labor, materials, and equipment necessary to satisfactorily complete the work. The total cost shown in the price proposal will be considered the price bid even though payment will be made only for actual work performed. The unit price amount is not to be altered in any manner by the bidder. Should the bidder alter the amount shown, the altered figure will be disregarded, and the original price will be used to determine the total amount bid for the contract. Progress payments will be made in accordance with the contract documents.

Note: NN in pay item number denotes serialization.

ITEM 800.05000015 – DESIGN BUILD – SITE MOBILIZATION

DESCRIPTION. This work shall consist of providing necessary bonds, insurance, prefinancing and set up of necessary general plant, including shops, storage areas, office and such sanitary and other facilities as are required by local or state law or regulation.

MATERIALS. None Specified.

CONSTRUCTION DETAILS. The Design Builder shall provide the above facilities and service for mobilization in a safe and workmanlike manner in conformance with any pertinent local or State Law, regulation or code to the extent and at the time the Contractor deems them necessary for its operations. Good housekeeping shall be maintained.

METHOD OF MEASUREMENT. Design Build – Site Mobilization will be measured for payment on a lump sum basis.

BASIS OF PAYMENT. The lump sum price bid for Design Build – Site Mobilization shall not exceed four percent (4%) of the total contract bid price for all Construction Work items. Should the bidder exceed the foregoing four percent (4%), the Department will make the necessary adjustment to determine the total amount bid based on the arithmetically correct proposal.

Progress payments in the amount of 4% of the construction work items will be made to the Contractor with the first contract payment made for other contract work at the individual itemized work site.

ITEM 800.0600NN15 – DESIGN BUILD – CONSTRUCTION WORK

DESCRIPTION. This work shall consist of construction work in accordance with the contract documents.

MATERIALS. None Specified.

CONSTRUCTION DETAILS. The Design Builder shall perform all construction work in accordance with the requirements in the contract documents.

METHOD OF MEASUREMENT. Design Build – Construction Work will be measured for payment on a lump sum basis for each location. The individual locations are identified in the contract documents.

BASIS OF PAYMENT. The lump sum price bid for Design Build – Construction Work shall include the cost of furnishing all labor, materials, equipment, management and supervision to satisfactorily complete the work. Progress payments will be made for each construction work location in accordance with the contract documents.

Note: NN in pay item number denotes serialization by location.

ITEM 800.06XXNN15 – DESIGN BUILD – CONSTRUCTION WORK – STRUCTURAL REPAIRS

DESCRIPTION. This work shall consist of structural repair work in accordance with the contract documents and as directed by the Department's Project Manager. For the "unanticipated repairs" items of work, this item provides a contract contingency allowance for the timely payment of authorized extra work that was completed to fulfill the intent of the contract documents.

MATERIALS. None Specified.

CONSTRUCTION DETAILS. The Design Builder shall perform all structural repair work in accordance with the requirements of the contract documents. The Design-Builder shall field verify existing conditions, determine the limits and details of repair, and submit to the Department for acceptance.

For the "unanticipated repairs" items of work, the Design Builder shall maintain and submit Agreed Price Work and Force Account Work records in accordance with DB section 109-05 *Extra Work and Time Related Compensation*.

METHOD OF MEASUREMENT. Design Build – Construction Work – Structural Repairs will be measured for payment on either a lump sum or Dollars-Cents basis.

BASIS OF PAYMENT.

Steel Superstructure Repair Work – Directive Repairs - The lump sum price bid shall include the cost of furnishing all labor, materials, and equipment necessary to satisfactorily complete the work. Progress payments will be made for each construction work location in accordance with the contract documents. No additional payment will be made for field verification of existing conditions, or development of limits and details. Field verification of existing conditions, and development of limits and details, shall be included in the price bid for Design Services.

Steel Superstructure Repair Work – Unanticipated Repairs - The price shown shall include the cost of furnishing all labor, materials, and equipment necessary to satisfactorily complete the work. The total cost shown in the itemized proposal will be considered the price bid even though payment will be made only for actual construction work performed. No additional payment will be made for field verification of existing conditions, or development of limits and details. Field verification of existing conditions, and development of limits and details, shall be included in the price bid for Design Services.

Concrete Substructure Repair Work – Directive Repairs - The lump sum price bid shall include the cost of furnishing all labor, materials, and equipment necessary to satisfactorily complete the work. Progress payments will be made for each construction work location in accordance with the contract documents. No additional payment will be made for field verification of existing conditions, or development of limits and details. Field verification of existing conditions, and development of limits and details, shall be included in the price bid for Design Services.

ITEM 800.06XXNN15 – DESIGN BUILD – CONSTRUCTION WORK – STRUCTURAL REPAIRS

Concrete Substructure Repair Work – Unanticipated Repairs - The price shown shall include the cost of furnishing all labor, materials, equipment necessary to satisfactorily complete the work. The total cost shown in the itemized proposal will be considered the price bid even though payment will be made only for actual construction work performed. No additional payment will be made for field verification of existing conditions, and development of limits and details. Field verification of existing conditions, and development of limits and details shall be included in the price bid for Design Services.

Concrete Retaining Wall Repair Work – Directive Repairs - The lump sum price bid shall include the cost of furnishing all labor, materials, and equipment necessary to satisfactorily complete the work. Progress payments will be made for each construction work location in accordance with the contract documents. Progress payments will be made for each construction work location in accordance with the contract documents. No additional payment will be made for field verification of existing conditions, or development of limits and details. Field verification of existing conditions, and development of limits and details, shall be included in the price bid for Design Services.

Payment will be made under:

Item No.	Item	Pay Unit
800.0601NN15	Steel Superstructure Repair Work – Directive Repairs	Lump Sum
800.0602NN15	Steel Superstructure Repair Work – Unanticipated Repairs	Dollars-Cents
800.0606NN15	Concrete Substructure Repair Work – Directive Repairs	Lump Sum
800.0607NN15	Concrete Substructure Repair Work– Unanticipated Repairs	Dollars-Cents
800.0608NN15	Concrete Retaining Wall Repair Work - Directive Repairs	Lump Sum

Note: NN in pay item number denotes serialization by location.

ITEM 800.14000115 - DESIGN BUILD - LOCAL HIRE INCENTIVE

DESCRIPTION

This work shall consist of the meaningful and effective recruitment and employment of residents from specified areas.

MATERIALS

None specified.

CONSTRUCTION DETAILS

The participation goal, targeted areas, minimum candidate qualifications, tier descriptions, and incentive rates are stated in, and shall be in accordance with, Special Provision titled '*LOCAL HIRE INCENTIVE*' included in the Design-Build contract documents.

A monthly log of all employees and hours for which local hire incentive payments are sought shall be provided. The Department will be the sole judge as to whether the employees and/or hours qualify for the incentive. The certified project payroll records will be used towards verification of the information.

The employees can be direct employees or employees of a subcontractor. Both regular and overtime hours are eligible.

For all employees for whom incentive payments are sought, documentation of their qualifications shall be provided.

Documentation shall be provided of all good faith efforts (GFEs) taken to meet the participation goals. The Department will be the sole judge as to whether reasonable GFEs were made.

GFEs are expected to include (but are not limited to):

- Soliciting candidates through all reasonable and available means (e.g., job search websites, advertisements, distribution of flyers/notices in the targeted areas).
- Providing candidates sufficient time to respond to solicitations.
- Providing interested candidates with adequate information about the project, job, and requirements of the employment opportunity in a timely manner to assist them in responding to a solicitation.
- Conducting a thorough investigation of candidates' qualifications.

METHOD OF MEASUREMENT

Design-Build Local Hire Incentive work will be measured on a Dollar-Cents basis.

BASIS OF PAYMENT

The total cost shown in the price proposal will be considered the price bid even though payment will be made only for actual work performed. The unit price amount is not to be altered in any manner by the bidder. Should the bidder alter the amount shown, the altered figure will be disregarded, and the original price will be used to determine the total amount bid for the contract.

Monthly reimbursement will be made based on the following calculation:

= (Tier 1 Incentive Rate x Hours Worked by Tier 1 employees) + (Tier 2 Incentive Rate x Hours Worked by Tier 2 employees).

During any time period that it is deemed that satisfactory GFEs were not made to meet the requirements of this specification, no reimbursements under this pay item will be made for any hours worked during that time period.

The maximum amount that will be reimbursed is the fixed price shown in the special provisions section of the contract documents.

ITEM 800.15000115 – DESIGN BUILD - TRAINING REQUIREMENTS

DESCRIPTION

This work shall consist of the meaningful and effective training of apprentices/trainees leading to their qualification as an entry level trade worker, professional support worker, or journeyworker in trades for the highway construction industry.

MATERIALS

None Specified.

CONSTRUCTION DETAILS

An Apprentice is defined as an individual who is enrolled in an apprenticeship training program that is registered with the NYS Department of Labor (NYSDOL). A Trainee is defined as an individual who is enrolled in an On-the-Job Training (OJT) program that is sponsored by the NYS Department of Transportation (NYSDOT) and approved by the Federal Highway Administration (FHWA).

At minimum, the number of apprentices/trainees identified in Chart A shall be utilized. If the minimum number is not met, good faith efforts (GFEs), to meet the required number consistently throughout the duration of the contract, must be documented.

Chart A	
Contract Bid Amount	**Minimum # of Apprentices/Trainees**
<$5M	No Requirement unless specified in contract documents
$5M to < $10M	2
$10M < $30M	3
$30M < $100M	4
≥ $100M	1 per $25M of Contract Bid Amount (e.g., 9 for a $240M bid amt)

The required minimum number of apprentice/trainees shall be sustained whenever meaningful training opportunities exist throughout the duration of the contract.

The minimum number of apprentices/trainees may be exceeded if there will be sufficient work to provide meaningful training opportunities.

Selection Criteria

Apprentices/Trainees shall be enrolled in either a NYSDOL registered apprenticeship training program or a NYSDOT OJT program approved by FHWA. The program must be for a trade or profession that is in support of the highway construction industry.

- Good faith efforts shall be made to employ the apprentices/trainees across multiple trades while taking into consideration which trades will have maximum opportunity for work.

- Required journeyworker/apprentice ratios outlined in the prevailing wage rate schedule, the Contractor's workforce needs, and availability of candidates within a reasonable area of recruitment.
- Training in the general laborer/construction worker classification may be permitted when such training is significant and meaningful and documented with an approved training plan.
- Training is permissible for direct support professional positions such as office engineers, estimators, timekeepers, etc., where the training is documented in an approved training plan.

Prior to engaging in the recruitment of new apprentices/trainees, good faith efforts shall be made to employ apprentices/trainees who are at a variety of different stages in their training programs (first year, third year, etc.).

- Persons who have successfully completed an apprentice or trainee program providing journeyworker status in the same trade or work classification as will be used for training under this contract are ineligible candidates. Similarly, persons who have been gainfully employed as a journeyworker in the proposed trade by virtue of informal on-the-job training or otherwise are ineligible candidates.

The apprentices/trainees are not required to be directly employed by a prime contractor. (e.g., they can work for a subcontractor).

Documentation shall be maintained that verifies efforts made to ascertain if candidates met traineeship or apprentice criteria, such as proof of criteria-related questions on employee application forms and proof of past work experience verifications. The Contractor shall maintain records of these findings and provide them upon request.

Affirmative Action Targets

Good faith efforts (GFEs) shall be made to recruit and hire affirmative action (AA) targets, which are defined as women or individuals from minority groups who have experienced long term under-representation in the skilled trades as journeyworkers, or disadvantaged individuals. A disadvantaged individual is defined as a person who is either (a) a member of a family that receives public assistance, or (b) a member of a family whose income during the previous six (6) months, on an annualized basis, was such that the family qualified for public assistance, or whose income was at or below either the poverty level or 70% of the Lower Living Standard Income (LLSI) level for the person's county of residence This includes conducting systematic and direct recruitment through public and private sources likely to yield minority, women or disadvantaged apprentices/trainees.

Training Coordinator

For the duration of the contract, a training coordinator shall be designated by the Contractor and act as the contact person for training related communications. The training coordinator should be someone that has regular dealings and familiarity with the actual training direction and guidance being provided.

Training Programs

Apprentice training programs must be approved by the NYSDOL and Trainee training programs

must be approved by NYSDOT. The approval process for new training programs can take time (30+ days), and approval is not guaranteed. Good faith efforts shall be made to have all training programs approved prior to start of construction.

Apprentices/trainees shall be provided a copy of their training program. Upon completion of a training program, the apprentice/trainee shall be provided a certificate of completion which identifies the training elements completed and the number of hours completed.

Training program information is available from NYSDOL Office of Apprenticeship Training Programs (ATCO@labor.state.ny.gov) and NYSDOT Office of Diversity & Opportunity (civilrights@dot.ny.gov)
.

Training Plans

Prior to the start of construction, a conceptual plan shall be submitted which outlines how the training requirements will be achieved on the contract. The plan shall identify anticipated contract work suitable for apprentices/trainees, any timeline/scheduling issues, anticipated sources for apprentices/trainees, steps taken to date to comply with the training requirements, and procedures for development of individual training plans for each apprentice/trainee.

Formalized training plans for each apprentice/trainee shall be submitted within fourteen (14) calendar days of the start of construction. All coordination with the Department/Project Sponsor regarding the training plan should be completed at this time. Written requests for submission at a later date will be considered based on provided justifications. The training plans may be adjusted throughout the duration of the contract as necessary.

The approved number of hours of anticipated qualifying training in each training plan is expected to be achieved by contract completion. Adjustments throughout the duration of the contract shall be made as necessary to best achieve the number of planned training hours stated in the training plans.

Individual training plans shall include:

- Name of the apprentice/trainee, trade, starting level (i.e., year of apprenticeship or training program).
- Apprentice/trainee projected start date, projected end date, and the reason for ending the training (e.g., training program completed, no remaining training opportunities, contract completion, etc.).
- An outline of the training program requirements the candidate has already completed and the requirements which the candidate still has left to complete. Provide the associated number of hours for each requirement. List classroom and on-site training requirements separately.
- Total number of on-site (non-classroom) hours left to complete the training program.
- Projection of the hours and elements of the remaining training program requirements which the candidate will be able to accomplish on the contract.
- A cost estimate for compensation which shows how the amount was calculated.
- Any known outside factors that might affect the training plan, such as if the apprentice/trainee will be working on other contracts or there may be time constraints of

the apprentice (ex., planned future reassignment, leaving to attend school, moving/relocating, etc.).

- For each apprentice:
  - NYSDOL Form AT 14 (blue book) or acceptable equivalent.
  - NYSDOL Form AT 401 – *Apprenticeship Agreement/Documentation Form*.

Monthly Training Progress Report
For each apprentice/trainee, Form AAP 26 - *Monthly Training Progress Report* shall be submitted monthly whenever there are apprentices/trainees employed. In addition, for each apprentice/trainee, a summary of hours required to complete the various work elements of the training program, hours completed this period, and hours completed to date shall be submitted monthly. This summary shall be provided in sufficient detail to allow for assessment of whether the reported hours qualify for reimbursement.

Apprentices/trainees shall be reported on Form AAP 35 *Workforce and Training Utilization Schedule.*

Qualifying Training
Only training hours verified and approved of by the NYSDOT and NYSDOL will be considered as qualifying training. Off-site training or training performed at other work sites does not qualify for compensation. Classroom training hours do not qualify for compensation.

Periodic Reporting / End of Service
Periodically copies of the training program and NYSDOL Form AT 14(blue book) for apprentices/trainees may be required to be provided for auditing purposes and verification of training. It shall be reported whenever an apprentice or trainee ceases to be employed on a contract, and if an apprentice completes a trainee program a copy of their NYSDOL Form AT 14 (blue book) shall be provided.

Training Duration
An apprentice/trainee shall begin training as soon as feasible in trade related work and remain on the contract for at least as long as training opportunities exist in the trade, until completion of the training program, or until completion of the contract.

Maximum opportunity shall be provided to the apprentices/trainees for completion of their training program. Progress towards completion of work elements shall be monitored. When a work element of the training program is completed, apprentices/trainees shall be moved to other work processes or another training element to the extent that training opportunities exist. Should no such training opportunities exist, the apprentices/trainees may continue to be assigned to work related to the completed work element.

Apprentices/trainees who complete their training programs are expected to be retain as a journeyworker provided there is relevant contract work remaining. Continued work as a journeyworker does not qualify for reimbursement under this pay item.

Termination
An apprentice/trainee may be terminated at any time during training for: excessive absenteeism; lack of punctuality; breach of a "zero tolerance" policy for drug and substance use; and continued failure to perform work safely. However, termination shall not occur without:

- Documented counseling by the Training Coordinator about the reason(s) for termination
- Documented efforts by the Training Coordinator to resolve the problem
- Documented notification to the Engineer and Regional Compliance Specialist about the problem
- Written notification of intent to terminate to the Engineer and the Regional Compliance Specialist stating the reason(s) therefore
- An opportunity for confirmation of compliance with these pre-requisites.

METHOD OF MEASUREMENT

This work will be measured on a Dollars-Cents basis. The fixed amount shown in the proposal is not to be altered in any manner by the bidder. Should the bidder alter the amount shown, the altered figure will be disregarded, and the original price will be used to determine the total amount bid.

BASIS OF PAYMENT

Monthly reimbursement will be made based on the following calculation:

= (0.35) x (Base Journeyworker Prevailing Wage Rate) x (Hours of Qualifying Training Accomplished)

No adjustments to the base rate shall be allowed, such as for: fringes/supplemental benefits, premium rates (overtime, holiday, etc.), worker's compensation insurance, FICA, state or federal

unemployment insurance, commercial general liability (CGL) insurance, etc. When determining compensation, use the prevailing wage rate that was current at the time the training was provided.

Qualified training time will include only verified training properly completed and accounted for, including only those hours the apprentices/trainees received on-site training in the work elements included in their approved apprenticeship/OJT programs.

During any time period that it is deemed that satisfactory good faith efforts were not made to fulfill the training requirements and corresponding equal employment opportunity (EEO) goals in accordance with 102-11 *Equal Employment Opportunity Requirements* no reimbursements under this pay item will be made for any training provided during that time period

Regardless of the amount approved for the pay item, reimbursement will be made only for the number qualifying hours of training accomplished.

ITEM 800.16000120 – DESIGN-BUILD – STEEL/IRON PRICE ADJUSTMENT

DESCRIPTION. This item will provide for price adjustment in the form of additional compensation to the Design-Builder for increases, or repayment by the Design-Builder for decreases, in the price of steel/iron products. The Department will make price adjustments to account for changes in steel/iron product prices for materials eligible and identified by the Design-Builder which will be permanently incorporated into the work.

MATERIALS. None specified.

CONSTRUCTION DETAILS. The materials to which the Design-Builder (DB) opts to apply the steel/iron price adjustment, shall be as identified by Form PA, *Steel/Iron Price Adjustment Declaration Form*, at the proposal due date. All materials indicated by the DB as opt-in for adjustment shall become part of the contract upon award. The price adjustments shall permanently apply to these materials identified for the duration of the contract, regardless of whether the price index increases or decreases. The Design-Builder is not permitted to opt-in or opt-out of the price adjustments post proposal submission.

For each material that the DB elects to opt-in, they shall submit to the Department, within 30 days of NTP, a List of Steel/Iron Price Adjustment Invoice Relationships, which identifies the parties (invoice From/To) whose relationships establish the invoice date. The established relationships and invoice dates shall be used in the calculations described herein. If the two parties are not known, they shall be identified by role (DB, Subcontractor, Material Supplier, Fabricator, Manufacturer, Mill, etc.). Different parties may be identified for individual or groups of specification materials for the purposes of establishing the invoice date. The invoice relationship date shall remain the same for the duration of the contract and may not be altered.

On a monthly basis, the Design-Builder shall submit invoices for the materials for which they have opted-in to the price adjustment, identify where the steel/iron will be installed and track the quantities so that steel/iron quantities identified on the RFC plans are fully accounted for at Project Completion. The steel/iron price adjustment will be based on the monthly steel index in effect on the date of invoice between the two parties previously identified by the Design-Builder, calculated using the price adjustment formula described herein.

The monthly steel cost basis and steel index values will be posted in the Engineering Bulletin entitled *Fuel, Asphalt and Steel Price Adjustments.* If the percentage change for a given month does not exceed 5% plus or minus, from the benchmark steel index, no adjustments will be made for materials invoiced that month. For items that are assembled from numerous components, the percentage change will be determined for the assembled item using the month that the largest value of materials was invoiced.

The weight of steel and/or iron eligible for price adjustment shall be as identified on the RFC drawings. The weight of the steel and/or iron shall exclude minor appurtenances individually weighing less than 5 lbs (i.e., nuts, bolts, washers, etc.). Precast or prestressed concrete items, if eligible, shall have total reinforcing steel weight listed on the approved shop drawings.

No adjustment will be provided for materials invoiced prior to award, or after the original contract completion date.

No adjustment will be provided for any new or additional work added to the contract. No temporary work shall be considered eligible for the steel/iron price adjustment.

The Design-Builder's RFC plans and shop drawings shall clearly indicate the quantities for the materials subject to price adjustment.

A. ***Indexes and Prices.*** Adjustments are based on the Producer Price Index (PPI) for *Semifinished Steel Mill Products* (WPU 101702). PPI values are published by the US Department of Labor, Bureau of Labor Statistics (BLS). Recent PPI values are posted on the Office of Construction website at *www.dot.ny.gov.* A complete listing of PPI values can be found on the BLS website at *http://data.bls.gov/PDQ/outside.jsp?survey=wp.* The Cost Basis, Benchmark Steel Index, Monthly Steel Index, and the Percentage Change are defined as follows:

1. ***Cost Basis (CB).*** An average price of steel products in dollars per ton used solely as a cost basis from which to compute steel/iron price adjustments. The Cost Basis for the eligible Contract Features listed on Form PA will be the cost basis listed for the month that the Proposals are submitted.

2. ***Benchmark Steel Index (BI).*** The benchmark steel index for the eligible Contract Features listed on Form PA will be the value of the preliminary PPI for the month that the Proposals are submitted.

3. ***Monthly Steel Index (MI).*** Value of the final PPI for the month the material is invoiced. If the final PPI is not posted for a given month, the value will be the preliminary PPI for the month the material is invoiced. If a preliminary PPI is not posted for a given month, the value will be the average of the two preceding months that are posted.

4. ***Percent Change.*** The percent change in any given month will be determined as follows:

$$Percentage\ Change = \left(\frac{MI - BI}{BI} \right) x\ 100$$

B. ***Quantity.*** The quantity of steel and/or iron for adjustment for each core structural steel component will be measured to the nearest 0.1 Tons.

1. ***Percent Change Greater Than +5%.*** If the Percentage Change is greater than +5% from the benchmark steel index, Price Adjustments will be made for materials invoiced that month. The Design-Builder shall provide the Engineer a detailed list of the weight of eligible materials within 60 calendar days after installation, including: the base material specification (i.e. 715-01 – *Structural Steel*), the weight of steel/iron, the

month(s) of invoice, the source used to determine the weight, and copies of invoices to verify the month of invoice.

2. ***Percent Change -5% to +5%.*** If the Percentage Change is between -5% and +5%, inclusive, from the benchmark steel index, no adjustments will be made for materials invoiced that month.

3. ***Percent Change Lower Than -5%.*** If the Percentage Change is lower than -5% from the benchmark steel index, a Price Adjustment will be charged to the Design-Builder for materials invoiced that month. The Design-Builder shall provide the Engineer a detailed list of the weight of eligible materials within 60 calendar days after installation, including: the base material specification (i.e. 715-01 – *Structural Steel*), the weight of steel/iron, the month(s) of invoice, the source used to determine the weight, and copies of invoices to verify the month of invoice.

C. ***Adjustment.*** Steel/Iron price adjustment will be made for the materials which the Design-Builder opted to apply the steel price adjustment, based on the following formulas:

- When price increases:

$$Price\ Adjustment = \left[\left(\frac{MI - BI}{BI}\right) - 0.05\right](CB)\,Qty$$

- When price decreases:

$$Price\ Adjustment = -\left[\left(\frac{MI - BI}{BI}\right) + 0.05\right](CB)\,Qty$$

METHOD OF MEASUREMENT. Steel/Iron price adjustments will be measured on a Dollar Cents basis.

BASIS OF PAYMENT. The total price shown for this item in the itemized proposal on Form SP shall be considered the price bid, even though actual payment (or credit) will be made (or credited) based on actual price adjustments to eligible steel/iron material quantities. Should the amount shown be altered, the altered figures will be disregarded, and the original price will be used to determine the total contract bid amount.

Payments for Steel/Iron Price Adjustments will be paid for under Item 800.16000120. The monetary figure listed on Form SP for Item 800.16000120 will be the maximum Steel/Iron price adjustment for this contract for all materials for which the Design-Builders elects to opt-in on Form PA. The net sum of payments to the Design-Builder and credits to the Department will not exceed the amount identified for this item.

Failure by the Design-Builder to submit monthly invoices and to track quantities to account for all eligible materials may result in non-payment to the Design-Builder for failure to comply with the contract requirements.