I-81 VIADUCT PROJECT - PHASE 1, CONTRACT 2

PIN 3501.91, Contract D900056

CONTRACT DOCUMENTS
REQUEST FOR PROPOSALS

PART 5

SPECIAL PROVISIONS

Final November 4, 2022

TABLE OF CONTENTS

SP-1. SPECIAL PROVISION TO SECTION 100 OF NYSDOT STANDARD SPECIFICATIONS CONSTRUCTION AND MATERIAL 1

SP-2. SPECIAL PROVISION TO SECTIONS 200 THROUGH 699 OF THE NYSDOT STANDARD SPECIFICATIONS CONSTRUCTION AND MATERIAL AND APPLICABLE NYSDOT SPECIAL SPECIFICATIONS 1

SP-3. CRITICAL PATH METHOD SCHEDULE 3

3.1 DESCRIPTION 3

3.2 DEFINITIONS 4

3.3 CONSTRUCTION DETAILS 7
3.3.1 Project Scheduler 8
3.3.2 Scheduling Software 8
3.3.3 Prestart Schedule Meeting 9
3.3.4 Progress Schedule 11
3.3.5 Progress Schedule Review and Analysis 30
3.3.6 Changes to Progress Schedule due to Added/Deleted/Changed Work: 33
3.3.7 Failure to Submit Progress Schedules and/or Recovery Schedules 35
3.3.8 Recovery Schedule 35
3.3.9 Float 35

3.4 PAYMENT 35

SP-4. MATERIALS APPROVAL PROCEDURES FOR DESIGN-BUILD PROJECTS 35

SP-5. SPECIAL PROVISIONS FOR TESTING BRIDGE BEARINGS 37

5.1 Disc-Design Structural Bridge Bearings 38
5.1.1 Polyether Urethane Structural Element 38
5.1.2 Steel Plates 38
5.1.3 Stainless Steel 38
5.1.4 Polytetrafluoroethylene (PTFE) Sheet and Strip 38
5.1.5 Welding Procedure 38
5.1.6 Compression Strain 38
5.1.7 Sliding Coefficient of Friction 38
5.1.8 Rotation Test 38

5.2 Pot-Design Structural Bridge Bearings 39
5.2.1 Elastomeric Rotational Element 39
5.2.2 Steel 39
5.2.3 Stainless Steel 39
5.2.4 Polytetrafluoroethylene (PTFE) Sheet and Strip 39
5.2.5 Welding Procedure 39

5.2.6 Sliding Coefficient of Friction....39
5.2.7 Rotation Test....39

5.3 Steel Laminated Elastomeric Bridge Bearings and Elastomeric Bridge Bearings with External Load Plates....39
5.3.1 Elastomeric Material....40
5.3.2 Internal Steel Plates (shims)....40
5.3.3 External Load Bearing Plates and Steel Backing Plates....40
5.3.4 Welding Procedure....40
5.3.5 Bearing Tolerances....40
5.3.6 Compression / Deflection....40
5.3.7 Adhesion....40

SP-6. PAYMENT REDUCTIONS, LIQUIDATED DAMAGES AND EARLY COMPLETION BONUS....40

6.1 Payment Reductions and Liquidated Damages....41
6.1.1 Project Completion....41
6.1.2 Interim Completion....41
6.1.3 Impacts to Traffic....41

6.2 Early Completion Bonus....41

SP-7. CONSTRUCTION INSPECTION REQUIREMENTS....42

SP-8. COST LOADED SCHEDULE....51

SP-9. DB PERFORMANCE ENGINEERED CONCRETE MIXTURES....52

SP-10. INSURANCE REQUIREMENTS....53

SP-11. REQUIREMENTS FOR BRIDGES WITH LINK SLABS....57

11.1 GENERAL....57
11.1.1 BEARING ANALYSIS ASSUMPTIONS....58

11.2 NEW AND REPLACEMENT BRIDGES....58

11.3 EXISTING BRIDGES....59
11.3.1 SIMPLIFIED ANALYSIS OF CONTIGUOUS SEGMENTS....60
11.3.2 REFINED ANALYSIS OF CONTIGUOUS SEGMENTS....62

SP-12. NATIONAL HISTORIC PRESERVATION ACT OF 1966 SECTION 106 PROGRAMMATIC AGREEMENT....64

SP-13. LOCAL HIRING INITIATIVE....65

SP-14. TRAINING REQUIREMENTS....66

SP-15. STEEL/IRON PRICE ADJUSTMENT....67

SP-16. DOCUMENT CONTROL MANAGEMENT AND REPORTING....68

SP-17. RISK REGISTER.....70

SP-18. CITY OF SYRACUSE LOCAL SPECIFICATIONS AND REQUIREMENTS.....71

SP-19. CSX RAILROAD REQUIREMENTS.....72

SP-20. DRAFT PROJECT LABOR AGREEMENT (PLA).....73

SP-1. SPECIAL PROVISION TO SECTION 100 OF NYSDOT STANDARD SPECIFICATIONS CONSTRUCTION AND MATERIAL

Amend Section 100 of the New York State Department of Transportation Standard Specifications Construction and Materials, in effect as of the Proposal Due Date, as described in Part 2, § DB 100 and as follows:

The following amendments apply to Section 100 of the New York State Department of Transportation Standard Specifications Construction and Materials in effect as of the Proposal Due Date:

A. All references to “Contractor” shall mean “Design-Builder”;

B. All references to “Bid(s)”, “Bidder(s)” and “Bidding”, shall mean “Proposal(s)”, “Proposer(s)” and “Proposing” respectively;

C. All references to “Contract Plans” shall mean “Contract Documents”;

D. All references to “the Engineer” or “the Engineer-in-Charge” shall mean the Department’s Project Manager or designated representative;

E. All references to a section, denoted by “§”, that is covered in Part 2, § DB 100, shall mean “§ DB”.

Replace Section 100 of the NYSDOT Standard Specifications Construction and Materials by Part 2, DB § 100, except as noted in Part 2, § DB 100.

SP-2. SPECIAL PROVISION TO SECTIONS 200 THROUGH 699 OF THE NYSDOT STANDARD SPECIFICATIONS CONSTRUCTION AND MATERIAL AND APPLICABLE NYSDOT SPECIAL SPECIFICATIONS

The following amendments apply to Sections 200 through 699 inclusive of the New York State Department of Transportation Standard Specifications Construction and Materials in effect as of the Proposal Due Date, and any NYSDOT Special Specifications referenced in Part 3, Project Requirements or which otherwise might be required during the design and construction of the Project, with the exception of Section 800 Specifications contained in Part 8 – Special Specifications:

A. All contact with Department staff or offices except for personnel assigned to the Project shall be through the Department’s Project Manager.

B. References to “plans” or “contract plans” shall mean “Design Plans” prepared by the Design-Builder.

C. There will be no measurement for payment except for Unit Priced items specifically shown in the Price Proposal. All Work will be paid on the basis specified in Part 2 – DB § 109.

D. All references to “Section 100” Specifications shall mean equivalent references to Part 2 - DB § 100 Specifications.

E. Delete the following phrases:

   1) “deemed necessary by the Engineer”;

2) “to the satisfaction of the Engineer”;
3) “as determined by the Engineer”;
4) “subject to the approval of the Engineer”;
5) “as specified by the Engineer”;
6) “approved by the Engineer”;
7) “ordered by the Engineer”;
8) “established by the Engineer”;
9) “acceptable to the Engineer”;

Or similar phrases denoting instruction by or consent from the Engineer.

If the relevant information is not shown on the Design Plans or covered in the Project Specifications, the Design-Builder shall have the Designer change the Design Plans and/or Project Specifications to incorporate the missing information.

F. Delete references to “payment lines” and replace with “lines shown on the Design Plans.”

G. References to “Proposal” or “proposal” shall be interpreted to mean the “Contract Documents”;

H. Unless specifically stated otherwise in the Contract Documents, sampling and testing specified to be done by the Engineer or other Department staff, shall be performed by the Design-Builder’s Construction Quality Control (QC) staff;

I. “Submission” or “submittal” used in the design shall be subject to review and Department acceptance per Part 3, Section 5.8;

J. All references to “the Engineer” or “the Engineer-in-Charge” shall mean the Department’s Project Manager or designated representative;

K. All references to “Contractor” shall mean “Design-Builder”;

L. References to: “Deputy Chief Engineer Design, Construction, Technical Services”; any Division in Main Office NYSDOT; “Regional Director”; “Regional Design Engineer”; “Materials Engineer”; “Construction Engineer”; or any other similar title and role shall mean the Department’s Project Manager or a designated representative;

M. References to “Contract Award” shall mean Notice to Proceed;

N. References to “preconstruction meeting” shall mean “pre-work conference”;

O. There shall be no quality payment adjustments under this Contract;

P. In each Specification delete the sections titled “Method of Measurement” and “Basis of Payment”;

Q. Delete Table 619-7 – Basic Work Zone Traffic Control Non-Payment, in Section 619-5 – Basis of Payment and replace with the following Table

BASIC WORK ZONE TRAFFIC CONTROL NON-PAYMENT	
Original Contract Amount	Non-Payment Amount

From More Than	To and Including	
$ 0	$ 500,000	$ 200
$ 500,000	$ 2,000,000	$ 400
$ 2,000,000	$ 5,000,000	$ 500
$ 5,000,000	$ 10,000,000	$ 750
$ 10,000,000	$ 20,000,000	$ 1,000
$ 20,000,000	$ 50,000,000	$ 3,000
$ 50,000,000	$250,000,000	$ 5,000
$250,000,000	$500,000,000	$10,000
$500,000,000	-	$20,000

R. Add the following to Section 648 – Subsurface Explorations:

"The Design-Builder shall be responsible to determine the nature, extent, and locations of subsurface explorations needed to obtain data and support subsequent analysis, design, and construction. The Design-Builder shall also be responsible for determining the adequacy of any subsurface exploration data provided by the Department to support its analyses, design, and construction and to supplement such data provided by the Department as the Design-Builder deems necessary.

"In planning and conducting its subsurface explorations, the Design-Builder shall comply with the technical requirements of Section 648, unless the Department agrees otherwise. The Design-Builder is not required to comply with the administrative requirements specified in Section 648".

S. Delete Section 697 – Field Change Payment;

T. Delete Section 698 – Price Adjustments; and

U. Delete Section 699 – Mobilization.

SP-3. CRITICAL PATH METHOD SCHEDULE

3.1 DESCRIPTION

The schedule submitted in accordance with DB Section 108-01 shall consist of preparing, maintaining and submitting a Progress Schedule using the Critical Path Method on Primavera P6 software, or newer release, which demonstrates complete fulfillment of all work including engineering, construction and administration of the Contract. All work to prepare and maintain the Progress Schedule shall be performed using the scheduling software application provided by the Department on network servers and accessed through the Internet with Department provided user accounts. The Design-Builder shall regularly revise and update the Progress Schedule, and use it in planning, coordinating, and performing all work. Schedule activities shall accurately depict the entire scope of work to be performed to complete the project including, but not limited to, all work to be performed by the Design-Builder, consultants, subcontractors, fabricators, suppliers, the Department, and others, contributing to the project. The Design-Builder shall submit Monthly Progress Schedule Updates and Weekly Progress Schedule Status Reports.

3.2 DEFINITIONS

Activity - A discrete, identifiable task or event that usually has an expected duration, has a definable Start Date and/or Finish Date, and can be used to plan, schedule, and monitor a project.

Activity, Controlling - The first incomplete activity on the critical path.

Activity, Critical - An activity on the critical path.

Actual Start date - At the activity level, the Actual Start date represents the point in time that meaningful work actually started on an activity.

Actual Finish date - At the activity level, the Actual Finish date represents the point in time that work actually ended on an activity (Note: in some applications areas, the activity is considered "finished" when work is "substantially complete."); at the project level, the Actual Finish date represents the point in time that the Design-Builder completes all work on the Project and it is accepted by the Project Manager.

Baseline Progress Schedule - The Progress Schedule submitted by the Design-Builder that shows the plan to complete the Contract Work. The Baseline Progress Schedule represents the Design-Builder's plan at the time of Notice to Proceed for completing the Project.

Completion Date, Contract - The date specified in the Contract for completion of the Project or a revised date resulting from properly executed time extensions.

Completion Date Scheduled - The date forecasted by the Progress Schedule for the completion of the Project.

Constraint - A schedule restriction imposed on the Start or Finish date(s) of an activity that modifies or overrides an activity's relationships.

Contemporaneous Period Analysis Method – A technique for evaluating schedule delays or time savings. The analysis period for the purpose of these provisions shall be monthly in each regular progress update to the schedule.

Critical Path – The activities being on the longest path. In a project network diagram, the series of activities which determine the earliest completion of the Project.

Critical Path Method (CPM) – A network analysis technique used to predict project duration by analyzing which sequence of activities (which path) has the least amount of scheduling flexibility (the least amount of float). A scheduling technique utilizing activities, durations, and interrelationships/dependencies (logic), such that all activities are interrelated with logic ties from the beginning of the Project to the completion of the Project.

Data Date – The date entered in the Project Details, in the Dates tab, which is used as the starting point to calculate the schedule. For the Baseline Progress Schedule submission the Data Date shall be the Notice to Proceed Date; for Monthly Progress Schedule submissions, the Data Date shall be the date up to which the Design-Builder is reporting progress and is as directed by the Department's Project Manager. Everything occurring earlier than the Data Date is "as-built" and everything on or after the Data Date is "planned."

Deliverable – Any measurable, tangible, verifiable outcome, result, or item that must be produced to complete a project or part of a project. Often used more narrowly in reference to an external deliverable, this is a deliverable that is subject to approval by the Department.

Design-Builder's First Day of Construction Work – The day the Design-Builder starts field

work within the highway Right-of-Way, which is entered as a Start milestone activity in the schedule.

Design-Builder's Last Day of Work – The last day of physical work in the field, and the Design-Builder has demobilized (no longer has any presence within the highway right-of-way).

Design-Builder Work Day - A calendar day scheduled for active prosecution of Contract work by the Design-Builder or the Design-Builder's representative.

Draft Baseline Progress Schedule – An optional schedule submission that reflects an outline of the schedule format and content proposed by the Design-Builder's Project Scheduler to comply with the schedule provisions in the contract to solicit early comments by the Project Manager, prior to the submittal of complete Baseline Progress Schedule.

Duration, Original - The original estimated number of work days (not including holidays or other non-working periods) in which the work task associated with the activity is expected to be performed. (The number of calendar days may be different based on the calendar assigned to the activity.) For certain activities such as concrete curing, or others approved by the Project Manager, the calendar shall not reflect non-work days.

Duration, Remaining - The estimated time, expressed in work days (not including holidays or other non-working periods), needed to complete an activity that has started but has not finished.

Early Completion Schedule - A progress schedule will be considered an early completion schedule when the schedule submitted by the Design-Builder indicates a completion date that is earlier than the specified Project Completion Date, or when the Finish date of any Interim Milestone work activity is earlier than the date specified in the Contract. This includes, but is not limited to, activities subject to Incentive/Disincentive provisions and/or specific Liquidated Damages provisions, and Lane Rental activities.

Early Dates – The earliest date an activity can start or finish based upon logic and durations. Calculated by the software application when scheduling the Project.

Enterprise Project Management Database (EPMD) – The Department's database of construction project Progress Schedules.

Final Baseline Progress Schedule - The plan, accepted by the Department, against which the Design-Builder's progress is measured. The Final Baseline Progress Schedule represents the plan, after Notice to Proceed is issued to the Design-Builder, of how procurement, design and construction is expected to proceed. Once the Final Baseline Progress Schedule is accepted by the Department's Project Manager it is saved and used as a basis to compare against Progress Schedules Updates.

Float Suppression - Utilization of zero free float constraints which allows an activity to start as late as possible by using all its' available free float. This technique allows activities to appear more critical than if the activity's total float was based on early dates. Assigning zero free float prevents true sharing of total float between Department and the Design-Builder. Utilization of overly generous activity durations and overly restrictive calendar non-working periods are also considered to cause float suppression.

Float, Free - The amount an activity can slip without delaying the immediate successor activities. Free Float is the property of an activity and not the network path.

Float, Total - The amount of time an activity (or chain of activities) can be delayed from its early start without delaying the Project Completion Date. Total Float is calculated and reported for each activity in a network, however, Total Float is an attribute of a network path and not

associated with any one specific activity along that path.

Fragnet – A subdivision of a project network diagram usually representing some portion of the Project.

Global data – Data classified by Oracle Primavera software as Global, including Project Codes, Global Activity Codes, Global Calendars, Resource Calendars, Global Filters, Resources, Global Reports, User Defined Fields and Unit of Measure.

Initial Baseline Progress Schedule - The Progress Schedule submitted by the Proposer that shows the plan to complete the Contract Work. The Initial Baseline Progress Schedule represents the Design-Builder's plan at the time of Proposal Due Date for completing the Project.

Key Plans - Key Plans are graphic representations made by the Design-Builder's Project Scheduler on paper copies of the appropriate Contract plan sheets that reflect the Design-Builder's planned breakdown of the Project for scheduling purposes to efficiently communicate the Design-Builder's activity coding scheme to State scheduling staff. The key plans prepared by the Design-Builder shall clearly define the boundaries of the work for each designated Area, the operations contained in various Stages of work, and work in the Work Zone Traffic Control (WZTC) Phases. The alphanumeric codes on the key plans shall match the code values for the activity code "Area", "Stage", and "WZTC Phase" in the Progress Schedule.

Late Dates –The latest an activity can start or finish without delaying the day of completion.

Longest Path - The sequence of activities through the Progress Schedule network that establishes the Scheduled Completion Date

Look-Ahead Schedule – A three week time segment generated from the accepted Progress Schedule that shows the actual work progressed during the previous one week and forecasts the work planned for next two week period following the Data Date.

Milestone – An activity with zero duration that typically represents a significant event, usually the beginning and end of the Project, milestones set forth in the Contract, construction stages, a major work package, or the Contract interim time-related clauses.

Narrative Report - A descriptive report submitted with each Progress Schedule.

Open End - The condition that exists when an activity has either no predecessor or no successor, or when an activity's only predecessor relationship is a finish-to-finish relationship or only successor relationship is a start-to-start relationship.

Predecessor - An activity that is defined by Schedule logic to precede another activity. A predecessor may control the Start Date or Finish Date of its successor.

Progress Schedule – A general Primavera P6 Schedule as defined by this Special Provision.

Progress Schedule Delay - An event, action, or other factor that delays the critical path of the Progress Schedule and extends the time needed for completion of the construction project.

Progress Schedule Revision – Revisions to the Progress Schedule ensure it accurately reflects the current means and methods of how the Project is anticipated to progress, including modifications made to any of the following items: (a) changes in logic connections between activities; (b) changes in constraints; (c) changes to activity descriptions; (d) activity additions or deletions; (e) changes in activity code assignments; (f) changes in activity production rates; and (g) changes in calendar assignments.

Progress Schedule Update – Changes to the Progress Schedule that reflect the status of activities that have commenced or have been completed, including the following items: (a) Actual Start date and or Actual Finish date as appropriate; (b) Remaining Duration for activities commenced and not complete; and (c) Suspend or Resume dates for activities commenced and not complete.

Project Scheduler – The person with the skills and expertise that is responsible for developing and maintaining the Progress Schedule.

Projects Planned Start Date – The date entered in the Project Details, in the Dates tab, that reflects the Design-Builder's planned start of work (based on Contract requirements, and reasonable expectation for a Notice to Proceed) at the Proposal Due Date.

Recovery Schedule – A schedule depicting the plan for recovery of significant time lost on the Project. This separate CPM schedule submission shall provide the resolution and include appropriate changes in network logic, calendar adjustments, or resource assignments.

Relationships - The interdependence among activities. Relationships link an activity to its predecessors and successors. Relationships are defined as:

Finish to Start - The successor activity can start only when the current activity finishes.

Finish to Finish – The finish of the successor activity depends on the finish of the current activity.

Start to Start – The start of the successor activity depends on the start of the current activity.

Start to Finish – The successor activity cannot finish until the current activity starts.

Scheduling/Leveling Report – The report generated by the software application when a user "Schedules" the project. It documents the settings used when scheduling the project, along with project statistics, errors/warnings, scheduling/leveling results, exceptions, etc.

Successor - An activity that is defined by Schedule logic to succeed another activity. The Start Date or Finish Date of a successor may be controlled by its predecessor.

Time Impact Analysis (TIA) – A technique to demonstrate the comparison of a time impact of a Progress Schedule revision prior to a change in the Contract work, against the current accepted Progress Schedule. Also known as a "What-If" analysis. A Time Impact Analysis is used to evaluate proposed changes to future work activities in the schedule.

Weekly Progress Schedule Status Report – Package of activity layouts generated weekly from the latest updated Progress Schedule in an electronic Adobe Acrobat PDF format that reflects an updated Data Date for that weekly period, and updated progress for that weekly period. The reports include multiple and various activity layouts as specified. The report shall be formatted to fit ANSI Size D or B paper. The reports shall be submitted to the Department's Project Manager in advance of, and used in, the weekly progress meetings.

Work Breakdown Structure (WBS) - A deliverable-oriented grouping of project elements, which organizes and defines the total scope of the Project. Each descending level represents an increasingly detailed definition of project components or work packages.

Work Package - A deliverable at the lowest level of the work breakdown structure. A work package contains activities.

3.3 CONSTRUCTION DETAILS

3.3.1 Project Scheduler

The Design-Builder shall designate an individual, entitled the Project Scheduler, who will develop and maintain the Progress Schedule. The Project Scheduler shall be present at the Prestart Schedule Meeting, prepared to discuss, in detail, the proposed sequence of work and methods of operation, and how that information will be communicated through the Progress Schedule. The Project Scheduler shall attend all meetings, or receive meeting minutes that outline schedule related issues of those meetings, which may affect the CPM schedule, including but not limited to those between the Design-Builder and their consultants, subcontractors and between the Design-Builder and the Department. The Project Scheduler shall be knowledgeable of the status of all aspects of the work throughout the length of the Contract, including but not limited to: original Contract work, additional work, new work, and changed conditions of work.

3.3.2 Scheduling Software

The State will provide Primavera P6 software, or newer release, and computer system for use by the Project Manager to review the schedules submitted by the Design-Builder. The Department has installed Primavera P6 software, or newer release, on internet accessible servers for use by the Department's design and construction inspection staff. Appropriate Department personnel, Consultants, and Design-Builders will also have access to these schedules on the Department's Enterprise Project Management Database (EPMD). The Department will determine the location to store the Project Schedule files on the EPMD, and will provide the Design-Builder the naming convention for all Progress Schedule submissions. The Design-Builder shall develop, update, and revise the Progress Schedules using the Department provided Oracle-Primavera P6 software application and the Design-Builder shall store all Progress Schedule files on the Department's EPMD.

The Design-Builder shall submit *NYSDOT Primavera Access and NYSDOT AD Account Request Form* to the Department's Project Manager for each proposed Primavera user to obtain the User ID's and Passwords for access to software and data on the Department's network servers. The form can be downloaded from the following web page:

https://www.dot.ny.gov/divisions/engineering/design-buildprojectmanagement,

or can be provided by the Project Manager. These forms may be submitted any time following the Contract Designation. The Department will process these requests and should generally provide the User ID's and Passwords within two weeks of receipt by the Project Manager. Upon approval and authorization by the Project Manager and the Project Management Office, required User ID's and passwords will be provided to the Design-Builder (for the Project Scheduler plus other persons approved by the project Manager) to obtain secure Internet access to the Primavera software and project schedule data. If the Contract is not awarded to this firm, the firm's access to this Project will be removed. Department provided User Id's and Passwords are assigned to specific individuals and shall not be shared with any other users.

The Department will provide the Design-Builder with a schedule template for the Design-Builder's use in developing their Progress Schedule. The Design-Builder shall further develop, update, and revise the Baseline Progress Schedule using Primavera P6 software that has been loaded on the Department's network servers and the Design-Builder shall store all Progress Schedule files on the Department's network servers.

The Department will not “Import” or accept Progress Schedule files from any other computer system.

Access rights within the Primavera database will be created and maintained by the Department. The Department will be the sole entity to modify the EPS structure, the OBS Structure, Project Codes, Global Activity Codes, Global Calendars, User Defined Fields, Security Profiles, Admin Categories, and Admin Preferences.

TABLE 1 – SCHEDULE FILENAME CONVENTION			
Progress Schedules	**1st Version**	**2nd Version**	**3rd Version**
Draft Baseline Progress Schedule	D26####-1DB	D26####-2DB	D26####-3DB
Baseline Progress Schedule	D26####-1BPS	D26####-2BPS	D26####-3BPS
Final Baseline Progress Schedule	D26####-1FB	D26####-2FB	D26####-3FB
Month #**1** Progress Schedule Submission	D26####-1SU**1**	D26####-2SU**1**	D26####-3SU**1**
Month #**2** Progress Schedule Submission	D26####-1SU**2**	D26####-2SU**2**	D26####-3SU**2**
As-Built Progress Schedule (Last Progress Schedule)	D26####-1AB	D26####-2AB	D26####-3AB
1st Time Impact Analysis	D26####-1TIA1	D26####-2TIA1	D26####-3TIA1
1st Recovery Schedule	D26####-1RS1	D26####-2RS1	D26####-3RS1

Primavera software and schedule data on the Department’s EPMD will generally be available for the Design-Builder’s use at all times unless system maintenance (i.e. backups, upgrades, etc.) is being performed. System maintenance will generally be conducted over short time periods between the hours of 10 PM – 6AM, Monday - Friday and on weekends. The Department does perform regular backup of data contained in the EPMD and will make every effort to restore the latest historical copy of Schedule submissions in the event of any data failure of the EPMD. The Design-Builder shall export copies of Project Progress Schedules, Recovery Schedules, and TIA Schedules, after data modifications have been made as their backup of these submissions. In the event a Design-Builder’s authorized user cannot access the software from 6AM to 10PM Monday through Friday, the Design-Builder shall provide written notification to the Project Manager.

Project schedules are developed from the Design-Builder’s knowledge of the Project, and the means and methods represented in those schedules are based on the Design-Builder’s understanding of the Contract documents, and the Design-Builder’s past experience, which are unique to the Design-Builder. Schedule activity data and logic are therefore the intellectual property of the Design-Builder and will not be made available to other Design-Builders. All other schedule data, and all Enterprise data residing on the network servers, are the sole property of the Department.

3.3.3 Prestart Schedule Meeting

The Design-Builder shall contact the Department’s Project Manager within ten (10) business days of Contract Notice to Proceed to schedule a Prestart Schedule Meeting. The purpose of this meeting is to discuss essential matters pertaining to the satisfactory scheduling of Project activities, and to resolve any known questions regarding interpretation of the contract requirements for this work.

The Project Scheduler shall be prepared to discuss the following:

1. The proposed hierarchal Work Breakdown Structure (WBS) for the Progress Schedules.
2. The proposed Project calendars.
3. The proposed Project activity codes, and various code values for each activity code.
4. Specifics of any contract Time-Related Clauses (Incentive/Disincentive, Liquidated Damages, Lane Rental, etc.);
5. The Design-Builder's schedule methodology to be employed, proposed work sequence and any proposed deviations from the contract plans with respect to Staging or Work Zone Traffic Control phasing.
6. Copies of the Key Plans shall be provided at the meeting.
7. The factors that the Design-Builder determines to control the completion of the Project and any milestone activity completion dates contained therein.
8. The Project Scheduler shall provide an outline for the content of the Narrative report for future Progress Schedule submissions.
9. Schedule submission protocol for Progress Schedule submissions.

The Design-Builder shall submit to the Department's Project Manager for review one week prior to the Prestart Schedule Meeting a copy of the Key Plans, a print out of the proposed Work Breakdown Structure, a print out of each of the proposed Project Calendars showing the Work days versus non-work days and hours per day, and a list of the Code Values for each Project Activity Code proposed to be used in the schedules.

The Department's Project Manager will be available to answer questions regarding scheduling, including: the availability of Department supplied electronic file(s) containing sample project schedule information, sample progress schedule narratives, Special Notes for CPM Scheduling, and required standard format for CPM Progress Schedules for contract work. The Design-Builder shall schedule meetings as necessary with the Department's Project Manager to discuss schedule development and resolve schedule issues, until the Final Baseline Progress Schedule is accepted by the Department's Project Manager.

The Design-Builder is encouraged, but not required, to submit a Draft Baseline Progress Schedule that demonstrates a sample of how the Project Scheduler's proposed alphanumeric coding structure and the activity identification system for labeling work activities in the CPM progress schedule will conform to the detailed requirements of this Special Provision. The review and comment by the Project Manager of the sample schedule should assist the Project Scheduler in assuring the first submittal of the Baseline Progress Schedule will be in general conformance with the requirements of this Special Provision and other contract requirements, and that major rework of the Baseline Progress Schedule will not be required. This submittal may be made anytime following the Contract Award. Critical items for this review should include but are not limited to: the proposed WBS for subsequent Progress Schedules; the proposed Project Calendars; project Planned Start date; major milestone activities (i.e. - Award, Notice to Proceed, Project Completion); and between fifty to one hundred summary activities for the major work deliverables of the Contract (i.e. – Design bridge 1, design bridge 2, construct bridge 1, construct bridge 2, etc.) that have assigned Activity Ids, Activity Descriptions, Activity Durations, Predecessors, Successors, and Activity Relationships. These summary activities will

be broken down into, or supplemented with, individual work activities for the baseline submission. To the extent practicable, the Draft Baseline Progress Schedule should include administrative and procurement activities to be accomplished during the Contract; planned submittal, review, and approval dates for shop drawings, working drawings, fabrication drawings, and Design-Builder supplied plans, procedures, and specifications.

Any submission of a Draft Baseline Progress Schedule should be accompanied by a written Narrative that provides details of the Calendar assignments of work days versus non-working days, outlines the sequence of planned operations to complete the Project Work, and provides the proposed Activity Codes and Code values to be assigned to activities in future submissions of Project Progress Schedules. The Department's Project Manager will review the logic diagram, coding structure, activity identification system, and Narrative; and provide comments for required changes by the Project Scheduler for implementation in the submission of the Baseline Progress Schedule. The Department's Project Manager will provide written comments on major deficiencies within five (5) Work Days of receipt.

3.3.4 Progress Schedule

3.3.4.1 General

In addition to the attributes of the Progress Schedule provisions as set forth in §108-01, the Design-Builder shall prepare, furnish, and maintain a computer-generated Progress Schedule using the Critical Path Method (CPM) utilizing Primavera scheduling software on the Department's network servers. The CPM Progress Schedule shall be prepared based on the principles defined by the latest issue of the Construction Planning & Scheduling Manual published by the Associated General Contractors of America, except where superseded by the Contract documents such as the Regional CPM Special Notes (if applicable) and this Special Provision.

The Design-Builder and the Department shall use the Progress Schedule to manage the Work, including but not limited to the activities of the Design-Builder, subconsultants, subcontractors, fabricators, the Department, other involved State agencies and authorities, other entities such as utilities and municipalities, and all other relevant parties.

No field work shall commence, other than installation of the Engineer's Field Office, mobilization, procurement and administrative activities, installation of construction signs, installation of erosion and pollution protection, clearing and grubbing, field measurements, and survey and stakeout, until the Final Baseline Progress Schedule has been accepted by the Department's Project Manager.

The Design-Builder will be the sole entity allowed to physically modify the following data within the Progress Schedule: activity IDs; activity descriptions; activity durations; relationships between activities; successors and predecessors, actual start and actual finish dates of activities; planned start and planned finish dates of activities; and activity resources (with the exception that activities assigned resources labeled to reflect Department personnel may be changed to reflect specific individuals, or job roles, within the Department).

The Department may modify certain data associated with the Progress Schedule to ensure conformance to the Department's Enterprise Project Management standard schedule format. This means that the Department may: create additional layouts, filters and reports; create and edit additional user defined custom data fields; assign Project Codes; add and assign additional

project Activity Codes; add and assign additional Cost Account Codes; add and assign additional Resource Codes; enter data in Notebook tabs; modify calendar ID's (although not the calendar itself); etc; that do not alter the established activities or schedule logic of the Design-Builder. The Department's Project Manager will communicate to the Design-Builder the types and scope of changes planned to be made to the Progress Schedules prior to the implementation of those changes. The Design-Builder shall not delete or modify any schedule data entered by the Department without prior approval by the Department's Project Manager. The schedule data added by the Department shall be incorporated into future schedule submissions of the Design-Builder.

The Design-Builder shall develop the Progress Schedule using, to the maximum extent practicable, the Global Activity Codes (DOT GLOBAL) identified in the Department's Primavera enterprise solution. Any schedule "Layouts", "Filters" and "Report" formats that the Design-Builder develops for the various Progress Schedules submissions to the Department's Project Manager shall be saved and made available to all other users of the Project Schedule with a name that includes the contract D#.

The Department may make copies of the Progress Schedules to perform 'what-if' type analysis, which may involve any type of modification to those copies of the schedules.

The purpose of the Progress Schedule, and scheduling provisions in the contract, shall be to:

- Ensure that the Design-Builder and the Department have a detailed plan and resources to complete the Project in accordance with contract time requirements;
- Provide a means of monitoring the progress of the Work;
- Aid in communication and coordination of activities among all affected parties;
- Analyze the effect of changed conditions on any milestone dates or on the Project Completion Date;
- Analyze the effect of change orders for extra work or deductions, and unanticipated delays, on the Project Completion Date;
- Establish a standard methodology for time adjustment analysis based on the principles of the Critical Path Method of scheduling, to analyze delays and resolve construction disputes concerning time;
- Determine appropriate extensions or reductions of Contract Time.

In scheduling and executing the Work, the Design-Builder shall:

a) Sequence the Work commensurate with the Design-Builder's abilities, resources and the Contract documents. The scheduling of activities is the responsibility of the Design-Builder.

b) Ensure that Progress Schedules prepared by the Project Scheduler for submission to the Department are in compliance with the Contract. The intent should be that Schedule submissions and accompanying Narratives are timely, complete, accurate, and in compliance with the Contract.

c) Communicate all Contract changes, and decisions or actions taken by the Design-Builder and all subconsultants, subcontractors, fabricators, etc, that effect the Progress

Schedule to the Project Scheduler in a timely manner to allow appropriate development, maintenance, and update of the Progress Schedule.

d) Include all Work contained in the Contract and all Work directed in writing by the Project Manager. Work activities directed by the Project Manager to be added to the Contract shall be included in the next Monthly Progress Schedule submission.

e) Assure that Progress Schedule Updates reflect the actual dates that Work activities started and completed in the field.

f) Break a schedule activity into multiple activities to reflect a discontinuity in the Work if a work activity is suspended in the field and restarted at a later date, and the break between when the Work was suspended to when it was resumed is significant compared to the original activity duration.

g) Ensure the Progress Schedule contains all work constraints and Milestones defined in the Contract.

h) Schedule the Work using such procedures and staging or phasing as required by the Contract. Work designated as part of separate stages may be performed concurrently with other stages where allowed by the Contract or where approved by the Department.

Failure by the Design-Builder to include any element of work required by the Contract in the accepted Progress Schedule does not relieve the Design-Builder from its responsibility to perform such work.

Should the Design-Builder choose to show activities in the schedule that reflects their plan of Work prior to the Contract Award, the Department does not incur any liability and such Work being performed between the Proposal Due Date and the Contract Award Date shall be considered at risk work.

Errors or omissions on Schedules shall not relieve the Design-Builder from finishing all work within the time limit specified for completion of the Contract.

If the Design-Builder fails to comply with the provisions of this Special Provision, the Department's Project Manager may suspend payment for any Contract Work.

3.3.4.2 **Baseline Progress Schedule**

a) The Design-Builder shall ensure the Schedule accurately reflects the proposed approach to accomplish the work outlined in the Contract documents and conforms to all requirements of this Special Provision. The Baseline Progress Schedule shall show all the activities for the design and construction for all Work in the Contract and shall indicate the date at which the Work begins and is complete. The Baseline Progress Schedule shall also show design activities including, but not limited to, the various stages of design, design checks, design reviews and the submission dates of checked designs. Any Interim Milestone(s) shall be shown in the Baseline Progress Schedule and may be used by the Department for the assessment of Liquidated Damages.

b) The schedule shall define a complete logical plan that can realistically be accomplished, to execute the Work defined in the Contract.

c) The Schedule shall comply with the work constraints and milestones defined in the Contract as well as all other contractual terms and conditions. The Schedule shall be consistent in all respects with the specific interim Time-Related Contract Provisions, and any order of work requirements of the Contract documents. The Schedule shall meet all interim milestone dates and shall not extend beyond the Project Completion Date. This submission shall reflect the Design-Builder's plan at the time of Contract Award, and prior to the start of any Work. No negative float is allowed in the Baseline Progress Schedule submission.

d) Detailed Schedule Requirements - As a minimum, the Design-Builder shall address the following in the Baseline Progress Schedule:

i) Defining Project details and defaults – Within the Dates tab, the "Planned Start" shall be either the Proposal Due Date or the Contract Award Date and the "Data Date" shall be the Notice to Proceed date. Within the Settings tab, define the Critical Activities as the "Longest Path". The Project Scheduler role does not have security privileges to change this data in the project Details tab, so requests for changes to this data needs to be forwarded to the CPMSchedulingSection@dot.ny.gov; include in your request the contract D number and the Project ID.

ii) Sufficient activities shall be included to assure that there is adequate planning for the entire Project. The appropriate number of activities will be largely dependent upon the nature, size, and complexity of the Project. In addition to all site construction activities, network activities shall include: activities necessary to depict the procurement/submittal process including shop drawings and sample submittals; the fabrication and delivery of key and long-lead procurement elements; testing of materials, plants, and equipment; settlement or surcharge periods activities; sampling and testing period activities; cure periods; activities related to temporary structures or systems; activities assigned to subcontractors, fabricators, or suppliers; erection and removal of falsework and shoring; major traffic stage switches; activities assigned to the Department and other involved State agencies and authorities, including final inspection; activities to perform punch list work; and activities assigned to other entities such as utilities, municipalities, County government/agencies, and other adjacent contractors. The Schedule shall indicate intended submittal dates, and depict the review and approval periods as defined in the Contract Documents for Department review.

The following activities, durations, and relationships shall be incorporated into the Progress Schedule:

Activity ID	Activity Description	Duration	Follows	Logic Tie	Responsible Party
M00001	Proposal Due Date	0 – Start Milestone	----	--	Design Builder
C00020	Selection of Best Value	See contract documents	M00001	FS	NYSDOT
C00035	Notification to Proceed (NTP)	0 – Finish Milestone	C00020	FF	NYSDOT
C00005	Pre-work Conference	1 Work Day	C00035	FS	NYSDOT
C00040	Prepare/Submit Safety & Health Plan	Minimum 1 Work Day	C00035	FS	Design Builder
C00045	Review & Accept Safety & Health Plan	10 Work Days	C00040	FS	NYSDOT
C00055	Set Up Engineer's Field Office	10 Work Days	C00035	FS	Design Builder
M00500	Design-Builder's First Day of Construction Work	0 - Start Milestone	C00055, C00045	FS	Design Builder
C00060	Prepare & Submit Baseline Progress Schedule	10 Work Days from receipt of NTP	C00035 C00005	FS ~~F~~S/FF	Design Builder
C00065	Review Baseline Progress Schedule	10 Work Days	C00060	FS	NYSDOT
C00070	Accept Baseline Progress Schedule	1 Work Days	C00065	FS	NYSDOT
C00075	Mobilization	Minimum 10 Work Days	M00050	SS	Design Builder
M00100	Field Work Begins	0 - Start Milestone	C00055, C00070, C00075, M00500	SS	Design Builder
M00900	Substantial Completion	0 - Finish Milestone	See contract documents	FF	Design Builder
C09010	Other Agency Inspection	20 Work Days	M00900	FS	Others
C09020	NYSDOT Inspection	20 Work Days	M00900	FS	NYSDOT

Activity ID	Activity Description	Duration	Follows	Logic Tie	Responsible Party
C09030	Punchlist work	20 Work Days	C09010, C09020	FS	Design Builder
C09040	Demobilization	Minimum 10 Work Days	C09020 C09030	FS FF	Design Builder
M00950	Design-Builder's Last Day of Work	0 - Finish Milestone	C09040	FF	Design-Builder
M00999	Anticipated Project Completion	0 - Finish Milestone	M00950	FF	Design-Builder

Note - The Logic Ties shown shall be used as a relationship from the Predecessor to the Activity in the same row.

iii) **Work Breakdown Structure (WBS)** - A multi level hierarchal WBS shall be incorporated. The levels (nodes) shall include, but not be limited to:

Level 1- is the project level; and shall have the project name.

Level 2- Shall have seven nodes, "REPORTING MILESTONES", "PLANNING", "DESIGN", "ROW", "PROJECT PROCUREMENT", "CONSTRUCTION", and "PROJECT MANAGEMENT"

Level 3- shall have three nodes under "CONSTRUCTION": "PRE-CONSTRUCTION"; "CONSTRUCTION OPERATIONS"; and "POST CONSTRUCTION/CLOSEOUT". In addition, shall have at least two nodes under Design: Design Unit design and review.

For all projects under "PRE-CONSTRUCTION" a fourth level of the WBS shall consist of at least the following four sub nodes: "GENERAL SUBMITTALS", "SHOP DRAWINGS", "PROCUREMENT/FABRICATION/DELIVERY", and "UTILITY COORDINATION".

Under the "CONSTRUCTION OPERATIONS" node, the grouping of activities may vary depending on the scope and nature of the project work. The Design-Builder shall coordinate with the NYSDOT Project Manager to determine the best way to represent (group activities) the project deliverables (i.e. Bridge, Roundabout, Highway segment, Interchange, Intersection, etc). The NYSDOT Project Manager may require sub nodes for AREA (geographic area within the project limits), STAGE, or for a bridge project SUBSTRUCTURE, SUPERSTRUCTURE, and DECK.

Generally Level 4 would be by geographic area within the project limits, Level 5 would be by highway feature (bridge, highway segment, intersection), Level 6 the highway features should be broken into their components; such as, a bridge into components such as Substructure, Superstructure, and Deck, or a highway segment into components such as pavement, drainage, earthwork, lighting, traffic signals, etc.

An example Work Breakdown Structure is shown below in Figure 1

FIGURE 1

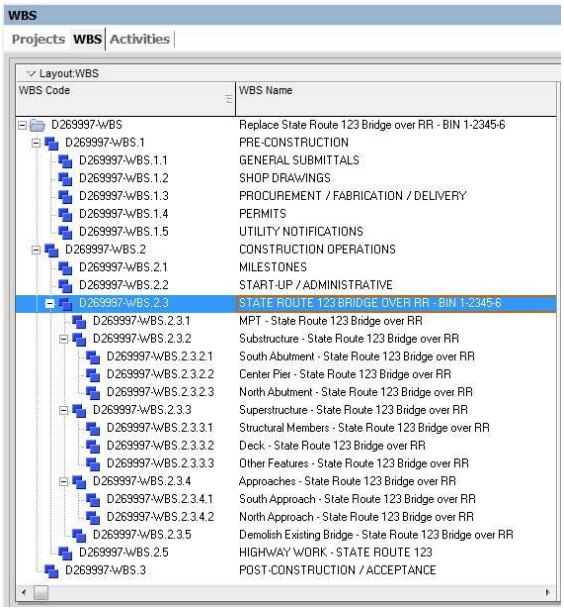

iv) **Activity ID** - Include a unique identification number for each activity. Activity ID numbers shall not be changed, or reassigned. Task type Activity IDs shall be prefixed by a “C”. Milestone type activities shall be prefixed by an “M”.

v) **Activity Name** - Clearly and uniquely define each activity name with a description of the work that is readily identifiable to inspection staff and the progress of each activity can be measured. Each Activity shall have a narrative description consisting at a minimum of a verb or work function (i.e. form, pour, excavate, etc), an object (i.e. slab, footing, wall, etc), and a location (i.e. STA, bridge or retaining wall number, street, etc). The work related to each Activity shall be limited to one Area of the Contract, one Stage of the Contract, one WZTC Phase of the Contract, and one Responsible Party of the Contract. The Activity Name shall not be changed for the duration of the contract without approval of the NYSDOT Project Manager.

vi) **Milestone Type Activities** - Include activities for all Contract milestones that define significant contractual events such as Contract Award, Notice to Proceed, Design-Builder Start Work, Substantial Completion Date, Project Completion Date, and coordination points with outside entities such as utilities, State agencies, Authorities, municipalities, Time-Related Contract Provisions, etc.

All milestone activities in the Schedule shall be assigned the standard Global calendar named ‘NYSDOT Milestone/Curing 365 Day / 8 hour”, this calendar should also be assigned to any activities for concrete curing.

- The Contract Award milestone shall have a primary constraint of “Finish On” and the date of Contract signature by the State Comptroller,
- The Project Completion milestone shall have a primary constraint of “Finish on or before” and the Project Completion Date.

- The Design-Builder Start Work" Start milestone activity, that will eventually reflect the actual date the Design-Builder started Work authorized under the contract.

All maintenance type work activities, such as maintaining temporary concrete barrier or rodent control, such be shown on the schedule with Start and Finish milestone type activities not task dependent activities.

vii) **Activity Durations** – Define the Original Duration of each activity in units of whole work days, except for activities of less than one day duration which should be shown in units of tenths of a day. Except submittal/procurement activities, durations shall not exceed 15 work days unless approved by the Department's Project Manager. Durations for Department submittal reviews shall meet the requirements set forth in the Contract documents. If requested by the Department's Project Manager, the Design-Builder shall justify the reasonableness of planned activity time durations. Task Dependent activities shall not have zero durations.

viii) **Production Rates** – For each non-administrative work activity in the schedule the Design-Builder shall enter the quantity of the predominate item of the work activity into the field labeled "PR Quantity", the Unit of Measure for that item in the field labeled "PR Unit", the anticipated production rate of the equipment and labor (crew) resources for that work activity in the field labeled "Production Rate / Day", and the associated duration for that work activity in the field labeled "PR Duration". These are all Activity level UDF fields, and can be found in the activity Layout named Contractor Production Rates. If requested by the Department's Project Manager, the Design-Builder shall furnish other information needed to justify the reasonableness of activity durations.

ix) **Activity Relationships** - Clearly assign predecessors and successors relationships to each activity and assign appropriate logic ties between activities (Finish to Start, Start to Start, Finish to Finish, etc.). Do not have any open ended activities, with the exception of the first activity and last activity in the schedule. An activity may only appear once as a predecessor or successor to another specific activity, but may be assigned as a predecessor or successor to many different activities. Do not include inappropriate logic ties with Milestone activities (For a finish milestone activity: a predecessor shall only be assigned a Finish to Finish logic tie, a successor shall only be assigned a Finish to Start or Finish to Finish logic tie. For a start milestone: a predecessor shall only be assigned a Finish to Start or Start to Start logic tie, a successor shall only be assigned with a Start to Start logic tie). Lag time may not exceed 10 days for Start to Start or Finish to Finish relationships. The Design-Builder shall not use negative Lag times. The Design-Builder shall not use lags with Finish to Start relationships.

x) The Design-Builder shall assign the "Contract Award Date" activity as a predecessor to all Review and Approval type activities to be performed by Department staff.

xi) **Activity Constraint Dates** – The Design-Builder shall not have any constrained activities, with the exception of contractual dates, unless the Department's Project Manager accepts such constraints in writing. Milestone activities shall be included for the Contract Award which shall have a primary constraint of "Finish On" and the date of Contract signature by the State Comptroller, and for the anticipated Project Completion Date which shall have a primary constraint of "Finish on or before" and the Project Completion Date indicated in the Contract documents. Only

contractual/owner-designated constraints are allowed unless specifically authorized by this Special Provision or the Department's Project Manager. If used, only Constraints of type, "Finish on or Before", 'Start on or After", or when deemed appropriate by the Engineer "As-Late-As-Possible" are acceptable.

xii) **Activity Dates** – With the exception of contract Milestone dates, "Actual Start" and "Actual Finish" dates and "Planned Start" and "Planned Finish" dates, activity dates shall be calculated by the project scheduler tool within the Primavera software. No Actual Start or Actual Finish dates shall be entered in the Baseline Progress Schedule, with the exception of activities that were completed prior to the Contract Award.

xiii) **Calendars** - Use clearly defined calendars that account for expected seasonal weather conditions (including winter shutdown periods) and environmental permit requirements, for the planning and scheduling of activities. Do not incorporate an activity with a description of "Winter Shutdown" that requires constraints. Provide the work days per week, holidays, the number of shifts per day, and the number of hours per shift by using the Calendar feature called "Time Periods" in the P6 software. Incorporate any seasonal restrictions to the work within calendars assigned to activities.

- Global calendars used in the Progress Schedule shall be those established by the Department. There are only two Global Calendars developed and maintained by the Department for use by Design-Builder's, they are the following:
  - NYSDOT Milestone/Curing 365 Day / 8 hour
  - State Business Days, 5 Day Work Week w/State Holidays, Field

Changes desired for these calendars shall be forwarded to CPMSchedulingSection@dot.state.ny.us, and if appropriate these changes will be performed by the Office of Construction system admin staff. This will be accomplished by making a copy of the existing Global calendar; the new calendar will then be renamed and modified as necessary.

- Calendars related to specific resources (i.e., a specific person or piece of equipment) shall be established as Resource Calendars, with the Calendar name clearly identifying the resource.
- All other calendars developed by a Design-Builder shall be established as Project Calendars, with the calendar name including the contract D# and describing the function (i.e., D260000 - Asphalt Calendar, D260000 - Concrete Calendar, D260000 - Landscape Calendar, D260000 - Painting Calendar, D260000 – Design-Builder's 5 Day/8 Hour Workweek). All work activities of the Design-Builder shall be assigned to Project Calendars.
- Activities for shop drawing reviews and other approvals by Department personnel shall be assigned the Department's standard Global – "State Business Days, 5 Day Work Week w/State Holidays, Field" Calendar that reflects all holidays observed by the State.
- The Baseline Progress Schedule can not include a calendar that reflects any workers working more than 8 hours in any one calendar day or more than 5 days in any one week. (§102-7 LABOR AND EMPLOYMENT) Following the Contract

award the Design-Builder can add additional calendars in their next Monthly Progress Schedule submission based on an approved overtime dispensation.

xiv) Clearly define significant interaction points between the Design-Builder, the Department, and other entities including but not limited to: Federal, State and local agencies/authorities; and utilities. All activities of the Department, utility companies, adjacent contracts, and other entities that affect progress and influence any contract required dates including durations shall be shown in the Schedule. This includes dates related to all Permits or Agreements. The Schedule shall give special consideration to sensitive areas such as road closures and parklands and shall indicate any time frames when work is restricted in these sensitive areas as outlined in the permits issued by the regulatory agencies, and provided in the Contract documents.

xv) **Activity Resources** – The Design-Builder is required to enter the major equipment resources to the appropriate activities in the Schedule, these shall include pile drivers, large cranes, asphalt paving equipment, and concrete finishing machines.

It shall be the Design-Builder's responsibility to assure the activity logic in the Schedule properly reflects their resource limitations. If the Design-Builder anticipates multiple crews for the same Schedule activity, these resources shall be documented in the Schedule narrative. As an activity can have only one responsible party, no activity shall involve multiple crews comprised of the Design-Builder and a subcontractor, or multiple subcontractors.

xvi) **Activity Codes** – The Design-Builder shall include a well-defined activity coding structure that allows activities to be sorted and filtered. Activity Codes shall be developed and assigned as needed by the Project Manager to facilitate the use and analysis of the Schedule.

- No Global Activity Codes shall be incorporated in any Progress Schedule submission to the Department's Project Manager except those established by the Department.
- The Design-Builder shall assign the appropriate activity code values to each activity in the Progress Schedule for the following Global Activity Codes that are in the Department's enterprise database:
    1) RESPONSIBLE PARTY (DOT GLOBAL)
    2) STAGE (DOT GLOBAL)
    3) AREA (DOT GLOBAL)
    4) TYPE OF WORK (DOT GLOBAL)
    6) CHANGED (ADDED/DELETED) WORK (DOT GLOBAL)
    7) TIME Related Clauses (DOT GLOBAL)
    8) DELAY (DOT GLOBAL)
    9) DBE (DOT GLOBAL)
- Additional Activity Codes developed for specific projects shall be established as Project Activity Codes. As a minimum this shall include the following:
    1) SUBCONTRACTOR

xvii) **Activity Code Values** – Each Activity Code shall be broken down into various Activity Code Values that are then assigned to activities. For example, the Activity Code "Stage" shall include a hierarchal arrangement of Activity Code Values as shown below in Figure 2:

FIGURE 2

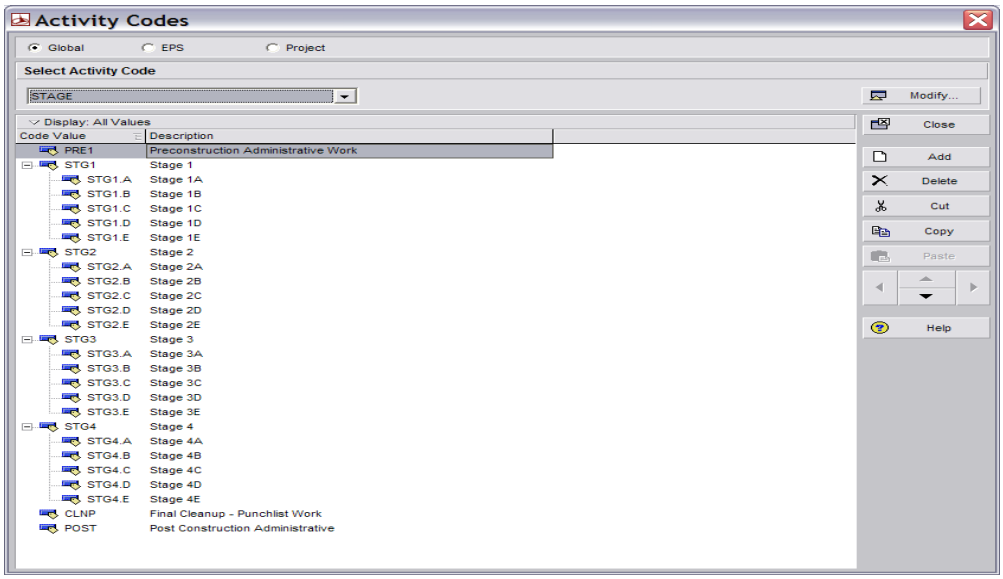

xviii) **Activity Code Assignments** - For each activity, within the activity details the Design-Builder shall assign Activity Code values to identify the "Responsible Party" (i.e. – Design-Builder, NYSDOT, Utility Co, Municipality) for the work to be performed (one and only one responsible party shall be assigned to each activity), the "Stage" of the contract for the work that will be performed, the "Area" where the work is to be performed, the "WZTC Phase", and the Type of Work (i.e. - Procurement, Paving, Embankment, Excavation, Electrical, Signing, etc). For activities included in work governed by time-related contract provisions, the appropriate "Time Related" activity code shall be utilized. For activities included in work added and/or changed within an Order-On-Contract, the appropriate "Added/Changed Work" code shall be utilized. For all work activities performed by the Design-Builder or subcontractors/fabricators/suppliers, "Contactor" shall be designated as the Responsible Party. If the Design-Builder wants a separate activity code to enable sorting the activities of subcontractors, fabricators, or suppliers a separate "Subcontractor" code shall be utilized.

xix) **Interim Milestone Completion Dates with Liquidated Damages and Special Time-Related Contract Provisions** (i.e. – Incentive/Disincentive provisions, Lane Rental) – Each time-related contract provision in the Contract shall be represented in the Progress Schedule by having a start and finish milestone, with appropriate predecessors and successors assigned to all Schedule activities considered part of that time-related contract provision work including the start and finish milestone activities. The Start milestone for the time-related Contract work shall have predecessors and/or date constraints assigned that include those defined in the Contract documents, and the Finish milestone for the time-related Contract work shall have successors and/or date constraints assigned that include those defined in the Contract documents. All Schedule activities associated with each specific time-related contract provision shall be assigned to a separate node within the project

WBS and the WBS node description shall be labeled accordingly, in addition these activities shall be assigned the appropriate Time-Related Clauses (DOT GLOBAL) activity code value. A Level Of Effort activity shall be used for each time related contract provision (i.e - "Incentive 1 Duration" or "B Clock 1 Duration"), this activity shall have the Start Milestone as a predecessor with a SS relationship and the Finish Milestone as a successor with a FF relationship and the duration of this activity shall be calculated when the project is scheduled.

xx) **Baseline Narrative** - Include a narrative in Microsoft Word and/or Adobe Acrobat format that includes the following topics and attachments:

- **Contract Identification.** Include the contract D number, project name, project location, and name of the Design-Builder.
- **Key milestone dates.** Include the actual Contract Award Date, original and adjusted Project Completion Date, Substantial Completion Date, and anticipated completion of all Project Work. Also include any contract Interim Milestone dates (I/D, B-Clock, LD, etc), and scheduled Start and Finish dates for those Milestone activities.
- **General approach.** Describe the Design-Builder's general approach to construct the Work outlined in the baseline schedule. Address the reasons for the sequencing of work and describe any resource limitations, potential conflicts, and other salient items that may affect the schedule and how they may be resolved.
- **Key Plan**s. If not provided in the Contract plans, or if modified by the Design-Builder, provide copies of the appropriate Contract plan sheets marked up to correlate values on the Contract plans (for Area of Work, Stage of Work, and WZTC Phase) to the Design-Builder's planned breakdown of the project (ie- Activity Codes, Activity Descriptions) for scheduling purposes.
- **Logic Justifications.** The justification(s) for each activity with a duration exceeding 15 working days. The justification(s) for Design-Builder imposed activity constraints proposed in the schedule. The reason for any lags assigned to any activities.
- **Calendars.** Include a list of calendars which have been incorporated in the Schedule, and for each calendar the general reason for its use in the Schedule.
- **Critical Path issues.** A brief discussion of the critical path shown in Appendix 2, highlighting any potential challenges that are foreseen associated with the critical path work.
- **Coordination issues.** Outline any anticipated coordination issues related to work activities by other entities that require additional information from, or action by, the Department's Project Manager.
- **APPENDIX 1 – Scheduling/Leveling Report.** This appendix in Adobe Acrobat PDF file format, formatted to fit standard ANSI Size A (Letter) size paper (8.5 inch x 12 inch) (215 mm x 279 mm) paper, printed with portrait orientation, shall be included with the narrative as a separate file.

  A complete Scheduling/Leveling Report (SCHEDLOG.TXT file generated by the Department's Oracle-Primavera scheduling software application) which includes the Schedule Settings, Statistics, Errors, Warnings, Scheduling/Leveling Results, Exceptions, Activities with unsatisfied constraints, Activities with unsatisfied relationships, and Activities with external dates. The statistics shall include, # of

Activities, # of Activities Not Started, # of Activities In Progress, # of Activities Completed, # of Activity Relationships, and # of Activities with Constraints. Total number of activities on the critical path, percent complete, activities without predecessors, activities without successors, and activities out of sequence.

- **APPENDIX 2 – Progress Schedule plot.** This appendix in Adobe Acrobat PDF file format, formatted to fit ANSI Size B (Ledger) paper (11 inch x 17 inch) (279 mm x 431 mm) paper, printed with Landscape orientation, shall be included with the narrative as a separate file.

  Appendix 2 to the narrative shall be an electronic schedule plot (Adobe Acrobat format) using the Global Layout named "Baseline Schedule submission", with activities sorted by Start Date in ascending order, Grouping of activities by WBS, and only the "Longest Path" filter applied. This plot shall provide a clear critical path from the Data Date to the last activity in the schedule. Graphical representations shall be shown at a suitable scale to be legible and readable.

xxi) **List of Submittals –** The Design-Builder shall submit with the Progress Schedule a list of all Submittals (i.e. – design plans, project specification, shop drawings, required permits, erection/demolition plans, Health and Safety Plan, Reference Part 3, Section 2.3, etc.) generated from the Baseline Progress Schedule for review and acceptance by the Department's Project Manager. The Design-Builder shall use a Filter to limit the schedule activities shown in the report to only the prepare/submit, and review/approve activities related to submittals. The report shall be in Adobe PDF format and transmitted to the Project Manager by email. This list shall be revised and updated monthly with each schedule submission.

e) Schedule Submission

i) Within the timeframe indicated in Table 2 column 1, submit one electronic copy of the Baseline Progress Schedule in a Critical Path Method (CPM) format for the Department Project Manager's review and acceptance.

TABLE 2 (IN WORK DAYS)

Timeframe from receipt of Notice to Proceed to Submission of complete Baseline Schedule. (Column 1)	Timeframe for Department Project Manager's Review (Column 2)	Timeframe from Notice to Proceed to acceptance by the Department's Project Manager not to exceed (Column 3)
10	10	40

ii) The Department's Project Manager will review the schedule and return it, accept it with comments, or reject it within the timeframes indicated in Table 2 column 2, following the date of receipt of the Design-Builder's submission.

iii) If the schedule is returned with comments, the Design-Builder shall address all comments and revise the schedule as necessary. The Design-Builder shall complete the Final Baseline Progress Schedule and obtain the acceptance of the Department's Project Manager within the timeframe required in Table 2 column 3.

iv) If the schedule is accepted by the Department's Project Manager without any comments, the Design-Builder shall copy the schedule and rename it for submission as the Final Baseline Progress Schedule.

v) In no way does the Baseline Progress Schedule modify the Contract documents.

vi) The Design-Builder shall assign appropriate Activity Codes and provide custom Layouts, Filters, and/or report formats necessary to allow the Project Manager to generate a report from the each Progress Schedule submission of all submittals required under the Contract (i.e., shop drawings, required permits, erection/demolition plans, etc). The list shall show scheduled submission date, review date, and acceptance date for each submittal and identify the earliest activity affected by each of these submittals. This list shall be generated from each Progress Schedule submission until all such activities are completed.

3.3.4.3 **Final Baseline Progress Schedule**

a) If the Baseline Progress Schedule is returned to the Design-Builder with comments, the Design-Builder shall make a copy of the schedule and rename it as the Final Baseline Progress Schedule with comments addressed and revisions made as necessary. The Design-Builder shall complete the Final Baseline Progress Schedule and obtain acceptance of the Department's Project Manager within the timeframe required in column 3 of Table 2, or within one week of the Design-Builder's receipt of the final comments by the Department's Project Manager, whichever is sooner.

b) The Department's Project Manager will review the schedule and return it, accepted or with comments, within 5 Work days following the date of receipt of the Design-Builder's submission.

c) The Final Baseline Progress Schedule must be "accepted" or "accepted as noted" by the Department's Project Manager prior to the Department evaluating any Design-Builder disputes associated with time impacts. This does not preclude the Design-Builder from submitting a dispute while the schedule is being reviewed for acceptance.

3.3.4.4 **Monthly Progress Schedule Submissions.**

a) First Monthly Progress Schedule Submission – Within three Work Days following acceptance of the Final Baseline Progress Schedule, the Design-Builder shall perform a Progress Schedule Update to reflect the status of all activities where work was performed in the time period between the start of work and acceptance of the Final Baseline Progress Schedule. This shall include actual dates entered in the Actual Start and Actual Finish columns, and Remaining Duration for activities where work has commenced but has not been completed, in addition the Design-Builder shall incorporate any Progress Schedule Revisions that reflect any changes in how future work activities are to be completed.

b) Subsequent Monthly Progress Schedule Submissions - On a monthly basis, the Design-Builder shall submit a copy of the current Progress Schedule that includes all Progress Schedule Revisions and Progress Schedule Updates to reflect the actual and planned prosecution and progress of the contract work. Progress Schedule Updates shall reflect the status of activities that have commenced or have been completed, including the following items: (a) actual dates in activity Actual Start and Actual Finish columns as appropriate; (b) actual Remaining Duration for activities commenced and not complete; and (c) actual activity Suspend or Resume dates for activities commenced and not complete. Progress Schedule Revisions reflect modifications made to activities in the current project baseline schedule in any of the following items: (a) activity Original Duration; (b) changes in logic connections between activities; (c) changes in

Constraints; (d) changes to Activity Descriptions; (e) activity additions or deletions; (f) changes in Activity Code assignments; (g) changes in Calendar assignments, (h) Productivity Rates. All "Out of Sequence" activities noted in the scheduling log shall be corrected to reflect the current construction operations.

When preparing a formal submission of the Progress Schedule, the Design-Builder shall make a copy of the current Progress Schedule and name it according to the file naming convention provided by the Department in Table 1.

c) Additional Schedule Requirements - In addition to the schedule requirements detailed for the submission of the Baseline Progress Schedule, the following shall be provided by the Design-Builder:

i) Data Date - the “Data Date” shall be the date the Project Scheduler last edits the schedule prior to submission to the Department’s Project Manager. The Project Scheduler shall enter the Data Date through the Schedule (F9) tool.

ii) Activity Status Tab -

a. Durations – the Original Duration shall not be changed without prior written justification by the Design-Builder, and written approval by the Department’s Project Manager. The Design-Builder shall edit the Remaining Duration to reflect progress made on work activities, and shall not use Duration %. If a proposed change to Original Duration is due to additional or changed work to the contract the Design-Builder shall instead add an activity to reflect this additional work, and assign the appropriate Activity Code. The Design-Builder shall not use zero durations for Task Dependent activities.

b. Started and Finished dates – for each activity where work was begun during the month, the Design-Builder shall check the box adjacent to Started and enter the date the work began. For each activity where work was completed during the month, the Design-Builder shall check the box adjacent to Finished and enter the date the work was completed.

c. Suspended work – The first time that work has been suspended on a schedule activity, the Design-Builder shall enter the Suspend and Resume fields within the Project Details under the Status tab. For any subsequent suspensions of work to that activity the Design-Builder shall break that activity into two or more activities to accurately reflect the suspension and resumption of work dates in the field, and to more accurately reflect the relationship to other work activities.

iii) Calendars – To change a Project calendar for activities scheduled in the future, the Design-Builder shall copy the calendar and use a revised name that includes a reference to which Monthly Update the change was incorporated (i.e. - D260000 - Concrete Calendar should be revised to D260000 – 2 - Concrete Calendar to reflect the 2nd Monthly Update when the change was made to the calendar). The reason for the change in the calendar shall be documented in the Narrative.

iv) Notebook Tab –

a. Delays - For any activities on the critical path that are delayed during this monthly reporting period, the Design-Builder shall enter the dates the activity was delayed and the reason for such delay in the Notebook tab of that activity.

b. Activity Changes – For any changes to activity logic, calendar assignments, suspended work, added or revised lag periods or constraints the Design-Builder shall document the change and reason in a Notebook Topic for that activity by assigning the appropriate "Progress Submission # Revision" and describing the changes.

v) Production Rates – For any activities where the work to be performed is similar in nature to work already performed on the same Project and that the Production Rate for the work to be performed is different than the actual Production Rate for work already performed, the Department's Project Manager may require the Design-Builder to adjust the Duration for the work to be performed to reflect the more appropriate Production Rate.

vi) Deleted work – If work has been deleted the corresponding work activities in the schedule shall be deleted. The Design-Builder shall not just zero the activity duration since the calendar assigned to the zero duration activity shall still affect the logic of future work activities.

d) Monthly Progress Schedule Narrative - For each Monthly Progress Schedule submission, the Design-Builder shall submit a narrative in Microsoft Word, or Adobe Acrobat format that includes, but is not limited to the topics from the Baseline Narrative and the additional topics below:

i) **Project Progress.** Discuss the progress that was made during the current reporting period, and document any Total Float gained or recovered during the period. For major work items describe the differences between the actual work performed and the work planned for the period as represented in the preceding Progress Schedule submission, including explanations for the deviations.

ii) **Suspended Work.** For all suspended work activities that could otherwise logically be progressed, identify the responsible party prohibiting the progression of the work, as well as the detailed reasons why.

iii) **Project Delays.** Discuss any delays experienced during the current reporting period. Quantify any relative change in Total Float for the project since the last Progress Schedule submission. For each activity on the critical path (include Activity ID's and Activity Descriptions) where work was delayed during the reporting period, provide the following detailed information including:

- the extent in days (negative float) of the delay, and events that caused the delay.
- the party(s) responsible for the delay event(s).
- the other activities in the construction schedule affected by the events.
- the reasonable steps needed to minimize the impact of the delay, and which party needs to take the action(s).

The Design-Builder is reminded of the requirements of Notice & Recordkeeping as found in DB Section 104-06 as it relates to Disputed Work. The Design-Builder shall include a copy of any notice provided to the Project Manager for any time-related delay dispute as part of their narrative.

iv) **Project Issues.** List any other problems experienced during this Progress Schedule submission period, the party responsible for the problems, and the Design-Builder's

intentions to resolve the issue(s).List all activities for procurement of long lead time materials that are behind schedule and the reason(s) why.

v) **Schedule changes.**

- List of all added or deleted activities included in this Progress Schedule submission, and the reason(s) for and the impact(s) of such changes.
- List all changes in activity Original Durations, the justification for such change(s), and the impact(s) of such changes.
- List all changes in relationships between activities included in this Progress Schedule submission, and the reason(s) for and the impact(s) of such changes.
- List any addition or deletion of activity or project constraints, and the reason(s) for and the impact(s) of such changes.
- List all changes to the project calendars, and the reason(s) for and the impact(s) of such changes.

vi) List all activities for procurement of long lead time materials that are behind schedule and the reason(s) why.

vii) For major work items describe the differences between the actual work performed and the work planned for the period as represented in the preceding Progress Schedule submission, including explanations for the deviations.

viii) Description of any changes to the critical path since the last Monthly Progress Schedule submission and the impacts of such changes.

ix) The major work elements, as defined in the WBS, to be accomplished during the next monthly work period.

x) Any potential problems that are anticipated for the next monthly work period and the proposed solutions to such problems. Identify potential problems or risks that either the Department or Design-Builder may be potentially responsible for. Explain what action the responsible party (i.e. - Department or Design-Builder) needs to take and the date by which time the action needs to be taken to avoid the problem.

xi) Any planned acceleration of activities that the Design-Builder anticipates to undertake within the next monthly work period that either the Department directed, or that the Design-Builder believes is necessary.

xii) The following appendix in Adobe Acrobat PDF file format, formatted to fit ANSI Size E paper (34 inch x 44 inch) (863 mm x 1117 mm) paper, printed with Landscape orientation, shall be included with the narrative as a separate file.

- APPENDIX 1 – A listing of all work activities as of the Data Date, using the NYSDOT Appendix 1 activity layout, sorted by Finish date, Total Float in increasing order, showing the Activity ID, Activity Name, Original Duration, Remaining Duration, Actual Duration, Total Float, Early Start date, Start date, Finish date, Late Finish date, and Calendar ID. The grouping of activities shall be by WBS. The Gantt Chart shall clearly indicate all activities in the schedule. Graphical representations shall be shown at a suitable scale to be legible and readable.

xiii) The following appendix in Adobe Acrobat PDF file format, formatted to fit ANSI Size B (Ledger) paper (11 inch x 17 inch) (279 mm x 431 mm) paper, printed with Landscape orientation, shall be included with the narrative as separate files.

- APPENDIX 2 – A listing of all work activities as of the Data Date, using the NYSDOT Appendix 1 activity layout, sorted by Finish date, Total Float in increasing order, showing the Activity ID, Activity Name, Original Duration, Total Float, Start date, Finish date. There shall be no Grouping of activities, and the global Filter for Longest Path shall be applied. The Gantt Chart shall clearly indicate the project critical (longest) path, with logic lines. Graphical representations shall be shown at a suitable scale to be legible and readable.

xiv) The following appendix in Adobe Acrobat PDF file format, formatted to fit standard ANSI A (Letter) size paper (8.5 inch x 12 inch) (215 mm x 279 mm) paper, printed with portrait orientation, shall be included with the narrative as a separate file.

- APPENDIX 3 – A complete Scheduling/Leveling Report file generated by the Department's Primavera scheduling software application which includes the Schedule Settings, Statistics, Errors, Warnings, Scheduling/Leveling Results, Exceptions, Activities with unsatisfied constraints, Activities with unsatisfied relationships, and Activities with external dates. The statistics shall include, # of Activities, # of Activities Not Started, # of Activities In Progress, # of Activities Completed, # of Activity Relationships, and # of Activities with Constraints. Total number of activities on the critical path, percent complete, activities without predecessors, activities without successors, and activities out of sequence.

e) For any contract time extension requests the Design-Builder shall include: a Time Impact Analysis (TIA) for any changes to the schedule for future work for such issues as Added Work, VECP, or Changed Conditions; and a Delay Analysis that documents all delays from the Contract Award to the current date that is based on critical path delays that occurred when comparing subsequent Monthly Progress Schedule submissions and the supporting delay documentation in the Monthly Schedule Narratives.

f) Monthly Progress Schedule Submission - The Design-Builder shall submit the Monthly Progress Schedule to the Department's Project Manager with a regularly recurring data date, as specified by the Department's Project Manager. The schedule submission to the Department's Project Manager shall be made within three (3) Work Days of the Data Date, whether or not the Department's Project Manager has accepted the previous Monthly Progress Schedule submission. Schedule submittals will only be considered complete when all documents and data have been provided.

Prior to submitting the schedule, the Project Scheduler shall "Schedule" the project, when scheduling the project the Scheduling Options shown in Figure 3 shall be used unless approval to vary from these settings is given by the Department's Project Manager. The Project Scheduler shall use the same Scheduling Options for all Progress Schedule submittals for the duration of the contract, unless directed otherwise by the Department's Project Manager.

FIGURE 3

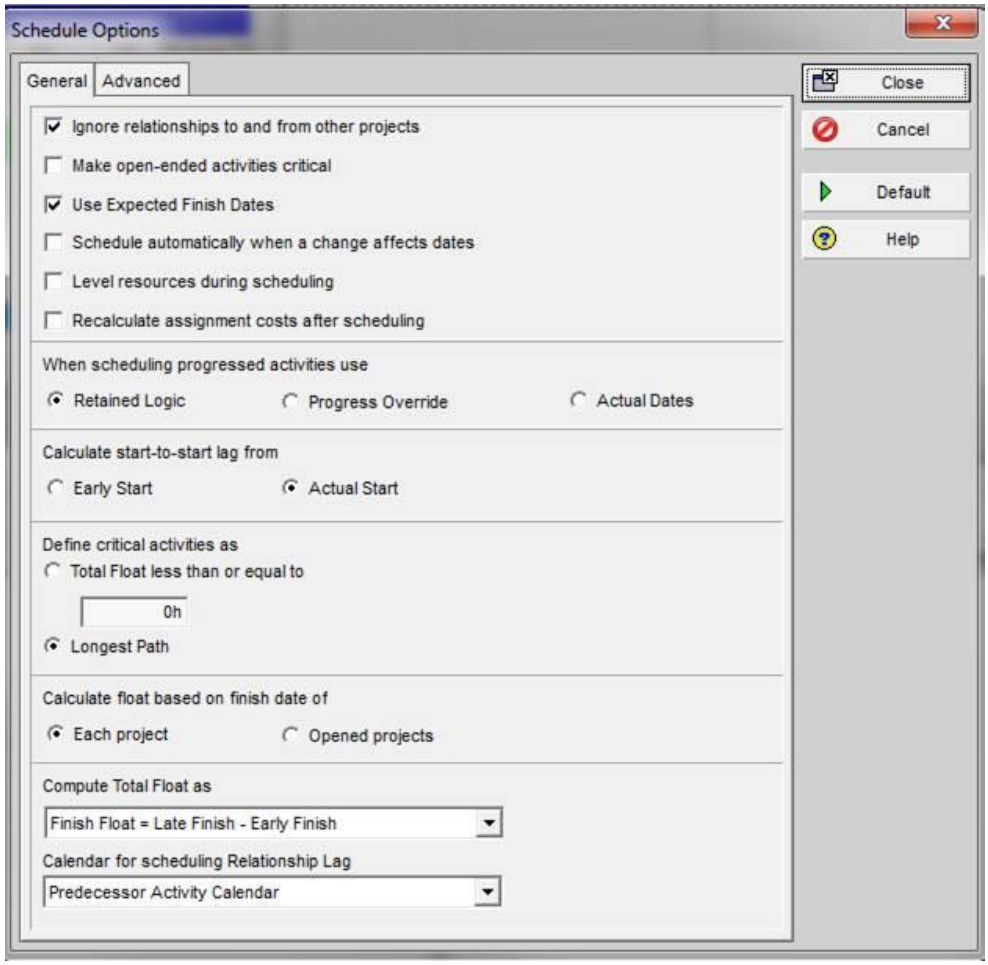

g) Schedule Submission Method - The Design-Builder shall submit the schedule to the Department's Project Manager electronically for review and acceptance. The filename shall conform to the requirements of Table 1. The Project Scheduler can change the Project ID and Name through the WBS at the top node, as they do not have privileges to edit data through the Project Details tab. The Design-Builder's submission shall be documented by an E-mail to the Department's Project Manager, with a copy to CPMSchedulingSection@dot.ny.gov and all appropriate project participants, that the project schedule on the network is ready for review. The Design-Builder's E-mail to the Department's Project Manager shall also consist of the following:

i) The subject of the E-mail shall include the Region #, contract D number, the Project Name, the Progress Schedule's ProjectID, and Design-Builder company name. (i.e. – Region 8, D260000, Rehabilitation of Main Street viaduct, D260000-1UD2, ABC Contractors)

ii) The E-mail message shall include the name of the Department's Project Manager, the current anticipated Finish date of the last activity in the Project Schedule, a statement as to how that date compares to the current Project Completion Date.

iii) Electronic files of all Narrative Reports and required attachments and appendices associated with the schedule shall be submitted by the Design-Builder in Adobe Acrobat format.

3.3.4.5 **Weekly Progress Schedule Status Report:**

1) The Design-Builder shall provide the Weekly Progress Schedule Status Report on a consistent and recurring basis of once per week. The Project Scheduler shall advance the data date to the current week, update the actual progress completed to date, forecast the remaining duration for all activities still in progress, and schedule the project. The Design-Builder shall generate and submit the following activity layouts to the Department's Project Manager:

   i. Weekly Status Report using the global activity layout named Weekly Status Report;

   ii. Critical Path to Project Completion as directed by the Department's Project Manager;

   iii. Near Critical Paths as directed by the Department's Project Manager;

   iv. Multiple float paths and Longest Paths to project milestones and project features as directed by the Department's Project Manager;

   v. Three month look-ahead as directed by the Department's Project Manager;

   vi. Other activity layouts as directed by the Department's Project Manager.

2) The Weekly Progress Schedule Status Reports shall commence within 3 weeks of Notice to Proceed. Weekly Progress Schedule Status Reports shall be provided the day before progress meetings. In the absence of the accepted Final Baseline Progress Schedule, the Weekly Progress Schedule Status Reports shall be submitted at the request of the Department's Project Manager.

3) The Design-Builder shall submit the Weekly Progress Schedule Status Reports to the Project Manager within two (2) Work Days of the Data Date for that weekly update period. The Gantt Chart shall clearly indicate the project critical (longest) path. Graphical representations shall be shown at a suitable scale to be legible and readable.

4) During any time periods within the contract that special time-related contract provisions are in effect, including Incentive/Disincentive Periods, the Project Manager may require more frequent Progress Schedule Updates and/or Progress Schedule Status Reports.

3.3.4.6 **As-Built Progress Schedule**

The Design-Builder shall submit the As-Built Progress Schedule with Actual Start and Actual Finish dates for all activities, within ten (10) Work Days following final acceptance of work by the Department.

3.3.5 Progress Schedule Review and Analysis

3.3.5.1 **Immediate Rejection of Progress Schedule Submissions.**

The following deficiencies in a Design-Builder's Progress Schedule submission shall be grounds for the immediate rejection by the Department's Project Manager, without further review, analysis and/or comments.

a) Failure of the Project Scheduler to "schedule" the Project, as of the Data Date.

b) Failure to attach a copy of the complete Scheduling/Leveling Report (SCHEDLOG.TXT

file generated by Primavera software application).

c) Any activities without predecessors, or activities without successors, appearing in the Scheduling/Leveling Report with the exception of the first and last activity in the schedule.

d) Any activity constraints appearing in the Scheduling/Leveling Report that have not been approved in writing by the EIC, or that are not specifically allowed by this Special Provision.

e) Any Activities with Actual Dates > Data Date appearing in the Scheduling/Leveling Report.

f) Any Milestone Activities with invalid relationships appearing in the Scheduling/Leveling Report.

g) Failure to have a clearly defined Critical Path from the Data Date to the last activity in the schedule, using the Longest Path method. This would reflect logic errors in the project schedule.

h) Failure to attach the schedule Narrative and required appendices.

i) Failure to correct any “Out-Of-Sequence” activities that affect the critical path.

If any of these deficiencies are found, the Design-Builder’s submission shall be considered deficient, and the Department’s Project Manager will notify the Design-Builder immediately by return E-mail of the rejection of the schedule submittal.

3.3.5.2 **Schedule Analysis Method.**

Events, actions, and progress that cause delays or gains to the Progress Schedule will be analyzed solely by the "Contemporaneous Period Analysis" method.

3.3.5.3 **Project Progress Meetings**

One topic of the regular weekly progress meetings held by the Project Manager and attended by the Design-Builder shall be a review of the Weekly Progress Schedule Status Reports. The Design-Builder shall be represented by their design, construction and Project Scheduler personnel. The Design-Builder shall review and discuss the current Weekly Progress Schedule Status Reports at the progress meetings.

a) The review of the Status Reports serves as the forum to discuss project progress and delays, suggested remedies, necessary Progress Schedule revisions, coordination requirements, change orders, potential Design-Builder time extension requests, and other relevant issues. If contract work is falling behind the Progress Schedule, the responsible party (i.e.- Design-Builder or Department) shall be ready to discuss what measures it will take in the next thirty (30) days to put the work back on schedule so as to meet the Project Completion Date specified in the Contract.

b) Items of discussion will include, but are not limited to, project progress; schedule progress; near term and long-term schedule issues, including RFIs, Shop Drawing submittals, permit work, utility relocations, mitigation work; project issues and risks; proposed solutions; and any relevant technical issues that are schedule related.

c) At the meeting the Project Scheduler shall compile an action item list that describes who is responsible for existing or pending issues and the date by which the issue needs to be resolved to avoid delays. The Design-Builder shall forward a copy of the action item list to the Project Manager within 2 business days following the meeting.

3.3.5.4 **Department Review and Acceptance of Progress Schedules**

The Department's Project Manager will review the Monthly Progress Schedule submissions and will prepare a written response (Progress Schedule Review Report) to the Design-Builder's submission within five (5) Work Days following receipt of the Design-Builder's complete schedule submission. The Department's Project Manager will either "accept" the schedule, "accept as noted", or "reject" the schedule for re-submittal by the Design-Builder.

If the Progress Schedule submission is not in compliance with contract requirements, the Department's Project Manager may reject the submittal and shall forward any comments and requests for schedule revisions to the Design-Builder. The Design-Builder shall address all comments in writing and/or make the requested revisions, and resubmit the revised schedule within three (3) Work days of the Department Project Manager's reply. If the Department's Project Manager determines the revised submission still does not meet the contract requirements, any further revisions required thereafter shall also be submitted for acceptance within (3) Work days of the request for revisions by the Department's Project Manager.

For schedules that are "accepted as noted" the Department's Project Manager shall forward any comments, or requests for revisions, to the Design-Builder. The Design-Builder shall address all comments in writing and/or make the requested revisions as part of the next scheduled Progress Schedule submission.

The Design-Builder shall make adjustments to the Progress Schedule in accordance with the comments from the Department's Project Manager and resubmit copies for review consistent with the requirements of this section.

The Department's Project Manager, by accepting the Progress Schedule, does not agree that the Progress Schedule is reasonable or that by following the Progress Schedule the Design-Builder can complete the Work in a timely manner. If, after a Progress Schedule has been accepted by the Department's Project Manager, either the Design-Builder or the Department's Project Manager discover that any aspect of the Schedule is in error, or something significant has been omitted, the Design-Builder shall correct the Progress Schedule in the next Progress Schedule submission and describe this revision in the Narrative report.

Acceptance of Progress Schedules by the Department's Project Manager shall not be construed to imply approval of any particular construction methods or sequence of construction or to relieve the Design-Builder from its responsibility to provide sufficient materials, equipment and labor to guarantee the completion of the Contract in accordance with the Contract requirement.

Acceptance of the Progress Schedule by the Project Manager does not attest to the validity of assumptions, activities, relationships, sequences, resource allocations, or any other aspect of the progress schedule. Within the contractual constraints, the Design-Builder is solely responsible for the planning and execution of the work.

Acceptance of the Progress Schedule by the Department's Project Manager shall not be construed to modify or amend the Contract Agreement or the date of Project Completion

therein. Completion dates can only be modified or amended by standard contractual means, through an official HC-250b Request For Extension of Completion Date.

If any resources are included in the Progress Schedule, it is not intended that the Department's Project Manager, by accepting the schedule should use the Design-Builder's resource data for anything other than determining the reasonableness of achieving the Design-Builder's production rates.

Once the Progress Schedule has been accepted, the Design-Builder shall not deviate from it without first notifying the Department's Project Manager in writing.

Upon receipt from the Design-Builder of the corrected schedule, a new review period by the Department's Project Manager of five (5) Work days will begin.

3.3.6 Changes to Progress Schedule due to Added/Deleted/Changed Work:

3.3.6.1 Changes to the Contract

The Design-Builder shall comply with the Notice and Recordkeeping provisions of §104-06, Notices and Recordkeeping, and notify the Department's Project Manager in writing if there is any effect of such change to the schedule. In the event there is a change to the Contract, the appropriate changes to the progress schedule shall be made, as necessary, to incorporate the anticipated added/deleted/changed work.

The reasons for these revisions must be succinct, comprehensive, and factual to merit consideration. Change to the contract includes, but is not limited to, Extra Work, Agreed Prices, Change Orders, Suspensions of Work Directed by the Department's Project Manager, Changed Condition, and Value Engineering Change Proposals. Added, deleted and/or extra work associated with Change Orders shall be reflected in the next Monthly Progress Schedule Submission in anticipation of and prior to the date in which the work physically takes place without regard to the dates when the actual Change Order was approved. The effect of the change to the Contract on the projects Critical Path shall be stated. Extra work or additional work that does not affect the controlling operation on the critical path will not be considered as the basis for a time extension. All schedule activities effected by added, deleted or changed work that is included in a signed Change Order, Field Change Order, or Authorization of Extra Work (with the exception of minor quantity changes that do not impact contract milestones), or work activities performed by the Design-Builder at risk in anticipation of such Department approval, shall be assigned the appropriate Activity Code (Added/Changed Work) and Code Value (sequentially numbered) to denote which "Changed Contract Work" order number correlates to those activities of work.

3.3.6.2 Time Impact Analysis

For each request of an adjustment of Contract time due to an anticipated change to future work in the Progress Schedule, when the Design-Builder or Department's Project Manager consider that an anticipated or approved change to the Contract may impact the critical path and Contract progress by more than a calendar month, the Design-Builder shall submit a Time Impact Analysis (TIA). The TIA shall be submitted as part of any Order on Contract (Change Order) and/or VECP if the critical path changes by more than a calendar month.

The TIA shall be based on a revised Progress Schedule and shall be submitted as an electronic file (using Microsoft Word for the narrative) containing:

a) The TIA shall illustrate the impacts of each change or delay on the current scheduled completion date or internal milestone, as appropriate.

b) The analysis shall use the accepted Monthly Progress Schedule that has a data date closest to and prior to the event as the “Current Baseline”, this shall then be compared against the “What-if Project Plan Baseline” for the purpose of the TIA.

c) If the Department’s Project Manager determines that the accepted schedule used does not appropriately represent the conditions prior to the event, the accepted schedule shall be updated to the day before the event being analyzed.

d) The TIA shall include an impacted schedule (“What-if Project Plan Baseline”) developed from incorporating the actual or anticipated event into the accepted schedule by adding or deleting activities, or by changing durations or logic of existing activities.

e) If the impact schedule shows that incorporating the event negatively modifies the critical path and scheduled completion date of the accepted schedule, and the Project Manager accepts the impacted schedule, the difference between scheduled completion dates of the two schedules shall be equal to the proposed adjustment of contract time.

f) The Department’s Project Manager may construct and utilize an appropriate project schedule or use another recognized method to determine adjustments in contract time until the Design-Builder provides the TIA.

g) The Design-Builder shall submit a TIA within fifteen (15) Work Days of receiving a written request for a TIA from the Department’s Project Manager.

h) The Design-Builder shall allow the Project Manager ten (10) Work Days after receipt to accept or reject the submitted TIA. All accepted TIA schedule changes shall be included in the next Monthly Progress Schedule submission.

i) If a TIA submitted by the Design-Builder is rejected by the Department’s Project Manager, the Design-Builder shall meet with the Project Manager to discuss and resolve issues related to the TIA. If agreement is not reached, the Design-Builder shall give notice in conformance with §104-06, Notices and Recordkeeping, and submit in accordance within the provisions in §105-14, Required Content of Dispute Submission.

j) The Design-Builder shall only show actual as-built work, not unapproved changes related to the TIA, in subsequent Monthly Progress Schedule submissions. If agreement is reached at a later date, approved TIA schedule changes shall be included in the next Monthly Progress Schedule submission.

k) Request for a contract time extension will not be processed until the receipt and approval of a Time Impact Analysis.

3.3.7 Failure to Submit Progress Schedules and/or Recovery Schedules

If the Design-Builder fails to comply with the provisions of this Special Provision or continues to submit deficient schedules, the Department's Project Manager may suspend payment for any and all Contract Work.

1) If the Design-Builder's Progress Schedule submission is rejected due to any deficiency noted in paragraph 5.3.5.1(a) through (i), it shall be considered an incomplete submission and therefore substantially deficient.
2) If the Design-Builder's revised Progress Schedule submission does not address the written comments provided by the Department's Project Manager, and does not include a written explanation with a reasonable rationale for not addressing those comments, the submission shall be considered deficient.

3.3.8 Recovery Schedule

1) If the latest completion time for any work on the current Progress Schedule results in an activity being delayed ten percent or more of the time beyond the required Contract duration or any specified Milestone duration, as adjusted if appropriate, the Project Manager may require the Design-Builder to submit a Recovery Schedule and written description of the plan to recover all lost time and maintain the required Completion Date or specified Interim Milestone Date(s).
2) With the Recovery Schedule the Design-Builder shall include revised calendars, activity Production Rates, and/or revised activity logic along with a narrative that identifies how time will be recovered.

   The submission may be supplemented with a request for a Contract Time Extension. The Design-Builder shall provide a reasonable plan for accomplishing the work of the contract within the current completion date, or to the requested contract extension date. The Department's Project Manager will use the Recovery Schedule to evaluate time extensions, with or without charges.

3.3.9 Float

During the course of contract execution, Total Float generated due to the efficiencies of either party (State or Design-Builder) will be considered project Float that is not for the sole use of the party generating the float; rather it is a shared commodity to be reasonably used by either party. Any party assigned activity responsibility within the schedule has the full use of the project Float until it is depleted.

3.4 PAYMENT

The cost of preparing and updating the CPM schedule and meeting all other requirements of this Special Provision shall be included the Project costs.

SP-4. MATERIALS APPROVAL PROCEDURES FOR DESIGN-BUILD PROJECTS

All Materials used in the Design-Build work shall meet the quality requirements described in the Contract Documents. The use of Standard Specifications and Approved List (AL) materials are expected for commonly available products for incorporation into the Work. Additionally, existing

NYSDOT Special Specifications that include material requirements may also be used in the Work.

If the Design-Builder deviates from Contract Documents, Standard Specifications, or existing Special Specifications, the Design-Builder shall develop Design Plans, Project Specifications and Work Plans that define materials and procedures to complete the Work. The Design-Builder shall progress acceptance of materials and sources, proving durability through tests and evaluations as appropriate, prior to use in the Work. The Design-Builder shall document the sources of supply (NOTE: Must be in compliance with all “Buy America” regulations) and kinds of materials that will be used in the work as soon as they are known.

As part of the Design requirements of Part 3, Section 5, the Department will review and accept materials proposed for use as follows:

Products that are not presently on the AL but claim to meet specification requirements shall be evaluated by the Department prior to use. The Department will perform the necessary testing according to the existing material requirements for the products as defined in Section 700 of the NYSDOT Standard Specifications or any Special Specification requirements. A request for inclusion on the AL shall be made by the manufacturer / supplier. The required submittal information for AL consideration can be found at:

https://www.dot.ny.gov/divisions/engineering/technical-services/materials-bureau/approved-list-submission

When products are proposed for which NYSDOT does not have Standard or Special Specifications, or where proven materials may be used in non-traditional applications, materials evaluations will be progressed based on review of technical details, performance histories, and/or physical testing. The Design-Builder will provide this information to prove the expected performance and durability of these unique materials before they can be used in the Work. Submissions shall include:

General Information

- Product Name
- General Description
- Purpose/Justification
- Manufacturer
- Supplier

Technical Details (Specifications)

- Materials (Include composition and MSDS sheets)
- Construction Details
- Testing, Inspection and Acceptance (identify standards like AASHTO, AREMA or ASTM)
- Maintenance requirements and frequencies that may apply for the intended application

Performance History

- Test Results (including test methods for durability, strength, appearance, etc)
- Previous Uses (describing who, where, when, documented performance)

The evaluation of materials will depend on the uniqueness of the proposed materials, critical nature of the application, and detailed information provided. Evaluations will consist of the following:

- Materials deemed less critical will likely be accepted based on literature review only. Use of these materials can begin at any time.
- Materials deemed more critical will require both literature review and physical testing by the Department. Physical testing will commence only after literature review determines the material has a likely chance of meeting all performance criteria defined in the Design-Builder's Special Specifications. Conditional acceptance will be made upon completion of the literature review that will allow use of these materials prior to completion of physical testing. However, failure of materials during physical testing will result in a NCR for any materials incorporated into the Work. Rectification of the generated NCR shall be at the sole judgement of the Department.

The Design-Builder shall consider the uniqueness of the proposed materials, critical nature of the application, and detail of information provided for an evaluation. Additionally, The Design-Builder shall consider the duration of the evaluation required to reasonably progress all sampling, transportation, preparation, testing, and evaluation of results as defined in the material requirements for an item and may NOT use any part of the evaluation process as a basis for claim and/or delay. The Department will, when possible, perform AASHTO, AREMA and/or ASTM tests of the materials for acceptance purposes. When the Department does not have the capabilities to evaluate materials, testing labs may be hired for testing as needed at the Design-Builder's expense.

Use of any materials prior to acceptance by the Department shall be at the Design-Builder's risk. After acceptance, materials shall conform to specification requirements and subject to all QC/QA actions and Department verification.

Once in Construction, the Design-Builder is responsible for QC of all materials while the Department is responsible to verify the quality of all materials through the timely submission of Certified Test Reports. The Department will progress sampling and testing for verification of materials according to the established Quality Control Plan developed for the project.

SP-5. SPECIAL PROVISIONS FOR TESTING BRIDGE BEARINGS

Throughout this Special Provision, references to the Standard Specification shall mean the edition of the NYSDOT Standard Specifications, Construction and Materials, English Units, Office of Engineering, in effect on the Proposal Due Date.

Inspection, sampling, and testing shall be in accordance with the procedures noted for each bearing type below with the Design-Builder assuming the role of the Department. Inspection shall be done at the place of manufacture after all bearings in a lot are completely fabricated.

Sampling shall be done randomly from all bearings in each lot. Inspection, sampling, and testing shall be completed by inspectors independent of the manufacturer. In addition, the Department will inspect and sample for verification purposes after the Design-Builder completes their inspection and sampling. Bearings may be shipped to the project site after inspection and sampling is completed by the Design-Builder and the Department.

5.1 DISC-DESIGN STRUCTURAL BRIDGE BEARINGS

The Design-Builder shall perform the inspection, sampling and testing of disc-design structural bridge bearings, on a lot by lot basis, in accordance with the procedures outlined in Materials Procedure 84-2 (Quality Assurance Inspection for 716.06.01, Disc-Design Structural Bridge Bearings 716.07.01 Pot-Design Structural Bridge Bearings) [to be referred to as MP84-2]. The requirements for these bearings are listed in the Standard Specifications.

5.1.1 Polyether Urethane Structural Element

The physical properties of the polyether urethane shall conform to the requirements ASTM D2240, ASTM D412 and ASTM D395 as listed in Section 700 of the Standard Specifications.

5.1.2 Steel Plates

Conform to the requirements of the steel designated on the Contract Plans and applicable provisions of the NYS Steel Construction Manual (refer to Section 700 of the Standard Specifications).

5.1.3 Stainless Steel

Stainless steel shall conform to the requirements of ASTM A167 or ASTM A240, Type 304. Refer to Section 700 of the Standard Specifications.

5.1.4 Polytetrafluoroethylene (PTFE) Sheet and Strip

Finished PTFE sheet and strip shall conform to the physical requirements of ASTM D638M and ASTM D792 as listed in Section 700 of the Standard Specifications.

5.1.5 Welding Procedure

All welding shall conform to, and all welders shall be qualified in accordance with the requirements of the NYS Steel Construction Manual.

5.1.6 Compression Strain

Requirements and test conditions are outlined in Section 700 of the Standard Specifications.

5.1.7 Sliding Coefficient of Friction

For all guided and non-guided expansion type disc-design bearings, the bearing manufacturer will test one production bearing per lot (see Section 700 of the Standard Specifications).

5.1.8 Rotation Test

The bearing manufacturer will test one production bearing per lot. Evaluation criteria are listed in Section 700 of the Standard Specifications.

5.2 POT-DESIGN STRUCTURAL BRIDGE BEARINGS

The Design-Builder shall perform the inspection, sampling and testing of pot-design structural bridge bearings, on a lot by lot basis, in accordance with the procedures outlined in Materials Procedure 84-2 (Quality Assurance Inspection Procedure for 716.06.01 Disc-Design Structural Bridge Bearings 716.07.01 Pot-Design Structural Bridge Bearings) [to be referred to as MP84-2]. The requirements for these bearings are listed in the Standard Specifications.

5.2.1 Elastomeric Rotational Element

The tensile properties of the neoprene and natural rubber elements shall conform to ASTM D412, ASTM D573 and ASTM D2240. These neoprene and natural rubber elements shall also conform to ASTM and AASHTO requirements as listed in Section 700 of the Standard Specifications [ASTM D2000, Line Call Out M2BC517A14B34, ASTM D2000, Line Call Out M4AA517A13B33, AASHTO Standard Specifications for Bridge Section 2.25.2, Materials 50 Durometer Hardness].

5.2.2 Steel

All steel will conform to the requirements of the steel designated on the Contract Plans and applicable provisions of the NYS Steel Construction Manual (refer to section 700 of the Standard Specifications).

5.2.3 Stainless Steel

Stainless steel shall conform to the requirements of ASTM A167 or ASTM A240, Type 304. Refer to Section 700 of the Standard Specifications.

5.2.4 Polytetrafluoroethylene (PTFE) Sheet and Strip

Finished PTFE sheet and strip shall conform to the physical requirements of ASTM D638M and D792 as listed in Section 700 of the Standard Specifications).

5.2.5 Welding Procedure

All welding shall conform to, and all welders shall be qualified in accordance with the requirements of the NYS Construction Manual.

5.2.6 Sliding Coefficient of Friction

For all guided and non-guided expansion type pot-design bearings, the bearing manufacturer will test one production bearing per lot (see Section 700 of the Standard Specifications).

5.2.7 Rotation Test

The bearing manufacturer will test one production bearing per lot. Evaluation criteria are listed in the Standard Specifications.

5.3 STEEL LAMINATED ELASTOMERIC BRIDGE BEARINGS AND ELASTOMERIC BRIDGE BEARINGS WITH EXTERNAL LOAD PLATES

The Design-Builder shall perform the inspection, sampling and testing of elastomeric bridge bearings, on a lot by lot basis, in accordance with the procedures outlined in Materials Method

No.: NY 23 M (to be referred to as MM23). The requirements for these bearings are listed in the Standard Specifications.

5.3.1 Elastomeric Material

The physical properties of the cured elastomeric compound shall meet the requirements of ASTM D412 (see Section 700 of the Standard Specifications).

Manufacturer must certify that the elastomeric compound passes Grade 3 Low-Temperature Brittleness as determined by ASTM D746 – Brittleness Temperature of Plastics and Elastomers by Impact, Procedure B.

5.3.2 Internal Steel Plates (shims)

Conform to the requirements of ASTM A36M, ASTM 1008/A 1008/M or ASTM 1011/A 1011/M (Grade 33, 36 and 40).

5.3.3 External Load Bearing Plates and Steel Backing Plates

External load plates shall conform to the requirements of ASTM A36M and to the requirements of the Steel Construction Manual (SCM).

5.3.4 Welding Procedure

The bearing manufacturer shall submit a Welding Procedure to the Deputy Chief Engineer Structures (DCES) for each welding process to be used in the manufacture of the bearings. No welding shall be performed until the manufacturer receives an approved Welding Procedure.

5.3.5 Bearing Tolerances

The finished elastomeric bearings shall conform to the design dimensions, with the tolerances listed in Section 700 of the Standard Specifications.

5.3.6 Compression / Deflection

Test conditions are outlined in the Standard Specifications.

5.3.7 Adhesion

Visual inspection as outlined in the Standard Specifications.

SP-6. PAYMENT REDUCTIONS, LIQUIDATED DAMAGES AND EARLY COMPLETION BONUS

Time is an essential element of the Contract, and it is important that the Work be pursued vigorously to completion. The public is subject to detriment and inconvenience when full use of infrastructure cannot be maintained during the construction of the Project. Therefore, payment reductions and/or liquidated damages will be assessed against the Design-Builder under the circumstances specified below. Conversely, an early completion bonus will be paid to the Design-Builder for completing the Project before the Project Completion Date in accordance with the circumstances specified below.

6.1 PAYMENT REDUCTIONS AND LIQUIDATED DAMAGES

6.1.1 Project Completion

The Design-Builder shall pay liquidated damages, as described in DB § 108-03 – Liquidated Damages, and as shown on Form SCD, Table SCD-1, for failure to achieve Project Completion by the Project Completion Date. The Project Completion Date will be established based on the proposed duration provided in Table SCD-1 on Form SCD and described in Part 2 - DB 103-06 Sample Form of Contract Agreement, Article 4.2 Project Completion Date.

6.1.2 Interim Completion

The Interim Completion Milestone Date will be the date determined by adding the number of calendar days proposed by the Design-Builder on Form SCD (the Duration), to the date of the Notice to Proceed as issued by the Department. The Interim Completion Milestone Date may not be changed without written approval by the Department's Project Manager.

The Design-Builder shall be subject to liquidated damages for failure to meet the Interim Completion Milestone Date in accordance with Form SCD for each calendar day in excess of the total number of calendar days provided in the ~~t~~Table~~s~~ SCD-2a on Form SCD.

6.1.3 Impacts to Traffic

The Design-Builder shall be subject to ~~payment reductions and~~ liquidated damages for each calendar day that traffic is impacted, at each site, in excess of the ~~number of~~ Traffic Impact Days indicated in Table SCD-2b~~3~~ on Form SCD~~, and/or for each day that traffic is impacted in excess of the Traffic Impact Duration provided in Table SCD-3 on Form SCD. If both the number of Traffic Impact Days and the Traffic Impact Duration are exceeded at any given site, Liquidated Damages will be assessed twice each day both are exceeded~~.

6.2 EARLY COMPLETION BONUS

Section not used.~~An Early Completion Bonus will be paid to the Design-Builder in the amount of $X,X00.00 per day (XX days maximum) for the number of days that all traffic is permanently transferred to its final configuration on ROADWAY(S), without any further lane restrictions on this/these structure(s), earlier than the Interim Completion Milestone Date. The Interim Completion Milestone Date will be established based on the proposed duration provided by the successful Proposer in Table SCD-2 on Form SCD and described in DB 103-06, Article 4.1 – Interim Completion Milestone Date.~~

~~In addition, an Early Completion Bonus will be paid to the Design-Builder in the amount of $X,X00.00 per day (XX days maximum) for the number of days Project Completion is achieved earlier than the Project Completion Date. The Project Completion Date will be established based on the proposed duration provided by the successful Proposer in Table SCD-1 on Form SCD and described in DB 103-06, Article 4.2 – Project Completion Date.~~

~~Time is an essential element of the Contract, and it is important that the Work be pursued vigorously to completion. The public is subject to detriment and inconvenience when full use of infrastructure cannot be maintained during the construction of the Project. Therefore, payment reductions and/or liquidated damages will be assessed against the Design-Builder under the circumstances specified below. Conversely, an early completion bonus will be paid to the~~

~~Design-Builder for completing the Project before the Project Completion Date in accordance with the circumstances specified below.~~

SP-7. CONSTRUCTION INSPECTION REQUIREMENTS

These guidelines shall be used to develop the Design-Builder's Quality Control (QC) Plan. The intent of notes #1 and #2 below are to establish a minimum requirement for assigning the number of CI staff on the project. It is not intended to serve as a limit to the maximum number of CI staff that may be necessary or required based on the Design Builder's schedule, number of concurrent activities, or level of experience of the individual Construction Inspector(s) or other factors not described herein.

Construction Inspection QC Operations:

1. **Primary Shift**: The DB is required to furnish **no less than** 8 Full Time Construction Inspectors, FTCI, (not including the Resident Engineer or the Office Engineer). Upon commencement of the project (NTP), it is understood that the FTCIs will be logically increased to the inspection staff incrementally consistent with the project's schedule. The DB shall ensure adequate inspection staff is present on site, no less than two weeks prior to the need for the additional FTCI staff persons to allow for advance study and familiarization with the project. In any case, the 8 FTCI staff shall be on site for deployment no later than 180 calendar days from NTP. Subsequent to achieving the project substantial completion, as defined by the contract, the DB firm may similarly ramp down the inspection staff to align with the work remaining to complete the project and consistent with the project schedule, with the written approval of the Department's Project Manager. During project operations, the number of FTCI should be consistent with the Design Builder's planned operations and Table "Construction Inspection Requirements".
2. **Secondary or Multiple Shift:** In the event the DB elects to perform work in multiple shifts, then additional Construction Inspection staff must be added to the CI staffing requirement of note #1 above. However, at no time can there be less than 4 Full Time Construction Inspectors provided during any secondary or multiple shift time period.
3. **Additional Staffing Requirements:** The Design Builder is expected to balance the inspection needs with its schedule of simultaneous operations paying particular attention to the Continuous Inspection demands vs. the number of CI staff available. The accompanying table utilizes generic titles from the Standard Specification Table of Contents. Project specific situations may alter the requirements of an activity.
4. **Testing Requirements:** Material Testing Requirements are not incorporated into these guidelines. Refer to Part 3, Section 6, "Construction Quality Control and Quality Assurance".
5. **Witness and Hold Point** requirements represent activities that require an inspector to determine conformance based on an evaluation performed after specific milestone is accomplished. These witness and hold thresholds may be determined based on the specific progression of each activity hold points must be agreed upon between the CQCE and the CQAE prior to commencing the work.
6. **Interval Definitions:**

1. Intermittent (1) - Inspection required is based on the item(s) of work and Contractor's means and methods
2. Intermittent (2)-Inspection is required, at a minimum, on a daily basis
3. Intermittent (3)-Inspection is required no less than twice per inspection shift.
4. Continuous – Inspection is required continuously throughout the duration of the operation.

7. **Temporary Work:**

   Prior to the commencement of temporary work, the CQCE and the CQAE in conjunction with the Resident Engineer and Department's PM shall discuss and reach concurrence on the inspection QC and QA requirements for the project and features defined to be of a temporary nature.

8. **~~Force Account~~Extra Work:**

   There will be no consideration of additional payment for CI staff related to Force Account Work unless the minimum number of FTCI staff, as listed in Note 1 of this Special Provision, is exceeded.

CONSTRUCTION INSPECTION REQUIREMENTS			
SPECIFICATION SECTION	**INSPECTION INTERVAL / FREQUENCY**	**WITNESS & HOLD**	**COMMENTS**
SECTION 201 - CLEARING AND GRUBBING	Intermittent (1)		
SECTION 202 - DEMOLITION OF BUILDINGS AND STRUCTURES	Continuous		
SECTION 203 - EXCAVATION WITH BLASTING	Intermittent (1)	yes	continuous inspection for blast operations, intermittent for pre and post blast operations
SECTION 203 - EXCAVATION W/O BLASTING	Intermittent (3)		
SECTION 203 - EMBANKMENT	Intermittent (1)	Yes	completion of each lift
SECTION 204 - FLOWABLE FILL	Intermittent (1)		
SECTION 205 - CONTAMINATED SOIL	Continuous		
SECTION 206 - STRUCTURE EXCAVATION	Intermittent (1)	Yes	verify Line, grade accuracy
SECTION 206 - TRENCH AND CULVERT EXCAVATION	Continuous		*if backfill is included
SECTION 207 - GEOSYNTHETICS	Intermittent (1)		
SECTION 208 - STORMWATER MANAGEMENT FACILITIES	Intermittent (1)		
SECTION 209 - SOIL EROSION AND SEDIMENT CONTROL	Intermittent (1)		Plus Post storm for repairs and modifications
SECTION 210 - REMOVAL AND DISPOSAL OF ASBESTOS-CONTAINING MATERIAL (BUILDINGS, BRIDGES AND HIGHWAYS)	Intermittent (1)		
SECTION 211 - INTERNALLY STABILIZED CUT STRUCTURES	Continuous		
SECTION 212 - ROCK SLOPE REINFORCEMENT AND CATCHMENT SYSTEMS	Intermittent (1)		
SECTION 304 - SUBBASE COURSE	Intermittent (1)	Yes	proof rolling required, verify subgrade surface: line and grade quality
SECTION 307 - HYDRATED LIME STABILIZED SUBGRADE	Intermittent (1)		as needed
SECTION 402 - HOT MIX ASPHALT (HMA) PAVEMENTS	Continuous		

CONSTRUCTION INSPECTION REQUIREMENTS			
SPECIFICATION SECTION	**INSPECTION INTERVAL / FREQUENCY**	**WITNESS & HOLD**	**COMMENTS**
SECTION 405 - COLD MIX BITUMINOUS PAVEMENT (OPEN GRADED)	Continuous		
SECTION 407 - TACK COAT	Continuous		
SECTION 410 - CHIP SEAL	Continuous		
SECTION 412 - CRACK SEALING ASPHALT PAVEMENTS	Intermittent (1)	Yes	upon addition of new material to applicator
SECTION 413 - MICRO-SURFACING	Continuous		
SECTION 417 – HOT MIX ASPHALT USING RECYCLING TREATMENTS	Continuous		
SECTION 418 – ASPHALT PAVEMENT JOINT ADHESIVE	Intermittent (1)		
SECTION 419 - FOG SEAL	Intermittent (1)		
SECTION 420 - POROUS ASPHALT PAVEMENT	Continuous		
SECTION 490 - COLD MILLING	Intermittent (1)	Yes	verify grade and quality of surface
SECTION 502 - PORTLAND CEMENT CONCRETE PAVEMENT	Continuous		
SECTION 503 - PORTLAND CEMENT CONCRETE FOUNDATION FOR PAVEMENT	Intermittent (1)		
SECTION 551 - PILES AND PILE DRIVING EQUIPMENT	Continuous		
SECTION 552 - EXTERNALLY STABILIZED CUT STRUCTURES (SHEETING)	Continuous		
SECTION 553 - COFFERDAMS AND WATERWAY DIVERSION STRUCTURES	Continuous		
SECTION 554 - FILL TYPE RETAINING WALLS	Continuous		
SECTION 555 - STRUCTURAL CONCRETE	Continuous		
SECTION 556 - REINFORCING STEEL FOR CONCRETE STRUCTURES	Intermittent (2)	Yes	final inspection of rebar and forms prior to concrete placement
SECTION 557 - SUPERSTRUCTURE SLABS, SIDEWALKS ON BRIDGES, AND STRUCTURAL APPROACH SLABS	Continuous	Yes	daily Inspection and approval of all elements prior to concrete placement

CONSTRUCTION INSPECTION REQUIREMENTS			
SPECIFICATION SECTION	**INSPECTION INTERVAL / FREQUENCY**	**WITNESS & HOLD**	**COMMENTS**
SECTION 558 - LONGITUDINAL SAWCUT GROOVING OF STRUCTURAL SLAB SURFACE	Intermittent (1)	Yes	After first pass to confirm depth and spacing
SECTION 559 - PROTECTIVE COATINGS AND GRAFFITI REMOVAL	Intermittent (3)		
SECTION 560 - MASONRY	Intermittent (1)		
SECTION 562 - REINFORCED CONCRETE THREE-SIDED STRUCTURES	Continuous		
SECTION 563 - PRESTRESSED CONCRETE UNITS (STRUCTURAL)	Continuous		
SECTION 564 - STRUCTURAL STEEL	Continuous		
SECTION 565 - BRIDGE BEARINGS	Intermittent (1)	Yes	final survey/acceptance prior to structural steel placement
SECTION 566 - MODULAR EXPANSION JOINT SYSTEMS	Intermittent (1)	Yes	When joint is set
SECTION 567 - BRIDGE JOINT SYSTEMS	Intermittent (1)	Yes	When joint is set
SECTION 568 - BRIDGE RAILING	Intermittent (1)		
SECTION 569 - PERMANENT CONCRETE TRAFFIC BARRIER FOR STRUCTURES	Continuous		
SECTION 570 - PAINT REMOVAL OPERATIONS	Intermittent (3)	Yes	verification of paint removal
SECTION 571 - DISPOSAL OF PAINT REMOVAL WASTE	Intermittent (2)	Yes	Whether carrier is approved prior to loading
SECTION 573 - STRUCTURAL STEEL PAINTING: FIELD APPLIED - TOTAL REMOVAL	Intermittent (1)	Yes	verification of paint removal and inspection of each paint coat prior to next paint coat
SECTION 574 - STRUCTURAL STEEL PAINTING: OVERCOATING AND LOCALIZED	Intermittent (1)	Yes	
SECTION 576 - BRIDGE DRAINAGE SYSTEM	Intermittent (1)		verify final install quality
SECTION 578 - BONDED CONCRETE OVERLAY FOR STRUCTURAL SLABS	Continuous		

CONSTRUCTION INSPECTION REQUIREMENTS			
SPECIFICATION SECTION	**INSPECTION INTERVAL / FREQUENCY**	**WITNESS & HOLD**	**COMMENTS**
SECTION 579 - STRUCTURAL SLAB RECONSTRUCTION PREPARATION	Continuous		
SECTION 580 - REMOVAL OF STRUCTURAL CONCRETE	Intermittent (1)		
SECTION 581 - REMOVAL OF BRIDGE OVERLAYS	Intermittent (1)		
SECTION 582 - REMOVAL AND REPLACEMENT OF STRUCTURAL CONCRETE	Intermittent (1)	Yes	When competent concrete has been reached; prior to forming
SECTION 583 - SHOTCRETE	Continuous		
SECTION 584 - SPECIALIZED OVERLAYS FOR STRUCTURAL SLABS	Continuous		
SECTION 585 - STRUCTURAL LIFTING OPERATIONS	Continuous		
SECTION 586 - MISCELLANEOUS STRUCTURAL RECONSTRUCTION	Continuous		
SECTION 587 - BRIDGE RAILING RECONSTRUCTION	Intermittent (1)		
SECTION 588 - BRIDGE JOINT REHABILITATION	Continuous		
SECTION 589 - REMOVAL OF STRUCTURAL STEEL	Continuous		
SECTION 590 - ADJUSTMENT OF BRIDGE APPURTENANCES	Intermittent (1)		
SECTION 595 - WATERPROOFING SYSTEMS FOR STRUCTURES	Continuous		
SECTION 596 - OPEN STEEL FLOOR	Intermittent (1)		
SECTION 601 - ARCHITECTURAL PAVEMENTS AND TREATMENTS	Intermittent (1)		
SECTION 602 - REHABILITATION OF CULVERT AND STORM DRAIN PIPE	Continuous		
SECTION 603 - CULVERTS AND STORM DRAINS	Continuous		
SECTION 604 - DRAINAGE STRUCTURES	Continuous		
SECTION 605 - UNDERDRAINS	Intermittent (1)		
SECTION 606 - GUIDE RAILING AND MEDIAN BARRIER	Intermittent (1)		

CONSTRUCTION INSPECTION REQUIREMENTS			
SPECIFICATION SECTION	**INSPECTION INTERVAL / FREQUENCY**	**WITNESS & HOLD**	**COMMENTS**
SECTION 606 - CIP CONCRETE BARRIER	Continuous		
SECTION 607 - FENCES	Intermittent (1)		
SECTION 608 - SIDEWALKS, DRIVEWAYS, BICYCLE PATHS, AND VEGETATION CONTROL STRIPS	Continuous		
SECTION 609 - CURB AND CURB & GUTTER	Continuous		
SECTION 610 - GROUND VEGETATION - PREPARATION, ESTABLISHMENT AND MANAGEMENT	Intermittent (1)		
SECTION 611 - PLANTING, TRANSPLANTING AND POST PLANTING CARE	Intermittent (1)		
SECTION 614 - PRUNING, IMPROVING AND REMOVING EXISTING VEGETATION	Intermittent (1)		
SECTION 617 - INVASIVE SPECIES MANAGEMENT	Intermittent (1)		
SECTION 619 - WORK ZONE TRAFFIC CONTROL	Continuous		Dedicated WZTC CI shall be provided for both day and night shifts. This CI shall have no additional responsibilities other than WZTC.
SECTION 620 - BANK AND CHANNEL PROTECTION	Intermittent (1)		
SECTION 621 - CLEANING CULVERTS, DRAINAGE STRUCTURES AND EXISTING ROADSIDE SECTIONS	Intermittent (1)	yes	verification of cleaning
SECTION 622 - BUILDINGS AND MISCELLANEOUS STRUCTURES	Intermittent (1)		
SECTION 623 - SCREENED GRAVEL, CRUSHED GRAVEL, CRUSHED STONE, CRUSHED SLAG	Intermittent (1)		
SECTION 624 - PAVED GUTTERS	Continuous		
SECTION 625 - SURVEY OPERATIONS	Intermittent (2)		

CONSTRUCTION INSPECTION REQUIREMENTS			
SPECIFICATION SECTION	**INSPECTION INTERVAL / FREQUENCY**	**WITNESS & HOLD**	**COMMENTS**
SECTION 629 - PETROLEUM STORAGE TANK CLOSURE	Continuous		
SECTION 630 - BARRICADES	Intermittent (2)		
SECTION 633 - CONDITIONING EXISTING PAVEMENT PRIOR TO HOT MIX ASPHALT (HMA) OVERLAY	Continuous		
SECTION 635 - CLEANING AND PREPARATION OF PAVEMENT SURFACES FOR PAVEMENT MARKINGS	Continuous		
SECTION 638 - WHITE SYNTHETIC RESIN BINDER CONCRETE	Continuous		
SECTION 640 - REFLECTORIZED PAVEMENT MARKING PAINTS	Continuous		
SECTION 641 - BRIDGE WASHING	Intermittent (1)	Yes	Hold when certain elements have been cleaned
SECTION 642 - ROADSIDE MAINTENANCE	Intermittent (3)		
SECTION 643 - NOISE BARRIERS	Continuous		
SECTION 644 - OVERHEAD SIGN STRUCTURES	Continuous		
SECTION 645 - SIGNS	Intermittent (1)		
SECTION 646 - DELINEATORS, REFERENCE MARKERS AND SNOWPLOWING MARKERS	Intermittent (1)		
SECTION 647 - REMOVING, STORING, AND RELOCATING SIGNS, SIGN PANEL ASSEMBLIES, SIGN SUPPORTS, AND FOUNDATIONS	Intermittent (1)		
SECTION 648 - SUBSURFACE EXPLORATIONS	Intermittent (2)		
SECTION 649 - AUDIBLE ROADWAY DELINEATORS	Intermittent (1)		
SECTION 650 - TRENCHLESS INSTALLATION OF CASING	Continuous		
SECTION 654 - IMPACT ATTENUATORS - PERMANENT	Intermittent (1)		
SECTION 655 - FRAMES, GRATES AND COVERS	Intermittent (1)		

CONSTRUCTION INSPECTION REQUIREMENTS			
SPECIFICATION SECTION	**INSPECTION INTERVAL / FREQUENCY**	**WITNESS & HOLD**	**COMMENTS**
SECTION 656 - MISCELLANEOUS METALS	Intermittent (1)		
SECTION 657 - PAINTING GALVANIZED AND ALUMINUM SURFACES	Intermittent (1)		
SECTION 659 - TELECOMMUNICATION UTILITIES	Continuous		
SECTION 660 - UTILITIES	Continuous		
SECTION 661 - ELECTRIC UTILITIES	Continuous		
SECTION 662 - GAS, OIL & STEAM UTILITIES	Continuous		
SECTION 663 - WATER SUPPLY UTILITIES	Continuous		
SECTION 664 - SANITARY SEWER UTILITIES	Continuous		
SECTION 670 - HIGHWAY LIGHTING SYSTEM	Continuous		
SECTION 675 - RAILROAD TRACK AND APPURTENANCES	Continuous		
SECTION 680 - TRAFFIC SIGNALS	Intermittent (1)		
SECTION 683 - INTELLIGENT TRANSPORTATION SYSTEMS	Intermittent (1)		
SECTION 685 - EPOXY REFLECTORIZED PAVEMENT MARKINGS	Continuous		
SECTION 687 - THERMOPLASTIC REFLECTORIZED PAVEMENT MARKINGS	Continuous		
SECTION 688 - PREFORMED REFLECTORIZED PAVEMENT MARKINGS	Continuous		
1. Intermittent (1): inspection as needed based on the item/s of work and contractor's mean and methods			
2. Intermittent (2): inspection on a daily basis			
3. Intermittent (3): inspection is required no less than twice per inspection shift.			
4. Continuous: inspection is required continuously throughout the duration of the operation.			

SP-8. COST LOADED SCHEDULE

The Design-Builder shall provide a means to verify costs that the Design-Builder is entitled to under the contract terms, following the Work Payment Structure (WPS), through reports generated from the cost and resource loaded schedule that reflect the physical percentage of work that has been completed. The Design-Builder is required to enter the unit price for each activity in the schedule using the Expenses function in P6. The appropriate cost shall be assigned to each activity, enabling the schedule to be fully cost loaded. The Design-Builder shall enter the costs, units, and major quantities under “Expenses” in Primavera. Associated expenses shall correlate with the work payment structure utilizing the cost codes features and each activity name / description shall be assigned with one cost code which contains a single wok payment structure (WPS) in the schedule. This will enable a report to be generated from the regular Progress Schedule Updates that reflects the amount that the Design-Builder is requesting payment. The report shall be based on the physical percentage of work completed within the reporting period, and must comply with the cost percentages allowed for the WPS deliverables in the Design-Build contract.

SP-9. DB PERFORMANCE ENGINEERED CONCRETE MIXTURES

DB PERFORMANCE ENGINEERED CONCRETE MIXTURES

DESCRIPTION

Develop a Performance Engineered Concrete Mixture for applications to replace Standard Classes of concrete to meet specified performance criteria when desired. Consideration of any acceleration and impacts on shrinkage shall be considered when developing a mixture. Requirements herein do not supersede other contractual requirements for Mass Placement concrete.

MATERIALS

The provisions of §501 shall apply, except as modified herein.

1. Use materials meeting the requirements of 501-2.02

2. Design a concrete mixture proportioned according to the American Concrete Institute Manual of Concrete Practice, ACI 211.1, *Standard Practice for Selecting Proportions for Normal, Heavyweight, and Mass Concrete* and the provisions of AASHTO R101, *Developing Performance Engineered Concrete Pavement Mixtures*. Produce a homogeneous mixture using Approved List materials to achieve the performance requirements of Table 501. The Contractor shall develop mixtures with a well graded, optimized aggregate gradation to minimize the paste content while maintaining workability. Aggregate gradation shall meet the requirements of the Tarantula curve (or Shilstone method or 8-18 method) as defined by FHWA at https://www.fhwa.dot.gov/pavement/concrete/pubs/hif15019.pdf.

3. Designed concrete mixture to meet the following requirements:

- ***Aggregate Gradation***
    - **Concrete Sand** The Contractor shall use only sand meeting the requirements of §703-07, Concrete Sand or graded according to ASTM C-33 size designations to optimize aggregate gradation of the resulting concrete mixture.
    - **Coarse Aggregate** The Contractor shall use only crushed stone, crushed gravel, or crushed slag meeting the requirements of §703-02, Coarse Aggregates in either one or a combination of size designations as specified in Table 703-4, Sizes of Stone, Gravel, and Slag, or graded according to ASTM C-33 size designations to optimize aggregate gradation of the resulting concrete mixture. Gradations for coarse aggregates shall be done over a full nest of sieves as follows: 1 ½”, 1”, 3/4”, 1/2”, 3/8”, #4, #8, #16, #30, #50, #100 and #200.
    - The maximum aggregate size used in a concrete mixture shall be dependent on the size and shape of the concrete member and on the amount and distribution of reinforcing steel. The Contractor shall select the nominal maximum size of aggregate which does not exceed:
        i. three-quarters of the clear space between reinforcing bars and between the reinforcing bars and the forms; and
        ii. one-third the thickness of the placement; and
        iii. one-fifth the narrowest dimension between form sides

- ***Aggregate Friction.*** Sample and test aggregate for friction characteristics according to the procedures of Materials Method 28 "Friction Aggregate Control and Test Procedures."

- ***Aggregates and Cementitious Materials.*** Cement and aggregate combinations shall be selected to mitigate the potential for Alkali Silica Reactivity (ASR). Specifically, certain aggregates appear in the Approved List of Sources of Fine & Coarse Aggregates that have use limitations if combined with a high-alkali Portland cement. The Regional Materials Engineer may allow the use of these aggregates in combination with high-alkali cements provided that pozzolans are substituted for cement in the following way:

POZZOLAN SUBSTITUTIONS	
Application	**Substitute Cement by Mass With**
bridge decks, approach slabs, and sidewalks	20% to 25% Class F Fly Ash (711-10) or 20% to 25% GGBFS in combination with minimum 6% Microsilica
All other applications	Minimum 20% Class F Fly Ash (711-10) or Minimum 35% GGBFS

  Alternatively, the contractor may develop a mixture according to AASHTO R-80 (17), *Standard Practice for Determining Reactivity of Concrete Aggregates and Selecting Appropriate Measures for Preventing Deleterious Expansion in New Concrete Construction*, to determine preventive measures to minimize the risk of expansion when reactive aggregates are used in combination with high alkali cement. Use of this method or other means to mitigate ASR shall be with the approval of the Director, Materials Bureau.

- ***Mixture Performance Criteria.*** Proportion all ingredients to achieve the required performance criteria defined in Table 501, Performance Concrete Mixtures. The Contractor is responsible to assure the different materials selected for use in the PCC mixture are compatible with one another to provide a durable concrete meeting the performance requirements of this specification. The requirements for special properties covered in other pay items and/or the use of special materials shall be included in addition to the requirements of this specification. Mixture requirements for internal curing, mass placement, self-consolidating concrete (SCC), high early strength (HES) and other concrete mixtures shall be adhered to in conjunction with the performance criteria of this specification.

- ***Internal Curing.*** Mixtures for bridge decks, approach slabs, sidewalks and safety walks on decks, and concrete barrier on decks shall include the use of light weight fine aggregates for internal curing in accordance with the NYSDOT Bridge Manual.

4. Perform mix development testing in accordance with ASTM C143, C231, C192, C39, AASHTO T358 and T395 to assure all performance criteria can be achieved during production and placement.

5. Upon completion of mixture design, submit a copy of the proposed mixture design(s) and trial batch test results to the Department at least 45 days prior to use, for evaluation. Submit sufficient data to permit an informed evaluation. Include at least the following:

   - Concrete mixture proportions.
   - Aggregate composite gradation of mixture.
   - Material sources. Include fineness modulus and specific gravity for all aggregates.
   - Compressive Strength at 3, 7, 14 and 28 days or as required for the intended application.
   - Target slump for placement(s).
   - Target air content of plastic concrete.
   - SAM number results for trial mix
   - Paste volume calculations for mix
   - Resistivity test data

Changes other than minor fluctuations in admixture dosage rates may require a new mixture design and trial batch submittal.

DB PERFORMANCE ENGINEERED CONCRETE MIXTURES

Table 501 Performance Concrete Mixtures[1]				
Design Mix Performance Criteria				
Primary Application / use[2]	**Compressive Strength[8] (psi)**	**Air Content % desired (range)**	**Resistivity[3] (kΩ-cm) α = 1.5**	**Specialty Criteria: Scaling, freeze/thaw, or shrinkage requirements**
Superstructures: bridge decks, approach slabs, sidewalk and safety walk on decks, concrete barrier	4000	5-10	≥30	ASTM C666 DF ≥ 90% **or** AASHTO T395 SAM number ≤0.20 **and** Shrinkage per AASHTO R101, Paste Factor ≤27%
Substructures: abutments, backwalls, wing walls, columns, pier caps, pedestals	4000	5-10	≥30	ASTM C666 DF≥90% **or** AASHTO T395 SAM Number ≤0.20 **and** Shrinkage per AASHTO R101, Paste Factor ≤27%
Footings[7]	4000	5-10[5]	≥18 [6]	--
Piles, drilled shafts, underground applications	4000	5-10[5]	≥18 [6]	--
Tremie	4000	5-10[5]	≥18 [6]	--
Overhead sign bases, signal pole bases, and bases supporting overhead uses	4000	5-10	≥18 [6]	ASTM C666 DF > 90% or AASHTO T395 SAM number ≤ 0.20
Sign bases, misc items	3000	5-10	--	--
Sidewalks, gutters, curbs	4000	5-10	≥21	ASTM C666 DF ≥ 90% or AASHTO T395 SAM number ≤ 0.20
Barriers	4000	5-10	≥21	ASTM C666 DF > 90% or AASHTO T395 SAM number ≤ 0.20
Headwalls, drainage elements, pipe inverts	4000	5-10	≥18	ASTM C666 DF > 90% or AASHTO T395 SAM number ≤ 0.20
Maintenance repair	3000	5-10	≥18	

NOTES :

1. Mixture proportions will be provided by the contractor, using the fineness modulus and bulk specific gravities (saturated surface dry) of the aggregates proposed for use.

2. Any mixture developed for accelerated strength gain or early loading application shall have the rate of strength gain evaluated at the time of mixture development. The Contractor shall produce and place a 4.0 cy (minimum) trial batch at an off-contract location selected by the Contractor and agreed upon by the Engineer. The trial batch shall use the same materials and processes as those to be used to produce concrete for the contract. The Contractor shall provide the Engineer a 14-day minimum advance notification of trial batch production and shall produce and place the trial batch in the presence of the Engineer and/or the Regional Materials Engineer. The Contractor shall:

- Determine the compressive strength of the trial batch concrete at the desired time as specified in the contract documents or to meet project requirements.
- Provide an American Concrete Institute (ACI) Certified Concrete Field Testing Technician, Grade I, or higher, to perform all testing.

3. Resistivity requirements based on 4 in x 8 in cylinders measured at 28 days. Testing procedures are in accordance with AASHTO T358. Specimens not meeting resistivity criteria at 28 days will be returned to curing until 56 days of age and retested. Equivalent requirements if using Rapid Chloride Permeability Testing in accordance with AASHTO T277 for mixture development shall meet the conditions defined in the following table - Resistivity / Permeability Equivalent Requirements.

RESISTIVITY / PERMEABILITY EQUIVALENT REQUIRMENTS		
Chloride Ion Permeability	**Surface Resistivity Test**	**Rapid Chloride Permeability Test**
	4 in x 8 in cylinder	4 in dia x 2 in thick
	(kΩ-cm) $\alpha = 1.5$	Charge passed – Coulombs
High	<12	>4000
Moderate	21 – 12	>2000 – 4000
Low	37 – 21	>1000 – 2000
Very Low	254 - 37	100 – 1000
Negligible	>254	<100

4. Specialty criteria requirements shall be determined for mixture qualification unless otherwise noted. Freeze thaw durability shall be determined by ASTM C666, AASHTO T395, or ASTM C457. The use of AASHTO T395 with the Super Air Meter (SAM) shall meet the following: For mixture development, SAM $\leq$ 0.20. During concrete production on a project, SAM $\leq$ 0.30. Mixture adjustment should be considered when SAM is between 0.25 to 0.30, in accordance with AASHTO R101. Shrinkage shall be determined by volume of paste (ie: paste factor) as defined by AASHTO R101.

5. These mixes only require air content if the finished concrete will be exposed to freeze / thaw environments, defined as being within 4' of the atmospheric conditions

6. Any concrete that is buried or submerged in high sulfate and saltwater areas shall be designed for Low Chloride Ion Penetration requirements with a resistivity > 30 kΩ-cm.

7. Mass placements shall not use accelerated mixtures.

8. The design mixture performance criteria of Table 501 is also applicable to mixtures which require design compressive strength greater than 4000 psi.

SP-10. INSURANCE REQUIREMENTS

INSURANCE COVERAGE

General insurance requirements are specified in **§**DB 107-06 – Insurance.

As new work locations and involved parties become known, the Contractor shall secure coverage for any new parties as necessary per §DB 107-06A.4. Proof of coverage for the new additional insured parties shall be provided to the Department.

Proof of the Contractor's Workers' Compensation insurance and Disability insurance is required to be provided with the contract agreement. Acceptable proof of all applicable insurances shall be provided before commencing work.

Required Insurances
The following insurances are required on all contracts:

- Workers' Compensation
- Commercial General Liability
- Umbrella or Excess Liability
- Disability
- Commercial Automobile
- Special Protective and Highway Liability

Additional Required Insurances
If the box is checked, it indicates that it is a known additional required insurance:

☒ Professional Liability Insurance

☐ Marine Protection and Indemnity Insurance

Known to be required due to contract work associated with:

☐ Expected work from watercraft on navigable waters at a known location

☐ A rescue boat/skiff is required (e.g., there will be contract work over water ≥ 5 feet deep, contract work over swift moving water ≥ 2 feet deep, or other situations described in **§**107-05I – *Working Over or Near Water*)

☒ Railroad Protective Liability Insurance

A foreseeable risk has been identified for contract work to potentially negatively impact the safety of railroad movements and/or cargo at a known work location.

Railroad Entity to be Insured: CSXT
Policy Single Limit $5,000,000 / Aggregate Limit $10,000,000

☒ Pollution Liability Insurance

Policy Single Limit $1,000,000 / Aggregate Limit $1,000,000

☐ Unmanned Aircraft Systems Liability Insurance

There is required contract work involving unmanned aircraft.

Minimum Required Policy Limit: $

☒ Builders' Risk Policy

The Department has determined that certain contract work is required to be insured under a Builders' Risk policy.

Minimum Required Policy Limit: $100,000,000
Structure to be Insured: All permanent and temporary structures being constructed or rehabilitated in this Contract

LIST OF ADDITIONAL INSURED PARTIES

In accordance with Standard Specifications §107-06A.4 applicable insurance policies shall be endorsed to provide coverage to:

- The State of New York / New York State Department of Transportation
- Any municipality in which the work is being performed
- Any public benefit corporation, railroad, or public utility whose property or facilities are affected by the work
- Any consultants working for or on the project
- Agents or employees of the above listed parties

As any new locations of work are defined or added to the Contract, the Contractor shall extend coverage to any new parties that warrant coverage as per §107-06A.4. Proof of coverage for the new additional insured parties shall be provided to the Department.

Coverage shall be extended to the following known additional insured parties:

- The State of New York/New York State Department of Transportation
- Onondaga County
- Onondaga County Department of Water Environment Protection
- Onondaga County Water Authority
- City of Syracuse
- Town of Dewitt
- CSX Transportation, Inc. (CSXT)
- Charter Communication
- National Grid
- Verizon of NY
- Town of Onondaga
- Village of East Syracuse
- Windstream

SP-11. REQUIREMENTS FOR BRIDGES WITH LINK SLABS

Requirements for Bridges with Link Slabs

11.1 GENERAL

The term 'Link Slab' shall be as defined in the NYSDOT Bridge Manual.

The use of a link slab at a support with a skew angle that exceeds 45 degrees is prohibited.

For the purposes of analyzing a structure's global behavior and design of the superstructure, bearings, substructures, and foundations, a link slab shall be assumed to act as a pinned connection between the spans it joins. This results in a superstructure that behaves as simply supported at the link slab locations when subject to vertical loads yet articulates similarly to a continuous multi-span superstructure when experiencing horizontal forces and thermal movements. This behavior of the superstructure is referred to as contiguous.

The use of link slabs on a bridge in place of deck expansion joints creates a contiguous segment. A contiguous segment shall be defined as all the spans, whether they be simple span units or continuous span units, that have been joined by link slabs. A contiguous segment's length is the distance between the expansion joints located at the beginning and end of the segment.

Each contiguous segment must contain at least one substructure with fixed bearings. In certain situations, it may be advantageous to have multiple substructures, within a contiguous segment, with fixed bearings. When using this bearing arrangement, the forces generated due to the superstructure's thermal movements shall be accounted for in the analysis/design of the fixed bearings, superstructure, substructures, and foundations.

Type E.B. bearings (deformation expansion, sliding expansion, fixed), conforming to NYSDOT standards, are the only types of bearings permitted for use underneath link slabs. For piers with two lines of bearings supporting two adjacent span ends, at least one line of bearings must be expansion. Sliding expansion bearings, which use a stainless steel over PTFE slip plane, may be necessary for longer contiguous segments. Details and material requirements for sliding expansion bearings are provided in Part 7. Type E.B. sliding expansion bearings shall be in conformance with NYSDOT Special Specification Item 565.20310003. The final bearing configuration for a contiguous segment shall be in place prior to the construction of any link slab within a segment. This requirement shall be noted in the contract plans.

The required design procedure uses a simplified approach where the girder's end rotation is applied to the link slab at the ends of the debonded zone to induce a uniform bending moment throughout the debonded portion of the link slab. Although link slabs are assumed to behave as a pinned connection between spans when analyzing the structure's global behavior, they shall not be assumed to act as pinned for the purposes of designing the actual link slab or its anchorage. Link slabs shall be designed following the assumptions, procedures, and requirements used and stated in the UHPC Link Slab Design Example provided in Part 7.

Link slabs shall be detailed in accordance with the UHPC Link Slab Details provided in Part 7. The type of rebar corrosion protection used in link slabs shall match that of the superstructure slab. An expansion joint shall be provided in any concrete component placed on top of a link

slab (barrier, sidewalk, curb, etc.). Within the debonded zone, a bond breaker shall be applied at the interface of the link slab's debonded zone and concrete component(s). Any vertical, or inclined, anchorage reinforcement that protrudes from within the link slab's debonded zone shall be debonded. These details are necessary for the link slab to strain as designed and to prevent excessive cracking of any adjoining concrete component(s).

If a link slab is constructed utilizing staged construction, it may be necessary to install temporary links so that the behavior of the superstructure at the supports is uniform across its entire width. Temporary links shall be designed, detailed, and installed so that the girders where the link slab has not yet been installed will rotate at the same elevation as the centroid of the link slab that is already in place, rather than rotating at the bearings.

11.1.1 BEARING ANALYSIS ASSUMPTIONS

In the context of Section 14 of the NYSDOT LRFD Bridge Design Specifications, a bearing's resistance to movement, no matter how that resistance is generated (deformation, sliding friction, etc.), shall be considered a friction force. For the purposes of this Special Provision, the portion of a bearing's friction force attributable to surfaces sliding past one another shall be taken to be the static friction force, or the force required for stationary surfaces to initiate movement. The bearing's friction force is dependent on various mechanisms such as bearing type, geometry, material properties, pressure, and temperature. The friction force of all bearings shall be accounted for in design of the superstructure, link slabs, substructures, foundations, connections, and the bearings themselves.

Both upper bound and lower bound material property assumptions that effect the behavior of the bearing need to be considered when determining the controlling load effects on a particular bridge component. The bearing material property ranges found in Section 14 of the NYSDOT LRFD Bridge Design Specifications shall be used.

Type E.B. deformation expansion bearings provide horizontal resistance by shear deformation of the elastomer. A bearing's resistance to deformation fluctuates due to variations that occur in the elastomer's shear modulus. As such, both upper bound and lower bound values for the shear modulus need to be considered when determining the load transferred through the bearing, as well as the restraint that the bearings provide to other bridge components.

Type E.B. sliding expansion bearings provide horizontal resistance by either deformation, when the friction force does not exceed the deformation force, or by sliding when the friction force exceeds the deformation force. Both of these behaviors need to be considered when determining the load transferred through the bearing, as well as the restraint that the bearings provide to other bridge components. Being that the friction force is dependent on the materials in contact, surface finish, pressure, temperature, and presence of contaminants, the assumptions used to determine the friction force need to account for both upper bound and lower bound values of all contributing factors. To account for both deformation and sliding, the bearings shall be modeled assuming a linear spring that is limited to generating a force equal to the static friction of the sliding surfaces.

The assumed stiffness of Type E.B. fixed bearings shall be calculated as the flexural stiffness of the bearing pin in single curvature.

11.2 NEW AND REPLACEMENT BRIDGES

New and replacement bridges with link slabs shall be designed in accordance with the NYSDOT LRFD Bridge Design Specifications, NYSDOT Bridge Manual, and Sections 11.1, 11.1.1, and this section of this special provision. A contiguous segment that is comprised of both new and/or replacement substructure(s) and existing substructures shall be considered a replacement bridge.

For the design of foundations, substructures, and bearings horizontal force effects shall be determined by using either the relative stiffness or simplified distribution methods defined below.

Relative Stiffness Method
Structural models shall be used to determine the distribution of applied horizontal forces to the substructures and bearings based on the relative stiffness of all participating structural components. At a minimum, models shall include the multi-directional stiffness of the superstructure, bearings, and substructures. Each component's assumed stiffnesses need to be considered such that the controlling force effects are generated at each substructure. In order to meet this requirement multiple structural models are typically needed to envelope variations in component stiffnesses. Given the complexities of performing a structural analysis where an individual component's stiffness alters the distribution of forces, combined with the need to vary stiffness assumptions, the relative stiffness method often lends itself to the use of structural modeling software.

Simplified Distribution Method
Assume that all applied horizontal forces, except for friction and uniform temperature, act on the fixed support. The horizontal forces acting on expansion supports shall be computed using the tributary length of the superstructure, except for friction and uniform temperature. Forces due to friction and uniform temperature shall be calculated under the assumption that the fixed support, and its bearings, are infinitely stiff while using stiffness assumptions at expansion supports that produce the controlling force effects at each substructure. The simplified distribution method shall not be used when multiple substructures within a contiguous segment have fixed bearings.

All forces due to external restraints, such as friction of sliding approach slabs and soil pressure acting on nonconventional abutments, shall be included when determining the thermal forces acting on the substructures. Forces due to external restraints shall be ignored when determining all the other forces acting on the substructures.

Reinforced concrete columns, solid pier stems, and abutment stems shall be modeled using partially cracked section properties that are assumed to be equal to one-half the uncracked transformed section. The load factor for uniform temperature (TU) shall be taken as 1.0 for all the Strength and Service load combinations.

All seismic provisions for new and replacement bridges shall apply and bearing pins shall not be designed to 'fuse' during a seismic event.

The requirements of NYSDOT LRFD Bridge Design Specifications Article 4.7.4.4 shall apply to all substructures that are located underneath a link slab. The length (L) in equation 4.7.4.4-1 shall be taken as the distance from the centerline of the support, for which the support length is being computed, to the furthest expansion joint or jointless abutment of the contiguous segment.

11.3 EXISTING BRIDGES

When link slabs are installed on an existing bridge, a contiguous segment is formed which results in changes to the structure's global behavior. A structural analysis is required to quantify the changes in the horizontal forces acting on existing substructures and foundations. The results of this analysis, along with any other sources of additional load, shall be used to determine if any of the existing substructures, including their foundations, need to be strengthened or replaced, to meet the projects requirements. The Department uses both a simplified analysis and a refined analysis for analyzing existing bridges retrofitted with link slabs. A refined analysis shall be used only if a simplified analysis shows an increase in the longitudinal forces acting on a substructure.

The requirements of NYSDOT LRFD Bridge Design Specifications Article 4.7.4.4 shall apply to all substructures that are located underneath a link slab. If a substructure does not meet these requirements in its existing state, the bridge seat shall be widened or restrainers shall be installed. Restrainers shall be capable of supporting the spans at the extreme limit state if unseating of the superstructure were to occur. Additionally, restrainers shall not transfer horizontal forces from the superstructure to the substructures. The length (L) in equation 4.7.4.4-1 shall be taken as the distance from the centerline of the support, for which the support length is being computed, to the furthest expansion joint, or abutment, adjacent to the contiguous segment.

11.3.1 SIMPLIFIED ANALYSIS OF CONTIGUOUS SEGMENTS

A simplified analysis only considers the relative change in longitudinal forces acting on the substructures due to the installation of link slabs, new bearings, elimination of longitudinal deck joints, and any other relevant superstructure and substructure modifications.

The premise of a simplified analysis is that as long as the existing structure is competent and the installation of link slabs, along with any other relevant modifications, does not increase the forces on the substructures, then using a simplified analysis for link slab retrofits is a valid way to eliminate bridge joints without needing to analyze each and every component of the existing structure. If the new factored longitudinal forces are found to be greater than the existing factored longitudinal forces, a refined analysis shall be used to determine if any of the existing substructures, and their foundations, need to be strengthened, or replaced, to meet the projects requirements.

When performing a simplified analysis, it is important that the forces be calculated using the same methodology, assumptions, and procedures for both the existing and proposed condition. The exact methodology for applying the forces is inconsequential, as the analysis is looking for the change in applied forces, not the magnitude of the forces. A consistent approach to how the forces are calculated is necessary to accurately capture how the link slabs, along with any other relevant modifications to the structure, alter the forces acting on the substructures. The longitudinal forces used in a simplified analysis shall be those acting at the bridge seat elevation.

The requirement to perform a seismic analysis, meet seismic requirements, and satisfy the Extreme Event I load combination is waived when using the simplified method.

All bearings shall be designed according to the NYSDOT LRFD Bridge Design Specifications and NYSDOT Bridge Manual. All fixed bearing pins shall be designed to resist only the Strength I, III, and V load combinations. Additionally, fixed bearing pins shall not be designed to meet the

requirement for 15% of the total vertical force as stated in Article 14.7.9.2 of the NYSDOT LRFD Bridge Design Specifications. The minimum pin diameter given on the NYSDOT BD Sheets is waived and the smallest available pin diameter that satisfies the design shall be used; over-designing the pin is prohibited. This is required so that during a seismic event the bearing pins will act as a 'fuse', essentially isolating the superstructure from the substructure in the longitudinal direction, preventing excessive damage to the fixed substructure(s).

Given that a simplified analysis only considers the changes in longitudinal forces acting on the substructures, all substructures must be provided with restraint to the superstructure's movement in the lateral direction by the use of guides or keeper angles on the bearings, or shear block(s) on the bridge seats of all substructures, including those with fixed bearings. This results in the transverse loads being shared by all the substructures predominantly along the strong axis of the substructures and foundations. Lateral restraints shall be designed to allow transverse temperature related movement of the superstructure and be aligned with the superstructures assumed direction of thermal movement.

Analysis requirements for comparing the longitudinal forces acting on existing substructures are as follows:

1. Structural models shall be created, for the existing and proposed conditions, that include the abutments, piers, bearings, and superstructure. The objective of these models is to get an accurate assessment of how the longitudinal loads are distributed to the substructures, within a contiguous segment, based on the superstructure's continuity and the relative stiffness of all the supports, which shall include the combined stiffness of the bearings and columns, or stems, at each substructure. An appropriate level of refinement shall be provided in the models to meet this objective.

2. Substructures that are skewed 20° or less to the assumed direction of applied horizontal loads may be modeled as a single element whose section properties represent the combined stiffness of the columns when bending about the substructure's longitudinal axis. Substructures that exceed this skew limit shall be modeled such that bi-axial bending and the corresponding substructure stiffness are accounted for.

3. Reinforced concrete columns, solid pier stems, and abutment stems shall be modeled using partially cracked section properties that are assumed to be equal to one-half the uncracked transformed section.

4. Existing and proposed longitudinal loads shall be computed in accordance with the NYSDOT LRFD Bridge Design Specifications. The load factor for uniform temperature (TU) shall be taken as 1.0 for all the Strength load combinations.

5. When determining braking forces, it shall be assumed that the direction of travel will not change in the future, and that the actual number of lanes that is currently carried, or will be carried at the completion of the project, is used, in lieu of using the number of design lanes that fit within the roadway width.

6. For existing superstructures that are supported on steel rocker bearings or steel sliding bearings, it shall be assumed that 100 percent of the applied longitudinal forces act on the fixed support while each expansion support resists a longitudinal force proportional to their supported tributary length of the superstructure. The sum of longitudinal forces

resisted by all substructures will exceed the total applied longitudinal force to the superstructure.

7. All forces due to external restraints, such as friction of sliding approach slabs and soil pressure acting on nonconventional abutments, shall be included when determining the thermal forces acting on the substructures. Forces due to external restraints shall be ignored when determining all the other forces acting on the substructures.

11.3.2 REFINED ANALYSIS OF CONTIGUOUS SEGMENTS

A refined analysis shall consider all the forces acting on the substructures and their foundations including the effects of link slabs, bearings, and any other relevant superstructure and substructure modifications. These forces shall be determined using a relative stiffness analysis where the distribution of lateral loads is a function of the multi-directional stiffness of the superstructure, bearings, and substructures.

The capacity, or resistance, of all existing substructures and foundations then needs to be evaluated for the new factored loads. If any of the existing substructures or foundations of bridges originally designed with the NYSDOT LRFD Bridge Design Specifications no longer meet their original design code, they shall be strengthened or replaced as part of the scope of the project. For all other bridges, if any of the existing substructures or foundations do not meet either the NYSDOT LRFD Bridge Design Specifications, or the NYSDOT Standard Specifications for Highway Bridges using HS 20 loading, they shall be strengthened or replaced as part of the scope of the project.

All bearings shall be designed according to the NYSDOT LRFD Bridge Design Specifications and the NYSDOT Bridge Manual. All fixed bearing pins shall be designed to resist only the Strength I, III, and V load combinations. Additionally, the pins shall not be designed to meet the requirement for 15% of the total vertical force, as stated in Article 14.7.9.2 of the NYSDOT LRFD Bridge Design Specifications, and the minimum pin diameter given on the NYSDOT BD Sheets is waived. These exemptions are required so that during a seismic event the bearing pins will act as a ‘fuse’ that limits the applied seismic load on the existing fixed substructure(s) to be only slightly greater than the non-seismic loads.

The requirement to perform a seismic analysis, for the purposes of determining the seismic lateral loads, is waived when using the refined method. Rather, the seismic loads used for either the Extreme Event I load combination (if using LRFD), or Group VII (if using LFD), shall be taken as the lateral resistance of the bearing pins. The lateral resistance of the bearing pins shall be the only transverse and longitudinal loads included in seismic load combinations.

The lateral resistance of a bearing pin shall be determined using equation 6.7.6.2.1-1 of the NYSDOT LRFD Bridge Design Specifications with the following modifications: 1) M_u replaced by V_u times the height of the bearing pad (h_{pad}) (combined thickness of elastomeric layers and internal steel plates), 2) F_y replaced by the ultimate strength (F_u) of the steel pin, 3) resistance factors removed, and 4) less than or equal to 0.95 replaced by equal to 1.0. The equation shall then be solved for V_u and the solution used as the lateral resistance of a single bearing pin. The modified equation is as follows:

$$\frac{6.0V_u h_{pad}}{D^3 F_u} + \left(\frac{2.2V_u}{D^2 F_u}\right)^3 = 1.0$$

Analysis requirements when performing a refined analysis are as follows:

1. A structural model for the proposed conditions shall be created that includes the abutments, piers, bearings, and superstructure. The objective of this model is to get an accurate assessment of how the horizontal loads will be distributed to the substructures, within a contiguous segment, based on the superstructure's stiffness and continuity, as well as the relative stiffness of all the supports, which shall include the combined stiffness of the bearings and columns, or stems, at each substructure. An appropriate level of refinement shall be provided in the model to meet this objective.

2. Reinforced concrete columns, solid pier stems, and abutment stems shall be modeled using partially cracked section properties that are assumed to be equal to one-half the uncracked transformed section.

3. The proposed horizontal loads shall be computed in accordance with the appropriate design code, as defined above. When using the NYSDOT LRFD Bridge Design Specifications, the load factor for uniform temperature (TU) shall be taken as 1.0 for all the Strength load combinations.

4. When determining braking forces, it shall be assumed that the direction of travel will not change in the future, and that the actual number of lanes that is currently carried, or will be carried at the completion of the project, is used, in lieu of using the number of design lanes that fit within the roadway width.

5. All forces due to external restraints, such as friction of sliding approach slabs and soil pressure acting on nonconventional abutments, shall be included when determining the thermal forces acting on the substructures. Forces due to external restraints shall be ignored when determining all the other forces acting on the substructures.

SP-12. NATIONAL HISTORIC PRESERVATION ACT OF 1966 SECTION 106 PROGRAMMATIC AGREEMENT

PROGRAMMATIC AGREEMENT
AMONG
THE FEDERAL HIGHWAY ADMINISTRATION
THE NEW YORK STATE HISTORIC PRESERVATION OFFICE
THE ADVISORY COUNCIL ON HISTORIC PRESERVATION
THE NEW YORK STATE DEPARTMENT OF TRANSPORTATION AND
THE ONONDAGA NATION
PURSUANT TO 36 CFR § 800.14(b)(1)(ii)
IMPLEMENTING SECTION 106 OF THE NATIONAL HISTORIC PRESERVATION ACT FOR
PIN 3501.60, FOR THE INTERSTATE 81 VIADUCT PROJECT
ONONDAGA COUNTY, NEW YORK
16PR06314

WHEREAS, the Federal Highway Administration (FHWA), in coordination with the New York State Department of Transportation (NYSDOT), proposes the Interstate 81 (I-81) Viaduct Project (the Project), a federal-aid transportation project in the City of Syracuse, Onondaga County, New York; and

WHEREAS, the purpose of the Project is to address structural deficiencies and non-standard highway features while creating an improved transportation corridor through the City of Syracuse that meets the transportation needs and provides the infrastructure to support long-range transportation planning efforts; and

WHEREAS, the Project constitutes an undertaking subject to review under Section 106 of the National Historic Preservation Act of 1966 (54 U.S.C. § 306108) and its implementing regulation, 36 CFR Part 800: *Protection of Historic Properties,* as amended; and

WHEREAS, based on a balanced consideration of the need for safe and efficient transportation; the social, economic, and environmental effects of the project alternatives; and national, state, and local environmental protection goals, the Community Grid Alternative has been identified as the Project's preferred alternative, as indicated in the Draft Environmental Impact Statement (Draft EIS) for the Project; and

WHEREAS, the Community Grid Alternative proposes the demolition of the existing viaduct between the New York, Susquehanna and Western (NYS&W) Railway bridge and the I-81/I-690 interchange and replacement with a street-level arterial; and

WHEREAS, under the Community Grid Alternative, the existing I-81 between its northern and southern interchanges with Interstate 481 (I-481) will be re-designated as a business loop of I-81 (BL 81); existing I-81 between the southern I-81/I-481 interchange (Interchange 16A) and the I-81/I-481 northern interchange (Interchange 29) in Cicero would be de-designated as an interstate; and existing I-481 will be re-designated as the new I-81; and

WHEREAS, construction of the Project will be carried out in multiple construction phases; and

WHEREAS, the FHWA in coordination with the NYSDOT, and in consultation with the New York State Historic Preservation Office (SHPO), is progressing the Section 106 process with a Programmatic Agreement (Agreement) in accordance with 36 CFR §800.14(b)(1)(ii) because the effects of the Project cannot be fully determined prior to approval of the Project; and

WHEREAS, the NYSDOT participated in the consultation, has responsibilities for implementing stipulations under this PA, and has been invited to be a signatory to this PA; and

WHEREAS, the Advisory Council on Historic Preservation (ACHP), at the invitation of the FHWA, is participating in Section 106 consultation for the Project; and

WHEREAS, based on the Project's location within the geographical areas of interest identified by the Onondaga Nation and the Tuscarora Nation for Section 106 consultation, the FHWA formally initiated government-to-government consultation with the Nations for the I-81 Viaduct Project in accordance with 36 CFR §800.2(c)(2)(ii), and the Tuscarora Nation subsequently agreed to defer their Section 106 consultation status on the Project to the Onondaga Nation; and

WHEREAS, the FHWA approved requests from the following individuals and organizations to participate as Consulting Parties in the Section 106 process, providing them an opportunity to articulate their views on the identification of historic properties and evaluation of the Project's effects on those properties:

- Syracuse-Onondaga County Planning Agency
- Syracuse Housing Authority
- Syracuse Metropolitan Transportation Council
- Town of DeWitt Historian, Historical Preservation Society
- Preservation League of New York State
- City of Syracuse, Department of Engineering
- Downtown Committee of Syracuse
- Preservation Association of Central New York
- Central New York Chapter of the American Institute of Architects (AIA-CNY)
- Central New York Regional Planning and Development Board
- The Erie Canal Museum
- The Northside Urban Partnership
- Northeast Hawley Development Association, Inc.
- Quante Wright
- Douglas Armstrong
- Historic Oakwood Preservation Association
- Housing Visions; and

WHEREAS, the FHWA in coordination with the NYSDOT, and in consultation with the SHPO, established an Area of Potential Effects (APE) (**Appendix 1**) in accordance with 36 CFR § 800.4(a)(1) to incorporate potential direct and indirect effects associated with the combined scope of work for the two Build Alternatives that were evaluated in the Draft EIS for the Project, the Viaduct Alternative and the Community Grid Alternative; and

WHEREAS, due to the size of the APE, existing conditions within an urban setting, and inaccessibility of some areas for testing in advance of construction, the FHWA and NYSDOT, in consultation with the SHPO, agreed to implement a phased process to defer the final identification and evaluation of archaeological properties, pursuant to 36 CFR § 800.4(b)(2), as provided for in this Agreement; and

WHEREAS, the NYSDOT has retained professional archaeologists (henceforth referred as "Archaeologist") meeting the Secretary of the Interior's Professional Qualification Standards for Archaeology (36 CFR Part 61) to conduct archaeological surveys and prepare reports in accordance with accepted professional standards, including the SHPO *Phase I Archaeological Report Format Requirements* (2005), the New York Archaeological Council's *Standards for Cultural Resources Investigations and the Curation of*

Archaeological Collections in New York (1994), and the *New York State Education Department Cultural Resources Survey Program Work Scope Specifications for Cultural Resources Investigations on New York State Department of Transportation Projects* (2004); and

WHEREAS, in accordance with New York State Education Law Section 233, all scientific specimens and collections, works of art, objects of historic interest and similar property appropriate to a general museum, if owned by the state and not placed in other custody by a specific law, shall constitute the collections of the state museum, and the state museum shall be the custodian of the collections, shall perform standard curatorial, research and educational activities; and

WHEREAS, the Onondaga Nation has expressed an interest in curating any Haudenosaunee artifacts recovered through archaeological investigations for the Project; and

WHEREAS, the FHWA and the NYSDOT recognize other regulations, including the Native American Graves Protection and Repatriation Regulations (43 CFR Part 10), which will be followed as appropriate; and

WHEREAS, the NYSDOT on behalf of the FHWA, coordinated with the SHPO and the Onondaga Nation on the development of the *Phase IA Archaeological Sensitivity Assessment,* September 2016 (*Phase IA Assessment*), to establish the likely presence of archaeological resources within the APE and develop historic contexts for the Native American and Historic Periods; and

WHEREAS, the *Phase IA Assessment* concluded that the potential presence of archaeological sites within the APE is highly variable, requiring different methods of archaeological investigation depending on existing conditions, the anticipated depth of proposed Project impacts, and the type and extent of prior ground disturbance at specific locations; and

WHEREAS, the FHWA and the NYSDOT recognize that sensitivity for Haudenosaunee artifacts also depends on the proximity to current and historic waterways and the Onondaga Nation's oral history or other indigenous knowledge of ancestral presence in an area; and

WHEREAS, the Project's Archaeologists prepared the *Phase IB Archaeological Survey Work Plan: Plan for Phase IB Archaeological Survey and Archaeological Monitoring during Construction Including Data Recovery*, October 2017 (*Phase IB Work Plan*), identifying areas within the Project's APE for direct effects to be investigated through shovel testing and machine-aided testing in advance of the Project's construction and archaeological monitoring during construction; and

WHEREAS, the NYSDOT on behalf of the FHWA, coordinated with the SHPO and Onondaga Nation on the development of the *Phase IB Work Plan*, met to discuss the Onondaga Nation's concerns on June 13, 2017, considered and addressed comments received, and received notice by letter dated November 3, 2017 that the SHPO had no further concerns with the document; and

WHEREAS, the Project's Archaeologists conducted the initial stage of field investigations in accordance with the approved *Phase IB Work Plan* (**Appendix 2**) between November 2017 and September 2020, and the NYSDOT provided copies of the report entitled *Phase IB Archaeological Survey: Shovel Testing*, revised September 2020, (*Shovel Testing Report*) to the SHPO, the Onondaga Nation, and the Tuscarora Nation for review and comment; and

WHEREAS, the shovel testing portion of the Phase IB survey identified two historic period archaeological sites, the Britton Lime Kiln Site and the Crouse Road Site, which were recommended not eligible

for the National Register of Historic Places (NRHP), and did not identify any Native American cultural artifacts, materials or archaeological sites; and

WHEREAS, based on review of the *Shovel Testing Report*, the SHPO expressed no concerns or comments on the report by letter dated October 26, 2020 and concurred with the report's finding and recommendations by letter dated January 11, 2021; and

WHEREAS, the FHWA and NYSDOT met with representatives of the Onondaga Nation on January 20, 2021 to consider and discuss the Nation's recommendation for additional pre-construction investigation due to concerns regarding the potential presence of cultural artifacts and human remains in previously disturbed soils and unscreened fill materials, and the Onondaga Nation's further recommendation for on-site monitors during construction; and

WHEREAS, the FHWA and NYSDOT determined that additional pre-construction shovel testing was not warranted, and agreed to provide opportunities for representatives of the Onondaga Nation to participate in archaeological monitoring during construction in locations specified in the approved *Phase IB Work Plan*; and

WHEREAS, due to the Project's geographic size, location, and construction complexities, the FHWA has determined that Native Nation monitoring is warranted in locations within one quarter mile of documented existing and historic waterbody alignments where construction activities would involve excavation below ground surface (excluding existing infrastructure), as depicted in **Appendix 9**; and

WHEREAS, in accordance with 36 CFR §800.5(a)(3), a phased process will be used to apply the *criteria of adverse effect* to any National Register (NR) eligible archaeological properties that may be identified through the phased identification and evaluation efforts being conducted pursuant to 36 CFR §800.4(b)(2) and described in the approved *Phase IB Work Plan*; and

WHEREAS, the Onondaga Nation has expressed a preference for Archaeologists with direct experience or advanced training in Haudenosaunee artifacts and culture; and

WHEREAS, the NYSDOT, in coordination with the FHWA and in consultation with the SHPO, conducted an inventory and evaluation of architectural properties within the APE and identified four (4) historic districts with a total of 97 contributing resources, and 98 individual architectural properties listed or eligible for inclusion in the National Register of Historic Places; and

WHEREAS, the NYSDOT in coordination with the FHWA applied the *criteria of adverse effect*, as defined by 36 CFR §800.5(a)(1), to evaluate known effects on identified historic architectural properties within the APE for the Viaduct Alternative and the Community Grid Alternative, and prepared documentation as specified in 36 CFR §800.11(e); and

WHEREAS, the NYSDOT concluded, as recorded in the *Finding Documentation*, that the Viaduct Alternative would result in an *adverse effect* on NR-eligible or listed architectural properties within the APE and the Community Grid Alternative would have *no adverse effect* on NR-eligible or listed architectural properties within the APE; and

WHEREAS, the NYSDOT, in coordination with FHWA, provided the draft *Finding Documentation* to the Onondaga Nation, Tuscarora Nation, and other Consulting Parties on August 12, 2019 for a 30-day review period; and

WHEREAS, the NYSDOT, in coordination with FHWA, provided the draft *Finding Documentation* to the SHPO on February 10, 2021 for their preliminary review and comment; and

WHEREAS, based on review of the draft *Finding Documentation,* the SHPO provided an opinion on March 4, 2021, concurring with the assessment of effects on historic architectural resources for the Viaduct Alternative and the Community Grid Alternative, and agreed with the NYSDOT recommendation to seek to develop a Programmatic Agreement to guide the remainder of the Section 106 consultation process for the Project; and

WHEREAS, the NYSDOT in coordination with FHWA provided the *Finding Documentation* to the SHPO on April 8, 2021 for their final review and concurrence; and

WHEREAS, based on review of the provided *Finding Documentation*, the SHPO concurred that the Community Grid Alternative would not adversely affect historic architectural resources by letter dated April 15, 2021; and

WHEREAS, based on review of the provided information, the FHWA determined by letter dated April 23, 2021, that the Viaduct Alternative would result in an *adverse effect* on historic architectural resources, and the Community Grid Alternative (preferred alternative) would have *no adverse effect* on historic architectural resources, and concurred with developing a Programmatic Agreement to outline the continued Section 106 consultation process and assessment for archaeological resources; and

WHEREAS, the Onondaga Nation has participated in the consultation, has responsibilities for implementing stipulations under this Agreement, and in a phone conversation with the FHWA on October 7, 2021, accepted the FHWA's invitation to be an invited signatory to this Agreement; and

WHEREAS, the FHWA invited the other Consulting Parties to sign the Agreement as Concurring Parties; and

NOW, THEREFORE, the FHWA, SHPO, ACHP, NYSDOT and the Onondaga Nation agree that the Project shall be implemented in accordance with the following stipulations in order to take into account the effect of the Project on historic properties.

STIPULATIONS

The FHWA, in coordination with the NYSDOT, shall ensure that the following measures are carried out.

I. Roles and Responsibilities

A. As the lead federal agency, FHWA shall be legally responsible for all Section 106 findings and determinations and shall ensure that the terms of this Agreement are carried out to complete the Section 106 process. The FHWA shall carry out Nation-to-Nation consultation with the Onondaga Nation as described in Stipulation IV and **Appendix 5**.

B. The NYSDOT shall coordinate, manage, and oversee implementation of the approved *Phase IB Work Plan* for continuing archaeological investigations through Final Design and Construction phases of the Project, as outlined in Stipulation V, with the assistance of Archaeologists and Native Nation Monitors. The NYSDOT's commitment and ability to complete the implementation of the approved *Phase IB Work Plan* will not be impaired if the Native Nation Monitors do not participate in the full range of continuing archaeological investigations if the NYSDOT has provided the required notice, as specified in **Appendix 6**.

C. The SHPO shall advise and assist the FHWA in carrying out Section 106 responsibilities for the Project. Based on information provided by the NYSDOT on behalf of the FHWA, the SHPO shall provide comments and/or concurrence within the specified review periods to determine National Register eligibility and consider measures to avoid, minimize, or mitigate any adverse effects on archaeological sites that may be identified through continuing archaeological investigations.

D. The ACHP shall provide policy guidance to the FHWA and advise on the resolution of any dispute or objection from a signatory to this Agreement, a concurring party, or member of the public, as needed.

E. The Onondaga Nation will continue to participate in ongoing Section 106 consultation for the identification and evaluation of Haudenosaunee cultural materials, artifacts, archaeological resources and any potential human remains. The Onondaga Nation will also provide Native Nation Monitors to participate in archaeological fieldwork, as specified in **Appendix 4, Appendix 5,** and **Appendix 6**. Construction shall not be precluded from progressing if Native Nation Monitors are not present and the NYSDOT has provided the required notice, and **Appendix 6**.

II. Professional Standards

A. All archaeological investigations carried out pursuant to this Agreement shall be conducted by or under the direct supervision of an archaeologist meeting the Secretary of the Interior's Professional Qualifications Standards for Archaeology (36 CFR Part 61).

B. Native Nation monitoring will be conducted by individuals selected by the Onondaga Nation, and are not required to meet the standards defined in Stipulation II A. The FHWA and/or the NYSDOT will defer to the Onondaga Nation to determine how Native Nation Monitors will be designated as such by the Onondaga Nation.

III. Curation

A. All collections, consisting of artifacts, notes and other materials associated with archaeological investigations, will be curated in accordance with 36 CFR Part 79 – Curation of Federally-Owned and Administered Archaeological Collections, and the New York Archaeological Council (NYAC)

Standards for Cultural Resource Investigations and the Curation of Archaeological Collections in New York State (1994).

B. For the purpose of study, artifacts collected through archaeological investigations for the Project will be retained by the Archaeologist for a period of up to one year after the end of the Section 233 permit. The Archaeologist may request extensions, as needed, from the State Museum. The Archaeologist shall collect, process, and prepare artifacts in accordance with the New York State Museum's (NYSM) Accession Policy and Accession Standards, as articulated in the NYSM "Archaeological Curation Guidelines".

1. The Onondaga Nation may submit a request to the State Museum for a loan(s) of any artifact(s) or collections accessioned by the NYSM, consistent with that institution's established policy and procedures.

2. If the State Museum declines to accession any Haudenosaunee artifact(s) or archaeological collections from state lands under the jurisdiction of the NYSDOT, the NYSDOT shall then offer these objects and materials to the Onondaga and Tuscarora Nations.

3. If any artifacts which may be or are determined to be cultural objects, as defined by the Native American Graves Protection and Repatriation Act, 25 U.S.C. § 3001 et seq., are discovered, the NYSDOT shall notify the Onondaga and Tuscarora Nations and the New York State Museum and the cultural objects shall be immediately offered to the New York State Museum for review, inventory/summary, publication of notice, and repatriation to the Nations, pursuant to NAGPRA. If the State Museum declines to take possession or control of cultural objects, the NYSDOT shall immediately offer to return the objects to the Onondaga and Tuscarora Nations. If both the State Museum and the Onondaga and Tuscarora Nations decline to take possession of artifacts that are or may be cultural objects, as defined by NAGPRA, these materials may be retained, processed, and prepared by the Archaeologist in the same manner as any other artifacts collected during construction.

IV. Native Nation Consultation

A. The FHWA, in coordination with the NYSDOT, shall continue to carry out formal Section 106 consultation with the Onondaga Nation for the identification and evaluation of cultural materials, artifacts and archaeological features encountered during machine-aided testing or archaeological monitoring during construction, as specified in **Appendix 5** and **Appendix 6**.

B. The FHWA, in coordination with the NYSDOT, shall carry out consultation with the Onondaga Nation for the identification of any human remains, or potential human remains, that may be encountered through archaeological investigations in identified areas of sensitivity or as unanticipated discoveries during construction of the Project, as specified in **Appendix 3**, **Appendix 5** and **Appendix 6**. The consultation will include a consideration of measures to avoid, minimize, or mitigate adverse effects.

C. All signatories to this Agreement shall follow the consultation procedures and protocols as specified in **Appendix 5** and **Appendix 6**.

V. Identification and Evaluation of Archaeological Properties

The NYSDOT, in coordination with the FHWA, shall complete the identification and evaluation of archaeological properties pursuant to 36 CFR §800.4(b) and (c) by implementing the approved *Phase*

IB Work Plan for the Project (**Appendix 2**). Archaeological investigations will proceed through the Final Design and Construction phases of the Project, as locations become accessible.

A. Construction Phase Archaeological Work Plan

1. Archaeological investigations during construction shall be carried out in accordance with a Construction Phase Archaeological Work Plan to be developed by the Archaeologist as additional information regarding construction phasing becomes available. The NYSDOT shall provide the draft document to the SHPO, Onondaga Nation, and FHWA for review and comment prior to approval.

    a. The Construction Phase Archaeological Work Plan will supplement the approved *Phase IB Work Plan* and will provide more detail regarding potential types of archaeological finds anticipated to occur in areas of known archaeological sensitivity.

    b. Using engineering plans, the Construction Phase Archaeological Work Plan will document the evaluation of anticipated disturbance in archaeologically sensitive areas, describe strategies for implementing the approved Phase IB Work Plan, and describe the sequencing of archaeological survey and/or monitoring based upon the anticipated construction schedule.

    c. The NYSDOT, on behalf of the FHWA, will consult with the SHPO and with the Onondaga Nation for areas identified as sensitive for Native American artifacts or the potential presence of human remains on the development of the Construction Phase Archaeological Work Plan.

    d. Following established standards and methodologies, the NYSDOT, on behalf of the FHWA, shall carry out remaining investigations to identify archaeological properties that may be affected by the Project, consistent with the Construction Phase Archaeological Work Plan.

B. Machine-Aided Archaeological Testing in Advance of Construction

1. Machine-aided testing will be conducted in advance of construction at selected locations within the APE for direct effects, as identified in the approved *Phase IB Work Plan*, to investigate the potential presence of intact archaeological deposits or features below disturbed soil layers, fill and/or pavement. Machine-aided archaeological excavations will be scheduled and timed to occur immediately before the start of the Project's construction activities at those locations.

2. The Onondaga Nation will provide Native Nation Monitors to participate in machine-aided archaeological testing, as described in **Appendix 5**, in locations specified in the approved Phase IB Work Plan.

3. Within two weeks following the completion of machine-aided testing, the Archaeologist will provide an end-of-field letter to the NYSDOT, summarizing the preliminary results, including recommendations for additional investigations for Phase II testing, as needed, to determine National Register eligibility for potentially eligible resources.

4. The NYSDOT, in coordination with the FHWA and in consultation with the SHPO, will consider the Archaeologist's recommendation(s) for Phase II site examination. If Native American cultural materials or features are identified, the NYSDOT and the FHWA will seek and consider input from the Onondaga Nation.

5. The Archaeologist will proceed with Phase II field investigations immediately upon approval from the NYSDOT.
6. The Archaeologist will prepare and submit to the NYSDOT a draft report summarizing the results of Phase IB machine-aided testing and Phase II field investigations of identified archaeological sites. The report will provide an eligibility recommendation for each site.
    a. The NYSDOT will distribute the draft report to the SHPO, FHWA, and Onondaga Nation with a 30-day period for review and comment. The NYSDOT, in coordination with the FHWA, will consider any comments received during the review period and direct the Archaeologist to make revisions as needed to finalize the report.
    b. The NYSDOT, in coordination with the FHWA, will formally request SHPO concurrence with the recommended eligibility findings in the report.
6. If there are no NR-eligible archaeological properties identified as a result of machine-aided testing, there will be no further archaeological investigations until archaeological monitoring is implemented during construction of the Project, in accordance with the approved *Phase IB Work Plan* (**Appendix 2**).
7. The NYSDOT, on behalf of the FHWA, will consult with the SHPO and with the Onondaga Nation for areas identified as sensitive for Native American artifacts or the potential presence of human remains regarding the need for archaeological monitoring during construction in locations identified but not selected for machine-aided testing.

C. Archaeological Monitoring during Construction

1. Archaeological monitoring during construction will be conducted under the supervision of an Archaeologist meeting the Secretary of the Interior's Professional Qualification Standards (36 CFR 61, Appendix A).
2. The Onondaga Nation will provide Native Nation Monitors to participate in archaeological monitoring during construction in locations specified in the approved *Phase IB Work Plan,* in any additional areas designated for archaeological monitoring in the Construction Phase Archaeological Work Plan, and in any areas within 50 meters of where unanticipated discoveries of Haudenosaunee or potentially Haudenosaunee archaeological resources, cultural objects, including objects of cultural patrimony, sacred objects, and funerary objects, or human remains are made, as described in **Appendix 5**.

VI. Consultation to Avoid, Minimize or Mitigate Adverse Effects on Archaeological Properties

A. The NYSDOT, in coordination with the FHWA and in consultation with the SHPO, and with the Onondaga Nation for Native American sites, will apply the criteria of adverse effect (36 CFR §800.5(a)(1)) to NR-eligible archaeological properties within the APE, and document its findings.

B. If, as a result of this analysis, the FHWA determines that the Project may have an adverse effect on any archaeological property, the FHWA, in coordination with the NYSDOT, will consult with the SHPO, and with the Onondaga Nation for Native American sites, to explore measures to avoid, minimize, or mitigate adverse effects. The FHWA, in coordination with the NYSDOT, will ensure the implementation of any modifications or conditions to avoid or minimize adverse effects, as agreed upon through consultation.

C. In the event that adverse effects cannot be avoided, Data Recovery excavations may be considered in consultation among the FHWA, SHPO, and the NYSDOT, and including the Onondaga Nation for

Native American sites. If it is determined through consultation that Data Recovery is an appropriate treatment, the NYSDOT will direct the Archaeologist to prepare an Archaeological Data Recovery Plan (DRP) for each affected property, consistent with the above-referenced standards and guidelines for archaeology. DRPs for more than one individual property may be compiled as a single report for the purpose of review by the SHPO and by the Onondaga Nation for Native American sites.

D. If adverse effects cannot be fully avoided, and Data Recovery is not determined appropriate, the FHWA, in coordination with NYSDOT, consultation with the SHPO, and with the Onondaga Nation for Native American sites, will continue consultation to determine alternate mitigation such as preservation in place, site burial, or other measures, and will prepare an archaeological treatment plan for each site. Treatment plans for more than one individual site may be compiled as a single report for the purpose of review by the SHPO and by the Onondaga Nation for Native American sites.

E. The FHWA, in coordination with NYSDOT, will distribute the treatment plan or DRP for a 15-calendar day review and comment by the SHPO, and by the Onondaga Nation for Native American sites.

FHWA, in coordination with the NYSDOT and in consultation with the SHPO, and with the Onondaga Nation for Native American sites, will consider all timely comments from reviewing parties in finalizing the treatment plan or DRP. If no reviewing party comments are received within 15 calendar days, FHWA will approve the treatment plan or DRP and ensure its implementation.

VII. Changes in Project Scope

In the event of any changes to the Project scope, the following measures shall be implemented in consultation with the signatories and concurring parties to this Agreement:

A. The FHWA, in coordination with the NYSDOT and in consultation with the SHPO, shall assess and revise the Project APE as needed to incorporate any additional areas where the Project may have the potential to affect historic properties.

B. Following established standards and methodologies, the NYSDOT, on behalf of the FHWA, shall carry out additional investigations to identify historic architectural and archaeological properties that may be affected by the Project.

C. The FHWA, in coordination with the NYSDOT, shall document an assessment of the Project's effects on any new historic properties and explore measures to avoid, minimize, or mitigate effects on these properties in consultation with the SHPO, Onondaga Nation, and other Section 106 Consulting Parties.

D. The FHWA, in coordination with the NYSDOT, shall ensure the preparation of appropriate reports and documents, shall notify Section 106 Consulting Parties as appropriate, including the Onondaga Nation, of any changes in the Project's effect on historic properties, and shall provide an opportunity for review and comment.

E. If a change in project scope results in adverse effects to previously unidentified historic properties (district, site, building, structure or object), the FHWA, in coordination with the NYSDOT, shall consult with all Consulting Parties to amend the Agreement in accordance with Stipulation XIII.

VIII. Post-Review Discoveries (Archaeology)

If new archaeological resources are discovered or unanticipated effects on archaeological properties are identified during construction, and there is no Archaeologist present to conduct archaeological monitoring as stipulated herein, the NYSDOT Standard Specifications, Section 107-01 - Laws, Rules, Regulations and Permits, D. Archeological Salvage and **Appendix 6** shall apply.

In accordance with 36 CFR 800.13(b)(3), the FHWA in coordination with the NYSDOT and in consultation with the SHPO will apply the National Register criteria (36 CFR Part 63) to evaluate any new archaeological resources and to consider measures to avoid, minimize or mitigate adverse effects on NR-eligible properties. Additionally, the FHWA in coordination with the NYSDOT will consult with the Onondaga Nation for Native American cultural materials and sites.

The NYSDOT, on behalf of the FHWA, will consult with the SHPO and the Onondaga Nation regarding the need to expand the areas identified for archaeological monitoring during construction to include locations where the Project would involve excavation within 50 meters of identified Native American artifacts.

IX. Post-Review Discoveries (Human Remains)

If evidence of burials, human remains or potential human remains is encountered during construction, the NYSDOT shall suspend all work in the immediate vicinity, protect the remains from further disturbance, and immediately contact the SHPO, FHWA, ACHP, and the Onondaga Nation. The NYSDOT, in coordination with the FHWA, will implement the current *NYSDOT Procedures in the Event of the Inadvertent Discovery of Human Remains during Construction* [(hereafter "NYSDOT Inadvertent Discoveries Procedures") (**Appendix 3**)], the 2002 *Haudenosaunee Protocol for Handling Discovery of Human Remains* [(hereafter "2002 Haudenosaunee Protocol") (**Appendix 3**)], and any additional provisions incorporated in **Appendix 5** and **Appendix 6**. Construction activities in the location of the discovery will be suspended pending notification to and consultation among the SHPO, NYSDOT, FHWA, and the Onondaga Nation, in accordance with these procedures.

The NYSDOT, on behalf of the FHWA, will consult with the SHPO and the Onondaga Nation regarding the need to expand the areas identified for archaeological monitoring during construction to include locations where the Project would involve excavation within 50 meters of the unanticipated discovery of human remains.

If requested by the Onondaga Nation, the FHWA and the NYSDOT will assist the Onondaga Nation in the relocation and reinterment of human remains determined or presumed to be Native American.

X. Confidentiality

Sensitive information concerning the location, character, or ownership of archaeological resources may be withheld from public disclosure in accordance with Section 304 of the National Historic Preservation Act (54 U.S.C. § 307103).

XI. Monitoring and Reporting

Each year following the execution of this Agreement until it expires or is terminated, the FHWA, in coordination with the NYSDOT, shall provide all parties to this Agreement a summary report detailing work undertaken pursuant to its terms. Such report shall include any scheduling changes proposed, any issues encountered, and any disputes and objections received in the FHWA's efforts to carry out the terms of this Agreement.

The NYSDOT will submit to the FHWA annually a written status of each stipulation included herein. The NYSDOT will provide a written notification to the FHWA for concurrence once all stipulations have been completed. Upon FHWA concurrence, the Section 106 process will be deemed completed.

XII. Dispute Resolution

Should any signatory or concurring party to this Agreement object at any time to any actions proposed or the manner in which the terms of this Agreement are implemented, the FHWA shall consult with such party to resolve the objection. If the FHWA determines that such objection cannot be resolved, the FHWA will:

A. Forward all documentation relevant to the dispute, including the resolution proposed by the FHWA to the ACHP. The ACHP shall provide the FHWA with its advice on the resolution of the objection within thirty (30) days of receiving adequate documentation. Prior to reaching a final decision on the dispute, the FHWA shall prepare a written response that takes into account any timely advice or comments regarding the dispute from the ACHP, signatories and concurring parties and provide them with a copy of this written response. The FHWA will then proceed according to the final decision.

B. If the ACHP does not provide its advice regarding the dispute within the 30-day time period, the FHWA may make a final decision on the dispute and proceed accordingly. Prior to reaching such a final decision, FHWA shall prepare a written response that takes into account any timely comments regarding the dispute from the signatories and concurring parties to this Agreement and provide them and the ACHP with a copy of such written response.

C. The responsibilities of the FHWA to carry out all other actions subject to the terms of this Agreement that are not the subject of the dispute remain unchanged**.**

XIII. Amendments

This Agreement may be amended when such an amendment is agreed to in writing by all signatories. The amendment will be effective on the date a copy signed by all signatories is filed with the ACHP.

XIV. Termination

If any signatory to this Agreement determines that its terms will not or cannot be carried out, that party shall immediately consult with the other parties to attempt to develop an amendment per Stipulation XIII. If an amendment cannot be reached within thirty (30) days, any signatory may terminate the Agreement upon written notification to the other signatories.

Once the Agreement is terminated, and prior to work continuing on the Project, the FHWA must either (a) execute an Agreement pursuant to 36 CFR § 800.6 or (b) request, take into account, and respond

to the comments of the ACHP under 36 CFR § 800.7. The FHWA shall notify the signatories as to the course of action they will pursue.

XV. Duration

This Agreement will be null and void if its terms are not carried out within ten (10) years from the date of its execution. Prior to such time, the FHWA may consult with the other signatories to reconsider the terms of the Agreement and amend it in accordance with Stipulation XIII.

APPENDICES

Appendix 1: Area of Potential Effects

Appendix 2: *Phase IB Archaeological Survey Work Plan: Plan for Phase IB Archaeological Survey and Archaeological Monitoring during Construction Including Data Recovery*, October 2017

Appendix 3: NYSDOT Procedures in the Event of the Inadvertent Discovery of Human Remains during Construction
2002 Haudenosaunee Protocol for Handling Discovery of Human Remains

Appendix 4: Roles and Responsibilities in Construction

Appendix 5: Native Nation Consultation

Appendix 6: Coordination and Communication Protocols in Construction
Protocols for Communication in Construction (Flowchart)

Appendix 7: Contacts

Appendix: 8: Sample Contract

Appendix 9: Areas of Potential Native Nation Monitoring (Map 1, Sheets 1 and 2)
Focus Map - Areas of Potential Native Nation Monitoring (Map 2, Sheets 1 and 2)
Typical Road Section and Associated Definitions

Execution of this Agreement by the FHWA, the SHPO, the ACHP, the NYSDOT, and the Onondaga Nation and implementation of its terms is evidence that the FHWA has taken into account the effects of this Project on historic properties and has afforded the ACHP an opportunity to comment.

SIGNATORY:

FEDERAL HIGHWAY ADMINISTRATION

BY: _____ DATE: 5/12/2022

RICHARD J. MARQUIS, DIVISION ADMINISTRATOR, FHWA NEW YORK DIVISION

Execution of this Agreement by the FHWA, the SHPO, the ACHP, the NYSDOT, and the Onondaga Nation and implementation of its terms is evidence that the FHWA has taken into account the effects of this Project on historic properties and has afforded the ACHP an opportunity to comment.

SIGNATORY:

NEW YORK STATE HISTORIC PRESERVATION OFFICE

BY: R Daniel Mackay DATE: 5/11/2022

R. DANIEL MACKAY, DEPUTY COMMISSIONER, STATE HISTORIC PRESERVATION OFFICER

Execution of this Agreement by the FHWA, the SHPO, the ACHP, the NYSDOT, and the Onondaga Nation and implementation of its terms is evidence that the FHWA has taken into account the effects of this Project on historic properties and has afforded the ACHP an opportunity to comment.

SIGNATORY:

ADVISORY COUNCIL ON HISTORIC PRESERVATION

BY: _____ DATE: _____

REID NELSON, EXECUTIVE DIRECTOR (ACTING)

Execution of this Agreement by the FHWA, the SHPO, the ACHP, the NYSDOT, and the Onondaga Nation and implementation of its terms is evidence that the FHWA has taken into account the effects of this Project on historic properties and has afforded the ACHP an opportunity to comment.

INVITED SIGNATORY:

NEW YORK STATE DEPARTMENT OF TRANSPORTATION

BY: _____ DATE: 4-18-2022

NICOLAS CHOUBAH, CHIEF ENGINEER

Execution of this Agreement by the FHWA, the SHPO, the ACHP, the NYSDOT, and the Onondaga Nation and implementation of its terms is evidence that the FHWA has taken into account the effects of this Project on historic properties and has afforded the ACHP an opportunity to comment.

INVITED SIGNATORY:

ONONDAGA NATION

BY: Tadodaho Sidney Hill DATE: 5/11/22

PRINT NAME: Tadodaho Sidney Hill

Execution of this Agreement by the FHWA, the SHPO, the ACHP, the NYSDOT, and the Onondaga Nation and implementation of its terms is evidence that the FHWA has taken into account the effects of this Project on historic properties and has afforded the ACHP an opportunity to comment.

CONCURRING PARTY:

SYRACUSE-ONONDAGA COUNTY PLANNING AGENCY

BY: _____ DATE: 4/25/22
DAN KWASNOWSKI, DIRECTOR

BY: _____ DATE: 4/27/22
OWEN KERNEY, ASSISTANT DIRECTOR

BY: _____ DATE: _____
KATE AUWAERTER, PRESERVATION PLANNER

Execution of this Agreement by the FHWA, the SHPO, the ACHP, the NYSDOT, and the Onondaga Nation and implementation of its terms is evidence that the FHWA has taken into account the effects of this Project on historic properties and has afforded the ACHP an opportunity to comment.

CONCURRING PARTY:

SYRACUSE HOUSING AUTHORITY

BY: _____ DATE: _____
BILL SIMMONS, DIRECTOR

BY: _____ DATE: _____
CRAIG L. CORRIDERS, HOUSING PROPERTY MANAGER

Execution of this Agreement by the FHWA, the SHPO, the ACHP, the NYSDOT, and the Onondaga Nation and implementation of its terms is evidence that the FHWA has taken into account the effects of this Project on historic properties and has afforded the ACHP an opportunity to comment.

CONCURRING PARTY:

SYRACUSE METROPOLITAN TRANSPORTATION COUNCIL

BY: _____ DATE: 4/19/22
JAMES D'AGOSTINO, DIRECTOR

Execution of this Agreement by the FHWA, the SHPO, the ACHP, the NYSDOT, and the Onondaga Nation and implementation of its terms is evidence that the FHWA has taken into account the effects of this Project on historic properties and has afforded the ACHP an opportunity to comment.

CONCURRING PARTY:

TOWN OF DEWITT HISTORIAN, HISTORICAL PRESERVATION SOCIETY

BY: _____ DATE: _____
ELEANOR L. JOHNSON, TOWN OF DEWITT HISTORIAN

Execution of this Agreement by the FHWA, the SHPO, the ACHP, the NYSDOT, and the Onondaga Nation and implementation of its terms is evidence that the FHWA has taken into account the effects of this Project on historic properties and has afforded the ACHP an opportunity to comment.

CONCURRING PARTY:

PRESERVATION LEAGUE OF NEW YORK STATE

BY: _____ DATE: 4-26-2022

KATIE EGGERS COMEAU, VICE PRESIDENT FOR POLICY AND PRESERVATION

Execution of this Agreement by the FHWA, the SHPO, the ACHP, the NYSDOT, and the Onondaga Nation and implementation of its terms is evidence that the FHWA has taken into account the effects of this Project on historic properties and has afforded the ACHP an opportunity to comment.

CONCURRING PARTY:

CITY OF SYRACUSE, DEPARTMENT OF ENGINEERING

BY: Mary E. Robison DATE: 04/28/2022

MARY ROBISON, P.E., CITY ENGINEER

Execution of this Agreement by the FHWA, the SHPO, the ACHP, the NYSDOT, and the Onondaga Nation and implementation of its terms is evidence that the FHWA has taken into account the effects of this Project on historic properties and has afforded the ACHP an opportunity to comment.

CONCURRING PARTY:

DOWNTOWN COMMITTEE OF SYRACUSE

BY: _____ DATE: 4/13/22

MERIKE TREIER, EXECUTIVE DIRECTOR

Execution of this Agreement by the FHWA, the SHPO, the ACHP, the NYSDOT, and the Onondaga Nation and implementation of its terms is evidence that the FHWA has taken into account the effects of this Project on historic properties and has afforded the ACHP an opportunity to comment.

CONCURRING PARTY:

PRESERVATION ASSOCIATION OF CENTRAL NEW YORK

BY: _____ DATE: 4/26/2022

ANDREW ROBLEE, PRESIDENT

Execution of this Agreement by the FHWA, the SHPO, the ACHP, the NYSDOT, and the Onondaga Nation and implementation of its terms is evidence that the FHWA has taken into account the effects of this Project on historic properties and has afforded the ACHP an opportunity to comment.

CONCURRING PARTY:

CENTRAL NEW YORK CHAPTER OF THE AMERICAN INSTITUTE OF ARCHITECTS (AIA-CNY)

Andrew Schuster, President AIA-CNY

BY: Robert Haley Jr. DATE: 4/25/23

ROBERT HALEY

Execution of this Agreement by the FHWA, the SHPO, the ACHP, the NYSDOT, and the Onondaga Nation and implementation of its terms is evidence that the FHWA has taken into account the effects of this Project on historic properties and has afforded the ACHP an opportunity to comment.

CONCURRING PARTY:

CENTRAL NEW YORK REGIONAL PLANNING AND DEVELOPMENT BOARD

BY: _____ DATE: _____
DAVID BOTTAR, EXECUTIVE DIRECTOR

Execution of this Agreement by the FHWA, the SHPO, the ACHP, the NYSDOT, and the Onondaga Nation and implementation of its terms is evidence that the FHWA has taken into account the effects of this Project on historic properties and has afforded the ACHP an opportunity to comment.

CONCURRING PARTY:

THE ERIE CANAL MUSEUM

BY: _____ DATE: _____
NATALIE STETSON, EXECUTIVE DIRECTOR

Execution of this Agreement by the FHWA, the SHPO, the ACHP, the NYSDOT, and the Onondaga Nation and implementation of its terms is evidence that the FHWA has taken into account the effects of this Project on historic properties and has afforded the ACHP an opportunity to comment.

CONCURRING PARTY:

THE NORTHSIDE URBAN PARTNERSHIP

BY: _____ DATE: 4/18/2022
JONATHAN LINK LOGAN, DIRECTOR

Execution of this Agreement by the FHWA, the SHPO, the ACHP, the NYSDOT, and the Onondaga Nation and implementation of its terms is evidence that the FHWA has taken into account the effects of this Project on historic properties and has afforded the ACHP an opportunity to comment.

CONCURRING PARTY:

NORTHEAST HAWLEY DEVELOPMENT ASSOCIATION, INC.

BY: _____ DATE: _____
ANDREA B. WANDERSEE, EXECUTIVE DIRECTOR

Execution of this Agreement by the FHWA, the SHPO, the ACHP, the NYSDOT, and the Onondaga Nation and implementation of its terms is evidence that the FHWA has taken into account the effects of this Project on historic properties and has afforded the ACHP an opportunity to comment.

CONCURRING PARTY:

QUANTE WRIGHT

BY: _____ DATE: _____
QUANTE WRIGHT

Execution of this Agreement by the FHWA, the SHPO, the ACHP, the NYSDOT, and the Onondaga Nation and implementation of its terms is evidence that the FHWA has taken into account the effects of this Project on historic properties and has afforded the ACHP an opportunity to comment.

CONCURRING PARTY:

DOUGLAS ARMSTRONG

BY: _____ DATE: 25 April 2022

DOUGLAS ARMSTRONG, PHD, RPA

Execution of this Agreement by the FHWA, the SHPO, the ACHP, the NYSDOT, and the Onondaga Nation and implementation of its terms is evidence that the FHWA has taken into account the effects of this Project on historic properties and has afforded the ACHP an opportunity to comment.

CONCURRING PARTY:

HISTORIC OAKWOOD CEMETERY PRESERVATION ASSOCIATION

BY: _____ DATE: _____
JOHN AUWAERTER, BOARD MEMBER

Execution of this Agreement by the FHWA, the SHPO, the ACHP, the NYSDOT, and the Onondaga Nation and implementation of its terms is evidence that the FHWA has taken into account the effects of this Project on historic properties and has afforded the ACHP an opportunity to comment.

CONCURRING PARTY:

HOUSING VISIONS

BY: _____ DATE: 3/30/22

Benjamin Lockwood **President & CEO** MENT RELATIONS

APPENDIX 1:

Area of Potential Effects

09.10.2020

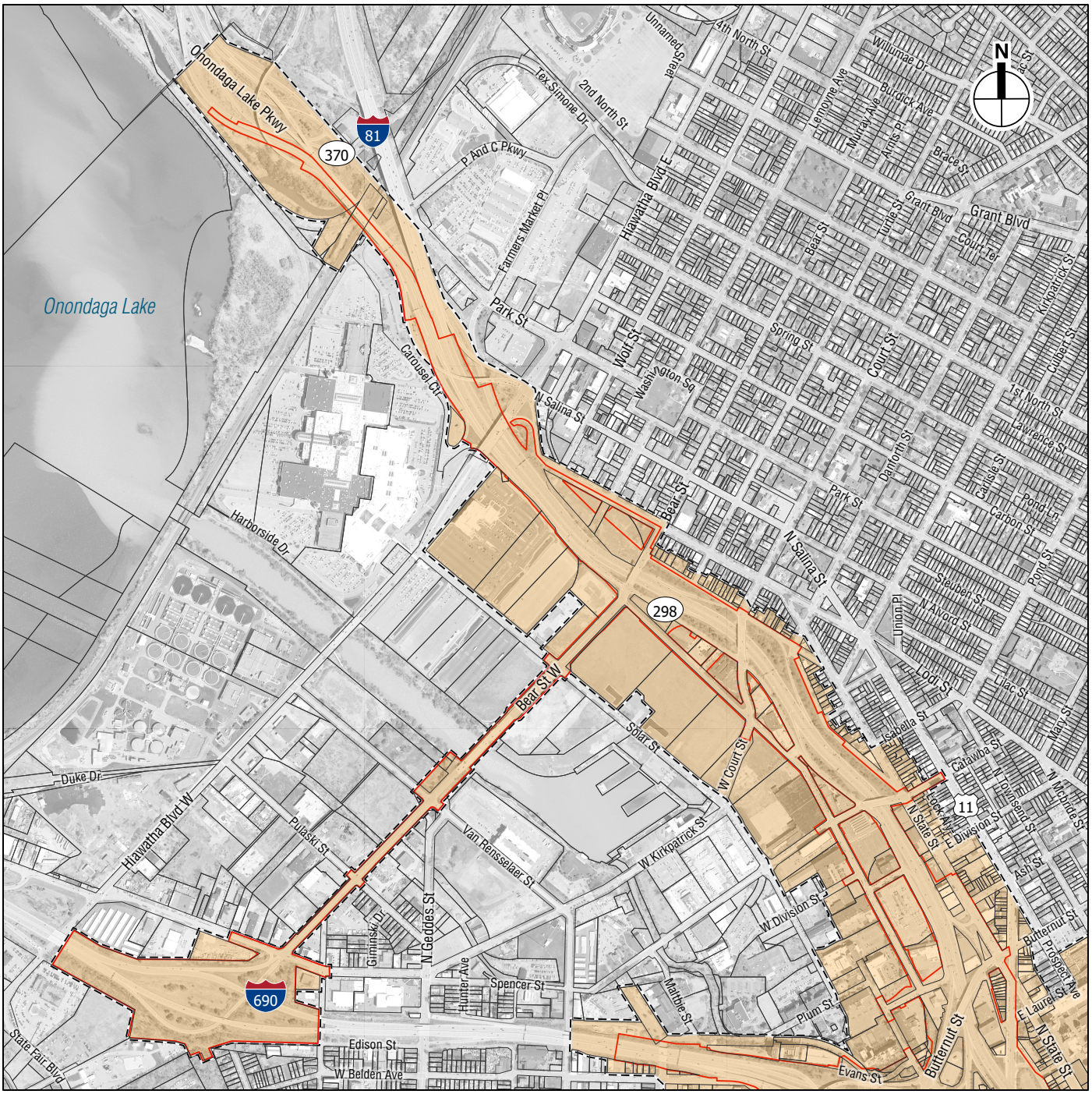

0 1 Mile

Area of Potential Effects (APE)

Limits of Disturbance (LOD), Combined Alternatives

Tax Parcels

Area of Potential Effects (APE) - Central Study Area

I-81 Viaduct Project

Figure 1a

09.10.2020

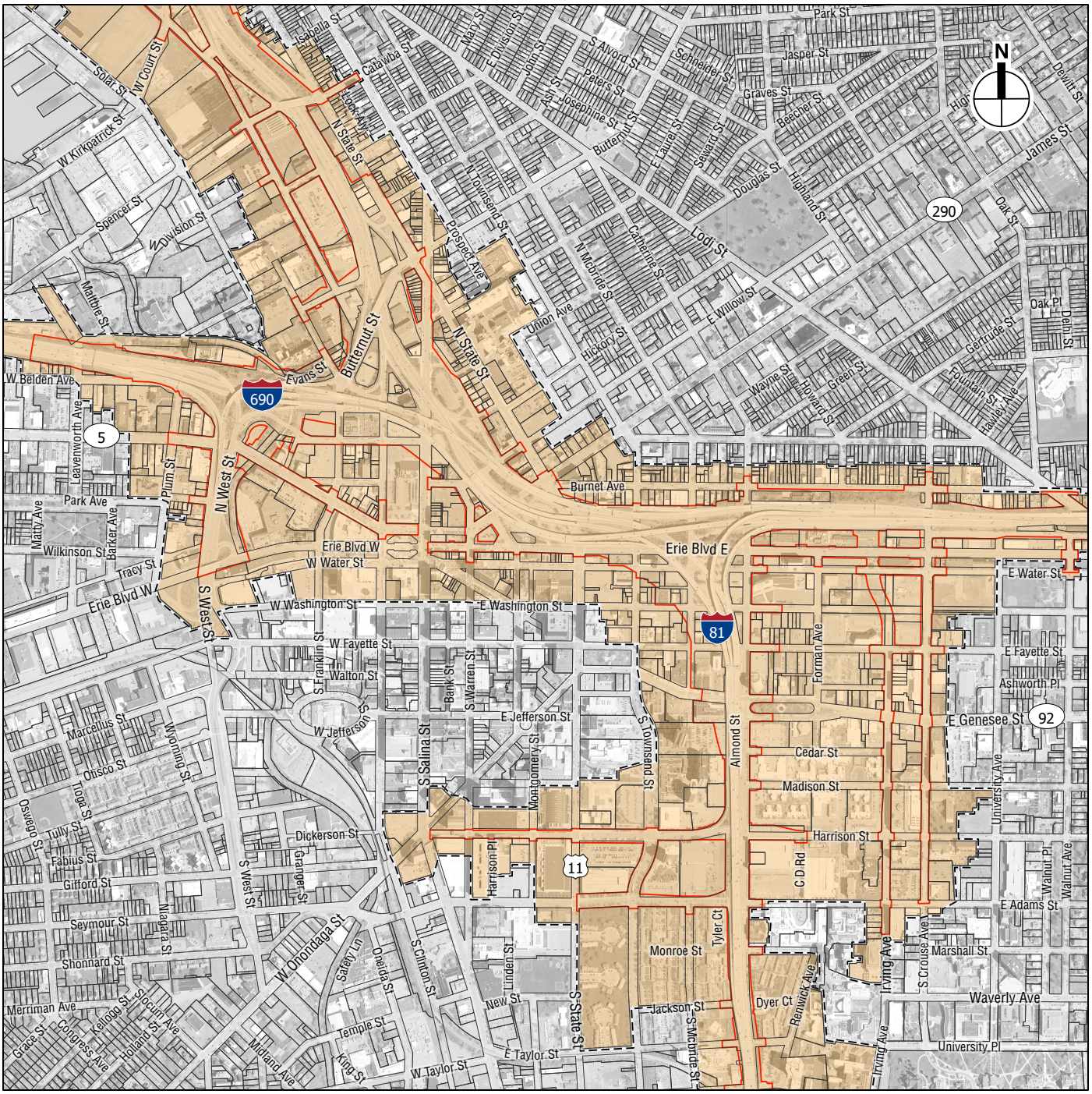

0 1 Mile

Area of Potential Effects (APE)

Limits of Disturbance (LOD), Combined Alternatives

Tax Parcels

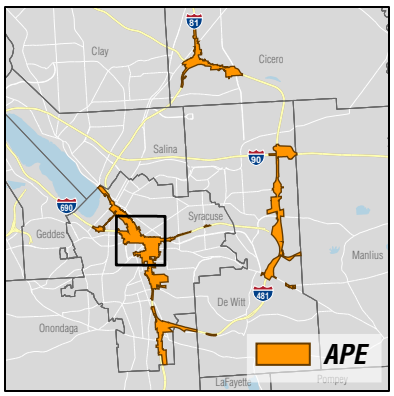

Area of Potential Effects (APE) - Central Study Area

I-81 Viaduct Project

Figure 1b

09.10.2020

0 1 Mile

Area of Potential Effects (APE)

Limits of Disturbance (LOD), Combined Alternatives

Tax Parcels

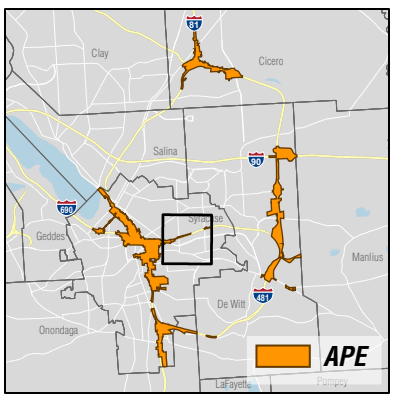

Area of Potential Effects (APE) - Central Study Area

I-81 Viaduct Project

Figure 1c

09.10.2020

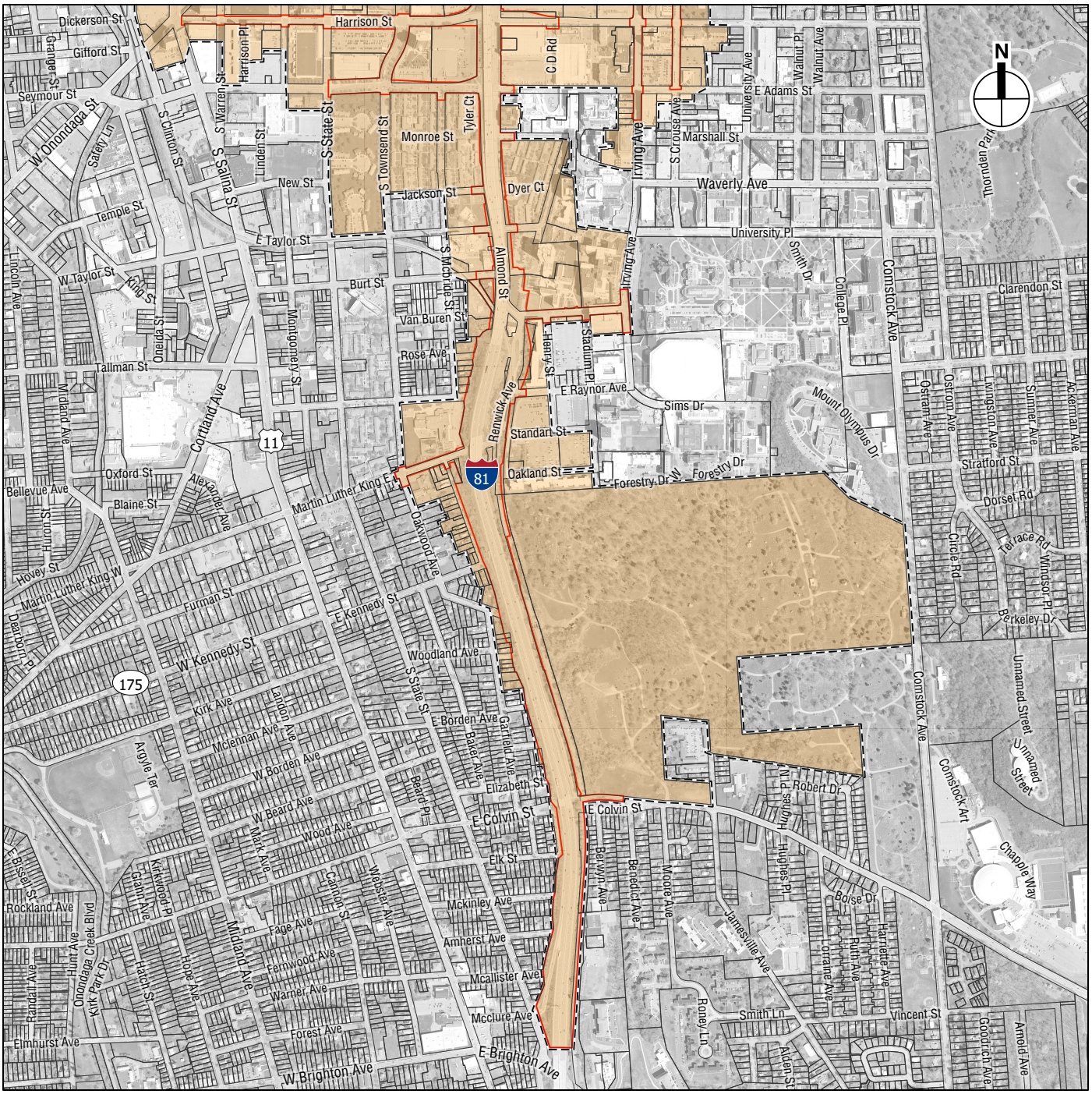

0 1 Mile

Area of Potential Effects (APE)

Limits of Disturbance (LOD), Combined Alternatives

Tax Parcels

Area of Potential Effects (APE) - Central Study Area

I-81 Viaduct Project

Figure 1d

09.10.2020

0 1 Mile

Area of Potential Effects (APE)

Limits of Disturbance (LOD), Combined Alternatives

Tax Parcels

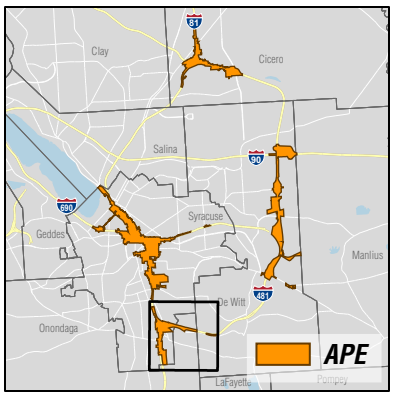

Area of Potential Effects (APE) - South Study Area

I-81 Viaduct Project

Figure 1e

09.10.2020

0 1 Mile

Area of Potential Effects (APE)

Limits of Disturbance (LOD), Combined Alternatives

Tax Parcels

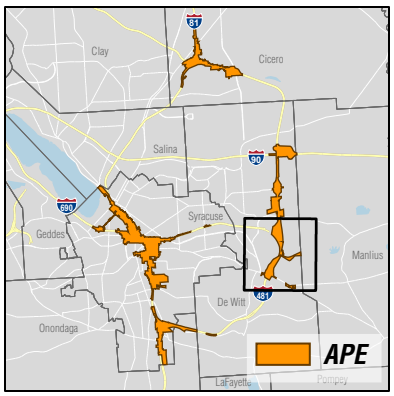

Area of Potential Effects (APE) - East Study Area

I-81 Viaduct Project

Figure 1f

09.10.2020

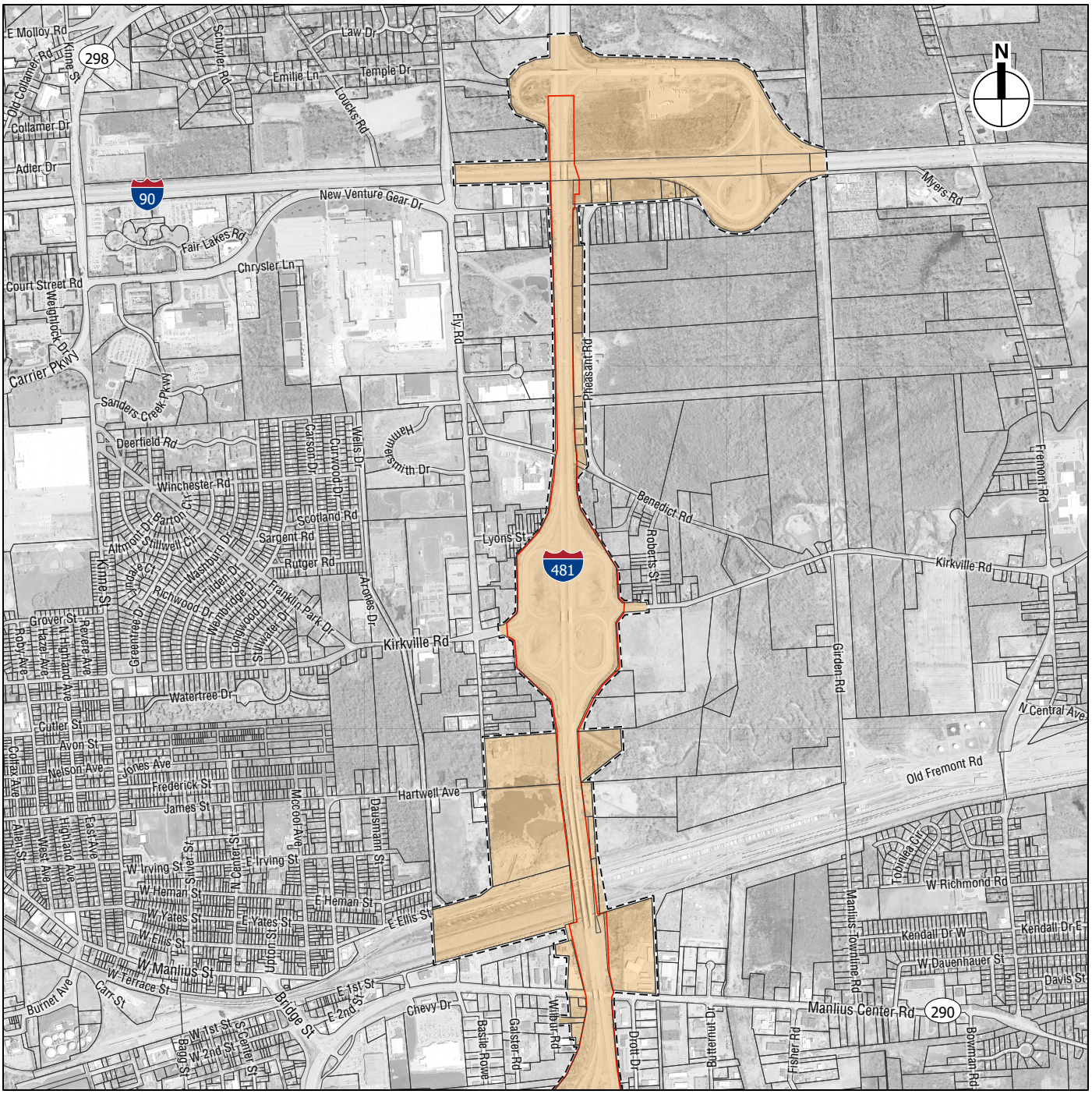

0 1 Mile

Area of Potential Effects (APE)

Limits of Disturbance (LOD), Combined Alternatives

Tax Parcels

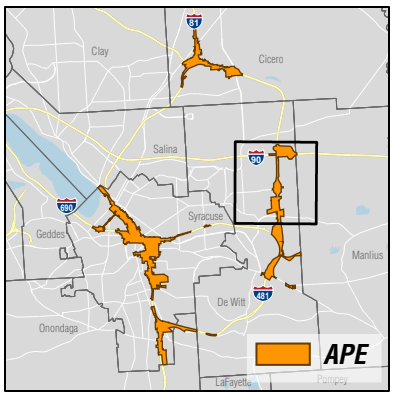

Area of Potential Effects (APE) - East Study Area

I-81 Viaduct Project

Figure 1g

09.10.2020

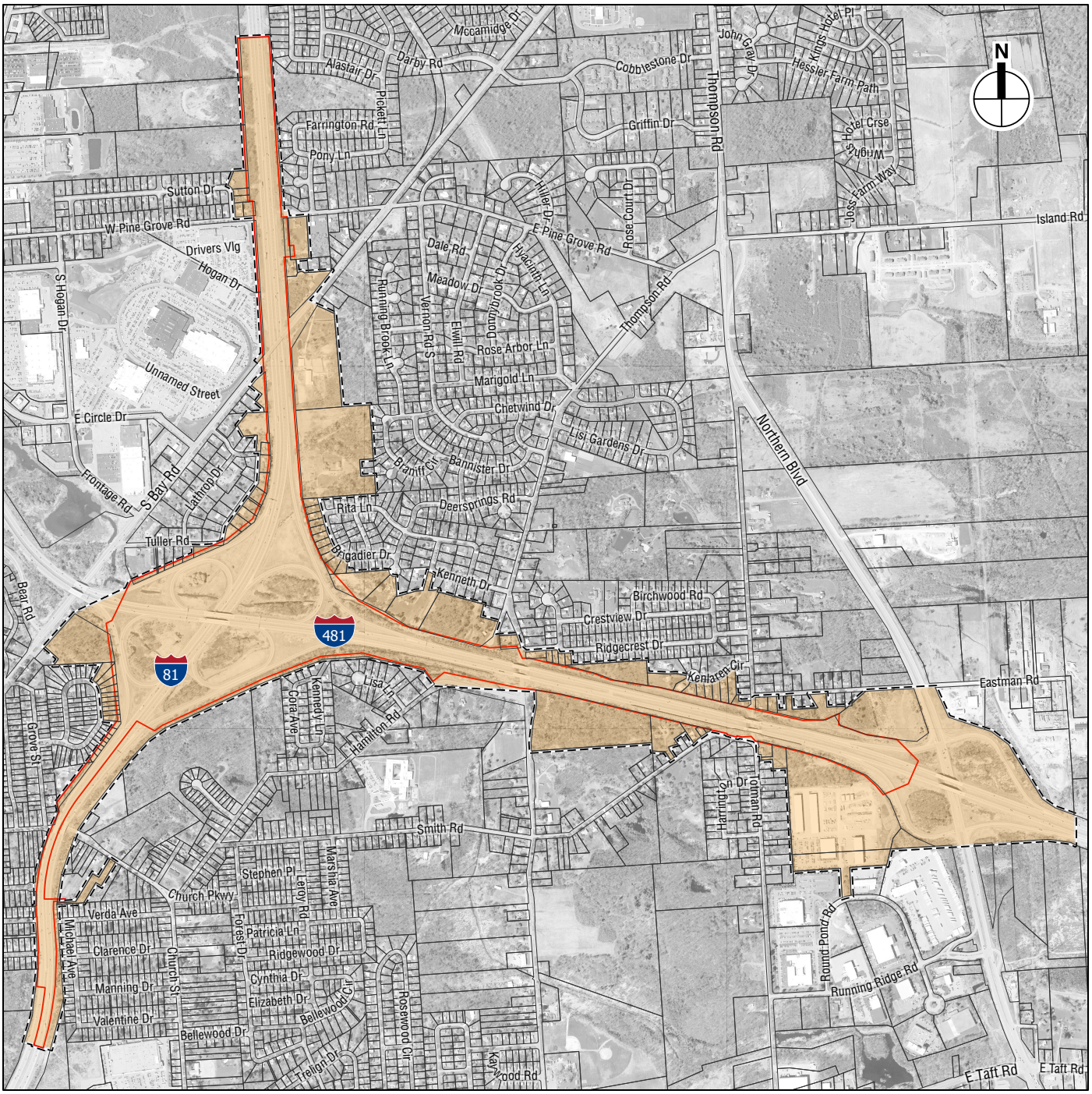

0 1 Mile

Area of Potential Effects (APE)

Limits of Disturbance (LOD), Combined Alternatives

Tax Parcels

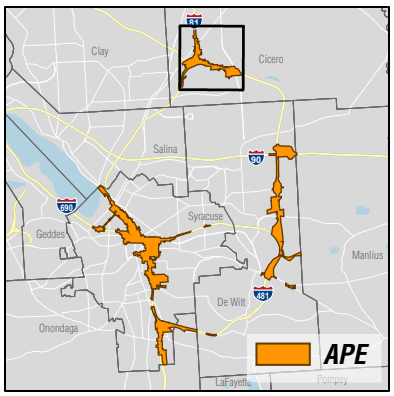

Area of Potential Effects (APE) - North Study Area

I-81 Viaduct Project

Figure 1h

APPENDIX 2:

Phase IB Archaeological Survey Work Plan: Plan for Phase IB Archaeological Survey and Archaeological Monitoring during Construction Including Data Recovery, October 2017

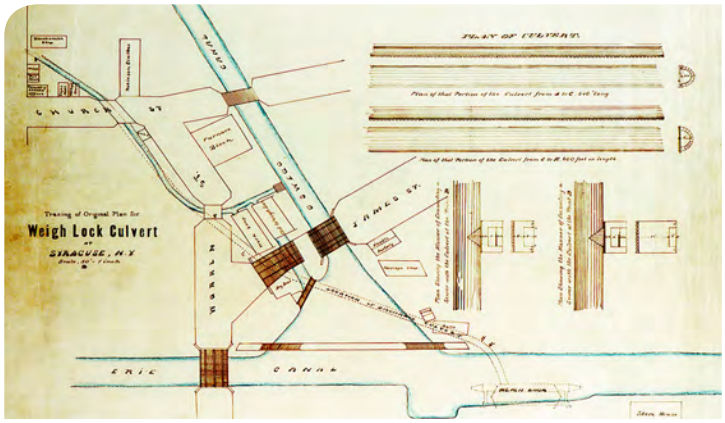

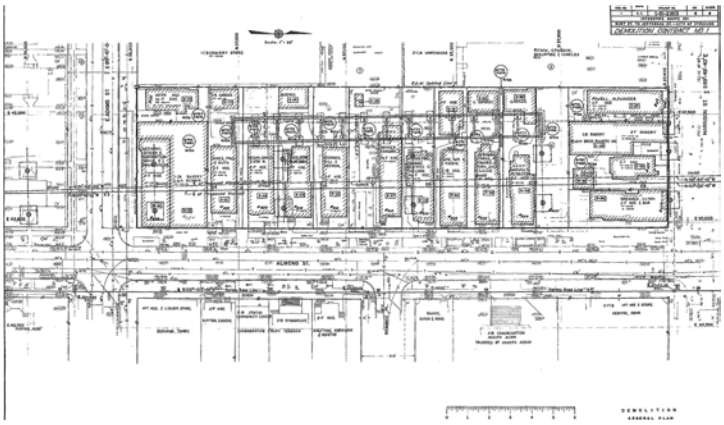

Phase 1B Archaeological Survey Work Plan

I-81 Viaduct Project

City of Syracuse and Towns of Salina, Cicero, and Dewitt, Onondaga County, New York

Prepared for:

NEW YORK STATE OF OPPORTUNITY. Department of Transportation

U.S. Department of Transportation
Federal Highway Administration

Prepared by:

Environmental Design & Research,
Landscape Architecture, Engineering & Environmental Services, D.P.C.

217 Montgomery Street, Suite 1000
Syracuse, New York 13202
P: 315.471.0688
F: 315.471.1061

www.edrdpc.com

October 2017

Plan for Phase IB Archaeological Survey and Archaeological Monitoring During Construction Including Data Recovery

I-81 Viaduct Project

City of Syracuse and Towns of Salina, Cicero, and Dewitt, Onondaga County, New York

NYSDOT PIN 3501.60

Prepared for:

NEW YORK STATE OF OPPORTUNITY. Department of Transportation

And

U. S. Department of Transportation
Federal Highway Administration

Prepared by:

Environmental Design & Research,
Landscape Architecture, Engineering & Environmental Services, D.P.C.
217 Montgomery Street, Suite 1000
Syracuse, New York 13202
P: 315.471.0688
F: 315.471.1061
www.edrdpc.com

October 2017

MANAGEMENT SUMMARY

NYSDOT PIN:	3501.60
NYSORHP Project Review:	16PR06314
NYSDOT Project Type:	Highway demolition, reconstruction, and/or replacement
Cultural Resources Survey Type:	Plan for Phase IB Archaeological Survey and Archaeological Monitoring During Construction Including Data Recovery
Location Information:	City of Syracuse and Towns of Salina, Cicero, and Dewitt Onondaga County
Survey Area:	
Project Description:	Reconstruction of I-81 and adjacent roadways in Onondaga County, New York. The Project is considering 2 alternatives – a Viaduct Alternative and Community Grid Alternative, described herein.
:	Area of Potential Effect (APE) for Direct Effects totals 458.9 acres
USGS 7.5-Minute Quadrangle Map:	Syracuse East, Syracuse West, Jamesville, Cicero and South Onondaga
Authors/Institution:	Patrick J. Heaton, RPA and Nicholas Freeland, RPA *Environmental Design & Research, Landscape Architecture, Engineering, & Environmental Services, D.P.C. (EDR), Syracuse, New York*
Date:	October 2017
Sponsor:	New York State Department of Transportation Federal Highway Administration

TABLE OF CONTENTS

1.0 INTRODUCTION 1
1.1 Area of Potential Effect 1
1.2 Vertical Limits of Disturbance 2
2.0 ARCHAEOLOGICAL SENSITIVITY 3
2.1 Summary of the Phase IA Archaeological Sensitivity Assessment 3
2.2 Pre-Contact/Native American Archaeological Sensitivity within the APE 5
2.3 Historic-Period Archaeological Sensitivity within the APE 6
2.4 Potential for Human Remains within the APE 8
3.0 PROPOSED PHASE IB ARCHAEOLOGICAL SURVEY METHODOLOGIES 9
3.1 Phase IB Archaeological Field Methods 10
3.1.1 Shovel Testing 12
3.1.2 Machine-Aided Archaeological Testing 13
3.1.3 Archaeological Monitoring during Construction 16
3.2 Laboratory Methods 18
3.3 Phase IB Archaeological Survey Report 18
4.0 PLAN FOR ARCHAEOLOGICAL MONITORING DURING CONSTRUCTION 20
4.1 Plan for Archaeological Monitoring During Construction 20
4.1.1 Initial Inspection and Investigation of Potential Cultural Material 20
4.1.2 Additional Archaeological Investigations to Determine NR Eligibility 23
4.1.3 Implementation of Data Recovery Procedures 23
4.2 Contractor Assistance and Consideration 25
5.0 HUMAN REMAINS AND FUNERARY OBJECTS PROTOCOL 27
6.0 REFERENCES 28

LIST OF FIGURES

Figure 1. Area of Potential Effect for Direct Effects
Figure 2. Anticipated Depth of Soil Disturbance (Estimated)
Figure 3. Archaeological Sensitivity
Figure 4. Areas of Potential Sensitivity for Human Remains
Figure 5. Phase IB Archaeological Methods

LIST OF APPENDICES

Appendix A. NYSOPRHP Human Remains Protocol and NAGPRA Guidance

Appendix B. Haudenosaunee Protocol for Handling of Human Remains

Appendix C. NYSDOT Procedures in the Event of the Inadvertent Discovery of Human Remains During Construction

Appendix D. Project Contacts

1.0 INTRODUCTION

This *Plan for Phase IB Archaeological Survey and Archaeological Monitoring During Construction Including Data Recovery* (or Phase IB Archaeological Work Plan) for the I-81 Viaduct Project (the Project) was developed and prepared by Environmental Design & Research, Landscape Architecture, Engineering, & Environmental Services, D.P.C. (EDR) on behalf of the New York State Department of Transportation (NYSDOT) in coordination with the Federal Highway Administration (FHWA), and in consultation with the New York State Historic Preservation Office (SHPO) and the Onondaga Nation. The I-81 Viaduct Project is located in the City of Syracuse and Towns of Salina, Cicero, and Dewitt, in Onondaga County, New York. This document presents a plan for Phase IB archaeological investigations and construction monitoring to be accomplished in advance of and concurrent with the construction of the Project.

The Phase IB Archaeological Work Plan describes methodologies for field investigations to identify archaeological resources within the Project's area of potential effects (APE), in accordance with 36 CFR Part 800.4(b). All fieldwork will be conducted in accordance with the New York Archaeological Council's (NYAC's) *Standards for Cultural Resources Investigations and the Curation of Archaeological Collections in New York* State (NYAC, 1994), the New York State Education Department's (NYSED's) *Work Scope Specifications for Cultural Resource Investigations on New York State Department of Transportation Projects* (NYSED, 2004), and the *Secretary of the Interior's Standards and Guidelines for Archaeology and Historic Preservation*. The proposed work plan presented herein was prepared by archaeologists who satisfy the qualifications criteria per the Secretary of the Interior's Standards (36 CFR Part 61). Archaeological monitoring will also be conducted in accordance with NYAC's *Guidelines for the Use of Archaeological Monitoring as an Alternative to Other Field Techniques* (NYAC, 2002). All reports prepared in association with the Phase IB archaeological survey and/or archaeological monitoring will be consistent with the format and documentation standards of the NYSED Work Scope and the SHPO's *Phase I Archaeological Report Format Requirements* (2005).

1.1 Area of Potential Effect

The I-81 Viaduct Project includes the proposed reconstruction or replacement of the elevated portions of Interstate 81 (the I-81 Viaduct) through the City of Syracuse, in Onondaga County, New York. Two alternatives are currently being considered: the Viaduct Alternative and the Community Grid Alternative (Figure 1, Sheets 1 and 2). The Area of Potential Effect (APE) for the two project alternatives is described in detail in the Phase IA Archaeological Sensitivity Assessment (EDR, 2016) and the Draft Environmental Impact Statement (Draft EIS) (FHWA and NYSDOT, 2016). As defined in 36 CFR Part 800.16(d), the APE represents the geographical area within which the project "may directly or indirectly cause alterations in the character or use of historic properties, if any such properties exist," and defines the area in which identification efforts will occur for architectural and archaeological properties. The APE for the two Project alternatives carried forward for study in the Draft EIS was defined in consultation with the SHPO.

The project APE incorporates potential direct and indirect effects associated with the two build alternatives under consideration. Within the APE, a smaller area representing potential direct effects from physical alterations or ground disturbance associated with the project has been identified. This area, defined herein as the APE for Direct Effects, represents the limits of disturbance (LOD) of the two build alternatives and includes the area in which the proposed build alternatives have the potential to result in direct effects to archaeological resources (see Figure 1, Sheets 1 and 2). Changes to Project plans prior to or during construction would impact the APE which would necessarily impact the Phase IB archaeological survey and construction monitoring work plan. Therefore, any changes to Project plans need to be communicated to the archaeological consultant as quickly as possible.

1.2 Vertical Limits of Disturbance

Subsequent to completing the Phase IA report, the project design for both alternatives has continued to advance and additional detail is now available regarding the potential depth of soil disturbance for proposed work under each alternative. The anticipated depth of soil disturbance for each alternative based on preliminary/conceptual design information is shown on Figure 2 (Sheets 1 and 2). The potential depth of soil disturbance shown on Figure 2 is based on estimates by the design engineering team, based on currently available information. All areas within the APE for Direct Effects were first designated as having the potential for disturbance to a minimum depth of 0 to 2 feet (0 to 61 cm) below the ground surface. Using the preliminary project plans for each alternative, the design engineer delineated approximated areas within the APE for Direct Effects of each project Alternative where planned construction and/or demolition was expected to require soil disturbance beyond a depth of 2 feet (61 cm) to facilitate construction and/or relocation of underground utilities, sewers, bridge supports, and new highway right-of-way. In each of these areas, where possible, the estimated depth of anticipated disturbance was delineated. Anticipated depths of disturbance were not mapped for those areas characterized by previous cut and fill disturbance from the original construction of existing highway structures and embankments because, as described in the Phase IA report, the vertical depth of disturbance associated with the original highway construction was extensive and the proposed depth of construction is not expected to extend beyond the depth of previously disturbed soils into potential underlying natural subsoils (see EDR, 2016: Figures 2.4.6-13 and 2.6.3-1). Therefore, there is no possibility of intact buried archaeological materials existing at the locations mapped as “Cut and Fill Highway and Embankment Areas” on Figures 2 and 4.

2.0 ARCHAEOLOGICAL SENSITIVITY

2.1 Summary of the Phase IA Archaeological Sensitivity Assessment

A Phase IA Archaeological Sensitivity Assessment for the APE was completed in September 2016 (EDR, 2016). The purpose of the Phase IA Archaeological Sensitivity Assessment was to determine whether previously identified archaeological resources are located within the APE, and to evaluate the potential for previously unidentified archaeological resources to be located within the APE. The Phase IA study was conducted in accordance with established standards, including the NYAC *Standards for Cultural Resources Investigations and the Curation of Archaeological Collections in New York State* (NYAC, 1994), the New York State Education Department's (NYSED) *Cultural Resources Survey Program Work Scope Specifications for Cultural Resources Investigations on New York State Department of Transportation Projects* (NYSED, 2004), and the SHPO's *Phase I Archaeological Report Format Requirements* (NYSOPRHP, 2005).

The results of the archaeological sensitivity assessment presented in the Phase IA report are summarized below and depicted in Figure 3, Sheets 1 and 2, in addition to the supplemental analysis of areas with the potential to contain Native American human remains (described below). The Phase IA archaeological sensitivity assessment for the Project (EDR, 2016) was submitted by NYSDOT and FHWA to SHPO for review in September 2016. The Phase IA report (EDR, 2016:234) concluded: "…due to the extent of prior ground disturbance, the potential for archaeological sites to be present within the APE for Direct Effects is highly variable…The Phase1B archaeological survey will include different field methodologies depending on the existing conditions present within various portions of the APE for Direct Effects." The Phase IA report concluded that a Phase IB archaeological survey would be needed to determine if intact archaeological resources are present within the APE for Direct Effects, and further recommended the development of an archaeological Work Plan to identify the locations and field methodologies for the Phase IB survey.

The Phase IA Archaeological Sensitivity Assessment was completed in consultation with the SHPO and the Onondaga Nation, and the report was provided for their review in advance of developing a scope of work for Phase IB archaeological survey. The SHPO concurred with the recommendation for Phase IB testing in a letter dated September 22, 2016 in which it stated: "we concur with your agency's recommendation to FHWA. We have no issues or concerns with the Phase IB archaeology testing and reporting recommendations provided on pages 234 and 235 of the Phase IA Report" (Bonafide, 2016).

On October 7, 2016, FHWA, NYSDOT, SHPO, and the Onondaga Nation met to discuss the Phase IA Archaeological Sensitivity Assessment. Following this meeting, in a letter to the NYSDOT dated November 14, 2016, the Onondaga Nation provided comments on the Phase IA report. Additional comments were provided in a March 1, 2017 letter from

the Onondaga Nation to the FHWA, based on review of the pre-Draft EIS. Comments provided by FHWA and the Onondaga Nation during the October 7, 2016 meeting and in subsequent correspondence included requests for additional information regarding the vertical APE, mapping, proposed methods of investigation, and procedures in the event that human remains are encountered during construction. Following the completion of the Phase IA report (EDR, 2016), the Onondaga Nation requested that the historic alignment of Onondaga Creek be more clearly delineated, due to the elevated sensitivity for human burials in proximity to the historic watercourse. Information prepared in response to these requests has been included in this Phase IB Work Plan and are discussed in more detail below in Section 2.4 of this report.

The Phase IA report relies on background data and historical information specific to the project setting to assess the likelihood that archaeological resources are located in the APE. This includes detailed historic context narratives for the long period of Pre-Contact Native American settlement and use of the APE and vicinity, as well as descriptions of the settlement and development of the APE during the Historic Period. This site-specific historic context provides a foundation for the identification and evaluation of potential archaeological resources in accordance with the requirements of Section 106.

The archaeological sensitivity assessment in the Phase IA report evaluates the potential for archaeological deposits to be located within the APE based on analysis of the following information:

- The environmental setting, geology, and soils within the APE and vicinity;
- Existing conditions within the APE, based on reconnaissance-level site visits and illustrated with representative photographs;
- The locations of previously identified archaeological sites located within and adjacent to the APE;
- The results of previous archaeological surveys and investigations within and adjacent to the APE;
- Historical research and the results of historic map review; and,

There are 14 previously recorded archaeological sites within or adjacent to the APE for Direct Effects. These include eight historic-period sites and six Pre-Contact Native American sites. The Historic Period sites consist of six historic structural remains (these include intact foundations and middens/debris scatters associated with historically map-documented structures [including the Syracuse Armory]) and one Erie Canal boat basin. The Pre-Contact Native American sites consist of two villages/hamlets, two artifact scatters/traces of occupation, one camp site, and one site described as a “camp or hamlet” (Parker, 1922:647). Therefore, Historic Period archaeological sites expected to be encountered during the Phase IB survey include artifact scatters, structural remains including foundations and ancillary features such as privies and wells, and canal-related features including canal prisms, boat basins, and locks. To account for this, the Phase 1B archaeological survey strategy targets the mapped alignment of the Erie and Oswego Canals for

machine-aided testing and construction monitoring and targets historically map-documented structure locations for machine-aided testing. Pre-Contact Native American archaeological sites could range from small camps and scattered artifacts to major village sites and it is also anticipated that Pre-Contact human remains could potentially be encountered. Smaller camps and isolated artifacts could be located in any previously undisturbed portions of the APE but larger camps and village sites are likely to be located near Onondaga Lake or the former course of Onondaga Creek. Therefore, Phase IB archaeological survey will target previously undisturbed areas with shovel testing and the former alignment of Onondaga Creek (based on georeferenced historic maps) with machine-aided testing. The extent and nature of proposed Phase IB archaeological survey and archaeological monitoring are discussed in detail below in Sections 3 and 4 of this report.

The Phase IA report also includes documentation of the horizontal and vertical extent of prior ground disturbance within the APE, which affects the integrity of potential archaeological resources. The next steps in the phased approach to the identification of archaeological resources are to review the proposed locations of ground disturbance for the project and identify potential Phase IB archaeological testing methods (such as shovel testing, machine-aided excavation, and/or archaeological monitoring) that will be used in archaeologically sensitive areas where the proposed depth of ground disturbance exceeds the depth of existing ground disturbance.

The APE is primarily within a very developed urban area with a complicated history of prior ground disturbance that affects the integrity of potential archaeological deposits. Sources of previous ground disturbance within the APE for Direct Effects include land filling activities associated with nineteenth-century urban development in the City of Syracuse; demolition and construction associated with mid-twentieth century highway construction; disturbance associated with construction, expansion, or modification of buildings; areas of cut and fill associated with road and highway construction; and installation of underground utilities. The Phase IA report documents the extent of previous ground disturbance within the APE. This analysis includes consideration of mapped soils, buried utilities, demolished structures (as determined by geo-referencing historic maps and NYSDOT demolition/construction plans), GIS analysis of 955 soil borings to estimate depth of fill/disturbed soils within the APE, and identification of highway cut and fill embankment areas based on review of NYSDOT demolition and construction plans, aerial imagery (including oblique views and historical imagery), and field reconnaissance/confirmation.

2.2 Pre-Contact/Native American Archaeological Sensitivity within the APE

Potential Pre-Contact Native American archaeological sites within the APE would necessarily pre-date the significant filling and engineering of the landscape that took place as part of the development of the City of Syracuse throughout the nineteenth and twentieth centuries. Therefore, potential Native American archaeological sites are anticipated to be located only in areas with undisturbed soils. As described in the Phase IA report, approximately 19.1 acres within the

APE for Direct Effects are undisturbed, or disturbance cannot be documented, and therefore potentially sensitive for Pre-Contact Native American archaeological resources.

Prehistoric Native American site types that could be expected to occur within the APE include:

- Small campsites dating to the Paleoindian, Early Archaic, and/or Middle Archaic Periods. These sites could be expected to contain primarily chipped stone tools and debitage with potentially some bone or ivory tools. Features could include hearths and post-molds.
- Large residential campsites dating to the Late Archaic, Early Woodland, and/or Middle Woodland Periods. These sites could be expected to include large quantities of chipped stone tools and debitage, ground stone tools and net weights, bone tools, ceramic vessels and vessel fragments, steatite vessels and vessel fragments, ceramic and bone decorative items, and exotic goods such as marine shells and copper. Features could include hearths, post-molds, middens, and human burials.
- Large nucleated villages dating to the Late Woodland Period. These sites could be expected to include large quantities of chipped stone tools and debitage, ground stone tools, bone tools, ceramic vessels and vessel fragments, ceramic and bone decorative items, and exotic goods such as marine shells and copper. Features could include hearths, storage pits, post molds associated with both longhouses and palisade walls, extensive middens, and human burials.
- Small resource acquisition campsites dating to the Late Archaic, Early Woodland, Middle Woodland, and/or Late Woodland Periods. These sites could be expected to include small quantities of chipped stone tools, ground stone tools and net weights, bone tools, ceramic vessels and vessel fragments, and/or steatite vessels and vessel fragments. Features would likely be restricted to small hearths at these locations.
- Isolated artifacts such as projectile points, other tools, ceramic fragments, or lithic debitage with no associated features.
- Burial sites – the potential for Pre-Contact Native American human remains and/or burial sites to be located within the APE is discussed in Section 2.4 of this report.

2.3 Historic-Period Archaeological Sensitivity within the APE

As described in the Phase IA report, the construction of Interstates 81 and 690 through Syracuse required demolition of large portions of city neighborhoods including much of the Fifteenth Ward, which was home to the highest concentration of African-American and Jewish populations in the city (Stamps and Stamps, 2008; Ducre, 2012). It is estimated that 800-900 families were displaced by the construction of highways in the Fifteenth Ward (Knight, 2007). Areas that were demolished included 103 acres of land in four contiguous census tracts that were predominately African-American and poor. Many residences, dozens of African-American-owned businesses, and nearly all of the

African-American churches in the city were destroyed (Stamps and Stamps, 2008). It is anticipated that archaeological features and deposits associated with these residential and commercial properties, as well as archaeological features and artifacts associated with earlier nineteenth and twentieth-century occupants, are located throughout the APE for Direct Effects. Potential historic-period archaeological resources in the APE include sites and features related to the Erie and Oswego Canals; large-scale commercial, industrial, and institutional sites; residential and small-scale commercial sites; and military sites (although none of the latter are known to be located within the project limits).

As described in and shown on maps included in the Phase IA report, hundreds of former structures are depicted on historic maps within the APE for Direct Effects. These are located throughout the APE in areas that are currently characterized as previously disturbed land with fill deposits of varying depths. It is anticipated that cellars and/or foundation remains associated with demolished structures may be present within the APE for Direct Effects at varying depths below the current ground surface (depending on local conditions). The foundations or structural remains unto themselves are unlikely to be considered archaeologically or historically significant, in large part because the location, dimensions, and arrangement of those buildings can be well understood based on review of historic cartographic sources and archaeological data is unlikely to contribute significant new information. Therefore, although these structural (foundation) remains are potentially ubiquitous throughout the APE for Direct Effects, it is assumed that archaeological investigation of these features is unlikely to contribute significant, meaningful new information.

However, potential artifact deposits and shaft features, which include privies, wells, and cisterns, are found on many domestic and commercial properties in urban contexts and are potentially located in former yard areas adjacent to the former locations of map-documented structures. In addition to their primary functions, these features were used as disposal pits for household refuse both during and at the end of their use life (Wheeler, 2000). These features are in general robustly constructed with wood, brick, and stone, and because they are underground they are likely to remain behind when the domestic or commercial structure they served is demolished or otherwise destroyed (Heck and Balicki, 1998; Roberts and Barrett, 1984; Stottman, 2000). Unlike open trash heaps which are subject to disturbance from plowing, demolition, and other actions, shaft features were typically abandoned and sealed or covered in place at the end of the feature's useful life (typically by having any remaining empty shaft space below the ground surface filled with soil, gravel, and/or debris), preventing later disturbances to the artifacts dumped inside. This enables tighter dating of sites through the glass and ceramics that are frequently recovered from them. In many instances, artifact assemblages from sealed shaft features can be associated with specific time periods and/or historically documented occupants of a given site. Therefore, shaft features have the potential to address specific historical and archaeological research questions, and therefore have the potential to be considered significant (Carnes-McNaughton and Harper, 2000; Geismar, 1993; McCarthy and Ward, 2000; Stottman, 2000; Wheeler, 2000).

2.4 Potential for Human Remains within the APE

Based on the results of the research conducted as part of the Phase IA Archaeological Sensitivity Assessment and through consultation with the Onondaga Nation, there is a potential for human remains to be located (or to be formerly located) within the APE. Historical accounts describe Native American human remains that were disturbed during nineteenth-century construction activities near Onondaga Creek and Genesee Street, which may be located within or adjacent to the APE. In addition, three historic-period cemeteries (one of these is the former site of a relocated cemetery) are located adjacent to (but outside) the APE. These include the National Register of Historic Places–(NRHP-) listed Oakwood Cemetery, the former site of Old St. Mary's Cemetery, and the House Family Cemetery. No disturbance to any of these three cemeteries is anticipated as part of the project.

As noted above, the Onondaga Nation had requested that the historic alignment of Onondaga Creek be further clarified. The Onondaga Nation noted that all areas along the historic alignment of Onondaga Creek and any additional areas near historic water sources should be considered sensitive for the potential to contain human burials. To address these concerns, the mapped extent and path of watercourses within the APE for Direct Effects were digitized and included in GIS mapping for the project. Historic maps from 1827, 1834, 1852, 1859, 1874, and 1938-1943 were digitally georeferenced using GIS software. All watercourses depicted on those maps within or immediately adjacent to the APE were traced, and buffered by 50 feet (15 meters) to account for uncertainty in the original cartographic depiction of watercourses and/or potential geo-referencing errors. The mapped former locations of these waterbodies are depicted on Figure 4 and represent areas that are considered archaeologically sensitive due to potential for buried human remains. It should be noted that the historic alignment of these water courses is also considered archaeologically sensitive for Pre-Contact Native American resources other than human burials as well as Historic Period structures.

3.0 PROPOSED PHASE IB ARCHAEOLOGICAL SURVEY METHODOLOGIES

As described in the Phase IA report (EDR, 2016) the appropriate methods for Phase IB archaeological investigations within the APE are variable and dependent on the archaeological sensitivity of different portions of the APE, the extent of prior ground disturbance, the anticipated depth of soil disturbance (see Figure 2, Sheets 1 and 2), and logistical considerations associated with the existing land uses and timing of construction activities throughout the APE. The potential need for Phase IB archaeological investigations (as described in the Phase IA report) is summarized as follows:

- Cut-and-Fill Highway and Embankment Areas: these are shown on Figures 2 and 3 and include areas within and adjacent to the APE for Direct Effects in which substantial cutting and filling of sediment has occurred related to highway construction. These include areas where the Interstate is elevated above the surrounding terrain on an earthen berm, areas where the Interstate has been excavated below the natural ground surface, areas where exit and entrance ramps are supported by concrete retaining walls or earthen berms, and other similar circumstances these areas are severely disturbed to such an extent that there is no potential for intact archaeological resources to be present. As recommended in the Phase IA report (EDR, 2016), no Phase IB archaeological investigation or further consideration of these areas (relative to the archaeological resources) is planned. It is important to note that although these areas may also be paved, they are distinct from the paved areas described below because their predominant characteristic is significant cut and/or fill disturbance. It should be noted that most of the I-81/I-481 Northern Interchange, the I-481 Eastern Improvements, and the I-81/I-481 Southern Interchange occur within Cut-and-Fill Highway and Embankment Areas.
- Unpaved areas and/or areas where significant fill deposits are not documented or anticipated: these consist of apparently undisturbed areas, primarily within or adjacent to Interstate rights-of-way (ROWs). These areas are shown on Figure 4 as areas of potential "Native American Archaeological Sensitivity." In these areas, the Phase IB survey will include a systematic program of shovel testing conducted in accordance with applicable guidelines (see Figure 5).
- Paved and/or previously disturbed areas where the proposed depth of construction activities is anticipated to be relatively minimal (i.e., within 2 feet [61 cm] of the existing ground surface): Areas where the anticipated depth of soil disturbance is anticipated to be less than 2 feet (61 cm) are shown on Figure 2. In these areas, no Phase IB archaeological investigations are planned. This would include areas where construction activities are limited to road re-surfacing or minor widening, curb replacements, streetscape improvements, and similar small-scale activities.

- Paved and/or previously disturbed areas where the proposed depth of construction activities is anticipated to be significant (i.e., greater than 2 feet [61 cm] below existing grade or otherwise involve large amounts of ground disturbance): Areas where the depth of soil disturbance is anticipated to be greater than 2 feet [61 cm] are shown on Figure 2. These will primarily consist of vacant lots, green spaces, and parking lots. In these areas, the Phase IB archaeological survey will include machine-aided archaeological investigations (see Figure 5) to determine if potentially significant archaeological deposits are present beneath fill deposits. A sampling strategy that identifies specific locations for proposed archaeological investigations is presented below in Section 3.1.2. This sampling strategy prioritizes areas where there is a potential for human remains to be present and provides for a representative assessment of the potential for the various types of historic-period archaeological resources that may be located within the APE for Direct Effects.
- Existing public roadways where the proposed depth of construction activities is anticipated to be significant (i.e., greater than 2 feet [61 cm] below existing grade or otherwise involve large amounts of ground disturbance) and where there is a potential for significant (i.e., NRHP-eligible) archaeological resources to be located (i.e., Erie and Oswego-Canal related resources): The locations of canal-related resources within the APE are shown on Figure 3. These areas are for the most part within existing roadways where machine-aided Phase IB testing would not be feasible due to the traffic stoppages it would cause. In these areas, on-site archaeological monitoring during construction is planned to document the presence or absence of potentially significant features. A monitoring protocol is included in Section 3.1.3 of this work plan.

NYSDOT will coordinate with the Onondaga Nation to provide opportunities for a Nation Representative to be present during Phase IB shovel testing, machine-aided testing, and archaeological monitoring during construction of the Project.

3.1 Phase IB Archaeological Field Methods

Proposed field methods for the Phase IB archaeological survey for the Project include shovel testing, machine-aided excavation, and archaeological monitoring during construction. Each of these methods is described below and the locations where the various methods are planned are depicted on Figure 5, Sheets 1 and 2. The Phase IB archaeological investigations will be carried out prior to the start of construction, to the extent possible, in those areas where shovel testing and machine-aided excavation are proposed.

- Shovel tests will be excavated in unpaved areas and/or areas where significant fill deposits are not documented or anticipated.

- Mechanized excavation/machine-aided archaeological testing will be employed in a representative sample of paved and/or previously disturbed areas where the proposed depth of construction activities is anticipated to be significant (i.e., greater than 2 feet [61 cm] below existing grade, or otherwise involve large amounts of ground disturbance). This work will be carried out in advance of the Project's construction activities, to the extent possible.
- Archaeological monitoring during construction will be employed in existing public roadways where the proposed depth of construction activities is anticipated to be greater than 2 feet [61 cm] below existing grade or otherwise involve large amounts of ground disturbance, and where there is a potential for significant archaeological resources to be located (i.e., Erie and Oswego-Canal related resources).

Some combination of these Phase IB field methods (further described below) will be used regardless of which Alternative (i.e., the Viaduct Alternative or the Community Grid Alternative) is selected. If any archaeological sites are identified, the site's eligibility will be assessed in terms of NRHP Criteria for Evaluation as discussed in the Phase IA report (EDR, 2016). If possible, NRHP eligibility (site significance) will be assessed based on the results of the Phase IB survey; however, Phase II investigations are typically required to fully evaluate NRHP eligibility at most archaeological sites. If, following Phase IB archaeological survey fieldwork, it is determined that Phase II investigations are necessary at one or more sites, the archaeological consultant will develop a Phase II work plan for the site or sites in questions for review by NYSDOT. It is anticipated that the preparation of a Phase II work plan will take no more than five days per site. It is also anticipated that, for most sites, Phase II investigations could be concluded within 20 days of approval of the Phase II work plan by NYSDOT.

In the event that potential human remains and/or funerary objects associated with human remains are identified during Phase IB archaeological survey, all work in the immediate vicinity will stop and the NYSDOT cultural resources lead for the Project will be contacted. All applicable procedures outlined in the SHPO Human Remains Discovery Protocol (NYSOPRHP, 2015) (Appendix A), the Haudenosaunee Human Remains Protocol (Grand Council of the Haudenosaunee, 2002) (Appendix B), and the NYSDOT *Procedures in the Event of the Inadvertent Discovery of Human Remains during Construction* (Appendix C) will be followed. If human remains or funerary objects directly associated with human remains are encountered, the appropriate treatment will be determined through consultation as described in these procedures.

In some cases, Phase III data recovery/mitigation may be appropriate at sites determined to be eligible for listing on the NRHP as a result of Phase IB survey and/or Phase II investigations. Based on consultation with the Onondaga Nation, Data Recovery would not be considered an appropriate treatment for any Native American burial site, human

resources, a Phase III data recovery plan will be developed by the archaeological consultant for review by NYSDOT, SHPO, FHWA, and also by the Onondaga Nation for sites determined to be Native American.

It is anticipated that the preparation of a Phase III data recovery plan will take no more than 15 days per site. It is also anticipated that, for most sites, Phase III data recovery could be completed within 35 days of approval of the Phase III data recovery plan by NYSDOT. For both Phase II and Phase III investigations, an end-of-field (EOF) letter will be prepared and submitted to NYSDOT within five days of the conclusion of fieldwork. The EOF will summarize the preliminary results of the investigations, make recommendations for further work (or lack thereof), and present a time frame for the completion of a full Phase II or Phase III report. It should be noted that the above time frame assumes only one archaeological site will be investigated at a time. If multiple sites need to be investigated concurrently by a single archaeological consultant, the process will likely take longer. It should be noted that the methodologies and timelines discussed above apply only to data recovery that results from Phase IB archaeological survey. Data recovery that occurs as a result of archaeological monitoring is discussed below in Section 4.0 of the work plan.

Each field methodology is discussed in detail below.

3.1.1 Shovel Testing

Areas where shovel testing is recommended are depicted on Figure 5. Shovel tests will be excavated in unpaved areas where extensive previous disturbance is not documented or anticipated and where the depth of fill deposits, if present, is unlikely to exceed the practical limits of hand excavation. Shovel tests will be excavated at 50-foot (approximately 15-meter) intervals in all unpaved/undisturbed portions of the APE for Direct Effects. Shovel tests will be approximately 12-20 inches (30-50 cm) in diameter and excavated to a depth of at least 4 inches (10 cm) into the subsoil stratum or to the limits of practical hand excavation. The locations of all shovel tests will be recorded with professional-grade GPS equipment and noted on field maps. Stratigraphic profiles, including depth, soil color, and texture, for all shovel tests will be recorded on standardized field record sheets. A complete tabulation of the stratigraphy encountered in all shovel tests will be included as an appendix to the Phase IB report.

If Pre-Contact Native American artifacts are recovered from a shovel test, archaeologists will excavate additional "radial" shovel tests per the SHPO's Phase I *Archaeological Report Format Requirements* (NYSOPRHP, 2005). The SHPO guidance indicates when Pre-Contact Native American artifacts are recovered from an isolated shovel test, up to 8 additional shovel tests should be excavated at 1- and 3-meter intervals around the original positive shovel test to determine whether the artifacts present represent an isolated find or may indicate the presence of an archaeological site. If historic artifacts are encountered in a shovel test or if shovel tests are being excavated in an area of high historic

archaeological sensitivity (e.g. near a map-documented structure), shovel tests may be excavated at 25-foot (7.5-meter) intervals.

As described previously, if potential human remains and/or funerary objects associated with human remains are identified during shovel testing, all work in the immediate vicinity will stop and the NYSDOT cultural resources lead for the Project will be contacted. All applicable procedures outlined in the SHPO Human Remains Discovery Protocol (NYSOPRHP, 2015) (Appendix A), the Haudenosaunee Human Remains Protocol (Grand Council of the Haudenosaunee, 2002) (Appendix B), and the NYSDOT *Procedures in the Event of the Inadvertent Discovery of Human Remains during Construction* (Appendix C) will be followed.

All soils excavated from shovel tests will be screened through 0.25-inch hardware cloth. The presence of clearly modern materials, such as plastic fragments, modern bottle glass fragments, or twentieth-century architectural materials, in shovel tests will be noted on field forms but these materials will not be collected for subsequent analysis. Per standard archaeological field protocol, Pre-Contact Native American and historic-period artifacts recovered from shovel tests will be placed in plastic bags labeled with standard provenience information.

As depicted on Figure 5, shovel testing is recommended at the following locations:

- Viaduct Alternative (Figure 5, Sheet 1)
    - Apparently undisturbed areas at the southern end of the Viaduct Priority Area on either side of the I-81 ROW.
- Community Grid Alternative (Figure 5, Sheet 2)
    - Apparently undisturbed area along north side of I-81/I-481 Northern Interchange Area.
    - Apparently undisturbed areas at the southern end of the Viaduct Priority Area on either side of the I-81 ROW.
    - Apparently undisturbed at the northern and southern ends of the I-81/I-481 Southern Interchange.

3.1.2 Machine-Aided Archaeological Testing

To determine whether potentially significant archaeological deposits or features are present in areas within the APE containing evidence of previous disturbance , machine-aided archaeological testing will be conducted at selected locations within the APE to provide a representative sample of potential archaeological resources. Testing is necessary in these areas due to the potential for intact archaeological deposits to exist under a layer of disturbed fill (e.g., in the case of filled structural foundations). Under the direction of a professional archaeologist (i.e., an archaeologist who satisfies the qualifications criteria per the Secretary of the Interior's Professional Qualifications Standards [36 CFR Part

61]), test trenches will be excavated within selected locations to determine if potentially significant archaeological resources are present. A backhoe will be used to remove overburden including pavement, sidewalks, gravel ballast or fill underneath pavement, and obvious artificial fill encountered in utility trenches or other contexts, and excavate test trenches in a sample of areas within the APE.

Specific areas recommended for machine-aided testing are discussed in detail below and depicted on Figure 5. These areas were selected to specifically target the historic alignment of Onondaga Creek, which, as previously noted, is sensitive for human burials, Pre-Contact Native American cultural material, and Historic Period structures. Additionally, the machine-aided testing will target the locations of Historic Period commercial facilities located along the Erie and/or Oswego Canals and Historic Period residences along Almond Street.

Based on the results of previously conducted Phase I machine-aided archaeological testing within the City of Syracuse (e.g., Panamerican Consultants, Inc., 2000; Hartgen Archaeological Associates [HAA], 2001a; HAA, 2001b; HAA 2001c; HAA, 2003a; HAA, 2003b), it is anticipated that trenches will be excavated to a depth of approximately 3.5 feet (1.1 meters) to 7 feet (2.1 meters) below the modern ground surface. However, trenches will be terminated at the proposed depth of disturbance for the Project, upon encounter of an archaeological feature (so as not to damage the feature), 10 cm (approximately 4 inches) or more into sterile natural subsoil, or at standing water.

Under guidance from archaeologists, equipment operators will remove sediment and fill in horizontal levels by stratigraphic unit. Archaeologists will screen one sample of soil from each layer removed (excluding demolition rubble or materials such as asphalt and concrete) per 7.5 meters of linear trench. All samples will be screened through 0.25-inch hardware mesh. Archaeological artifacts will be collected for further analysis and clearly modern or highly fragmented historic materials removed from fill contexts will be noted but not collected. The presence of clearly modern materials, such as plastic fragments, modern bottle glass fragments, or twentieth-century architectural materials, in trench profiles or fill deposits will be noted but these materials will not be collected for subsequent analysis. If intact natural soil horizons are exposed within a backhoe trench, excavation will proceed either mechanically, or by hand depending on the accessibility of the natural horizon. Field archaeologists will record (draw and photograph) stratigraphic profiles of trench walls (including features, if present) and plan view maps of trench bases. The corner points of all test trenches and any identified archaeological features will be recorded with survey-grade GPS equipment.

If a potential archaeological feature is exposed, all mechanized excavation will cease and archaeologists will enter the open trench to further inspect the feature[1]. In cases where the depth of the open trench exceeds 4 feet (1.2 meters),

the trench walls will be shored up by construction personnel prior to the archaeologist entering the trench, in compliance with pertinent OSHA regulations (OHSA, 2015). Prior to the installation of shoring, the stratigraphy in the upper portions of the walls, which will be obscured by shoring, will be recorded. Shoring must be installed in such a way as to minimize impacts to cultural material in the bottom of the trench. The feature will be cleaned and further exposed via hand excavation. All exposed features will be photographed, measured and described in detailed field notes. If appropriate, a sample of sediment from the feature will be collected for further analysis. If the identified archaeological feature and/or site is considered to be potentially significant (per NRHP Criteria for Evaluation), additional fieldwork (may be warranted. Additional fieldwork will be in the form of Phase II investigations for the purposes of gathering sufficient data to assess NRHP eligibility and, potentially, Phase III investigations to mitigate adverse effects on sites determined to meet the NRHP criteria for eligibility (based on the results of Phase II investigations). The need for additional phases of fieldwork will be determined through consultation with NYSDOT, the FHWA, SHPO, and the Onondaga Nation.

As described previously, if potential human remains and/or funerary objects associated with human remains are identified during machine-aided archaeological testing, all work in the immediate vicinity will stop and the NYSDOT cultural resources lead for the Project will be contacted. All applicable procedures outlined in the SHPO Human Remains Discovery Protocol (NYSOPRHP, 2015) (Appendix A), the Haudenosaunee Human Remains Protocol (Grand Council of the Haudenosaunee, 2002) (Appendix B), and the NYSDOT *Procedures in the Event of the Inadvertent Discovery of Human Remains during Construction* (Appendix C) will be followed.

Because of the logistical constraints presented by urban archaeological testing (i.e., mobilization of mechanical equipment and operators, disruption of existing use of properties, pavement removal, the potential removal of large quantities of fill), it is anticipated that any Phase II/III archaeological work that is required will be conducted immediately following the determination that identified archaeological features warrant further investigation for the purpose of an eligibility determination or data recovery.

At each location selected for archaeological testing, at least one backhoe trench will be excavated under the supervision of a professional archaeologist following the methodology proposed above. Based on the methods employed during previously conducted Phase I machine-aided archaeological testing within the City of Syracuse (e.g., Panamerican Consultants, Inc., 2000; HAA, 2001a; HAA, 2001b; HAA 2001c; HAA, 2003a; HAA, 2003b), and the scope of the current Project, it is anticipated that backhoe trenches will likely range in size from approximately 6 feet (1.2 meters) wide by approximately 9 feet (1.8 meters) long to approximately 10 feet (3.1 meters) wide by up to 50 feet (15 meters) long; however, they may be larger or smaller as conditions dictate. Machine-aided Phase IB archaeological testing is recommended at the following locations (same for both alternatives) (see Figure 5):

- Between 5 and 7 former residential/commercial lots along Almond Street, in areas currently characterized by open lots and/or parking lots (see Figure 5). Testing locations will prioritize the areas near former rear lot lines to determine if shaft features or other potentially significant archaeological features are present.
- Between 3 and 5 former residential/commercial lots on the north side of Erie Boulevard between Townsend Street and Oswego Boulevard, in areas currently characterized by open lots and/or parking lots – historically, these lots were the locations of commercial facilities located along the Erie and/or Oswego Canals (see Figure 5). Testing locations will prioritize the areas near former rear lot lines to determine if shaft features or other potentially significant archaeological features are present.
- Up to 3 locations along the historic alignment of Onondaga Creek, in areas currently characterized by open lots and/or parking lots. The purpose of this testing is to determine if potential Native American human remains (see Section 2.4 and Figure 4 of this work plan), as well as any archaeological resources, are present in this area.

The schedule and timing of the Phase IB archaeological field investigations, particularly in areas where the removal of pavement and other machine-aided testing will be necessary, will be coordinated to minimize multiple episodes of soil disturbance and disruption of existing land uses. Maximum efficiency will be achieved if machine-aided testing is undertaken immediately prior to the initiation of project construction. This way, areas disturbed by machine-aided testing will not need to be restored to their prior state because they will be immediately thereafter impacted by project construction.

3.1.3 Archaeological Monitoring during Construction

Archaeological monitoring during construction will be restricted to those areas where removal of pavement in advance of construction is not feasible (such as within active roadways). Archaeological monitoring will be conducted by qualified professional archaeologists who will observe all potential earth-disturbing construction activities associated within the areas recommended for monitoring (see Figure 5), which include:

- Viaduct Alternative (see Figure 5, Sheet 1)
  - Locations within the Viaduct Priority Area where soil disturbance greater than approximately 2 feet (61 cm) below the modern ground surface is proposed along streets overlapping with mapped alignments of the Enlarged Erie or Oswego Canals (see Figure 3, Sheet 2; and Figure 5, Sheet 2).
  - Locations within the Viaduct Priority Area where disturbance greater than approximately 2 feet (61 cm) below the current ground surface is proposed within existing roadways in areas adjacent to the former locations of waterbodies (and therefore sensitive for Native American human remains and other Pre-Contact resources; see Figure 4, Sheet 1; and Figure 5, Sheet 1).

- Community Grid Alternative (see Figure 5, Sheet 2)
    - Locations within the Viaduct Priority Area where soil disturbance greater than approximately 2 feet (61 cm) below the modern ground surface is proposed along streets overlapping with mapped alignments of the Enlarged Erie or Oswego Canals (see Figure 3, Sheet 2 and Figure 5, Sheet 2).
    - Locations within the Viaduct Priority Area where disturbance greater than approximately 2 feet (61 cm) below the current ground surface is proposed within existing roadways in areas adjacent to the former locations of waterbodies (and therefore sensitive for human remains; see Figure 4, Sheet 2 and Figure 5, Sheet 2).
    - Locations within the I-81/I-481 Southern Interchange where disturbance greater than approximately 2 feet (61 cm) below the current ground surface is proposed within existing roadways in areas adjacent to the former locations of waterbodies (and therefore sensitive for human remains; see Figure 4, Sheet 2 and Figure 5, Sheet 2).
    - Locations within the I-481 Eastern Improvements area that are adjacent to the former locations of waterbodies (and therefore sensitive for human remains). Proposed construction in these areas will be limited to installing footers for piers for an elevated highway in areas currently characterized by wetlands. Because of the wetland character of these areas, the potential for human remains is considered highly unlikely and archaeological testing in advance of construction is not considered feasible.

During construction monitoring, on-site archaeologists will have full access to the construction site and full Stop Work Authority. Archaeologists will inspect exposed soils throughout the course of excavation/construction and may temporarily stop work at times to further investigate exposed artifacts, foundations, soil stains, or other indications of potentially significant cultural resources. Investigation may consist of: visual inspection of exposed materials and/or trench walls, photography, hand excavation with a shovel and/or trowel, collection of artifacts and/or soil samples, and screening of excavated back dirt. It is assumed that the construction contractor will assist the archaeological consultant in maintaining safety standards (as necessary) during inspection (e.g., shoring up or grading trench walls to meet Occupational Health and Safety Administration standards). The presence of clearly modern materials, such as plastic fragments, modern bottle glass fragments, or twentieth-century architectural materials, in trench profiles or fill deposits will be noted but these materials will not be collected for subsequent analysis.

NYSDOT will coordinate with the Onondaga Nation and provide opportunities for a Nation representative to be present during archaeological monitoring during construction of the proposed Project.

A complete Archaeological Monitoring Protocol, including specific time frames allowable for trench/excavation inspection and investigation of potentially NRHP-eligible archaeological finds, as well as an explanation of the specific activities to be conducted by the archaeologist within the trench, and specific assistance required of construction personnel, is provided in Sections 4.1 and 4.2 of this report.

3.2 Laboratory Methods

Following completion of the archaeological fieldwork, materials recovered will be washed (when appropriate), identified, inventoried and re-bagged in labeled clean 4-mil archival quality plastic bags. Recovered artifacts will then be identified and described based on material type and standard descriptive characteristics in accordance with standard archaeological practice. A complete inventory of collected artifacts will be included as an appendix to the Phase IB report(s).

Depending on whether potentially significant archaeological features or deposits are identified, specialized laboratory analyses for specific materials may be necessary. These may include lithic (stone tool) analysis, vessel reconstruction and/or minimum vessel analyses, faunal (i.e., animal bone) analysis, paleo-botanical (i.e., plant remains) analysis, or other specialized soil/sediment analyses. The need for and appropriate application of specialized archaeological analyses will be determined in consultation with the NYSDOT, SHPO, FHWA, and the Onondaga Nation (for Pre-Contact Native American sites)

All materials will be processed and stored in accordance with the New York State Museum's (NYSM's) Accession Policy and Accession Standards, as articulated in the "Archaeological Curation Guidelines" (http://www.nysm.nysed.gov/services/233/curation.html) and the NYAC Standards (NYAC, 1994). All materials collected from state lands will be treated in accordance with the New York State Education Department Law §233.

3.3 Phase IB Archaeological Survey Report

Within two weeks of the completion of shovel testing, the archaeologist will provide an EOF letter to the NYSDOT summarizing the preliminary results of shovel testing. Additionally, within two weeks of the completion of machine-aided excavation, the archaeologist will provide an EOF letter to the NYSDOT, summarizing the preliminary results of machine-aided testing. The EOF letters will identify potentially eligible archaeological resources, and provide recommendations for additional investigations (i.e., Phase II), if needed, to evaluate the NRHP eligibility of specific archaeological sites. The EOF letters will also identify and map areas where shovel testing or machine-aided testing revealed no archaeological resources.

The results of the Phase I survey will be presented in a formal illustrated report prepared in accordance with the NYSED *Cultural Resources Survey Program Work Scope Specifications for Cultural Resources Investigations for New York State Department of Transportation Projects* (NYSED, 2004), and SHPO's *Phase I Archaeological Report Format Requirements* (NYSOPRHP, 2005). The report will include a narrative summary of the methods and results of the archaeological survey, recommendations regarding S/NRHP eligibility and/or recommendations for additional (i.e., Phase II) investigations to evaluate eligibility for each identified resource, documentation of soils and/or archaeological contexts encountered during the survey, a complete artifact inventory, and will include illustrations, photographs, and maps, as appropriate.

4.0 PLAN FOR ARCHAEOLOGICAL MONITORING DURING CONSTRUCTION

4.1 Plan for Archaeological Monitoring During Construction

Archaeological monitoring will be undertaken by specialists trained in archaeological fieldwork and monitoring and under the supervision of an archaeologist meeting the Secretary of the Interior's Professional Qualification Standards (36 CFR, Appendix A to Part 61). A representative from the Onondaga Nation will be provided opportunities to observe archaeological monitoring during construction.

All archaeological monitoring during construction will be conducted in accordance with existing on-site safety protocols as well as federal labor standards (OSHA 29 CFR 1926 Subpart P). OSHA 29 CFR 1926, Subpart P specifies appropriate protection measures to be used for employees working in open excavations. These include sloping and/or shoring excavation walls to prevent collapse. If the archaeologist needs to enter the open excavation to inspect exposed cultural material, construction personnel will install shoring/support in the open excavation, if this required by OSHA 29 CFR 1926 (Subpart P), given the dimensions of the excavation.

If the archaeological consultant encounters human remains (or potential human remains) during the archaeological monitoring, the *NYSDOT Procedures in the Event of the Inadvertent Discovery of Human Remains during Construction,* the SHPO Human Remains Discovery Protocol, and the Haudenosaunee Protocol on Human Remains, will be followed. Immediately upon notification of the discovery, the NYSDOT will contact the SHPO, FHWA, Tony Gonyea of the Onondaga Nation, and Joseph Heath, General Counsel to the Onondaga Nation. The SHPO Human Remains Discovery Protocol (NYSOPRHP, 2015), the Haudenosaunee Protocol on Human Remains (Haudenosaunee Confederacy, 2002), and the *NYSDOT Procedures in the Event of the Inadvertent Discovery of Human Remains during Construction* are attached to this document as Appendices A, B, and C, respectively and the Human Remains and Funerary Objects Protocol for the current project is discussed further in Section 5.0 of this work plan.

4.1.1 Initial Inspection and Investigation of Potential Cultural Material

If the archaeologist identifies potential cultural material during construction, he/she will request a temporary work stoppage to inspect the location of the exposed cultural material. This temporary work stoppage will be limited to one hour for each area within an approximately 20-foot (6.1-meter) radius. Following the confirmation of the work stoppage, the archaeologist will enter the open excavation, once the necessary shoring, if required, has been installed, and inspect the exposed cultural material. During this initial inspection, the archaeologist may photograph the exposed cultural material, collect the cultural material (or a sample thereof), draw a sketch map of the exposed stratigraphy, take additional notes, remove soil samples, and conduct additional hand excavation with a shovel or a trowel.

Following the initial inspection of identified cultural material, if the archaeologist identifies the materials as obviously, modern, or historic but with no chance of meeting the NRHP Criteria for Evaluation, he or she will notify construction personnel that they can continue work. If, however, following the initial inspection, the archaeologist determines the cultural material to be potentially significant (i.e., meet the NRHP Criteria for Evaluation), he or she will request an extension of the temporary work stoppage in order to further evaluate the exposed cultural material. The extended work stoppage may last up to but no longer than four hours, not including one hour for the initial inspection of exposed cultural material, as described above. Taking into consideration input from the Onondaga Nation representative on-site, the archaeologist will make a preliminary assessment of potential eligibility and coordinate with NYSDOT to determine the need for additional archaeological investigations and documentation. As described in the next section, NYSDOT will consult with the SHPO, FHWA, and the Onondaga Nation. If no additional investigation or documentation is needed, construction activities will resume. Activities undertaken by the archaeologist during the preliminary evaluation of potentially NRHP-eligible (i.e., significant) cultural materials will be similar to those undertaken for initial inspection of cultural materials (discussed above), but may also include screening of excavation back dirt or soil removed via hand excavation through ¼-inch hardware cloth and collection of any artifacts recovered through screening. All evaluative testing activities would be restricted to the APE for Direct Effects for the Project.

The timeframe outlined above would not apply in the case of a human remains discovery. If potential human remains and/or funerary objects associated with human remains are identified during machine-aided archaeological testing, all work in the immediate vicinity will stop the NYSDOT cultural resources lead for the Project will be contacted. All applicable procedures outlined in the NYSDOT *Procedures in the Event of the Inadvertent Discovery of Human Remains during Construction* (Appendix C), SHPO Human Remains Discovery Protocol (NYSOPRHP, 2015) (Appendix A), and the Haudenosaunee Human Remains Protocol (Grand Council of the Haudenosaunee, 2002) (Appendix B) will be followed. In this instance, the temporary work stoppage could last significantly longer than the times listed above. It is important to note that in the case of identified human remains, no additional evaluative testing or data recovery activities will occur.

Given the urban nature of the APE for Direct Effects, it is anticipated that historic and/or modern artifacts may be encountered in secondary fill contexts (i.e., neighborhood trash and coal ash dumps). For archaeological materials clearly located within secondary fill contexts, the archaeological consultant will describe and photograph a representative sample of the materials but will not collect them. Archaeological materials identified in secondary fill contexts will be described in an archaeological monitoring report to be submitted to NYSDOT and FHWA following the conclusion of fieldwork. It should be noted; however, that in addition to formal and informal refuse dumps, the Erie and Oswego Canals within the City of Syracuse were often filled with coal ash and other refuse following their closure in the early twentieth century. Therefore, although individual artifacts encountered within secondary refuse deposits will

not be collected for further analysis, the stratigraphy of these deposits will be carefully documented and, if possible, a determination will be made if they represent canal fill.

The Phase IA Archaeological Sensitivity Assessment (EDR, 2016:158-229) describes in detail the various types of potential archaeological sites that could occur within the APE for Direct Effects, as well as how the significance of each type of archaeological site would be assessed under the NRHP Criteria for Evaluation. For historic archaeological materials, the proposed archaeological monitoring during construction applies primarily to areas with potential to contain Erie or Oswego Canal-related features, but there is the potential for other historic or pre-contact cultural resources to be present in the monitored areas. Potentially significant archaeological resources which may be encountered include:

- Historic cultural resources:
    - Intact portions of the Erie or Oswego Canal prisms, other canal-related features.
    - Intact archaeological features in undisturbed soil contexts such as occupied surfaces, foundations, and shaft features including wells, cisterns, and privies.
    - Diagnostic historic artifacts such as household and/or industrial materials located in undisturbed primary contexts.
    - Any indications of human burials or funerary objects.

- Pre-Contact Native American cultural resources:
    - Intact archaeological features including hearths, storage pits, middens, palisade remnants, and structural remnants.
    - Diagnostic artifacts such as projectile points, ceramics, and other stone and bone tools located in undisturbed primary contexts.
    - Any indications of human burials or funerary objects.

In the cases of the above types of cultural resources, significance would be assessed in the field by the monitoring archaeologist, following the methods discussed above, who will provide preliminary recommendations to NYSDOT. NYSDOT, in turn, will consult with FHWA, SHPO, and the Onondaga Nation. A *Project Contacts Table* is included as Appendix D of this work plan. The Phase IA Archaeological Sensitivity Assessment for the I-81 Viaduct Project (EDR, 2016) discusses the specific considerations which will be brought to bear in assessing significance for different types of cultural resources. However, as a rule, cultural resources will be considered potentially significant if they contain cultural material within intact stratified deposits that maintain a high degree of physical integrity. Cultural materials

indicative of a potentially significant site could include a density and diversity of artifacts, including temporally or culturally diagnostic artifacts, intact features, and artifacts indicative of a specific activity or activities.

If the archaeological consultant determines the discovery to be a potentially significant archaeological resource (i.e., potentially NRHP-eligible), he/she will immediately notify the NYSDOT Project Manager (or identified Point of Contact) and/or onsite construction manager and request a temporary suspension of work in the location, consistent with the time frames discussed above in this Section. Preliminary determination of NRHP-eligibility will be based on the identification of potentially significant cultural resources as described above.

4.1.2 Additional Archaeological Investigations to Determine NR Eligibility

In some cases, additional archaeological testing/documentation of significant or potentially significant cultural resources, beyond the initial inspection and preliminary assessment of significance discussed above, may be required. The need for additional archaeological testing/documentation of potentially significant archaeological resources will be assessed based on consultation between the on-site archaeological monitor and NYSDOT, who will in turn consult with FHWA, SHPO, and the Onondaga Nation. Additional archaeological testing/documentation is anticipated to be necessary in cases where large intact portions of significant cultural resources occur within the APE for Direct Effects. These cultural resources would need to be recovered or sampled prior to the continuation of construction in the area. Additional archaeological testing/documentation may also be necessary in cases where the full extent/nature of the cultural resource identified within the APE for Direct Effects is unclear or impossible to establish based on the amount exposed by construction activities. In these cases, construction activities in the immediate vicinity of the cultural resources would cease and the archaeologist would proceed to test, record, and/or recover the cultural materials to an extent agreed upon by NYSDOT as sufficient. Additional testing/documentation in these cases would be limited to eight hours for each individually identified resource in the case of non-canal resources, or eight hours per 50 linear feet (15 meters) of exposed canal or canal-related features.

When potentially significant cultural resources are identified, the archaeological monitor will consult with Project personnel to determine the best course of action moving forward. It likely will be appropriate to initiate archaeological sampling immediately to further evaluate the integrity and potential significance of any identified archaeological remains. Unless otherwise directed by NYSDOT based on consultation with the SHPO, FHWA and Onondaga Nation, all work to evaluate the discovered archaeological resources will be restricted to the proposed area of potential earth disturbance associated with the Project (i.e., the APE for Direct Effects).

4.1.3 Implementation of Data Recovery Procedures

In an instance where exposed cultural material is determined to meet the NRHP Criteria for Evaluation, the archaeologist will immediately contact NYSDOT, as discussed above. All construction work in the immediate vicinity of the discovery will cease and data recovery procedures will be implemented. Data recovery procedures will be implemented to minimize the interruption of construction. Therefore, construction activities will only be stopped in the immediate vicinity of the data recovery, and only to the extent to ensure the safety of the on-site archaeologists and to ensure the protection of the exposed cultural material until data recovery is complete. Once initiated, it is anticipated that data recovery activities at any given location will be completed within no more than 15 days of the initiation of data recovery fieldwork.

Data recovery activities may include the documentation, photography, measurement, and collection of historic period or pre-contact Native American archaeological materials exposed within construction excavations. Data recovery may also involve additional investigation of such resources by hand excavation. As noted above, data recovery would occur when cultural material that meets the NRHP Criteria for Evaluation has been exposed by construction activities. This could include, but is not limited to, intact portions of the Erie or Oswego Canal prisms, or other intact canal-related features, historic structural foundations or shaft features, or significant concentrations or deposits of diagnostic historic artifacts. It could also include intact pre-contact Native American archaeological features including hearths, storage pits, middens, palisade remnants, or structure remains, or significant concentrations of diagnostic pre-contact artifacts such as projectile points, ceramics, and other stone and bones tools located in an undisturbed primary context.

In the case of historic features and artifacts encountered during construction monitoring, data recovery activities will consist of documentation of exposed features and soil stratigraphy and the collection of exposed artifacts (or a sample thereof). In the case of pre-contact Native American features and artifacts encountered during construction monitoring, data recovery activities could consist of documentation of exposed features and soil stratigraphy and the collection of feature fill and/or exposed artifacts (or a sample thereof). Typically, data recovery activities will be restricted to open excavations; however, in some limited cases it may be necessary to expose additional areas as part of data recovery. This will be accomplished via hand excavation wherever possible, but may also require mechanical excavation. In these instances, it is anticipated that data recovery activities could last for up to 10 hours for each individually identified resource in the case of non-canal (historic or pre-contact) resources, or 10 hours per 50 linear feet (15 meters) of exposed canal prism or canal-related features.

As discussed above for artifacts recovered during Phase IB survey, all artifacts recovered during data recovery investigations will be processed and stored in accordance with the New York State Museum's (NYSM's) Accession Policy and Accession Standards, as articulated in the "Archaeological Curation Guidelines"

(http://www.nysm.nysed.gov/services/233/curation.html) and the NYAC Standards (NYAC, 1994). All materials collected from state lands will be treated in accordance with the New York State Education Department Law §233.

Additionally, as discussed above for data recovery occurring as a result of Phase IB survey an EOF letter will be prepared and submitted to NYSDOT within five days of the conclusion of data recovery fieldwork. The EOF will summarize the preliminary results of the investigations, make recommendations for further work (or lack thereof), and present a time frame for the completion of a full Phase III report.

4.2 Contractor Assistance and Consideration

The following is a summary of expectations and considerations pertaining to the construction contractor's role in archaeological monitoring and/or data recovery investigations for the Project.

Archaeological Monitoring and Contractor General Considerations:

- The construction contractor should expect delays due to the identification of cultural materials during excavation.
- All archaeological monitoring during construction will be conducted in accordance with existing on-site safety protocols as well as federal labor standards (OSHA 29 CFR 1926 Subpart P).
- Temporary work stoppages for the preliminary investigation of exposed cultural materials will be limited to one hour for each approximately 20-foot (6.1-meter) radius area.
- Extended temporary work stoppages to further evaluate potentially NRHP-eligible cultural materials may last for up to four hours, not including the initial temporary stoppage discussed above.
- In some cases, additional archaeological testing/documentation of significant or potentially significant cultural resources, beyond the initial inspection and preliminary assessment of significance discussed above, may be required. Additional testing/documentation in these cases would be limited to eight hours for each individually identified resource in the case of non-canal resources, or eight hours per 50 linear feet (15 meters) of exposed canal or canal-related features.
- In certain cases, when exposed cultural material has been determined to be eligible or potentially eligible for listing on the NRHP, data recovery investigations will be implemented during which construction in this location will be suspended for up to 15 days. For historic-period archaeological resources, it is anticipated that data recovery investigations will require no more than 10 hours per individual non-canal related resource and 10 hours for every 50 linear feet of exposed canal prism or canal-related resource.
- If human remains are identified, all construction in the vicinity of the discovery will cease pending consultation, as discussed in Section 5.0 of this document. As described above, the time restrictions for temporary work stoppages do not apply to the discovery of human remains. In each case, the duration of the work stoppage

will be determined by the time needed to carry out actions for avoidance or an appropriate treatment as determined through consultation. Within 24-72 hours of the discovery, NYSDOT will notify the construction contractor of the expected duration for the suspension of the construction activities in the area of the discovery.

Construction Contractor Responsibilities:

- The contractor will stop or slow work as directed by the archaeologist.
- If human remains are identified, all construction in the vicinity of the discovery will cease pending consultation among the SHPO, FHWA, the Onondaga Nation, and NYSDOT, as discussed in Section 5.0 of this document. Communication and coordination among the consulting parties will be done by NYSDOT and is not the obligation of the construction contractor.
- The contractor will assist the archaeologist in complying with all work place safety measures, including shoring trenches deeper than 4 feet (1.2 meters) for the archaeologist to enter.
- If data recovery investigation is required at specific locations, it may be necessary to leave excavations open overnight. It will be the construction contractor's responsibility to secure the open excavation in these cases.
- The construction contractor will provide heavy equipment and an operator to aid the archaeologist in tasks such as the removal of overburden during archaeological monitoring and data recovery.
- The construction contractor and/or NYSDOT will provide the archaeologist with at least one week's notice prior to initiating construction/excavation in areas subject to archaeological monitoring, for logistical reasons.

Archaeologist Responsibilities:

- The archaeologist will comply with all on site safety rules and regulations.
- The archaeologist will communicate the need for and anticipated duration of any temporary work stoppages clearly and effectively to the construction contractor if cultural materials are exposed.
- The archaeologist will also clearly communicate to the construction contractor if and when work may resume in a given area.
- If the archaeological consultant determines the discovery to be a potentially significant archaeological resource (i.e., potentially NRHP-eligible), he/she will immediately notify the NYSDOT Project Manager (or identified Point of Contact)

5.0 HUMAN REMAINS AND FUNERARY OBJECTS PROTOCOL

In the event of an unanticipated discovery of potential human remains and/or funerary objects, all work in the immediate vicinity will stop until further notice and the NYSDOT cultural resources lead for the Project will be contacted. The potential remains/funerary objects will be treated with respect, left *in situ* by all on site personnel, and protected from further disturbance. All fieldwork will be conducted in accordance with SHPO's Human Remains Discovery Protocol (NYSOPRHP, 2015) (Appendix A), and the Haudenosaunee Human Remains Protocol (Grand Council of the Haudenosaunee, 2002) (Appendix B). If the discovery occurs during the Project's construction, the *NYSDOT Procedures in the Event of the Inadvertent Discovery of Human Remains during Construction* will be implemented (Appendix C). If human remains or funerary objects are Native American, a treatment plan will be developed in consultation with the SHPO and the Onondaga Nation, consistent with the established protocols and guidance. It is worth noting that the SHPO, Haudenosaunee, and NYDSOT human remains protocols all require temporary suspension of activity in the vicinity of the discovery, protection of discovered remains, notification of SHPO and Native American representatives, and consultation regarding treatment of remains.

6.0 REFERENCES

Bonafide, John. 2016. Re: FHWA/NYSDOT Interstate 81-Viaduct Project/PIN 3501.60, Towns of Salina, Cicero and Dewitt/City of Syracuse, Onondaga County 16PR006314 (13PR05089 and 13PR05437). Review Correspondence from John Bonafide (NYSOPRHP) to Daniel P. Hitt (NYSDOT). New York State Office of Parks, Recreation, and Historic Preservation, Waterford, NY. September 22, 2016.

Carnes-McNaughton, Linda F. and Terry M. Harper. 2000. The Parity of Privies: Summary Research on Privies in North Carolina. *Historical Archaeology* 34(1), p. 97-110.

Ducre, K. A. 2012. *A Place We Call Home: Gender, Race, and Justice in Syracuse*. Syracuse University Press, Syracuse, New York.

Environmental Design and Research Landscape Architecture, Engineering, and Environmental Services, D.P.C. (EDR). 2016. *Phase 1A Archaeological Sensitivity Assessment: I-81 Viaduct Project (NYSDOT PIN 3501.60)*. Report prepared for the New York State Department of Transportation and the U.S. Department of Transportation, Federal Highway Administration by EDR, Syracuse, NY.

Federal Highway Works Administration and New York State Department of Transportation (FHWA and NYSDOT). 2016. I-81 Viaduct Project: Draft Environmental Impact Statement. Federal Highway Works Administration and New York State Department of Transportation, Albany, NY.

Geismar, Joan H. 1993. Where Is Night Soil? Thoughts on an Urban Privy. *Historical Archaeology* 27(2), p. 57-70.

Grand Council of the Haudenosaunee. 2002. *Protocol for Handling Discovery of Human Remains*. Grand Council of Haudenosaunee. Available on-line at: http://www.indiantime.net/story/2009/06/25/cultural-corner/haudenosaunee-policy-on-human-remains/2613.html.

Hartgen Archaeological Associates (HAA). 2001a. *Phase II End of Field Work Letter: Onondaga County Combined Sewer Outflow Lake Improvement Program: Kirkpatrick Street Pump Station and Force Main Project and Onondaga Creek Floatables Control Facility Project, City of Syracuse, Onondaga County, New York*. Report prepared for Environmental Engineering Associates, LLP by Hartgen Archaeological Associates, Rensselaer, NY.

HAA. 2001b. *Phase 1B Archeological Field Investigation: EBSS Gate Chamber No. 4 Storm and Sanitary Sewer Modifications, City of Syracuse, Onondaga County, New York*. Report prepared for Barton & Loguidice, D.P.C. by Hartgen Archaeological Associates, Rensselaer, NY.

HAA. 2001c. *Phase 1B Archaeological Field Reconnaissance: Kirkpatrick Street Pump Station and Force Main Project and Onondaga Creek Floatables Control Facility Project, City of Syracuse, Onondaga, New York*. Report prepared for Environmental Engineering Associates, LLP by Hartgen Archaeological Associates, Rensselaer, NY.

HAA. 2003a. *Onondaga County Combined Sewer Overflow Lake Improvement Program: Phase 1B Archaeological Field Reconnaissance, Clinton Street CSO Abatement Project, Clinton Station Site, City of Syracuse, Onondaga County, New York*. Report prepared for Environmental Engineering Associates, LLP by Hartgen Archaeological Associates, Albany, NY.

HAA. 2003b. *Onondaga County Combined Sewer Overflow Lake Improvements Program: Archeology Plan and Work Scope Phase 1B Archeological Field Reconnaissance of the Dickerson Street West Option and Clinton Station Sites, Proposed Clinton Street Combined Sewer Overflow Project, City of Syracuse, Onondaga County, New York*. Report prepared for Environmental Engineering, LLP by HAA, Rensselaer, NY.

Heck, Dana B. and Joseph F. Balicki. 1998. Katherine Naylor's "House of Office": A Seventeenth-Century Privy. *Historical Archaeology* 32(3), p. 24-37.

McCarthy, John P. and Jeanne A. Ward. 2000. Sanitation Practices, Depositional Processes, and Interpretive Contexts of Minneapolis Privies. *Historical Archaeology* 34(1), p. 111-129.

New York Archaeological Council (NYAC). 1994. *Standards for Cultural Resource Investigations and the Curation of Archaeological Collections in New York State*. The New York Archaeological Council and the New York State Office of Parks, Recreation, and Historic Preservation, Waterford, NY.

NYAC. 2002. *Guidelines for the Use of Archaeological Monitoring as an Alternative to Other Field Techniques*. Available online at: http://nyarchaeology.org/nyac/monitoring-guidelines/.

New York State Education Department (NYSED), Cultural Resources Survey Program. 2004. *Work Scope Specifications for Cultural Resources Investigations on New York State Department of Transportation.* New York State Education Department, Albany.

New York State Office of Parks, Recreation, and Historic Preservation (NYSOPRHP). 2005. *New York State Historic Preservation Office (SHPO) Phase 1 Archaeological Report Format Requirements*. New York State Office of Parks, Recreation, and Historic Preservation, Waterford, NY.

NYSOPRHP. 2015. *State Historic Preservation Office/ New York State Office of Parks, Recreation and Historic Preservation Human Remains Discovery Protocol*. New York State Office of Parks, Recreation, and Historic Preservation, Waterford, NY.

Occupational Health and Safety Administration (OSHA). 2015. *Trenching and Excavation Safety (2226-10R 2015)*. U.S. Department of Labor, Occupational Health and Safety Administration, Washington, D.C.

Panamerican Consultants, Inc. 2000. *Phase 1B Cultural Resources Investigations at Clinton Square, City of Syracuse, Onondaga County, New York*. Report prepared for Dr. Edward V. Curtin by Panamerican Consultants, Inc., Buffalo, NY.

Roberts, Daniel G and David Barrett. 1984. Nightsoil Disposal Practices of the 19th Century and the Origin of Artifacts in Plowzone Proveniences. *Historical Archaeology* 18(1), p. 108-115.

Stamps, S. David and Miriam Barney Stamps. 2008. *Salt City and Its Black Community.* Syracuse University Press, Syracuse, NY.

Stottman, M. Jay. 2000. Out of Sight, out of Mind: Privy Architecture and the Perception of Sanitation. *Historical Archaeology* 34(1), p. 39-61.

Wheeler, Kathleen. 2000. Theoretical and Methodological Considerations for Excavating Privies. *Historical Archaeology* 34(1), p. 3-19.

Figures

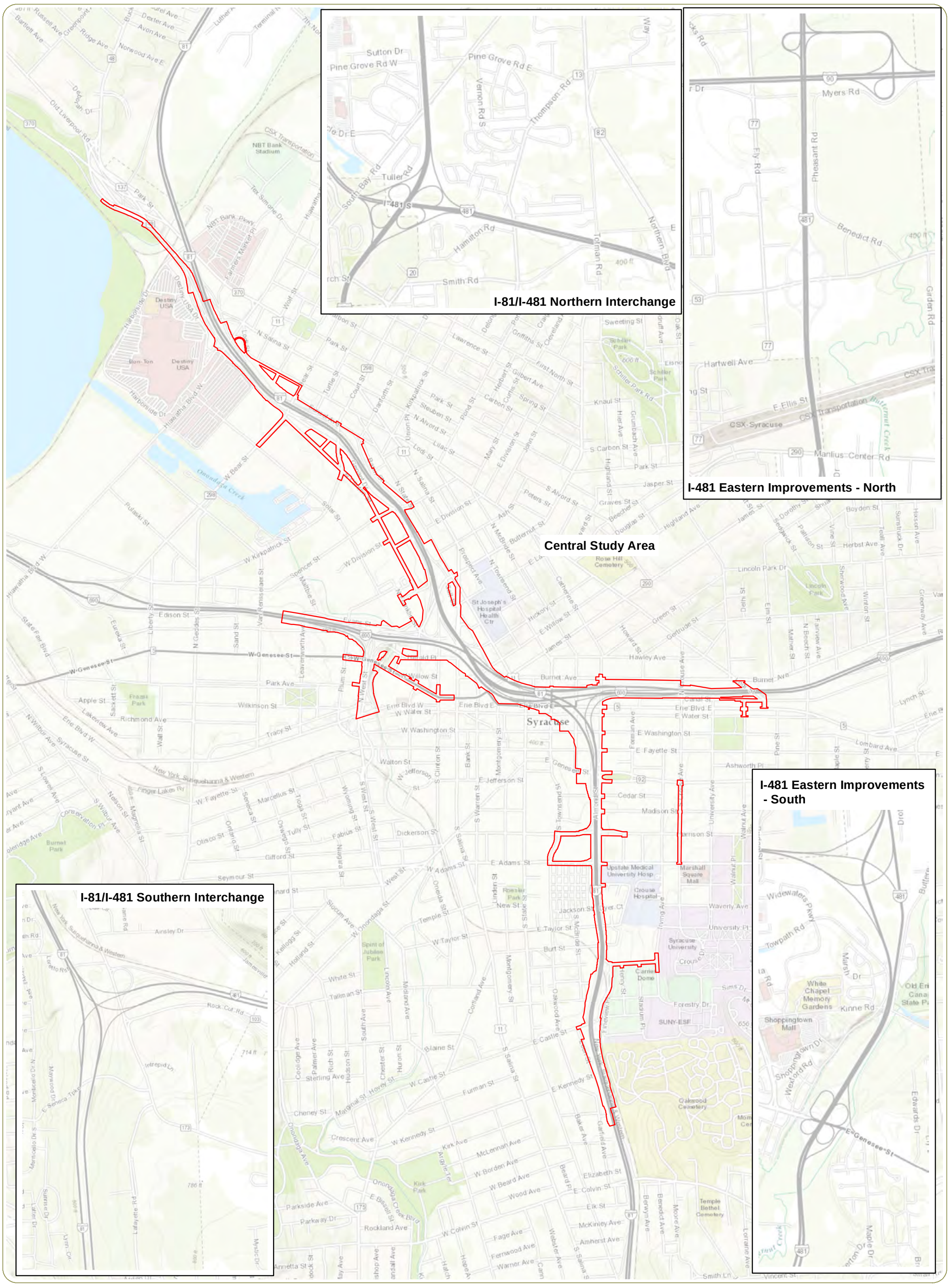

I-81 Viaduct Project

Onondaga County, New York

Figure 1: Area of Potential Effect for Direct Effects

Sheet 1: Viaduct Alternative

September 2017

Notes: 1. Basemap: ESRI ArcGIS Online "World Topographic Map" Map Service.
2. This is a color graphic. Reproduction in grayscale may misrepresent the data.

APE for Direct Effects

Legend

0 500 1,000 2,000 Feet

N W E S

NEW YORK STATE OF OPPORTUNITY. Department of Transportation

U.S. Department of Transportation Federal Highway Administration

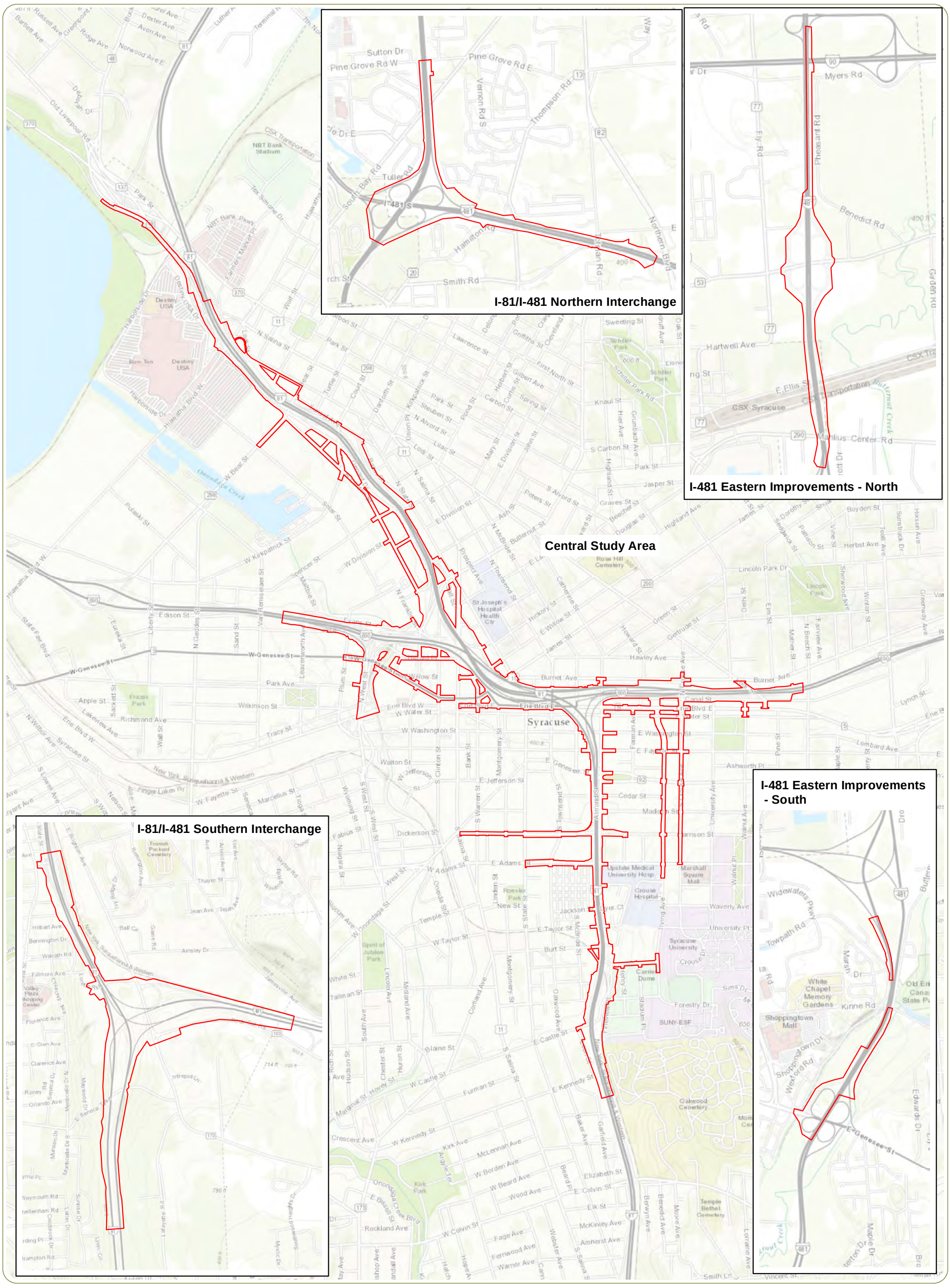

I-81 Viaduct Project

Onondaga County, New York

Figure 1: Area of Potential Effect for Direct Effects
Sheet 2: Community Grid Alternative

September 2017

Notes: 1. Basemap: ESRI ArcGIS Online "World Topographic Map" Map Service.
2. This is a color graphic. Reproduction in grayscale may misrepresent the data.

APE for Direct Effects

Legend

0 500 1,000 2,000 Feet

N W E S

NEW YORK STATE OF OPPORTUNITY. Department of Transportation

U.S. Department of Transportation
Federal Highway Administration

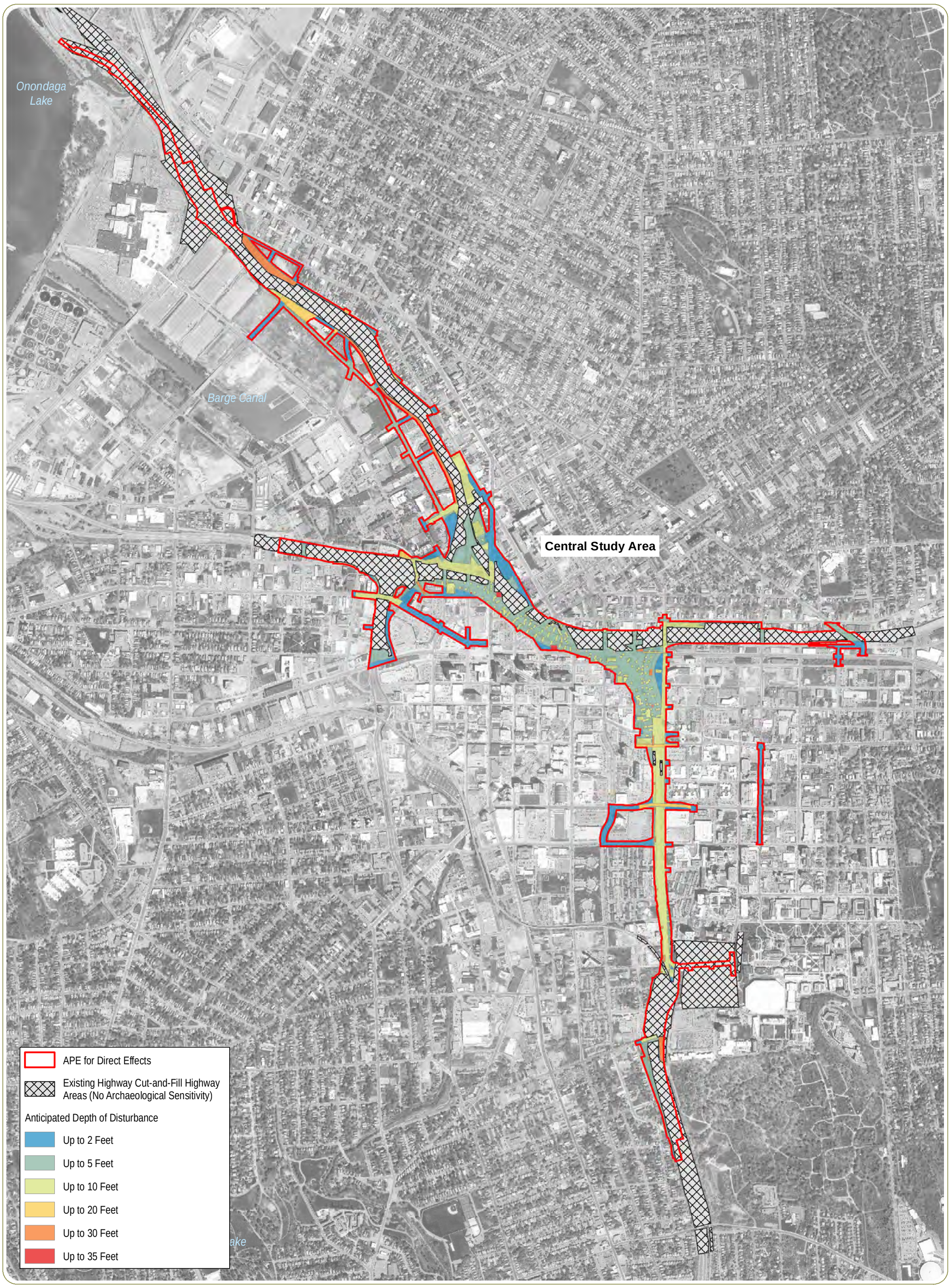

I-81 Viaduct Project

Onondaga County, New York

Figure 2: Anticipated Depth of Soil Disturbance (Estimated)
Sheet 1: Viaduct Alternative

September 2017

Notes:
1. Basemap: NYS Digital Orthoimagery Program 1-foot resolution orthoimagery, 2015.
2. This is a color graphic. Reproduction in grayscale may misrepresent the data.

0 500 1,000 2,000 Feet

N W E S

NEW YORK STATE OF OPPORTUNITY. Department of Transportation

U.S. Department of Transportation
Federal Highway Administration

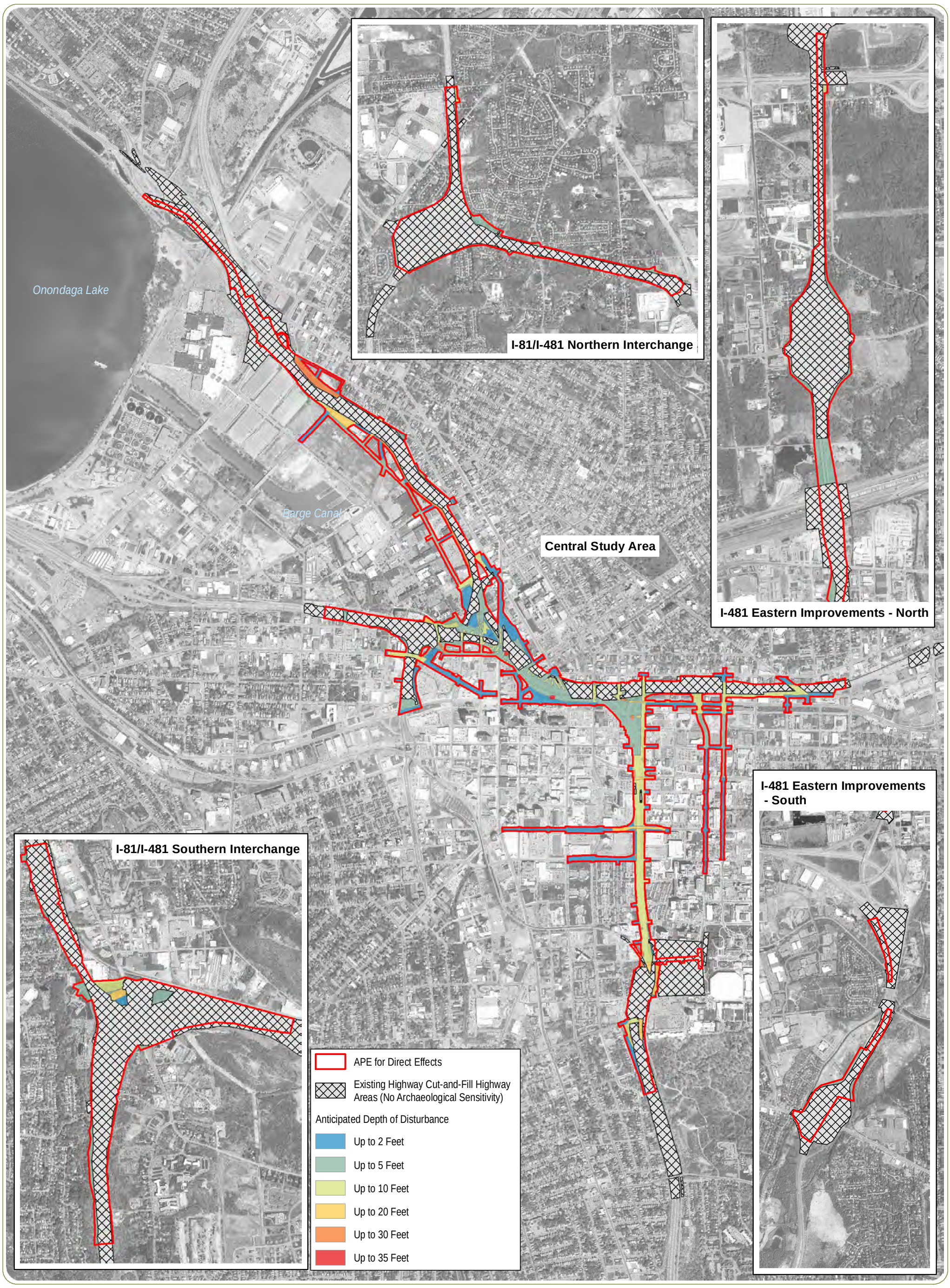

I-81 Viaduct Project

Onondaga County, New York

Figure 2: Anticipated Depth of Soil Disturbance (Estimated)
Sheet 2: Community Grid Alternative

September 2017

Notes:
1. Basemap: NYS Digital Orthoimagery Program 1-foot resolution orthoimagery, 2015.
2. This is a color graphic. Reproduction in grayscale may misrepresent the data.

0 500 1,000 2,000 Feet

N W E S

NEW YORK STATE OF OPPORTUNITY. Department of Transportation

U.S. Department of Transportation
Federal Highway Administration

[REDACTED]

I-81 Viaduct Project

Onondaga County, New York

Figure 3: Archaeological Sensitivity

Sheet 1: Viaduct Alternative

September 2017

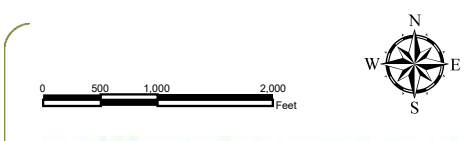

NEW YORK STATE OF OPPORTUNITY. Department of Transportation

U.S. Department of Transportation
Federal Highway Administration

[REDACTED]

I-81 Viaduct Project

Onondaga County, New York

Figure 3: Archaeological Sensitivity

Sheet 2: Viaduct Alternative

September 2017

0 500 1,000 2,000 Feet

N W E S

NEW YORK STATE OF OPPORTUNITY. Department of Transportation

U.S. Department of Transportation Federal Highway Administration

1. Per consultation with the Onondaga Nation, all areas along the historic alignment of Onondaga Creek and any additional areas near the natural/original course of waterbodies within the APE should be considered sensitive for the potential to contain human burials. To address these concerns, the mapped extent and path of watercourses within the APE for Direct Effects were digitized and included in GIS mapping for the project. Historic maps from 1827, 1834, 1852, 1859, 1874, and 1938-1943 were digitally georeferenced using GIS software. All watercourses depicted on those maps within or immediately adjacent to the APE were traced, and buffered by 50 feet (15 meters) to account for uncertainty in the original cartographic depiction of watercourses and/or potential geo-referencing errors. Areas adjacent to the mapped former locations of these waterbodies represent areas that are considered archaeologically sensitive due to potential for buried human remains.
2. Only those cemeteries and areas where historical records indicate the potential for human burials located within or adjacent to the APE for Direct Effects of the Viaduct Alternative are depicted on this map.

Central Study Area

I-481 Eastern Improvements - North

I-81/I-481 Northern Interchange

I-81/I-481 Southern Interchange

I-481 Eastern Improvements - South

Old St. Mary's Cemetery

Oakwood Cemetery

I-81 Viaduct Project

Onondaga County, New York

Figure 4: Areas of Potential Sensitivity for Human Remains
Sheet 1: Viaduct Alternative

September 2017

Notes: 1. Basemap: ESRI ArcGIS Online "World Topographic Map" Map Service.
2. This is a color graphic. Reproduction in grayscale may misrepresent the data.

Legend

- Areas Adjacent to Streams Depicted on Historic Maps
- Cemeteries
- APE for Direct Effects

Map Documented Watercourses

- 1827
- 1834
- 1852
- 1859
- 1874
- 1938-1943

0 500 1,000 2,000 Feet

N W E S

NEW YORK STATE OF OPPORTUNITY. Department of Transportation

U.S. Department of Transportation
Federal Highway Administration

1. Per consultation with the Onondaga Nation, all areas along the historic alignment of Onondaga Creek and any additional areas near the natural/original course of waterbodies within the APE should be considered sensitive for the potential to contain human burials. To address these concerns, the mapped extent and path of watercourses within the APE for Direct Effects were digitized and included in GIS mapping for the project. Historic maps from 1827, 1834, 1852, 1859, 1874, and 1938-1943 were digitally georeferenced using GIS software. All watercourses depicted on those maps within or immediately adjacent to the APE were traced, and buffered by 50 feet (15 meters) to account for uncertainty in the original cartographic depiction of watercourses and/or potential geo-referencing errors. Areas adjacent to the mapped former locations of these waterbodies represent areas that are considered archaeologically sensitive due to potential for buried human remains.
2. Only those cemeteries and areas where historical records indicate the potential for human burials located within or adjacent to the APE for Direct Effects of the Community Grid Alternative are depicted on this map.

Central Study Area

I-481 Eastern Improvements - North

I-81/I-481 Northern Interchange

I-81/I-481 Southern Interchange

I-481 Eastern Improvements - South

Old St. Mary's Cemetery

Oakwood Cemetery

I-81 Viaduct Project

Onondaga County, New York

Figure 4: Areas of Potential Sensitivity for Human Remains
Sheet 2: Community Grid Alternative
September 2017

Notes: 1. Basemap: ESRI ArcGIS Online "World Topographic Map" Map Service.
2. This is a color graphic. Reproduction in grayscale may misrepresent the data.

Legend

- Areas Adjacent to Streams Depicted on Historic Maps
- Cemeteries
- APE for Direct Effects

Map Documented Watercourses

- 1827
- 1834
- 1852
- 1859
- 1874
- 1938-1943

0 500 1,000 2,000 Feet

N W E S

NEW YORK STATE OF OPPORTUNITY. Department of Transportation

U.S. Department of Transportation
Federal Highway Administration

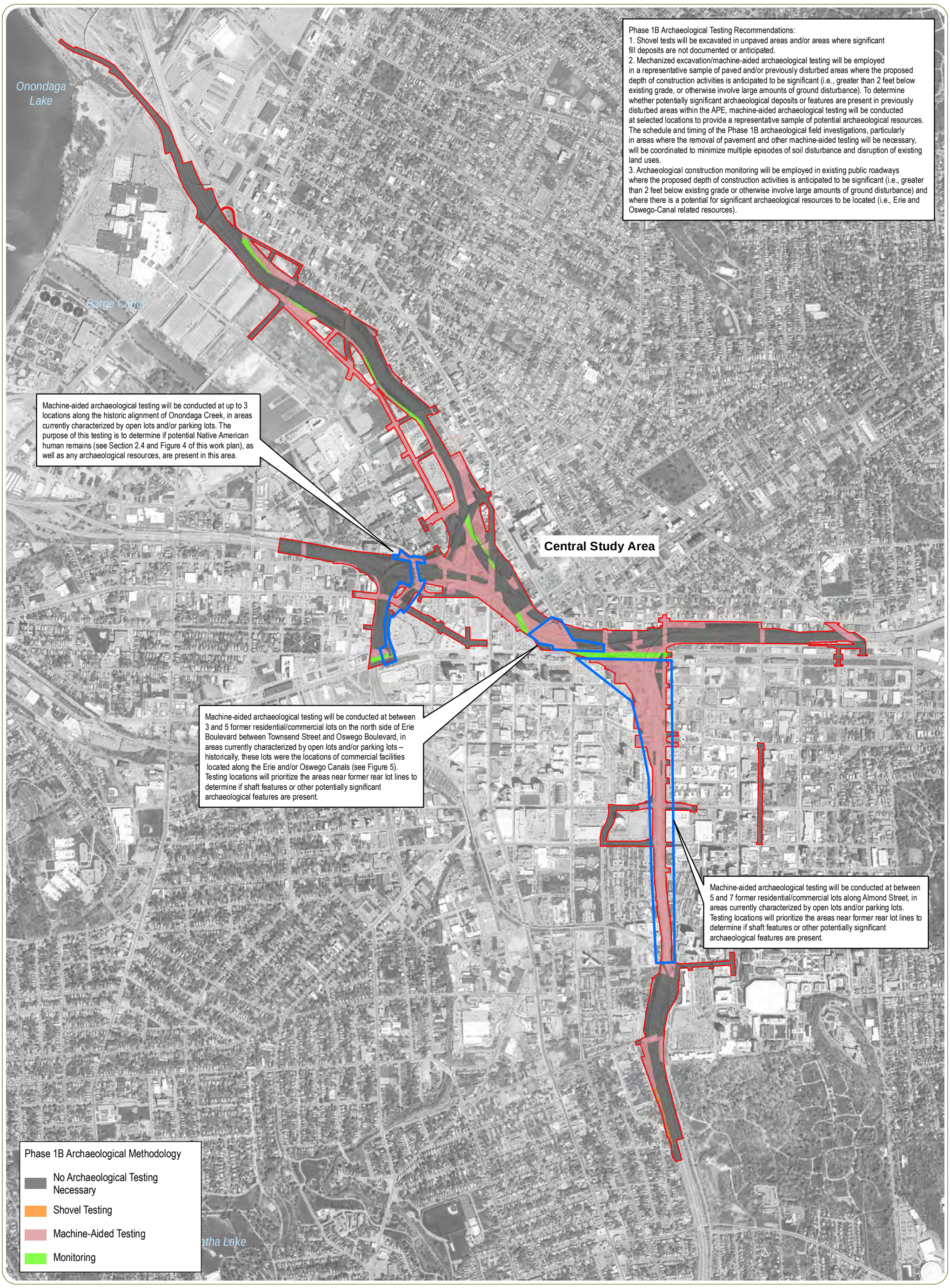

I-81 Viaduct Project

Onondaga County, New York

Figure 5: Recommended Phase 1B Archaeological Methods
Sheet 1: Viaduct Alternative

September 2017

Notes:
1. Basemap: NYS Digital Orthoimagery Program 1-foot resolution orthoimagery, 2015.
2. This is a color graphic. Reproduction in grayscale may misrepresent the data.

0 500 1,000 2,000 Feet

N W E S

NEW YORK STATE OF OPPORTUNITY. Department of Transportation

U.S. Department of Transportation
Federal Highway Administration

Phase 1B Archaeological Testing Recommendations:
1. Shovel tests will be excavated in unpaved areas and/or areas where significant fill deposits are not documented or anticipated.
2. Mechanized excavation/machine-aided archaeological testing will be employed in a representative sample of paved and/or previously disturbed areas where the proposed depth of construction activities is anticipated to be significant (i.e., greater than 2 feet below existing grade, or otherwise involve large amounts of ground disturbance). To determine whether potentially significant archaeological deposits or features are present in previously disturbed areas within the APE, machine-aided archaeological testing will be conducted at selected locations to provide a representative sample of potential archaeological resources. The schedule and timing of the Phase 1B archaeological field investigations, particularly in areas where the removal of pavement and other machine-aided testing will be necessary, will be coordinated to minimize multiple episodes of soil disturbance and disruption of existing land uses.
3. Archaeological construction monitoring will be employed in existing public roadways where the proposed depth of construction activities is anticipated to be significant (i.e., greater than 2 feet below existing grade or otherwise involve large amounts of ground disturbance) and where there is a potential for significant archaeological resources to be located (i.e., Erie and Oswego-Canal related resources).

Onondaga Lake

Barge Canal

Machine-aided archaeological testing will be conducted at up to 3 locations along the historic alignment of Onondaga Creek, in areas currently characterized by open lots and/or parking lots. The purpose of this testing is to determine if potential Native American human remains (see Section 2.4 and Figure 4 of this work plan), as well as any archaeological resources, are present in this area.

Machine-aided archaeological testing will be conducted at between 3 and 5 former residential/commercial lots on the north side of Erie Boulevard between Townsend Street and Oswego Boulevard, in areas currently characterized by open lots and/or parking lots – historically, these lots were the locations of commercial facilities located along the Erie and/or Oswego Canals (see Figure 5). Testing locations will prioritize the areas near former rear lot lines to determine if shaft features or other potentially significant archaeological features are present.

I-481 Eastern Improvements - North

Central Study Area

I-81/I-481 Northern Interchange

I-481 Eastern Improvements - South

I-81/I-481 Southern Interchange

Machine-aided archaeological testing will be conducted at between 5 and 7 former residential/commercial lots along Almond Street, in areas currently characterized by open lots and/or parking lots. Testing locations will prioritize the areas near former rear lot lines to determine if shaft features or other potentially significant archaeological features are present.

Recommended Phase 1B Archaeological Testing Methodology

- No Archaeological Testing Necessary
- Shovel Testing
- Machine-Aided Testing
- Monitoring

I-81 Viaduct Project

Onondaga County, New York

Figure 5: Recommended Phase 1B Archaeological Methods
Sheet 2: Community Grid Alternative

September 2017

Notes:
1. Basemap: NYS Digital Orthoimagery Program 1-foot resolution orthoimagery, 2015.
2. This is a color graphic. Reproduction in grayscale may misrepresent the data.

0 500 1,000 2,000 Feet

N W E S

NEW YORK STATE OF OPPORTUNITY. Department of Transportation

U.S. Department of Transportation
Federal Highway Administration

Appendix A:

New York State Office of Parks, Recreation and Historic Preservation Human Remains Discovery Protocol and Native American Graves Protection and Repatriation Act Guidance

State Historic Preservation Office/
New York State Office of Parks, Recreation and Historic Preservation
Human Remains Discovery Protocol
(June 2015)

In the event that human remains are encountered during construction or archaeological investigations, the New York State Historic Preservation Office (SHPO) recommends that the following protocol is implemented:

- Human remains must be treated with the utmost dignity and respect at all times. Should human remains or suspected human remains be encountered, work in the general area of the discovery will stop immediately and the location will be immediately secured and protected from damage and disturbance.

- Human remains or associated artifacts will be left in place and not disturbed. No skeletal remains or materials associated with the remains will be collected or removed until appropriate consultation has taken place and a plan of action has been developed.

- The SHPO, the appropriate Indian Nations, the involved state and federal agencies, the coroner, and local law enforcement will be notified immediately. Requirements of the corner and local law enforcement will be met. A qualified forensic anthropologist, bioarchaeologist or physical anthropologist will assess the remains *in situ* to help determine if the remains are Native American or non-Native American.

- If human remains are determined to be Native American, the remains will be left in place and protected from further disturbance until a plan for their avoidance or removal can be generated. Please note that avoidance is the preferred choice of the SHPO and the Indian Nations. The involved agency will consult SHPO and appropriate Indian Nations to develop a plan of action that is consistent with the Native American Graves Protection and Repatriation Act (NAGPRA) guidance. Photographs of Native American human remains and associated funerary objects should not be taken without consulting with the involved Indian Nations.

- If human remains are determined to be non-Native American, the remains will be left in place and protected from further disturbance until a plan for their avoidance or removal can be generated. Please note that avoidance is the preferred choice of the SHPO. Consultation with the SHPO and other appropriate parties will be required to determine a plan of action.

Appendix B:

Haudenosaunee Protocol for Handling Discovery of Human Remains

4.7 Protocol for Handling Discovery of Human Remains

	Known Burials	Unidentified Burials
When to contact?	**Intentional excavation** At the earliest time in decision-making process.	**Inadvertent Discovery** Upon discovery.
Which Nation to contact?	If find is within existing Nation boundary, contact that Nation's Cultural Resource representatives. If the find is within the traditional land use area (fifty mile radius from the current nation territory, contact the closest Nation's Cultural Resource Representative. If the find is within the aboriginal territory of each nation, as shown on the attached map, contact the Nation within that territory. For finds located within fifty miles on either side of the boundary lines shown on the map, contact the Cultural Resource Representatives of both Nations.	
Who to contact?	Haudenosaunee Cultural Resource Representatives HSCBRR	Haudenosaunee Cultural Resource Representatives HSCBRR
How to contact?	Contact list is provided.	
Information Required	Brief description of the find or potential find; site map and any information on the known cultural history of the area and summary of nearby archaeological findings.	
	Nation will send a representative to review the site.	Company must hire a Native American on-site observer.
Next steps	***Non-disturbance of burials is preferred.*** If after proper consultation, the remains must be removed, we prefer to have them reburied close to their original location as possible, provided the future sanctity of the grave can be assured. ***No remains should be removed without proper cultural protocols.*** If no safe local burial ground can be offered, the Haudenosaunee will reclaim the remains for reburial at an undisclosed location. The local government /state agency/developer must pay all of the costs for such reburial. All objects associated with the original burial must be reburied as well. All of the soil in the immediate area of the burial should also be placed in the new grave.	
Time Frame	30 to 45 days	As soon as possible

2002 © Intellectual Property Rights of the Grand Council of the Haudenosaunee - Text cannot be used without the written consent of the Grand Council of the Haudenosaunee.

Appendix C:

NYSDOT Procedures in the Event of the Inadvertent Discovery of Human Remains during Construction

NYSDOT Procedures in the Event of the Inadvertent Discovery of Human Remains during Construction[1]

1. If a burial site, human remains, or bones thought to be human remains, are encountered during construction for a NYSDOT undertaking, the work will be stopped immediately and rescheduled to avoid disturbing the area. The remains will be left in place and protected from further damage.

2. In accordance with the current NYSDOT Standard Specifications, Section 107-01 D. *Archaeological Salvage*[2], the Engineer-in-Charge (EIC) will, through proper channels, notify appropriate Department personnel and other authorities. The EIC will report the discovery of human remains to the local police, and the county coroner having jurisdiction, or to the medical examiner, and will arrange immediate inspection of the site[3].

3. If the site is determined to be part of a criminal investigation, the police will notify the EIC when work in the area may resume.

4. If determined that the remains are not a police issue, the Regional Cultural Resources Coordinator (CRC) will notify the Federal Highway Administration (FHWA), the Office of Parks, Recreation and Historic Preservation/ State Historic Preservation Office (OPRHP/SHPO), appropriate Indian tribal contacts, and archaeologists, and arrange site visits accordingly. Work will be temporarily suspended in the area, and measures will be taken to secure the burial site and protect the remains from disturbance, including the placement of a twenty-five foot protective buffer around the burial site.

5. The NYSDOT Environmental Science Bureau (ESB), in coordination with the Region, will arrange for a qualified physical anthropologist to examine the remains. NYSDOT in coordination with FHWA will invite designated Indian tribal representative(s) to participate in the consultation process. Representatives will be determined on the basis of established Department contacts and identified areas of interest for tribal nations. The remains will not be removed until determined by the qualified physical anthropologist to be non-native.

6. NYSDOT, in consultation with the OPRHP/SHPO, Indian tribes and other identified consulting parties, will arrange for an archeologist to establish horizontal and vertical extent of the burial(s) and assess measures for avoiding the human remains if possible. The avoidance of human remains is the preferred choice.

7. Any new location or alignment developed to avoid the burial(s) will be subject to archaeological investigation, and the results will be provided to the OPRHP/SHPO, Indian tribes, and other consulting parties as appropriate for comment before the project proceeds in this area.

8. If the alignment is unchanged, a plan will be developed in coordination with FHWA, NYSHPO, the Indian tribal representatives, and other consulting parties as appropriate, to preserve the site and protect the burial(s) before the project proceeds in this area.

9. If removal and reburial of the remains is necessary, it will be undertaken in a manner agreed to by all involved parties. Temporary disposition of the remains until reburial will be determined in consultation with the Indian tribes, and other consulting parties as appropriate.

10. Any actions relating to the treatment, disposition, removal, or reburial of human remains will comply with all applicable State and Federal laws and regulations.

---

[1] Last updated April 21, 2016.

[2] https://www.dot.ny.gov/main/business-center/engineering/specifications/updated-standard-specifications-us

[3] In Erie County, the discovery must be reported to the medical director.

Appendix D:

Project Contacts

Contact Personnel for I-81 Viaduct Project Archaeological Monitoring During Construction

Construction Project Manager (on-site) TO BE DETERMINED	Alternate TO BE DETERMINED
New York State Department of Transportation Mark Frechette, P.E. Project Director New York State Department of Transportation 333 East Washington Street Syracuse, NY 13202 315-428-4409 Mark.Frechette@dot.ny.gov Daniel P. Hitt, RLA Director, Office of Environment New York State Department of Transportation 50 Wolf Road, POD 4-1 Albany, NY 12232 518-457-4054 (Desk) 518-457-5672 (Office of Environment) Dan.Hitt@dot.ny.gov	Alternate Jonathan Adams, RLA Senior Landscape Architect New York State Department of Transportation Dulles State Office Building 317 Washington St Watertown, NY 13601 315-785-2341 Jon.Adams@dot.ny.gov Jessica Prockup Environmental Specialist Office of Environment New York State Department of Transportation 50 Wolf Road, POD 4-1 Albany, NY 12232 518-417-6642 Jessica.Prockup@dot.ny.gov
Federal Highway Administration Tricia Millington Area Engineer NY Division Tribal Nation Coordinator Federal Highway Administration Leo W. O'Brien Federal Building 11A Clinton Avenue, Suite 719 Albany, NY 12207 patricia.millington@dot.gov (518) 431-8844 Fax: (518) 431-4121	Alternate Robert M. Davies District Engineer Federal Highway Administration New York Division Leo W. O'Brien Federal Building 11A Clinton Avenue, Suite 719 Albany, NY 12207 Robert.Davies@dot.gov 518-431-8880

New York State Office of Parks Recreation and Historic Preservation John Bonafide Director, Technical Preservation Services Bureau Division for Historic Preservation Agency Historic Preservation Officer New York State Office of Parks Recreation & Historic Preservation Peebles Island State Park, PO Box 189 Waterford, New York 12188-0189 (518) 268-2166 john.bonafide@parks.ny.gov	Alternate Nancy Herter Archaeology Program Unit Coordinator New York State Parks, Recreation & Historic Preservation Peebles Island State Park, PO Box 189 Waterford, New York 12188-0189 (518) 268-2179 nancy.herter@parks.ny.gov
New York State Museum Dr. Christina Rieth New York State Archaeologist Division of Research and Collections New York State Museum 3118 Cultural Education Center Albany, NY 12230 christina.rieth@nysed.gov 518-402-5975	Alternate Dr. John P. Hart Director, Research and Collections Division New York State Museum 3140 Cultural Education Center Albany, New York 12230 john.hart@nysed.gov 518-474-5816
The Onondaga Nation Faithkeeper Anthony Gonyea DYODIHWASNYE'NHA Administration Building 4040 Route 11 Onondaga Nation via-Nedrow, NY 13120 Phone: 315-952-3109 Fax: 315-469-4717 stevethomas808@yahoo.com	Alternate Joseph Heath General Counsel 315-475-2559 Thane Joyal, Esq. 315-475-2559 thanejoyal@gmail.com
Law Enforcement Agency Onondaga County Sheriff's Office 407 S State St, Syracuse, NY 13202 315-435-3044	Alternate City of Syracuse Police Department 511 S. State Street Syracuse, NY 13202 315-442-5111

County Coroner Onondaga County Medical Examiner 100 Elizabeth Blackwell Street Syracuse, New York 13210 (315) 435-3800	Alternate N/A
Archaeological Consultant TBD	Alternate TBD

APPENDIX 3:

NYSDOT Procedures in the Event of the Inadvertent Discovery of Human Remains during Construction

2002 *Haudenosaunee Protocol for Handling Discovery of Human Remains*

APPENDIX 3

NEW YORK STATE DEPARTMENT OF TRANSPORTATION'S PROCEDURES IN THE EVENT OF THE INADVERTENT DISCOVERY OF HUMAN REMAINS DURING CONSTRUCTION[1]

1. If a burial site, human remains, or bones thought to be human remains, are encountered during construction for a New York State Department of Transportation (NYSDOT) undertaking, the work will be stopped immediately and rescheduled to avoid disturbing the area. The remains will be left in place and protected from further damage.

2. In accordance with the current NYSDOT Standard Specifications, Section 107-01 D. Archaeological Salvage[2], the Engineer-in-Charge (EIC) will, through proper channels, notify appropriate Department personnel and other authorities. The EIC will report the discovery of human remains to the local police, and the county coroner having jurisdiction, or to the medical examiner, and will arrange immediate inspection of the site[3].

3. If the site is determined to be part of a criminal investigation, the police will notify the EIC when work in the area may resume.

4. If determined that the remains are not a police issue, the NYSDOT will notify the Federal Highway Administration (FHWA), the Office of Parks, Recreation and Historic Preservation/ State Historic Preservation Office (OPRHP/SHPO), appropriate Native Nation contacts, and archaeologists, and arrange site visits accordingly. Work will be temporarily suspended in the area, and measures will be taken to secure the burial site and protect the remains from disturbance, including the placement of a twenty-five foot protective buffer around the burial site.

5. The NYSDOT will arrange for a qualified physical anthropologist to examine the remains. NYSDOT in coordination with FHWA will invite designated Native Nation representative(s) to participate in the consultation process. Representatives will be determined on the basis of established contacts and identified areas of interest for Native Nations. The remains will not be removed until determined by the qualified physical anthropologist to be non-native.

6. NYSDOT, in consultation with the OPRHP/SHPO, Native Nations and other identified Consulting Parties, will arrange for an archeologist to establish horizontal and vertical extent of the burial(s) and assess measures for avoiding the human remains if possible. The avoidance of human remains is the preferred choice.

7. Any new location or alignment developed to avoid the burial(s) will be subject to archaeological investigation, and the results will be provided to the OPRHP/SHPO, Native Nations, and other Consulting Parties as appropriate for comment before the project proceeds in this area.

8. If the alignment is unchanged, a plan will be developed in coordination with FHWA, NYSHPO, the Native Nation representatives, and other Consulting Parties as appropriate, to preserve the site and protect the burial(s) before the project proceeds in this area.

9. If removal and reburial of the remains is necessary, it will be undertaken in a manner agreed to by all involved parties. Temporary disposition of the remains until reburial will be determined in consultation with the Native Nations, and other Consulting Parties as appropriate.

10. Any actions relating to the treatment, disposition, removal, or reburial of human remains will comply with all applicable State and Federal laws and regulations.

---

[1] Last updated April 21, 2016.
[2] https://www.dot.ny.gov/main/business-center/engineering/specifications/updated-standard-specifications-us
[3] In Erie County, the discovery must be reported to the medical director.

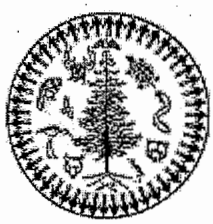

The Haudenosaunee Policies on this page are the official word of the Haudenosaunee Confederacy as promulgated by the Grand Council of Chiefs concerning cultural patrimony & repatriation.

Note:

From Kanatiyosh. The policies contain statements that are important to insure cultural sensitivity towards the Haudenosaunee. The statements are evidence of why some school projects, museums, private collections, sellers, governments, and etc., are not being culturally sensitive or respectful to the Haudenosaunee.

Haudenosaunee Policy on Human Remains

Haudenosaunee Beliefs

We have been taught that we bury our dead into the ground so that their bodies can become part of the scared Earth. We believe that we come from the Mother Earth and that the human remains that rest within the Earth are an important spiritual connection to the spirit of the Earth. The Earth is enriched by the dead as our flesh becomes part of the soil.

The souls of the dead have a path of destiny that they must follow. We refer to this as their journey after life. In this way, we feel that the dead are around us and hover over us as
we hold ceremonies or dances. We believe that the dead have power and it is dangerous to neglect the spiritual needs of the dead.

The protection of the human remains and associated graves, sacred burial sites and related objects from the graves of the Haudenosaunee are the responsibility of each generation of chiefs, clan mothers, and faithkeepers. We believe that the remains, the associated burial objects and the actual soil in which they rest is sacred. There is no acceptable excuses to justify the desecration of this sacred burial.

Violation of Our Spiritual Rights

Removing the remains from their eternal resting place is a great desecration to both the dead and the living. The disturbance, destruction, and theft of the dead is a violation of the religious and spiritual welfare of the Haudenosaunee.

As long as the human remains are disturbed, there will be spiritual consequences to our people. The desecration of the graves of our ancestors, no matter what the age of the burial, is a violation of our religious freedom.

Permits issued by the State of New York or any other local government, to allow anyone
to violate the sanctity of the graves of our ancestors can no longer be tolerated. In the past, our ancestors buried many objects along with the body with the belief that in the afterlife,
you will need all of those things that you need in this life.

All types of objects have been associated with burials, including decorated clothing, glass beads, shell beads, silver combs, tools and weapons, ceramic and metal cooking pots, wampum belts, strings of wampum, and a variety of personal items. The removal of these objects from the grave is a theft from the dead.

Violation of Our Human Rights

The remains of our dead are not "archaeological resources" that are subjects of study. They are human beings who once lived on this land. They had real lives and feelings. They had
spiritual expectations about their final resting places. To look at Native Peoples as objects rather than people is a gross violation of our human rights.

All graves and burial sites, Native or not, deserve respect. Our dead relatives deserve the basic human right to a dignified burial. We do not believe in the use of permanent headstones to mark graves of our ancestors and state law makes a difference between cemeteries and unmarked burials.

Our burial sites deserve to be considered hallowed ground, whether they are

marked or not. There has been a double standard in dealing with our people and non-Native remains. Non-Native grave sites are often afforded more protection than Native burials.

Despite the efforts of state agencies to identify Native grave locations, construction permits are issued nonetheless. Our dead deserve the same right to an eternal resting place as all other races and religions.

Violation of Our Treaty Rights

The unearthing of the remains of our ancestors from their eternal resting place is also a violation of the promises made to the Haudenosaunee under the terms of the Canandaigua
Treaty of 1794. By that treaty, the United States, including the State of New York, promised not to "disturb" the Haudenosaunee in the free use and enjoyment of their lands.

We have been on record protesting the desecration of our graves. The continual destruction of Native graves, the stealing of the Native remains and the looting of burial objects causes us serious mental, emotional, and spiritual harm.

Our people are continually upset by these events and we have been forced to adjust our spiritual traditions to accommodate outside developments. The desecration of our dead violates the mutual respect promised by the United States as they pledged a firm and permanent friendship between our peoples.

The treaty also promised to remove the cause of complaint that upsets our peace. We therefore make it clear that the desecration of the graves of our ancestors causes great harm to our people and the United States and State of New York have an obligation to protect the general welfare of our people as promised in the legally binding treaties.

4.7 Protocol for Handling Discovery of Human Remains

	Known Burials	Unidentified Burials
When to contact?	**Intentional excavation** At the earliest time in decision-making process.	**Inadvertent Discovery** Upon discovery.
Which Nation to contact?	If find is within existing Nation boundary, contact that Nation's Cultural Resource representatives. If the find is within the traditional land use area (fifty mile radius from the current nation territory, contact the closest Nation's Cultural Resource Representative. If the find is within the aboriginal territory of each nation, as shown on the attached map, contact the Nation within that territory. For finds located within fifty miles on either side of the boundary lines shown on the map, contact the Cultural Resource Representatives of both Nations.	
Who to contact?	Haudenosaunee Cultural Resource Representatives HSCBRR	Haudenosaunee Cultural Resource Representatives HSCBRR
How to contact?	Contact list is provided.	
Information Required	Brief description of the find or potential find; site map and any information on the known cultural history of the area and summary of nearby archaeological findings.	
	Nation will send a representative to review the site.	Company must hire a Native American on-site observer.
Next steps	***Non-disturbance of burials is preferred.*** If after proper consultation, the remains must be removed, we prefer to have them reburied close to their original location as possible, provided the future sanctity of the grave can be assured. ***No remains should be removed without proper cultural protocols.*** If no safe local burial ground can be offered, the Haudenosaunee will reclaim the remains for reburial at an undisclosed location. The local government /state agency/developer must pay all of the costs for such reburial. All objects associated with the original burial must be reburied as well. All of the soil in the immediate area of the burial should also be placed in the new grave.	
Time Frame	30 to 45 days	As soon as possible

2002 © Intellectual Property Rights of the Grand Council of the Haudenosaunee - Text cannot be used without the written consent of the Grand Council of the Haudenosaunee.

APPENDIX 4:

Roles and Responsibilities in Construction

APPENDIX 4
ROLES AND RESPONSIBILITIES IN CONSTRUCTION

The purpose of this appendix is to define the roles of those responsible for carrying out commitments specified in this Programmatic Agreement (Agreement).

The role of the **NYSDOT Office of Environment (OOE)** is to assist the FHWA in carrying out Section 106 responsibilities for the Project, including oversight and management of archaeological investigations, and initiating consultation regarding archaeological resources identified through machine-aided excavations and archaeological monitoring during construction among the FHWA, the SHPO, and the Onondaga Nation for Native American sites.

NYSDOT Engineer or Engineer in Charge (EIC) or his/her designee, is the Engineer representing the NYS Department of Transportation having direct supervision of the execution of the construction contract(s) under the direction of the Regional Director. The EIC or his/her designee is responsible for ensuring that construction work is stopped or slowed promptly upon request by the Archaeologist or Native Nation Monitor (if no Archaeologist is present).

NYSDOT Construction Environmental Coordinator (CEC), or equivalent, oversees the work of the Archaeologist on the construction site and coordinates workflows with the Construction Group and Office of Environment.

NYSDOT (Regional) Operations, or equivalent, will provide equipment and necessary personnel to assist in the machine-aided archaeological survey work.

Archaeological Consultant (Archaeologist) is the individual, firm, or corporation hired by the NYSDOT to provide professional archaeologists, including a Principal Investigator meeting the Secretary of the Interior's Professional Qualifications Standards for Archaeology (36 CFR Part 61) with demonstrated experience on projects of a similar scale and complexity, including supervisory experience for archaeological monitoring during construction in urban areas. Regional experience in the archaeology of central New York is preferred.

The Archaeological Consultant will provide qualified personnel required to perform the work as specified in the *Phase IB Archaeological Survey Work Plan: Plan for Phase IB Archaeological Survey and Archaeological Monitoring during Construction Including Data Recovery*, October 2017 (*Phase IB Work Plan*) and the approved Construction Phase Archaeological Work Plan. The staff required to perform the work will include, at a minimum, a Principal Investigator and team including the following positions:

- **Principal Investigator (PI)**: The PI will be responsible for the archaeological research, fieldwork and monitoring and for preparing and submitting archaeological reports. All archaeological investigators and Native Nation Monitor(s) will be under the direct supervision of the PI.

- **Crew Chief(s)**: Under the direction of the PI, one or more Crew Chiefs will be responsible for the daily on-site supervision of archaeological Field Technicians for machine-aided testing and monitoring during construction, and for coordinating archaeological investigations with the EIC or his/her designee, Construction Contractor and/or subcontractors. In addition, the Crew Chiefs will ensure that the EIC or his/her designee is promptly informed of and approves any request for a temporary halt in construction, whether requested by the Archaeologist or the Native Nation Monitor(s), as per the approved *Phase IB Work Plan,* to allow the Archaeologist and Native Nation Monitor(s) to examine potential cultural materials and features.

- **Field Technician (FT)**: The FT will assist in the field and laboratory for processing artifacts. All work by the FT will be performed under the direct supervision of the Crew Chief.

Onondaga Nation Designated Section 106 Representatives are the individuals included on the "List of Federally-Recognized Tribal Contacts for Section 106 Consultation for NYSDOT-FHWA projects".

Native Nation Monitor(s) will be selected and provided by the Onondaga Nation and will work in coordination with the Archaeologist as part of the team responsible for machine-aided testing and archaeological monitoring during construction, as identified in the approved *Phase IB Work Plan*. The Native Nation Monitor(s) will communicate to the Crew Chief or the PI (if on-site) any request for a temporary halt in construction to examine potential cultural materials, features, or human remains.

The Native Nation Monitor(s) will be responsible for coordinating monitoring activities with the EIC or his/her designee, Construction Contractor and/or subcontractors in locations where the FHWA has determined Native Nation monitoring is warranted outside of archaeological monitoring during construction.

Construction Contractor is the individual, firm, or corporation undertaking the execution of the construction work under the terms of the contract and acting directly or through his, her, their, or its agents or employees. The Contractor is responsible for facilitating the archaeological investigations.

Construction Manager is the Construction Contractor's designated representative who leads construction activities of the Contract, including overall construction oversight, assignment of the construction workforces, and coordination of the construction workforces.

Equipment Operator is the person(s) operating construction equipment.

APPENDIX 5:

Native Nation Consultation

APPENDIX 5
NATIVE NATION CONSULTATION

The Federal Highway Administration (FHWA) in coordination with the New York State Department of Transportation (NYSDOT) will carry out Section 106 consultation with the New York State Historic Preservation Office (SHPO), the Advisory Council on Historic Preservation (ACHP), and the Onondaga Nation through the final design and construction phases of the Project to complete the identification and evaluation of archaeological resources within the Project's Area of Potential Effects (APE), and to consider measures to avoid, minimize or mitigate potential adverse effects on any National Register (NR) eligible archaeological resources identified through machine-aided excavation and archaeological monitoring during construction.

The NYSDOT will inform the SHPO, FHWA, and Onondaga Nation of any design modifications or changes in scope as the Project progresses through Final Design and Construction and will make a good faith effort to provide timely and informative communication during the Construction phases of the Project.

Native Nation Monitors

In addition to consultation with the Onondaga Nation's Designated Section 106 Representatives (Onondaga Nation), the NYSDOT will establish procedures to ensure that the Native Nation Monitors selected by the Onondaga Nation are provided opportunities to fully engage in future archaeological investigations for the Project, as outlined in the approved *Phase IB Archaeological Survey Work Plan: Plan for Phase IB Archaeological Survey and Archaeological Monitoring during Construction Including Data Recovery*, October 2017 (*Phase IB Work Plan*) and approved *Construction Phase Archaeological Work Plan.* The FHWA and NYSDOT defer to the Onondaga Nation to designate Native Nation Monitor(s) at their discretion. The individual(s) selected by the Onondaga Nation to serve as Native Nation Monitors are not required to meet the standards defined in Stipulation II A of the Agreement.

In the event that the Onondaga Nation chooses not to provide Native Nation Monitor(s) for machine-aided testing or archaeological monitoring during construction or if Native Nation Monitor(s) are unavailable to perform monitoring activities at any/all locations, Section 106 commitments for upcoming archaeological investigations can be fully met by the NYSDOT through the utilization of professional archaeologists meeting the Secretary of the Interior's Professional Qualification Standards for Archaeology (36 CFR Part 61) (henceforth referred to as "Archaeologist").

Both the Archaeologists and Native Nation Monitor(s) will have access to areas that are deemed by the NYSDOT Engineer in Charge (EIC) or his/her designee to be safe locations for non-construction personnel for the purpose of archaeological monitoring at construction sites identified in the approved *Construction Phase Archaeological Work Plan.* Based on their knowledge of Haudenosaunee culture, the Native Nation Monitors will work in coordination with the Archaeological Consultant's team to identify any Native American cultural artifacts, either because they are potentially National Register eligible, as per Section 106 of the National Historic Preservation, or because they are potentially related to human remains or indicative of a burial site. As part of this coordinated effort, the Native Nation Monitors will inform the Archeologist on site of any request for the Construction Contractor(s) to halt or slow work for closer inspection of potential Haudenosaunee cultural artifacts or human remains. The Archaeologist will

promptly convey the Native Nation Monitor's request to the EIC or his/her designee, who will ensure that the requested action is taken. The Native Nation Monitors will also inform the Archaeologist when coordination with the Onondaga Nation may be needed before recommending further investigation of intact archaeological deposits or upon the discovery of a potential burial site.

Though it will be up to the Onondaga Nation to establish its own internal procedures for coordination with the Native Nation Monitors in the field, the NYSDOT will contact the Onondaga Nation's Designated Section 106 Representatives to provide updates for work in progress including an end of field letter and draft Phase IB Archaeology Survey Report for each construction area identified for archaeological monitoring. As part of ongoing Section 106 consultation, the NYSDOT, in coordination with FHWA and in consultation with the SHPO, will consider the Onondaga Nation's comments and recommendations before approving and distributing final reports as specified in Stipulation IV of the Agreement.

On Site Requirements for Native Nation Monitors

The Native Nation Monitors, as well as Archaeologists, will be required to follow certain procedures and protocols during construction.

- The Native Nation Monitor(s) will follow the health and safety plan for the Project under the oversight of the EIC or his/her designee of the construction site.
- The Native Nation Monitor(s) will monitor locations in accordance with the approved *Phase IB Work Plan* and approved *Construction Phase Archaeological Work Plan* and will not direct the contractor to conduct field operations for the purposes of archaeological investigation at new locations.
- The Native Nation Monitor(s) will report to the established construction field office or other location as specified by the EIC or his/her designee daily and attend the Construction Contractor meeting(s) as requested and at a frequency established by the Construction Contractor(s), to learn about the scope of work and location of work planned for each day/week.
- If the Native Nation Monitor(s) fails to report to the construction site on time as specified by the EIC/Construction Manager or his/her designee, construction activities will progress as scheduled, and the Native Nation Monitor(s) may be restricted from accessing the construction site until the EIC/Construction Manager or his/her designee determines it is safe to do so.
- The Native Nation Monitor(s) will document work conducted each day, including but not limited to information such as a description of the work conducted each day at each location, the hours worked, and the tasks performed. The daily work report will include the location monitored and the presence or absence of any cultural materials encountered. The daily report will be shared with the EIC/Construction Manager or his/her designee, NYSDOT OOE, and the Archaeologist.

Compensation

The Onondaga Nation will be compensated for the services of Native Nation Monitor(s) through a separate contractual agreement and will receive payment under the terms of that agreement. A sample contract is included in **Appendix 8** of this Agreement.

- As determined by the FHWA, payments to the Onondaga Nation for archaeological monitoring services as reported to the EIC/Construction Manager or his/her designee, NYSDOT OOE, and the Archaeologist are eligible for federal reimbursement.
- In addition, the cost of assistance as needed for the relocation and reinterment of human remains determined or presumed to be Native American are eligible for federal reimbursement.

Timeframes for Archaeological Field Investigations

As indicated in the approved *Phase IB Archaeological Survey Work Plan: Plan for Phase IB Archaeological Survey and Archaeological Monitoring during Construction Including Data Recovery*, October 2017 (*Phase IB Work Plan*), machine-aided testing, particularly in areas that require the removal of existing pavement, will be scheduled to begin immediately prior to the start of construction at each designated location for the purpose of minimizing disruption to existing land use and community activities. Archaeological field investigations for machine-aided testing and archaeological monitoring during construction will proceed in accordance with the timeframes specified in the approved *Phase IB Work Plan* and the approved *Construction Phase Archaeological Work Plan.*

As defined in the NYSDOT Standard Specifications, Section 101-02 Definitions of Terms:

> **Calendar Day** means "every day shown on the calendar", and a
>
> **Work Day** means "a calendar day, on which weather and other conditions not under the control of the Contractor, will permit construction operations on the principal item or items of work which would normally be in progress at that time to proceed for the major part of the day."

For the purposes of this Agreement, timeframes are noted in calendar days, unless otherwise specified.

Machine-Aided Testing

The Native Nation Monitor(s) will provide timely input to assist the Archaeologist in the field identification of Native American cultural artifacts and features.

- If no archaeological resources are identified by machine-aided testing, the Archaeologist will submit an end-of-field (EOF) letter to the NYSDOT within two (2) weeks of the completion of fieldwork. The NYSDOT will provide the EOF letter to the SHPO, Onondaga Nation, and FHWA with a request for review and comments within fifteen (15) days.
- If the Archaeologist, in coordination with the Native Nation Monitor(s), recommends additional investigation of one or more archaeological sites to determine National Register eligibility, the Archaeologist will be allowed up to five (5) additional days to prepare and submit to NYSDOT a Phase II Work Plan for each site. The NYSDOT will provide the EOF letter and Phase II Work Plan(s) to the SHPO, Onondaga Nation, and FHWA with a request for review and comments within thirty (30) calendar days.
- The Archaeologist will begin Phase II field investigations immediately upon approval of the Phase II Work Plan(s) by the NYSDOT and will complete the fieldwork for each site within twenty (20) work days of approval. The Archaeologist will conduct Phase II investigations in coordination with

Native Nation Monitor(s) for Native American sites, or Native American components of multicomponent sites, but may proceed with Phase II fieldwork on schedule if the Native Nation Monitor(s) is not present.

Archaeological Monitoring during Construction

The timing of archaeological monitoring during construction will be determined by construction schedules for each construction phase of the Project. Protocols for archaeological monitoring during construction are depicted in the attached flowchart (**Attachment 1**) and described below:

- If the Archaeologist, in coordination with the Native Nation Monitor(s) identifies potential cultural artifacts or features exposed by construction activity, the Archaeologist will request a temporary suspension of work limited to one hour for each area within an approximately 20-foot (6.1-meter) radius for initial inspection of the open excavation.
- Following initial inspection, if the Archaeologist in coordination with the Native Nation Monitor(s) identifies the potential cultural artifact(s) or feature(s) to be modern or to be historic with no potential to meet the criteria for National Register eligibility, the Archaeologist will notify construction personnel that work can continue.
- If the cultural material is identified as potentially National Register eligible, the Archaeologist may request an extension of the work stoppage to further evaluate the cultural material in coordination with the Native Nation Monitor(s). The extension may last up to, but no longer than four hours, not including the one hour for initial inspection. Immediately upon completing this evaluation of the cultural material, the Archaeologist will notify the NYSDOT Office of Environment (OOE) with a preliminary assessment of National Register eligibility.
- The timeframe outlined above would not apply if the Archaeologist in coordination with the Native Nation Monitor(s) identifies the presence of human remains, or potential remains. In that case, the temporary work stoppage would last substantially longer to allow time for consultation among the SHPO, Onondaga Nation, FHWA, and NYSDOT to determine appropriate next steps.
- If the Archaeologist, in coordination with the Native Nation Monitor(s), recommends additional investigations to determine National Register eligibility, the Archaeologist will notify the NYSDOT, and the NYSDOT will consult with the SHPO, Onondaga Nation, and FHWA. If approved, sampling or recovery efforts will be limited to eight hours for each individually identified resource, including Native American cultural artifacts. In the case of exposed canal or canal-related features, eight hours per 50 linear feet (15 meters) will be allowed.
- The Archaeologist will implement Data Recovery procedures immediately upon approval by the NYSDOT if the site is determined National Register eligible and Data Recovery is the agreed-upon course of action as determined though consultation among the SHPO, Onondaga Nation, FHWA, and NYSDOT. Once initiated, the Archaeologist (in coordination with Native Nation Monitor(s) for Native American sites) will complete Data Recovery activities at each site within no more than 15 work days of the start of Data Recovery fieldwork, or as specified in the approved Archaeological Data Recovery Plan and Stipulation VI of this Agreement.

The Archaeologist, in coordination with the Native Nation Monitor(s), will submit an EOF letter to the NYSDOT within five (5) days of the completion of Data Recovery fieldwork. The NYSDOT will provide the EOF letter to the SHPO, Onondaga Nation, and FHWA with a request for comments on the preliminary results, recommendations, and timeframe for the preparation of a Phase III Data Recovery report within 15 calendar days of receiving the EOF letter.

Section 106 Consultation

Archaeological Resources

The formal identification and evaluation of archaeological resources will be conducted through consultation among the SHPO, FHWA, NYSDOT, and the Onondaga Nation's designated Section 106 representatives, based on information provided by the Archaeologist in coordination with the Native Nation Monitor(s) in EOF letters and reports.

- During ongoing field investigations for machine-aided testing and archaeological monitoring during construction, the NYSDOT will provide EOF letters and Phase II Work Plans to the SHPO, Onondaga Nation, and FHWA for a 15-day review and comment period.
- Following the end of fieldwork, the NYSDOT will provide draft Phase IB and Phase III Data Recovery reports to the SHPO, Onondaga Nation, and FHWA for a 30-day review and comment period.

Potential Discovery of Human Remains

Based on the results of research conducted for the *Phase IA Archaeological Sensitivity Assessment,* September 2016 and through consultation with the Onondaga Nation, the approved *Phase IB Work Plan* documents the potential for Native American human remains within the Project's APE. The Onondaga Nation advised that all areas along the historic alignment of Onondaga Creek and other historic watercourses should be considered sensitive for the potential to contain human burials. As a result, the sampling strategy for machine-aided testing in advance of construction, as outlined in the approved *Phase IB Work Plan*, includes locations along the historic alignment of Onondaga Creek to determine if potential human burials, or other archaeological resources, are present in these areas.

In addition, the Onondaga Nation noted the potential for partial human remains to be present in fill material transported from other areas to locations throughout the APE which have not been specifically identified as areas of sensitivity. With the assistance of Archaeologists and Native Nation Monitors, the NYSDOT will take precautions to ensure that any human remains that may be encountered during construction are properly identified and protected from further disturbance until appropriate actions are determined through consultation among the Onondaga Nation, SHPO, FHWA, and NYSDOT.

- Any human burial site, human remains, or potential human remains discovered during machine-aided archaeological testing or during construction will be treated with dignity and respect.
- Upon the discovery of human remains or potential human remains, the NYSDOT has an obligation to report the discovery to the appropriate legal authorities. The NYSDOT has no jurisdiction over the burial site until those officials have determined that the remains do not warrant further investigation on their part.

- If the Archaeologist, in coordination with the Native Nation Monitors, reports the discovery of human remains, or potential human remains, to the NYSDOT during machine-aided testing or archaeological monitoring during construction, the NYSDOT OOE will immediately notify the SHPO, FHWA and the Onondaga Nation's designated Section 106 representatives.
- The NYSDOT OOE will also contact the SHPO, FHWA and the Onondaga Nation's Designated Section 106 Representatives if the NYSDOT EIC or his/her designee and/or Construction Environmental Coordinator (CEC) reports the discovery of human remains, or potential human remains, during construction in any location where there is no Archaeologist or Native Nation Monitor present.
- Following the *NYSDOT Procedures in the Event of the Inadvertent Discovery of Human Remains during Construction* (**Appendix 3**) and the *2002 Haudenosaunee Protocol for Handling Discovery of Human Remains* [(hereafter "2002 Haudenosaunee Protocol") **Appendix 3**], the FHWA, in coordination with the NYSDOT, will carry out consultation with the Onondaga Nation and the SHPO to consider measures to avoid, minimize, or mitigate effects on any intact burial site and to consider appropriate treatments for human remains or partial human remains discovered in fill material or disturbed soils. Avoidance is the preferred option to the extent practicable.
- The above-referenced timeframes for Section 106 consultation during construction will not apply to consultation to determine an agreed-upon course of action following the discovery of a human burial site or confirmed human remains.
- If requested by the Onondaga Nation, the FHWA and the NYSDOT will assist the Onondaga Nation in the relocation and reinterment of human remains determined or presumed to be Native American.

The NYSDOT will treat all information regarding the discovery of human remains as confidential and will not release information regarding the discovery or reburial of human remains to the public.

ATTACHMENT 1: ARCHAEOLOGICAL MONITORING DURING CONSTRUCTION PROCESS

STEP 1: IDENTIFICATION	Archaeological Monitoring will be conducted during construction activities in areas identified in the approved *Phase IB Work Plan* and *Construction Phase Archaeological Work Plan*.	If no potential cultural artifacts or features exposed by construction activity, then construction will proceed. Results will be memorialized in *Daily Work Reports*.		If potential cultural artifacts or features exposed by construction activity, **go to Step 2: Initial Inspection**.
STEP 2: INITIAL INSPECTION	If potential cultural artifacts or features exposed by construction activity, the Archaeologist will request a temporary suspension of work limited to **1 hour** for each location.	If the Archaeologist in coordination with the Native Nation Monitor(s) identifies the potential cultural resource to be modern or otherwise have no potential to meet the criteria for National Register of Historic Places (NRHP) eligibility, then construction will proceed. Results will be memorialized in *Daily Work Reports*.**		If the cultural material is identified as potentially NRHP eligible, **go to Step 3: Further Evaluation**.
STEP 3: FURTHER EVALUATION OF NRHP ELIGIBILITY	The Archaeologist may request an extension of the work stoppage to further evaluate the cultural material in coordination with the Native Nation Monitor(s). The extension may last up to, but no longer than **4 hours**, not including the one hour for initial inspection.	Immediately upon completing this evaluation, the Archaeologist will notify the NYSDOT Office of Environment (OOE) with a preliminary assessment of National Register eligibility. The NYSDOT will consult with the SHPO, Onondaga Nation, and FHWA.**	If the cultural material is determined to not meet the Criteria for National Register Eligibility, then construction will proceed. Results will be memorialized in *Daily Work Reports*.	If additional investigation is required to further evaluate National Register Eligibility, **go to Step 4: Additional Investigation**.
STEP 4: ADDITIONAL INVESTIGATION & NRHP ELIGIBILITY DETERMINATION	If additional investigation is required to further evaluate National Register Eligibility, sampling or recovery efforts will be limited to **8 hours** for each individually identified resource. In the case of exposed canal or canal-related features, eight hours per 50 linear feet (15 meters) will be allowed.	Immediately upon completing this evaluation of the cultural material, the Archaeologist will notify the NYSDOT Office of Environment (OOE) with a preliminary assessment of NRHP eligibility. The NYSDOT will consult with the SHPO, Onondaga Nation, and FHWA. **	If the cultural material is determined to not meet the Criteria for NRHP eligibility, then NYSDOT will consult with the SHPO, Onondaga Nation, and FHWA. If parties concur, construction will proceed. Results will be memorialized in Daily Work Reports.**	If the cultural resource is determined to be NRHP eligible, go to **Step 5: Consultation and Treatment Plan**.
STEP 5: CONSULTATION & TREATMENT PLAN	If the FHWA determines that the Project may have an adverse effect on a NRHP eligible archaeological resource, the FHWA, in coordination with the NYSDOT, will consult with the SHPO, and with the Onondaga Nation for Native American sites, to explore measures to avoid, minimize, or mitigate adverse effects. **	If adverse effects cannot be avoided, and it is determined through consultation that Data Recovery is an appropriate treatment, the NYSDOT will direct the Archaeologist to prepare an Archaeological Data Recovery Plan (DRP) for each affected property. **Go to Step 6: Data Recovery.**	If adverse effects cannot be fully avoided, and Data Recovery is not determined appropriate, the FHWA will continue consultation to determine alternate mitigation and will prepare an archaeological treatment plan for each site.	The FHWA, in coordination with NYSDOT, will distribute the treatment plan or DRP for a 15-calendar day review and comment by the SHPO, and by the Onondaga Nation for Native American sites. **
STEP 6: DATA RECOVERY	The Archaeologist will implement Data Recovery procedures as soon as feasible upon approval of the DRP. Once initiated, the Archaeologist (in coordination with Native Nation Monitor(s) for Native American sites) will complete Data Recovery activities in accordance with the DRP.	The Archaeologist, in coordination with the Native Nation Monitor(s), will submit an EOF letter to the NYSDOT within five (5) days of the completion of Data Recovery fieldwork. The NYSDOT will provide the EOF letter to the SHPO, Onondaga Nation, and FHWA within 15 calendar days of receiving the EOF letter.	If parties concur with the findings in the EOF Letter, construction will proceed.**	As specified in the approved DRP, the Archaeologist will prepare a Phase III Data Recovery report following the resumption of construction activities.

* **HUMAN REMAINS:** The timeframe outlined above would not apply if the Archaeologist in coordination with the Native Nation Monitor(s) identifies the presence of human remains, or potential remains. In that case, the temporary work stoppage would last substantially longer to allow time for consultation among the SHPO, Onondaga Nation, FHWA, and NYSDOT to determine appropriate next steps.

** **DISPUTE RESOLUTION FOR ATTACHMENT 1:** At different steps in this process there are points of consultation between NYSDOT, SHPO, Onondaga Nation, ACHP, and FHWA. Should there not be agreement between all parties at decision-making points, all parties will follow the below process for dispute resolution.

Should any party object via electronic notification or phone to FHWA, regarding the manner in which the terms of Attachment 1 are carried out, FHWA will immediately notify the other signatory parties of the objection and proceed to consult with the objecting party to resolve the objection. FHWA will honor the request of any signatory party to participate in the consultation and will take any comments provided by such parties into account. The FHWA shall establish a reasonable time frame for such consultations.

If the objection is resolved through consultation, FHWA may authorize the disputed action to proceed in accordance with the terms of such resolution. FHWA shall take into account any comments from the other signatory parties to Attachment 1 in reaching a final decision regarding the objection. FHWA's responsibility to carry out all actions under this Agreement that are not the subjects of the objection shall remain unchanged. FHWA shall provide all other signatory parties to this Attachment with an electronic copy of its final decision regarding any objection addressed pursuant to this Attachment.

APPENDIX 6:

Coordination and Communication Protocols in Construction

Protocols for Communication in Construction (Flowchart)

APPENDIX 6
COORDINATION AND COMMUNICATION PROTOCOLS IN CONSTRUCTION

The purpose of this appendix is to establish protocols for coordination and communication among the Archaeologist, Native Nation Monitor(s), Engineer in Charge (EIC), and Equipment Operator during machine-aided testing and archaeological monitoring during construction, as specified in the approved *Phase IB Archaeological Survey Work Plan: Plan for Phase IB Archaeological Survey and Archaeological Monitoring during Construction Including Data Recovery*, October 2017 (*Phase IB Work Plan*) and approved *Construction Phase Archaeological Work Plan.* Based on available information, the Project will be constructed under multiple construction contracts over a six-year period, with the potential for overlapping construction phases and ongoing construction activities in multiple locations at any given time.

To ensure that commitments made in the Programmatic Agreement (PA) are met, the Archaeologists and Native Nation Monitor(s) will work in cooperation with the New York State Department of Transportation (NYSDOT) and the Construction Contractor to implement effective communication protocols, both before and during construction of the Project. The NYSDOT will defer to the Onondaga Nation Designated Section 106 Representatives (Onondaga Nation) to coordinate with their designated Native Nation Monitor(s) to inform them of when the work is scheduled to begin.

Machine-Aided Testing

To the extent possible, machine-aided testing will be carried out in advance of construction and implemented in priority order based on the Project's construction phasing and anticipated schedule, with the goal of completing machine-aided testing prior to the start of construction in that area. The NYSDOT OOE will provide notification regarding construction milestones to the Archaeologist and the Onondaga Nation as the information becomes available, as specified in Stipulation IV.C. of this Agreement. Milestones may include, but are not limited to, the geographical division of construction contracts, planned progression of construction phasing, estimated timeframe for each construction contract, award of construction contracts, and construction start dates. Estimated timelines for construction will be subject to change depending on the construction start date(s) and conditions during the construction period. As the NYSDOT gains access to locations for testing, the Office of Environment (OOE) will notify the Archaeologist and the Onondaga Nation of the general location(s) of machine-aided testing two weeks in advance, with a specific location update no less than 12 hours prior to ground-breaking. The NYSDOT will defer to the Onondaga Nation to notify Native Nation Monitor(s) when the work is scheduled to begin.

If human remains (or potential human remains) are encountered during machine-aided testing, the NYSDOT OOE, in coordination with the Federal Highway Administration (FHWA), will contact the New York State Historic Preservation Office (SHPO) and the Onondaga Nation to initiate consultation in accordance with the *NYSDOT Procedures in the Event of the Inadvertent Discovery of Human Remains during Construction* (**Appendix 3**) and the 2002 *Haudenosaunee Protocol for Handling Discovery of Human Remains* (**Appendix 3**).

Communication Prior to Construction

The NYSDOT OOE will provide notification regarding construction milestones to the Archaeologist and the Onondaga Nation as the information becomes available, as specified in Stipulation IV.C. of this Agreement.

Milestones may include, but are not limited to, the geographical division of construction contracts, planned progression of construction phasing, estimated timeframe for each construction contract, award of construction contracts, and construction start dates. Estimated timelines for construction will be subject to change depending on the construction start date(s) and conditions during the construction period.

Prior to the start of construction, the NYSDOT will implement standard practices, including holding a preconstruction meeting and an environmental preconstruction meeting to inform the Construction Contractor(s) about environmentally sensitive areas, including potential cultural resources. The Archaeologist and Native Nation Monitors will be invited to attend the meeting. Topics for discussion will include a discussion of the requirements and considerations for archaeological monitoring as described in the Section 106 Programmatic Agreement, the approved *Construction Phase Archaeological Work Plan(s),* and construction plans and associated special notes for the Project. In addition, the preconstruction meeting will include a discussion of the communication protocol specified in the NYSDOT Standard Specifications, Section 107-01 - Laws, Rules, Regulations and Permits, D. Archeological Salvage*:*

> "Whenever, during the course of construction, historical or prehistoric objects or human remains are encountered, such objects shall not be destroyed or moved. The Construction Contractor shall stop work to avoid disturbing such areas and notify the Engineer immediately.
>
> The Engineer will notify the appropriate Department personnel and other authorities and arrange to have an immediate inspection of the site conducted."

At the preconstruction meeting or prior to the start of the applicable construction activities, and subject to approval by the EIC or his/her designee, the NYSDOT will provide information on the Construction Contractor's proposed schedules and methods of construction for areas identified in the *Construction Phase Archaeological Work Plan*(s). This information may include details such as the schedule, sequence of operations, materials, equipment, and excavation support systems to allow the Archaeologist to plan for implementation of the approved *Construction Phase Archaeological Work Plan*.

To facilitate scheduling for archaeological and Native Nation monitoring during construction, the NYSDOT OOE will provide notice to the Archaeologist and to the Onondaga Nation at least one week in advance of the scheduled start of construction in areas subject to archaeological monitoring. The NYSDOT will defer to the Onondaga Nation to notify Native Nation Monitor(s) when the work is scheduled to begin. Once construction is underway, the NYSDOT EIC or his/her designee or the Construction Contractor will provide weekly updates of the schedule for upcoming construction in areas identified for archaeological monitoring or Native Nation monitoring.

The Construction Contractor will review the applicable approved *Construction Phase Archaeological Work Plan* as well as the construction monitoring locations identified on the plan sheets before the start of construction at those locations.

Communication Protocols during Construction

Archaeological monitoring during construction requires the Archaeologist and Native Nation Monitors to work in close coordination with the Construction Manager, the Equipment Operator, and the EIC or his/her designee, who will have oversight of the construction site(s) and will ensure compliance with on

site safety protocols. Protocols for communication during construction are depicted in the attached flowchart (**Attachment 2**).

- The EIC or his/her designee in coordination with the Construction Contractor will notify the Archeologists and the Native Nation Monitor(s) in advance of the location and planned construction activities for the day within a timeframe and in the manner agreed upon during the preconstruction meeting. This notice may include a request to check in at the field office at a specified time. If the Archaeologists or the Native Nation Monitor(s) fail to report to the field office or other previously determined location by the time specified, the EIC or his/her designee / Construction Manager may proceed with the day's planned construction activities without the presence of the Native Nation Monitor(s), provided the EIC or his/her designee and/or the Construction Contractor have contacted the Onondaga Nation as specified herein.
- The EIC or his/her designee may direct the movement and actions of the Archaeologists and Native Nation Monitor(s) to ensure that safety standards and protocols are maintained while observing construction excavations and entering trenches to inspect potential archaeological resources.

The Archaeologist will coordinate, collaborate, and exchange views with Native Nation Monitors as part of the team, as described in this **Appendix 5: Native Nation Consultation**. The Native Nation Monitor(s) will provide input to the Archaeologist on the field identification of potential Haudenosaunee cultural artifacts, features, or potential human remains encountered and may also make recommendations for the Archaeologist to request a temporary halt in construction activities.

The Archaeologist, specifically the Principal Investigator or Crew Chief on site, will serve as the point-of-contact for coordination with the EIC or his/her designee, Construction Manager, or Equipment Operator for the purpose of communicating requests to halt or slow construction in a specific location to allow for the inspection of potential archaeological resources or cultural materials, further investigations, or documentation of identified archaeological features or sites, as outlined in the approved *Phase IB Work Plan* and approved *Construction Phase Archaeological Work Plan.* The Onondaga Nation will designate a single point-of-contact for coordination with the EIC or his/her designee, Construction Manager, or Equipment Operator for the purpose of communicating requests to halt or slow construction in a specific location to allow for the inspection of potential archaeological resources or cultural materials in areas designated only for Native Nation Monitoring.

The Crew Chief will ensure that the EIC or his/her designee is fully informed and approves any request for a temporary halt in construction, whether requested by the Archaeologist or the Native Nation Monitor(s), as per the approved Phase IB Work Plan, to allow the Archaeologist and Native Nation Monitor(s) to examine potential cultural materials and features.

The Archaeologist will clearly communicate to the EIC or his/her designee or the Construction Contractor(s) when work may resume or if further delay is anticipated pending coordination with the NYSDOT OOE for consultation with the SHPO, the Onondaga Nation, and the FHWA. At the close of business each work day, the Native Nation Monitor(s) will submit a daily work report to the Construction Contractor, the NYSDOT OOE and the Archaeologist, following a format specified in the terms of the contractual agreement for the compensation of Native Nation Monitors.

The Archaeologist will share with the Native Nation Monitor(s) the results of archaeological monitoring at any location for which the Native Nation Monitor(s) are not present on site. The method of communication (phone, email) will be determined through mutual agreement by the Archaeologist and Native Nation Monitor(s) prior to the start of construction.

Potential Discovery of Human Remains during Construction

- The EIC or his/her designee, in coordination with the Construction Manager and Equipment Operator, will follow procedures outlined in the *NYSDOT Procedures in the Event of the Inadvertent Discovery of Human Remains during Construction* (**Appendix 3**) and the 2002 *Haudenosaunee Protocol for Handling Discovery of Human Remains* (**Appendix 3**) if human remains or potential human remains are encountered as a result of archaeological monitoring during construction. A list of names and contact information, example found in **Appendix 7** of this Agreement, will be provided at the preconstruction meeting for this purpose.
- When notified of the discovery of human remains, the NYSDOT OOE, in coordination with FHWA, will contact the SHPO and the Onondaga Nation to initiate formal consultation. The NYSDOT OOE will also contact the SHPO and the Onondaga Nation in the event of an unanticipated discovery reported by the EIC or his/her designee in any location where there is no Archaeologist or Native Nation Monitor present as stipulated in Stipulation IV.B.

ATTACHMENT 2: PROTOCOLS FOR COMMUNICATION IN CONSTRUCTION*

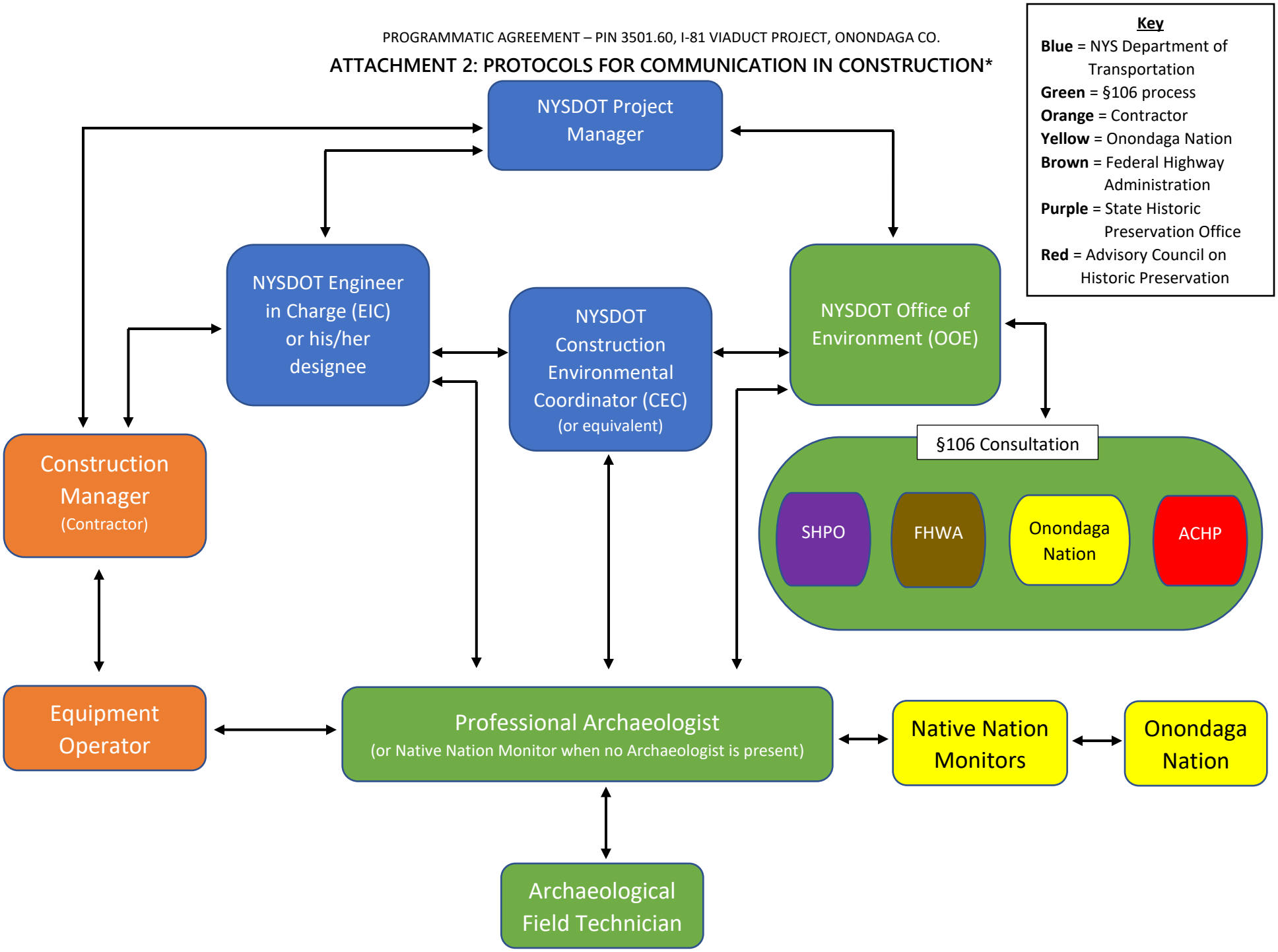

**This attachment was developed to identify the protocols for communication in construction as it relates to satisfying the stipulations as set forth in the Section 106 Programmatic Agreement for the Project in areas of archaeological monitoring during construction and does not necessarily represent the chain of command or employment structure.*

APPENDIX 7:

Contacts

APPENDIX 7
CONTACTS ARCHAEOLOGICAL MONITORING DURING CONSTRUCTION

NYSDOT Project Director	
Name: _____ I-81 Viaduct Project, Project Director New York State Department of Transportation 333 East Washington Street Syracuse, NY 13202 Phone Number: _____ Email Address: _____	
NYSDOT Construction	
Name: _____ Regional Construction Engineer, Region 3 New York State Department of Transportation 333 East Washington Street Syracuse, NY 13202 Phone Number: _____ Email Address: _____	Name: _____ Engineer in Charge, I-81 Viaduct Project New York State Department of Transportation 333 East Washington Street Syracuse, NY 13202 Phone Number: _____ Email Address: _____
NYSDOT Office of Environment (OOE)	
Name: _____ Director, Office of Environment New York State Department of Transportation 50 Wolf Road Albany, NY 12232 Phone Number: _____ Email Address: _____	Name: _____ Project Cultural Resource Coordinator Office of Environment New York State Department of Transportation 50 Wolf Road Albany, NY 12232 Phone Number: _____ Email Address: _____
NYSDOT Construction Environmental Coordinator (CEC), or equivalent	
Name: _____ Construction Environmental Coordinator New York State Department of Transportation 333 East Washington Street Syracuse, NY 13202 Phone Number: _____ Email Address: _____	

DRAFT

Federal Highway Administration	
Name: _____ District Engineer Federal Highway Administration – NY Division Leo W. O'Brien Federal Building 11A Clinton Avenue, Suite 719 Albany, NY 12207 Phone Number: _____ Email Address: _____	Name: _____ Area Engineer Federal Highway Administration – NY Division Leo W. O'Brien Federal Building 11A Clinton Avenue, Suite 719 Albany, NY 12207 Phone Number: _____ Email Address: _____
New York State Office of Parks Recreation and Historic Preservation	
Name: _____ Director, Technical Preservation Services Bureau Division for Historic Preservation Agency Historic Preservation Officer New York State Office of Parks Recreation & Historic Preservation Peebles Island State Park, PO Box 189 Waterford, New York 12188-0189 Phone Number: _____ Email Address: _____	
New York State Museum	
Name: _____ New York State Archaeologist Division of Research and Collections New York State Museum 3118 Cultural Education Center Albany, NY 12230 Phone Number: _____ Email Address: _____	Name: _____ Director, Research and Collections Division New York State Museum 3140 Cultural Education Center Albany, New York 12230 Phone Number: _____ Email Address: _____

DRAFT

Onondaga Nation	
Faithkeeper Anthony Gonyea DYODIHWASNYE'NHA Administration Building 4040 Route 11 Onondaga Nation via-Nedrow, NY 13120 Phone Number: _____ Email Address: _____	Joseph Heath General Counsel 315-475-2559 Name: _____ Phone Number: _____ Email Address: _____
Law Enforcement Agency	
Onondaga County Sheriff's Office 407 S State St, Syracuse, NY 13202 315-435-3044	City of Syracuse Police Department 511 S. State Street Syracuse, NY 13202 315-442-5111
County Coroner	
Onondaga County Medical Examiner 100 Elizabeth Blackwell Street Syracuse, New York 13210 (315) 435-3800	
Archaeological Consultant	
Name: _____ Archaeologist, I-81 Viaduct Project Firm: _____ Address: _____ _____ _____ Phone Number: _____ Email Address: _____	

DRAFT

APPENDIX 8:
Sample Contract

NEW YORK STATE DEPARTMENT OF TRANSPORTATION
STATE RAILROAD AGREEMENT

AGREEMENT TO REIMBURSE COSTS FOR CHANGES OF FACILITIES
AND
FOR ENTRY UPON LANDS

AGREEMENT NUMBER _____

This Agreement made this _____ by and between: **The People of The State of New York** (hereinafter called "STATE"), acting by and through the Commissioner of Transportation (hereinafter called "COMMISSIONER"), whose office is the Department of Transportation Administration and Engineering Building, 50 Wolf Road in the Town of Colonie and County of Albany and State of New York; and the (hereinafter called "RAILROAD")**.**

WHEREAS, the railroad right of way or property (hereinafter also referred to as "lands") that is the subject of this agreement is included among the property being owned or operated by the RAILROAD.

WHEREAS, the STATE, in accordance with the Highway Law, will prepare plans and specifications for the project: **CLICK TO ENTER PIN**; **CLICK TO ENTER PROJECT DESCRIPTION**,

(hereinafter called "PROJECT"), and has acquired or will acquire the necessary lands and easements therefore and intends to let a contract for the work outlined therein and will supervise the work performed under such contract, and

WHEREAS, the PROJECT will be carried across the aforesaid right-of-way of the RAILROAD in accordance with the aforesaid plans and specifications which have been heretofore approved by the RAILROAD, and the STATE has requested the RAILROAD to consent to the entry upon such lands and also to perform certain work hereinafter generally described, for the accommodation of such construction primarily.

NOW, THEREFORE, in consideration of the benefits moving to each of the parties hereto, they do mutually agree as follows:

ARTICLE 1. **CONSENT TO ENTRY UPON LANDS.** The RAILROAD does hereby authorize and consent to the entry by the STATE, its representatives and contractors, upon the RAILROAD's lands and premises shown on the plans referred to above for the purpose of performing all necessary work in connection with the construction of the PROJECT by the STATE and described in said plans and specifications heretofore mentioned, which plans and specifications are hereby made a part of this Agreement by reference. This consent to enter shall be coterminous with the aforementioned highway contract.

ARTICLE 2. **CONTRACT WORK.** The STATE agrees that the construction shall be carried on with due regard to the protection and maintenance of the property, traffic and operations of the RAILROAD, and in such a manner as to cause no damage to, or unreasonable interference with such traffic or operations.

ARTICLE 3. DESCRIPTION OF WORK. The RAILROAD agrees to make necessary changes in its railroad and railroad facilities to the extent required for the construction of the PROJECT and to construct and provide such additional facilities as may be needed in connection with the maintenance and protection of railroad traffic during such changes in its railroad and the construction of said PROJECT. The RAILROAD further agrees to coordinate its said work with that of the Contractor of the STATE and to cooperate with said Contractor.

ARTICLE 4. REIMBURSEMENT. The STATE agrees to pay or to reimburse the RAILROAD for the

entire cost of any work performed, including the cost of preliminary and construction engineering as well as for facilities provided by the RAILROAD and the premiums of any and all insurance policies provided by the RAILROAD under the Agreement in connection with said construction work, pursuant to the provisions of the Federal-Aid Policy Guide, Title 23, Code of Federal Regulations (CFR) Part 140, Subpart I, (Reimbursement for Railroad Work), and amendments thereto. It is intended by the parties hereto that by this reference to said reimbursement procedure and amendments it is agreed that the provisions thereof are deemed to be included herein and are accepted as binding upon the said parties to the same extent and with the same force and effect as if such documents had been set forth in and made a part of this Agreement.

The RAILROAD shall submit to the STATE evidence of fair and reasonable costs of the aforesaid work performed or facilities provided by the RAILROAD, less the value of materials recovered, as evidence by detailed invoices acceptable to the STATE. The STATE shall reimburse the RAILROAD in the amount of the approved costs so submitted in accordance with Article Eleven-A of the State Finance Law, but in no event shall the cost to the STATE of said work performed and facilities provided and of the liability insurance policy or policies provided by the RAILROAD exceed the sum of **$_____ and _____/100 DOLLARS** specified in the estimate submitted to the STATE by the RAILROAD and made a part hereof except as such sum may hereafter be increased pursuant to an amended agreement or Agreements. All costs so submitted by the RAILROAD shall be subject to the approval of the STATE and to audit by the Comptroller of the State of New York. Reimbursement therefore by the STATE to the RAILROAD will be made for monthly periods as to the work performed or facilities provided by the RAILROAD in accordance with approved certificates showing the cost of the work so performed or facilities provided up to and including the last day of the previous month. Upon the completion of all said work by the RAILROAD pursuant to this Agreement, a final statement of costs shall be submitted to the STATE within one hundred eighty (180) days. Upon the receipt of the final statement of costs by the COMMISSIONER, the COMMISSIONER will conduct an audit of the RAILROAD's project account records within one hundred eighty (180) days to determine the resources applied or used by the RAILROAD in fulfilling the terms of this Agreement. Upon the completion of said audit and concurrence by the RAILROAD, the final reimbursement payment will be made to the RAILROAD.

On projects financed in whole or in part with Federal funds, and in recognition of the participation by the Federal Government in the costs to the STATE of this PROJECT, the RAILROAD shall keep and retain cost records and accounts so that they will be available for audit by authorized representatives of the Federal Highway Administration. The RAILROAD does further agree that on or before the date of it's final billing pursuant to this Agreement, it will notify the COMMISSIONER in writing of the location where such cost records and accounts will be available for the Government, all in accordance with Title 23, CFR Part 140, Subpart I of the U.S. Department of Transportation Federal-Aid Policy Guide and amendments thereto.

ARTICLE 4(a). AGREEMENT PAYMENTS. The RAILROAD shall provide complete and accurate billing invoices to the Agency in order to receive payment. Billing invoices submitted to the Agency must contain all information and supporting documentation required by the Agreement, the Agency and the State Comptroller. Payment for invoices submitted by the RAILROAD shall only be rendered electronically unless payment by paper check is expressly authorized by the Commissioner, in the Commissioner's sole discretion, due to extenuating circumstances. Such electronic payment shall be made in accordance with ordinary State procedures and practices. The RAILROAD shall comply with the State Comptroller's procedures to authorize electronic payments. Authorization forms are available at the State Comptroller's website at www.osc.ny.gov/epay/index/htm, by e-mail at epunit@osc.ny.gov, or by telephone at 518-474-4032. The RAILROAD acknowledges that it will not receive payment on any invoices submitted under this Contract if it does not comply with the State Comptroller's electronic payment procedures, except where the Commissioner has expressly authorized payment by paper check as set forth above.

ARTICLE 5. **FUNDS AVAILABLE.** This contract shall be deemed executory only to the extent of money available to the STATE for the performance of the terms hereof and no liability on account thereof shall be incurred by the State of New York or the RAILROAD beyond moneys available for the purpose thereof.

ARTICLE 6. **EFFECTIVE DATE OF AGREEMENT.** This Agreement shall take effect on the **CHOOSE DATE.**

ARTICLE 7. **TERMINATION OF AGREEMENT.** The STATE will obtain the RAILROAD's written acceptance of all contract work in connection with this PROJECT prior to releasing the STATE'S contractor from his contractual obligations.

The STATE reserves the right to terminate or suspend this Agreement, for any reason whatsoever. Such right of termination or suspension shall be exercised at the discretion of COMMISSIONER, by delivery of written notice thereof to the RAILROAD, and such termination or suspension shall thereupon take effect immediately.

However, nothing in this Agreement or in this Article 7 shall relieve the STATE of its obligation to reimburse the RAILROAD for costs and expenses which the RAILROAD has incurred or committed itself to under the terms or for the purposes of this Agreement prior to such termination or suspension.

Should no other action be required, this Agreement shall be considered terminated on such date as the RAILROAD receives the final reimbursement payment from the STATE for its final statement or costs submitted in accordance with Article 4 hereof.

ARTICLE 8. **DIVISION OF MAINTENANCE.** Upon the completion and acceptance by the STATE of the contract work as indicated on the plans.

The Maintenance responsibility shall remain as is currently in effect.

Before entering upon the property of the RAILROAD to perform any maintenance, the STATE shall give due notice to the Chief Engineer of the RAILROAD.

ARTICLE 9. **RESPONSIBILITY.** In addition to the protection afforded to the STATE under any available insurance, the STATE shall not be liable for any damage or injury to the RAILROAD, its agents, employees, or to any other person, or to any property, occurring on the site or in any way associated with the RAILROAD's work, activities or operations pursuant to this agreement, whether undertaken by RAILROAD's own forces or by contractors or other agents working on the RAILROAD's behalf. To the fullest extent permitted by law, the RAILROAD agrees to defend, indemnify and hold harmless the STATE, the New York State Department of Transportation, the STATE's Contractor, and their agents from and against all claims, damages, losses and expenses, including but not limited to, claims for personal injuries, property damage, wrongful death, and/or environmental claims and attorney fees arising out of any such claim, that are in any way associated with the RAILROAD's, work, activities or operations pursuant to this agreement.

ARTICLE 10. INSURANCE REQUIREMENTS. The STATE agrees that as a condition of being provided access to the PROJECT location, that insurance shall be procured, including a Railroad Protective Liability Insurance policy issued to the RAILROAD, which shall be in accordance with U.S. Department of Transportation Federal-Aid Policy Guide, and any amendments thereto with limits as shown in Title 23, CFR Section 646.107.

In addition, STATE shall require its contractor to furnish the kinds and amounts of insurance, as follows:

1. Commercial General Liability Insurance: Each and every party performing work in connection with the PROJECT described herein shall be required to be insured under a policy of insurance. Such contractor or contractors shall maintain an occurrence form commercial general liability policy or policies insuring against liability arising from personal injury or death, advertising injury, liability insured under an insured contract (including the tort liability of another assumed in a business contract) occurring on or in any way related to the premises or occasioned by reason of the operations of the primary named insured. Such coverage shall be written on an ISO occurrence form (ISO Form CG 00 01 12 07 or a policy form providing equivalent coverage), including any excess liability insurance providing coverage in an amount of five million dollars ($5,000,000.00) per occurrence and five million dollars ($5,000,000.00) aggregate. Aggregate coverage must be secured on a per-project basis. This insurance must be endorsed to provide coverage to "**the RAILROAD, the State of New York/New York State Department of Transportation, any municipality in which the event is conducted, and any governmental entity whose facilities are affected by the event, and any of their employees or agents working for or on the facility,"** using ISO form CG 20 10 07 04 or a form that provides equivalent coverage.
2. Protective Liability Insurance: In the event that work is to be performed exclusively by RAILROAD, the CGL requirement referenced, above, may take the form of Railroad Protective Liability (RRPL) insurance or self-insurance. In the event that one or more contractors are to be utilized for the PROJECT, then the primary contractor shall secure an RRPL policy in the name of RAILROAD providing coverage in an amount of two million dollars ($2,000,000.00) per occurrence and not less than six million dollars ($6,000,000.00) aggregate.
3. Workers' Compensation and Disability Insurance and Employers' Liability Insurance. As required by State Finance Law §142, any Contractor working on the PROJECT shall maintain in force workers' compensation insurance for all of Contractor's employees. Contractors shall also maintain disability insurance as required by the Disability Benefits Law of the State of New York.
4. Automobile Insurance (applicable where automobiles or other vehicles will be used in relation to the event). Contractor(s) shall maintain a commercial or other automobile policy or policies insuring against liability for bodily injury, death, or damage to property and other mandatory coverages, relating to the use, operation, loading or unloading of any automobiles (including owned, hired and non-owned vehicles) on and around the project. Coverage shall be in an amount of not less than one million dollars ($1,000,000.00), each accident.

As required by State Finance Law Section 142 and Workers' Compensation Law Section 57, RAILROAD is required shall furnish proof that there is Workers' Compensation and Disability Insurance and Employers' Liability Insurance in force for all of RAILROAD's employees. RAILROAD shall also maintain disability insurance as required by the Disability Benefits Law of the State of New York. RAILROAD shall provide evidence of the required coverage or exemption where appropriate (usually Form C-105.2 and Form DB-120.1). RAILROAD may furnish proof of coverage under the Federal Employers Liability Act and similar statutes for the protection of employers for injuries to or death of employees engaged in the work.

ARTICLE 11. **ASSIGNMENT OF AGREEMENT.** The RAILROAD agrees not to assign, transfer, convey, sublet or otherwise dispose of this Agreement or any part thereof, or of its right, title or interest therein or its power to execute such Agreement, to any person, RAILROAD or corporation without the previous consent in writing of the COMMISSIONER, unless a transfer of its entire property and assets is made. In case the RAILROAD shall, with the consent of the STATE, make contracts for any part of the work or facilities covered by this Agreement, the terms of said contracts shall be subject to the approval of the STATE. The RAILROAD shall pay its contractors in accordance with the terms of such contracts and the STATE agrees to reimburse the RAILROAD for the cost thereof.

ARTICLE 12. STARTING OF WORK. The RAILROAD agrees to start the work covered by this Agreement only after the COMMISSIONER or his authorized representative has notified the Chief Engineer of the RAILROAD in writing that it may proceed.

ARTICLE 13. REQUIRED STATE AND FEDERAL CONTRACT CLAUSES. During the performance of this contract, the RAILROAD agrees to comply with all applicable Federal and State required contract provisions which appear as **Appendix A (Standard Clauses for New York State Contracts), A-1 (Supplemental Title VI Provisions from Civil Rights Act), Appendix B (Required Contract Provisions for federal-Aid Construction Contracts)** respectively and are hereby made a part of this Agreement.

With respect to Appendix A, the STATE and the RAILROAD understand and agree that the hours of labor of the RAILROAD's employees are governed exclusively by the Federal Hours of Service Act, 35 Stat. 1415 (1907), as amended, and that the prevailing rate of wages for the RAILROAD's employees shall be that rate determined by the RAILROAD. The RAILROAD and the STATE further understand and agree that if the RAILROAD subcontracts with a third party not engaged in interstate commerce to perform an obligation of this Agreement, the above-mentioned sections will apply to the subcontractor. These understandings are essential to this Agreement, and any subsequent legislation, judicial or administrative decisions, or opinions of the State Attorney General inconsistent with these understandings, shall relieve both parties of their obligations, hereunder until a mutually acceptable substitute understanding is reached. In the event that no mutually acceptable substitute understanding is reached, then either party may terminate the Agreement.

To the extent that this agreement calls for RAILROAD to provide materials, as provided in Appendices, RAILROAD will provide materials from existing inventories. The STATE and RAILROAD understand and agree that to the extent RAILROAD is required to procure additional materials for completion of the PROJECT, RAILROAD will do so in accordance with the Appendices.

ARTICLE 14. NOTICES. All notices permitted or required hereunder shall be in writing and shall be transmitted either:

(a) via certified or registered United States mail, return receipt requested;
(b) by facsimile transmission;
(c) by personal delivery;
(d) by expedited delivery service; or
(e) by e-mail.

1. Such notices shall be addressed as follows or to such different addresses as the parties may from time-to-time designate:

2. Any such notice shall be deemed to have been given either at the time of personal delivery or, in the case of expedited delivery service or certified or registered United States mail, as of the date of first attempted delivery at the address and in the manner provided herein, or in the case of facsimile transmission or email, upon receipt.

3. The parties may, from time to time, specify any new or different address in the United States as their address for purpose of receiving notice under this Agreement by giving fifteen (15) days written notice to the other party sent in accordance herewith. The parties agree to mutually designate individuals as their respective representatives for the purposes of receiving notices under this Agreement. Additional

individuals may be designated in writing by the parties for purposes of implementation and administration/billing, resolving issues and problems and/or for dispute resolution.

IN WITNESS WHEREOF, the STATE has caused this Agreement to be signed by the Commissioner of Transportation, and the RAILROAD has caused these presents to be signed by its duly authorized officer on the day and year first above written:

If any clause, sentence, subdivision, paragraph, section or part of the contract be adjudged by any court of competent jurisdiction to be invalid, such judgment shall not affect, impair or invalidate the remainder thereof, but shall be confined in its operation to the clause, sentence, subdivision, paragraph, section or part thereof directly involved in the controversy in which such judgment shall have been rendered.

This Agreement is based on the RAILROAD's force account estimate dated _____

in the amount of _____and_____/100

DOLLARS ($_____) and is valid through CHOOSE DATE.

CLICK TO ENTER PIN

AGREEMENT NUMBER _____

NYSDOT Certification

"In addition to the acceptance of this contract, I also certify that original copies of this signature page will be attached to all other exact copies of this contract."

THE PEOPLE OF THE STATE OF NEW YORK (L.S.)

By: _____ _____

for: Commissioner of Transportation Date

By: _____

Title:_____

The following acknowledgment to be completed by the RAILROAD

STATE OF _____)
) SS:
COUNTY OF_____)

On this _____ day of _____, 20____, before me personally came

_____ to me known to be the

_____ of _____

the corporation described in and which executed the foregoing instrument: acknowledged to me that (s)he executed the same pursuant to authorization by the Board of Directors of said corporation.

_____
NOTARY PUBLIC

APPROVED AS TO FORM
NEW YORK STATE
ATTORNEY GENERAL'S SIGNATURE

_____

Dated_____

Not Applicable to agreements in amounts of $50,000.00 or less

NEW YORK STATE
COMPTROLLER'S SIGNATURE

_____

Dated_____

Not Applicable to agreements in amounts of $50,000.00 or less

Eff. April 10, 2006, per NY Finance L. Section 112(2)(a), the “T” contract limit was raised from $15,000.00 to $50,000.00 or less {Ref: Comptroller’s Bulletin #G - 225, d. 4/26/06}

APPENDIX 9:

Areas of Potential Native Nation Monitoring (Map 1, Sheets 1 and 2)

Focus Map - Areas of Potential Native Nation Monitoring (Map 2, Sheets 1 and 2)

Typical Road Section and Associated Definitions

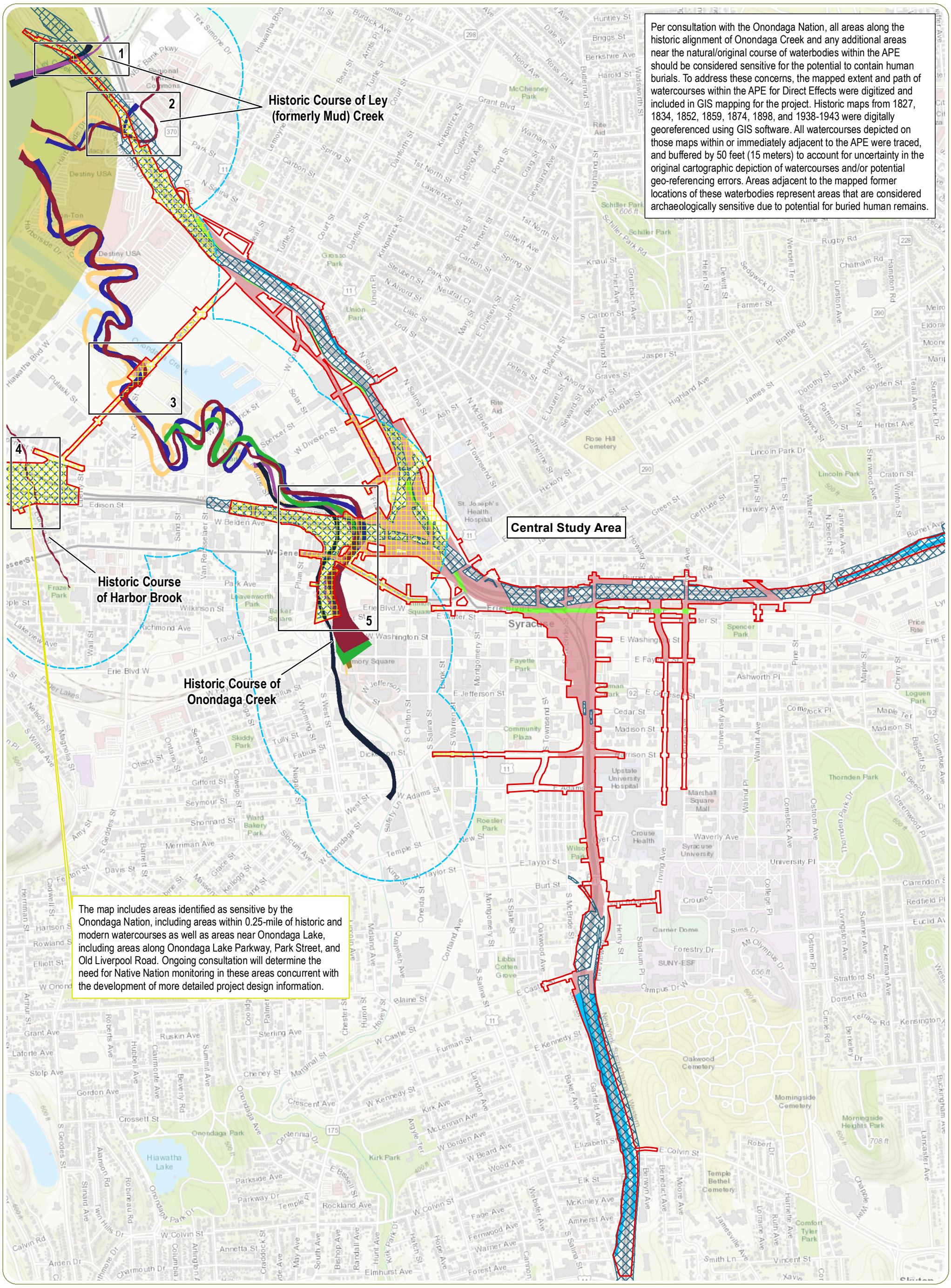

I-81 Viaduct Project

Onondaga County, New York

Map 1: Areas of Potential Native Nation Monitoring

Sheet 1: Central Study Area

January 2022

Notes: 1. Basemap: ESRI ArcGIS Online "World Topographic Map" Map Service.
2. This is a color graphic. Reproduction in grayscale may misrepresent the data.
3. This map presents information originally presented in Figure 4 of the Phase IB Work Plan (EDR, 2017).

- APE for Direct Effects
- Cut and Fill Highway and Embankment Areas
- Shovel Testing Completed 2017-2020

Recommendations

- Machine-Aided Testing and/or Monitoring
- Archaeological Monitoring

Historic Locations of Streams

- 1827 Kellogg Map of a Part of the Onondaga Salt Springs Reservation
- 1834 Leavenworth & Clarke Map of the Village of Syracuse and the Village of Lodi
- 1852 Fagan Map of Onondaga County, New York
- 1859 French Map of Onondaga County, New York
- 1874 Sweet New Atlas of Onondaga Co., New York
- 1898 USGS Topographic Quadrangle
- 1938-1943 USGS Topographic Quadrangles
- Quarter-Mile Buffer of Watercourses
- Sensitive Area Identified by Onondaga Nation
- Potential Native Nation Monitoring

0 500 1,000 2,000 Feet

N W E S

NEW YORK STATE OF OPPORTUNITY. Department of Transportation

U.S. Department of Transportation Federal Highway Administration

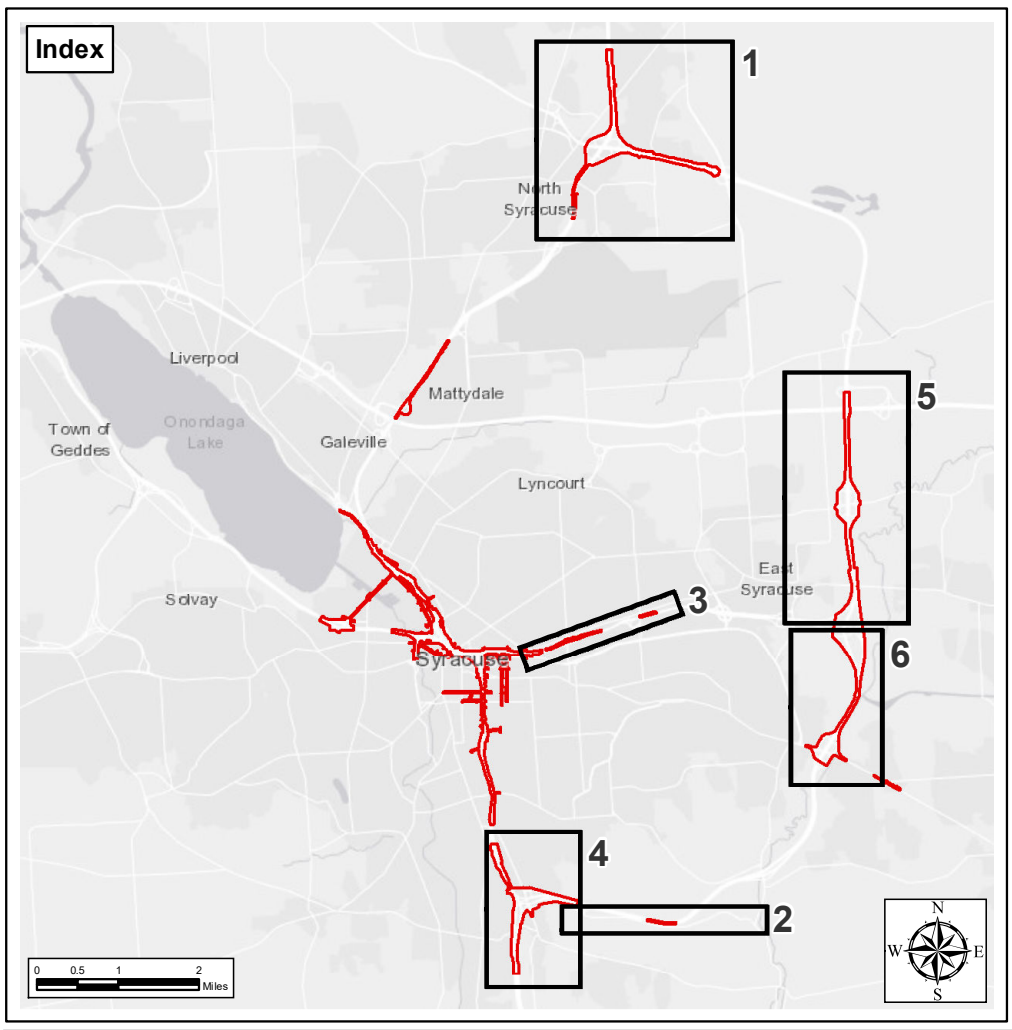

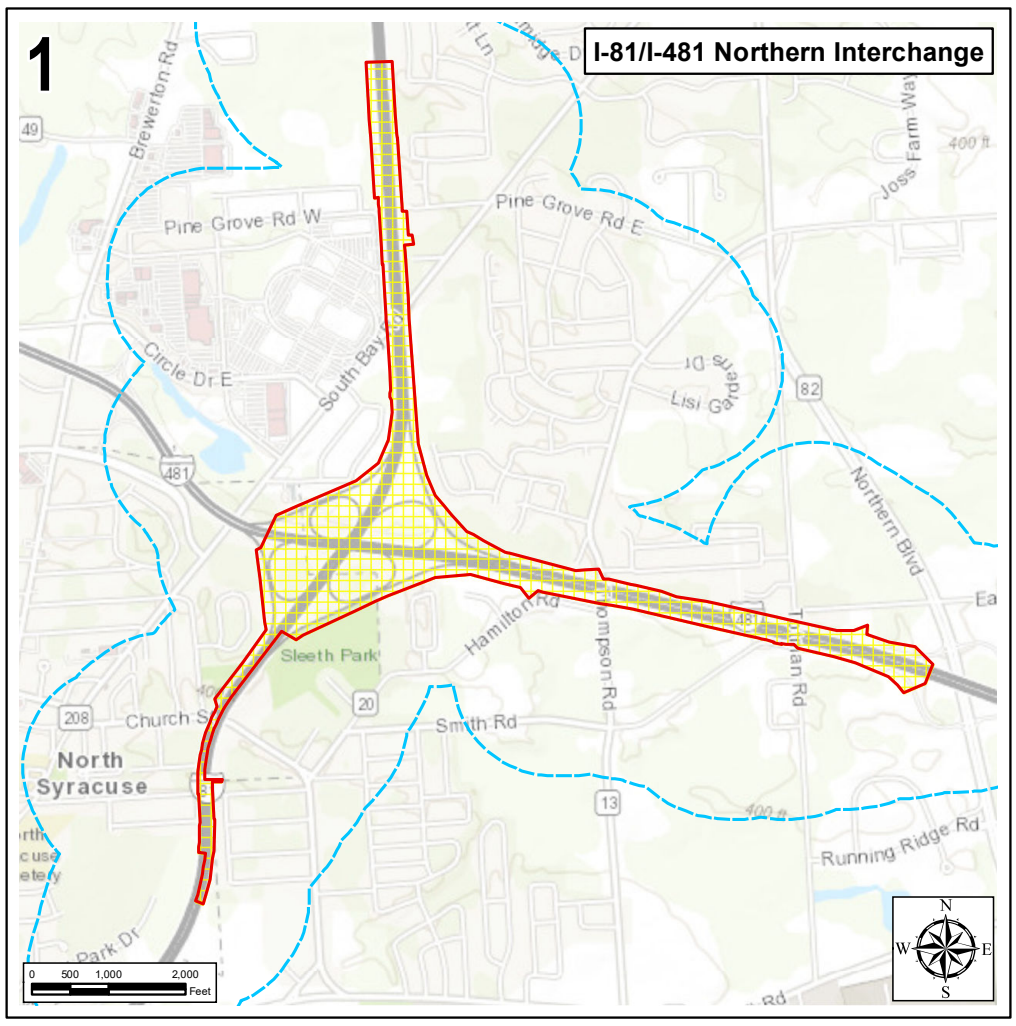

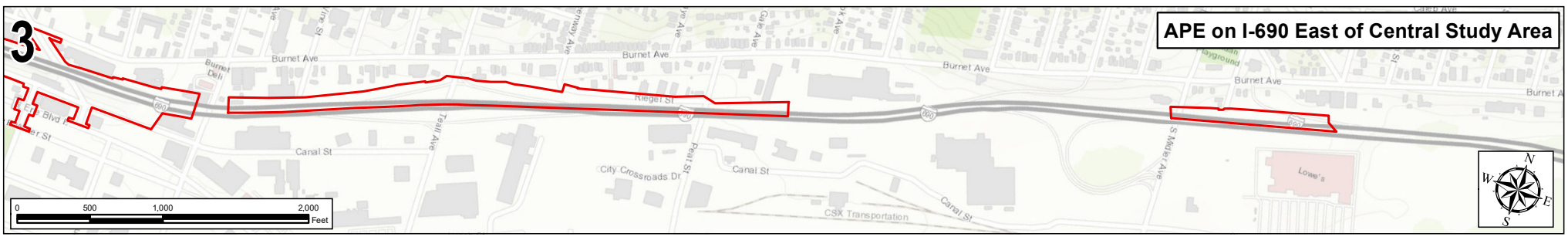

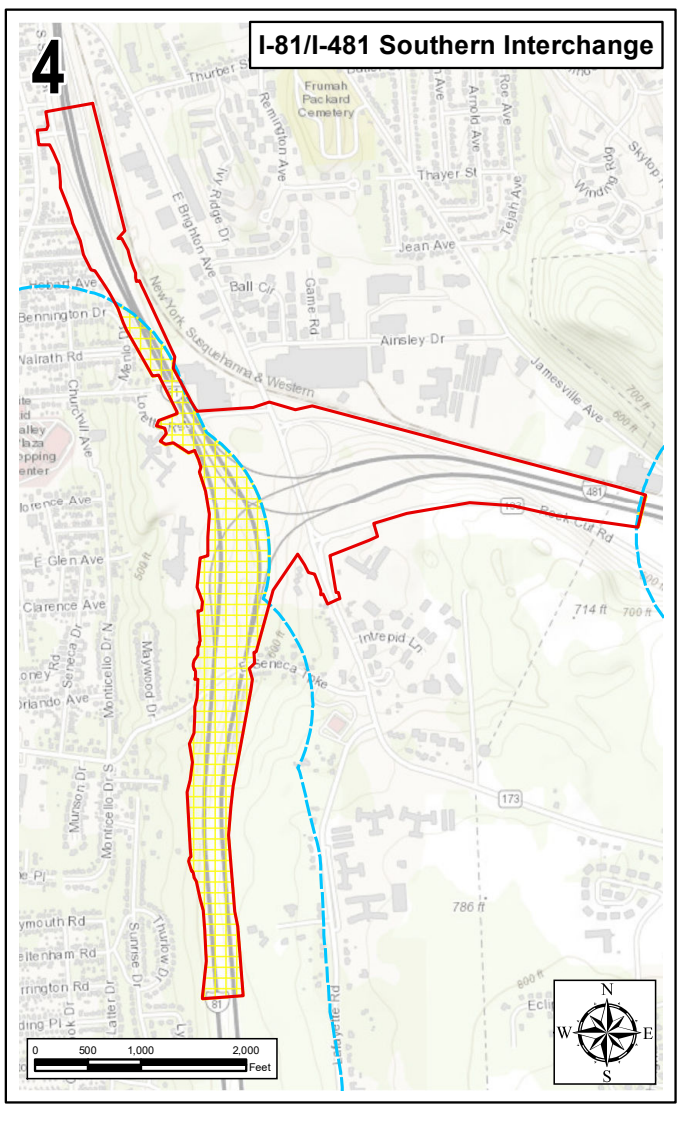

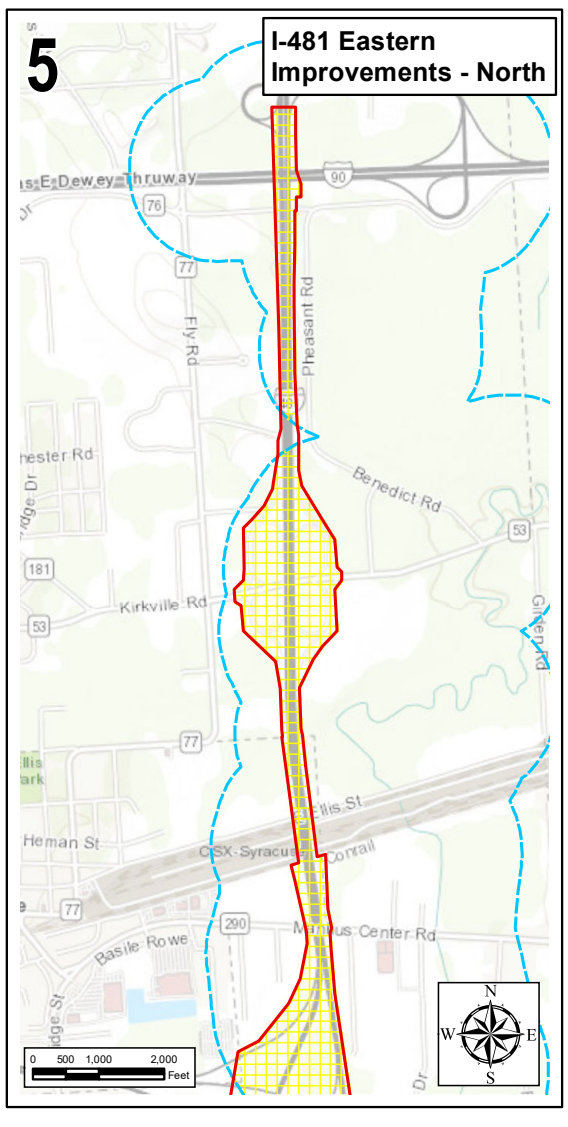

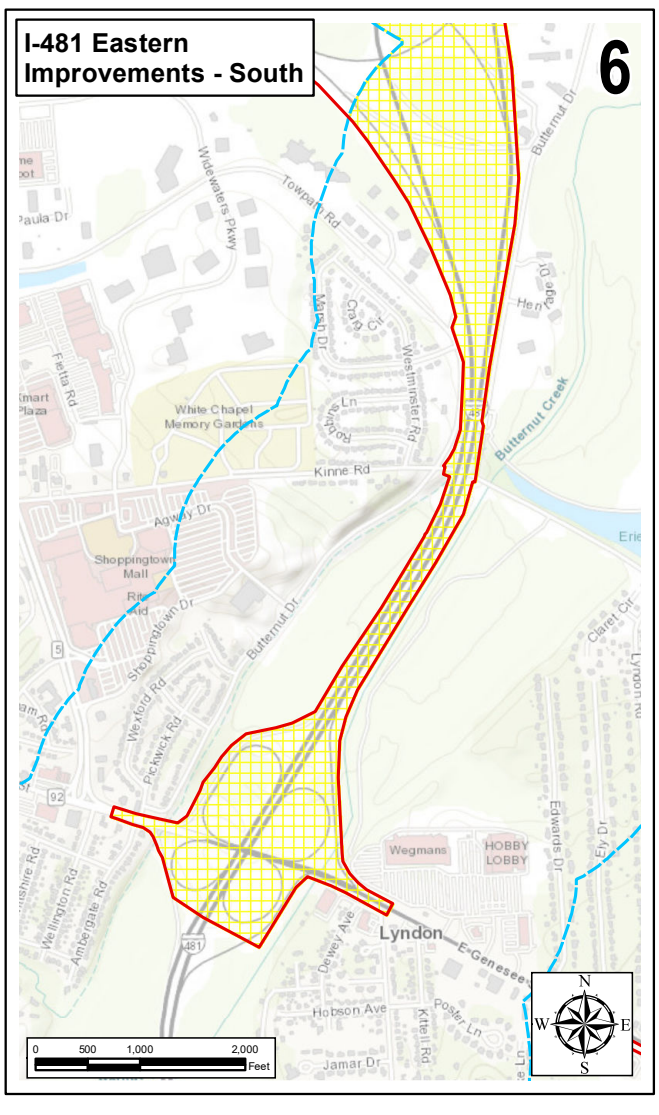

I-81 Viaduct Project

Onondaga County, New York

Map 2: Focus Map - Areas of Potential Native Nation Monitoring

Sheet 2: Additional Areas

Notes: 1. Basemap: ESRI ArcGIS Online "World Topographic Map" Map Service.
2. This is a color graphic. Reproduction in grayscale may misrepresent the data.
3. This map presents information originally presented in Figure 4 of the Phase IB Work Plan (EDR, 2017).

APE for Direct Effects
Quarter-Mile Buffer of Watercourses
Potential Native Nation Monitoring

February 2022

NEW YORK STATE OF OPPORTUNITY. Department of Transportation

U.S.Department of Transportation
Federal Highway Administration

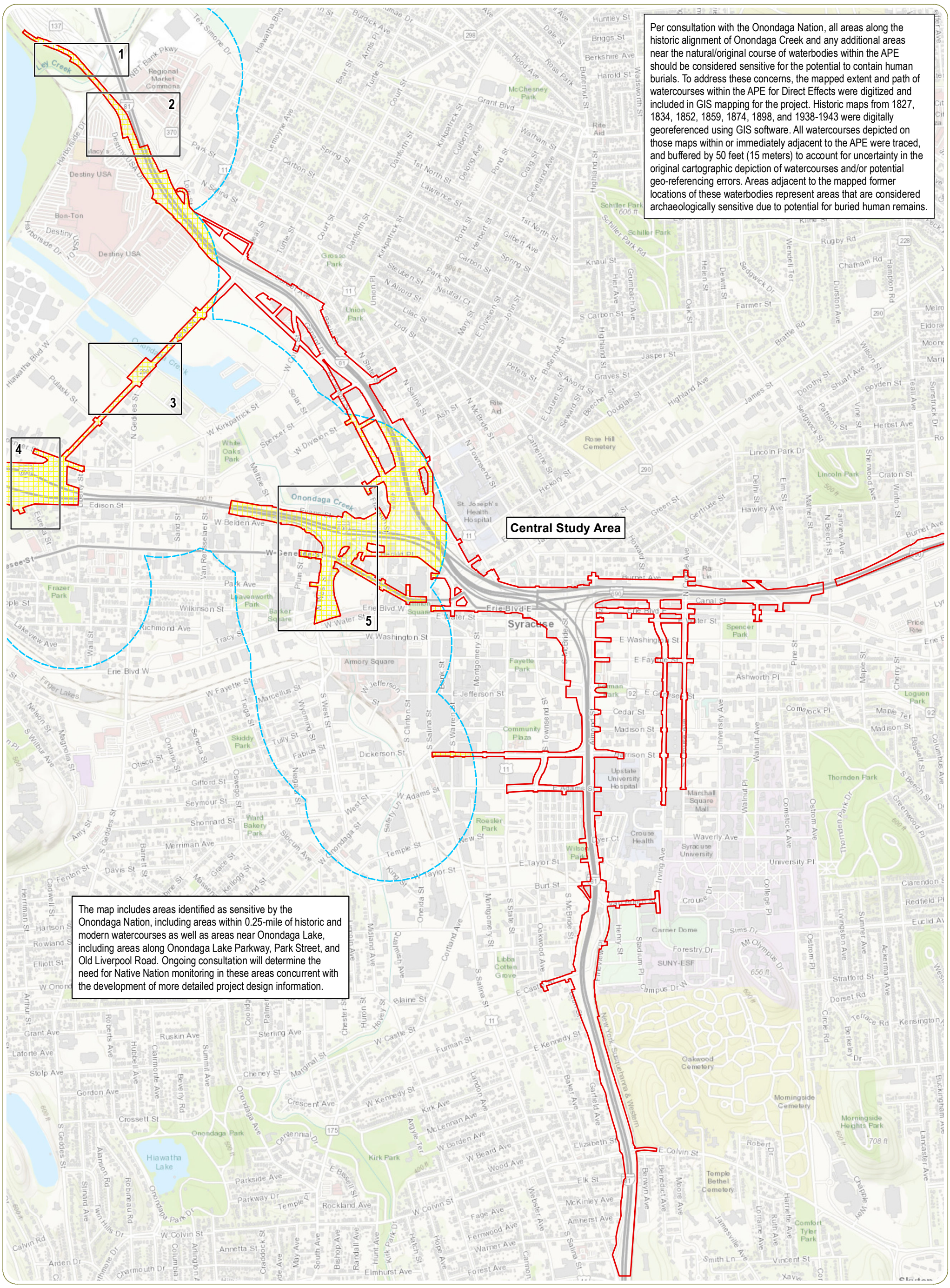

I-81 Viaduct Project

Onondaga County, New York

Map 2: Focus Map - Areas of Potential Native Nation Monitoring

Sheet 1: Central Study Area

Notes: 1. Basemap: ESRI ArcGIS Online "World Topographic Map" Map Service.
2. This is a color graphic. Reproduction in grayscale may misrepresent the data.
3. This map presents information originally presented in Figure 4 of the Phase IB Work Plan (EDR, 2017).

APE for Direct Effects
Quarter-Mile Buffer of Watercourses
Potential Native Nation Monitoring

February 2022

0 500 1,000 2,000 Feet

N W E S

NEW YORK STATE OF OPPORTUNITY. Department of Transportation

U.S.Department of Transportation
Federal Highway Administration

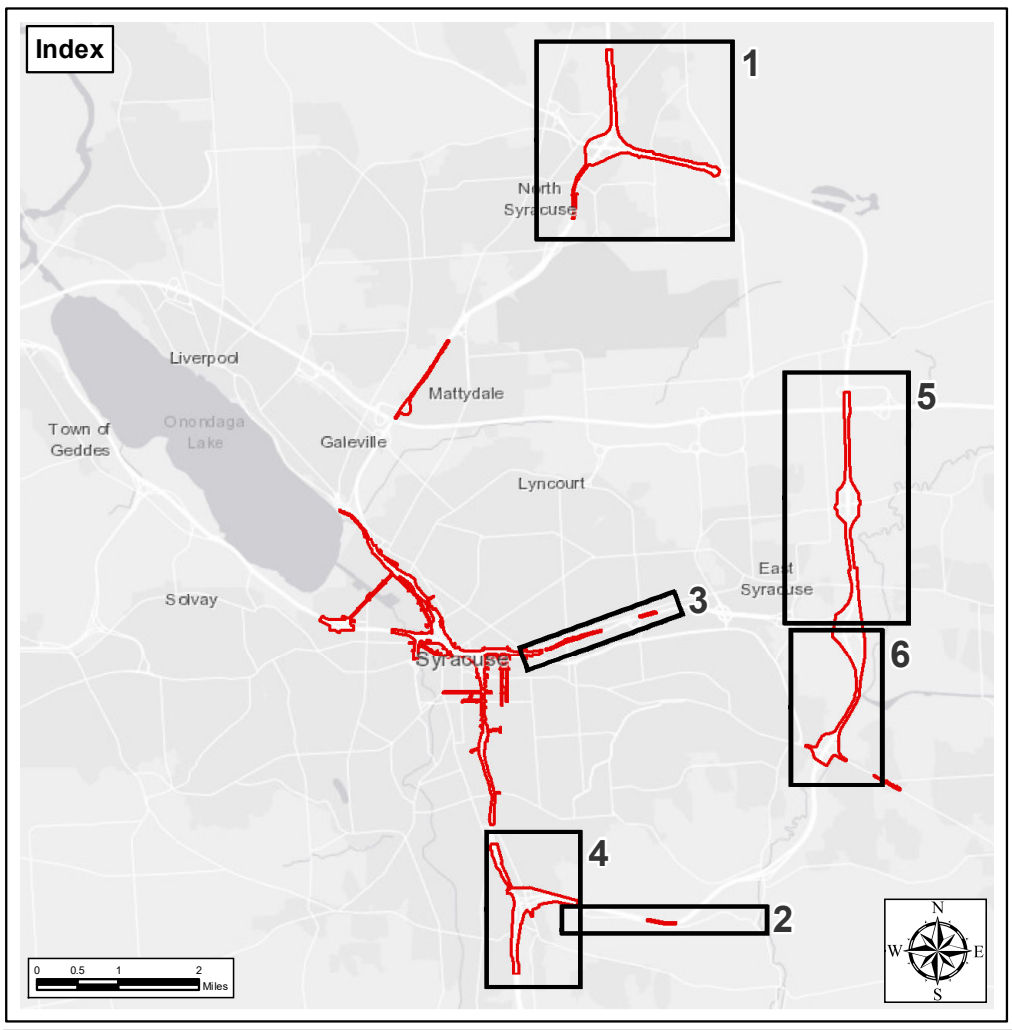

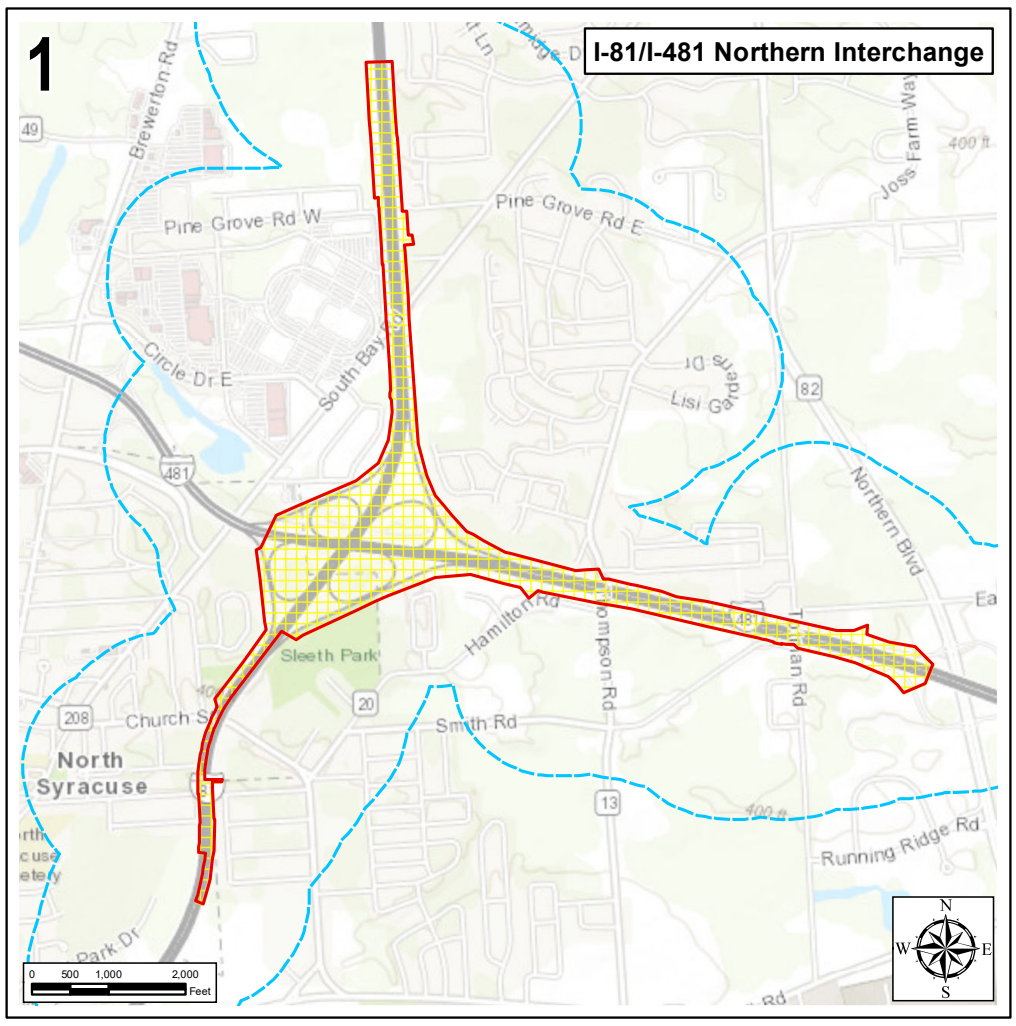

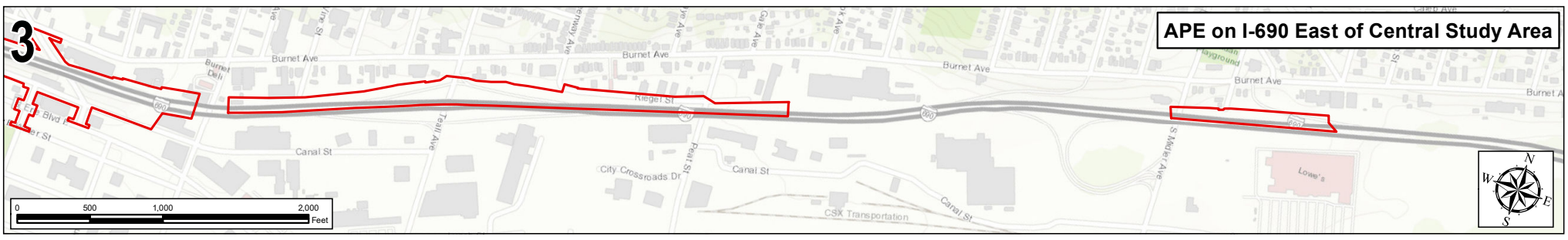

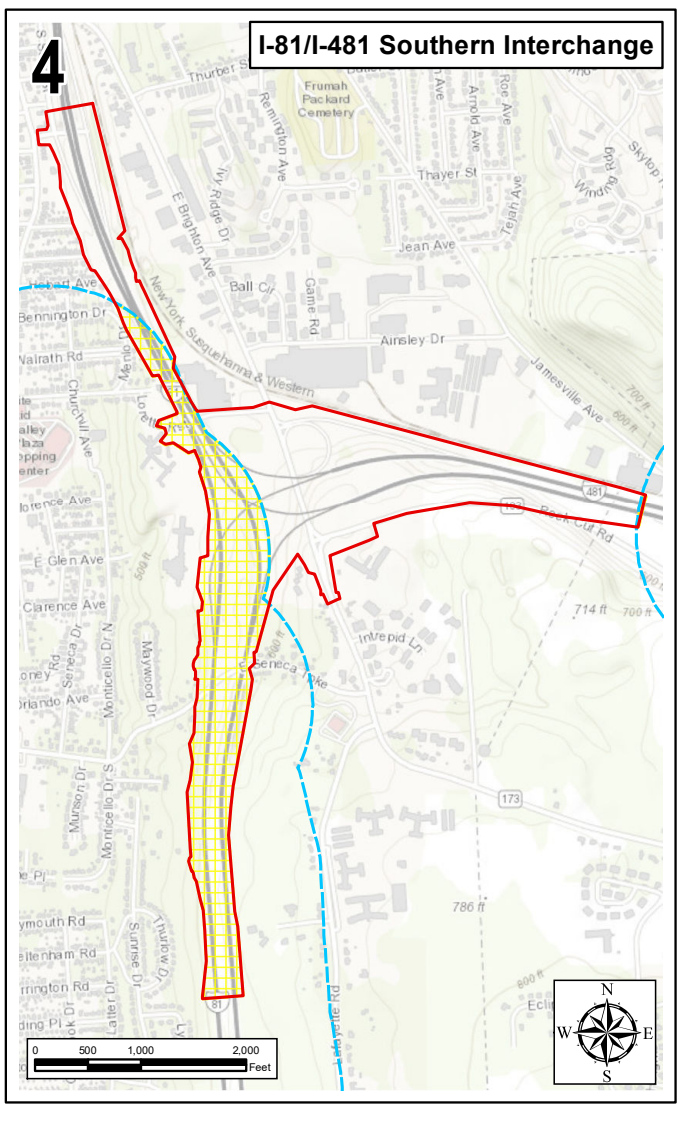

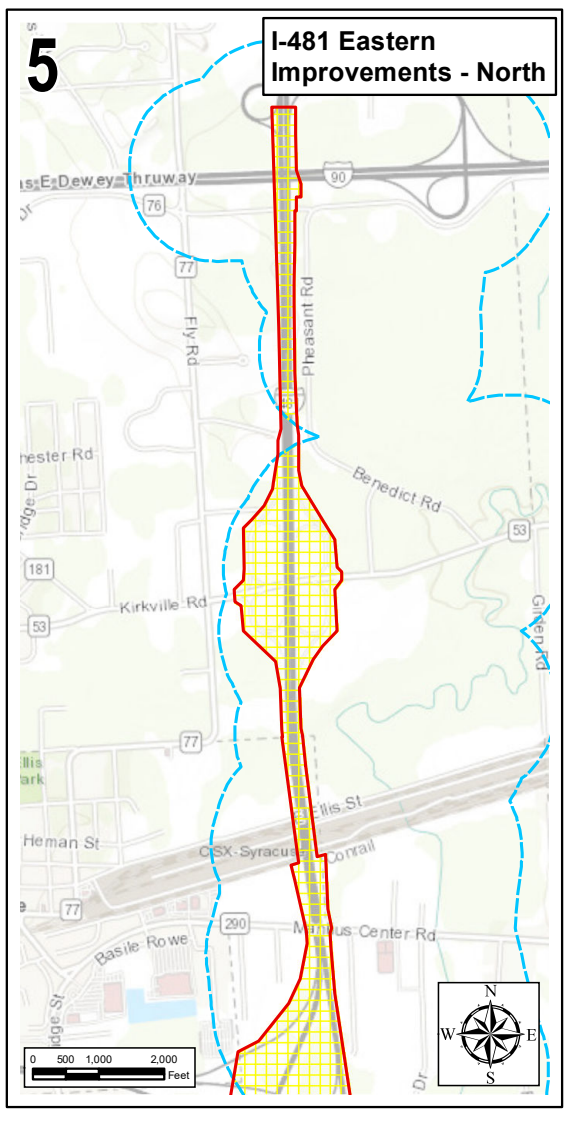

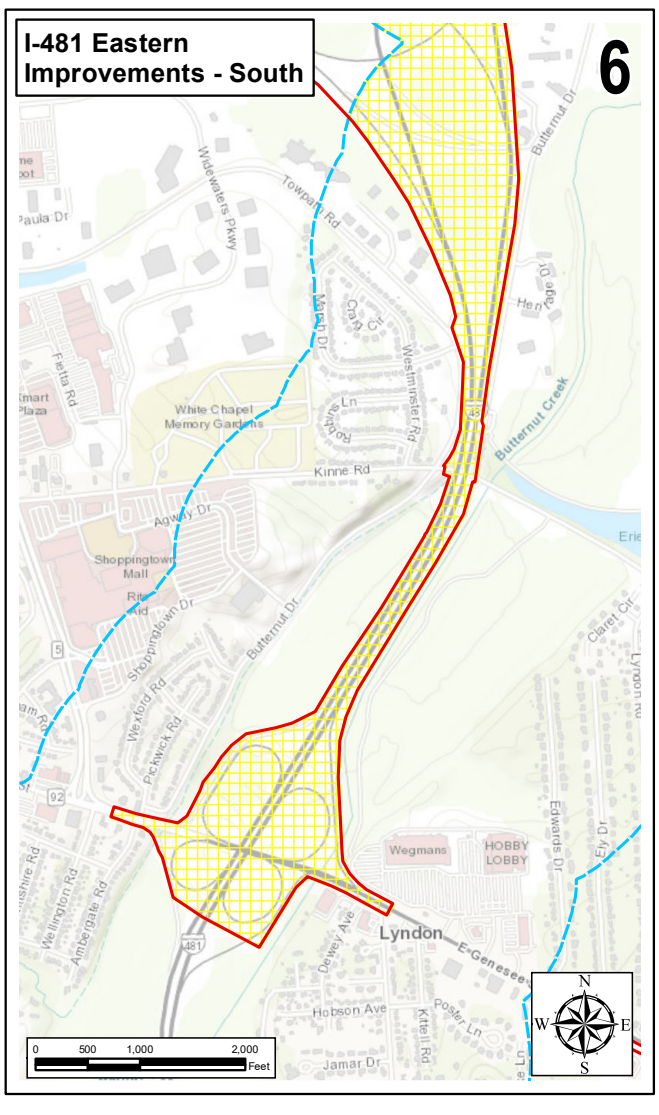

I-81 Viaduct Project

Onondaga County, New York

Map 2: Focus Map - Areas of Potential Native Nation Monitoring

Sheet 2: Additional Areas

Notes: 1. Basemap: ESRI ArcGIS Online "World Topographic Map" Map Service.
2. This is a color graphic. Reproduction in grayscale may misrepresent the data.
3. This map presents information originally presented in Figure 4 of the Phase IB Work Plan (EDR, 2017).

APE for Direct Effects
Quarter-Mile Buffer of Watercourses
Potential Native Nation Monitoring

February 2022

NEW YORK STATE OF OPPORTUNITY. Department of Transportation

U.S.Department of Transportation
Federal Highway Administration

APPENDIX 9
TYPICAL ROAD SECTION AND ASSOCIATED DEFINITIONS

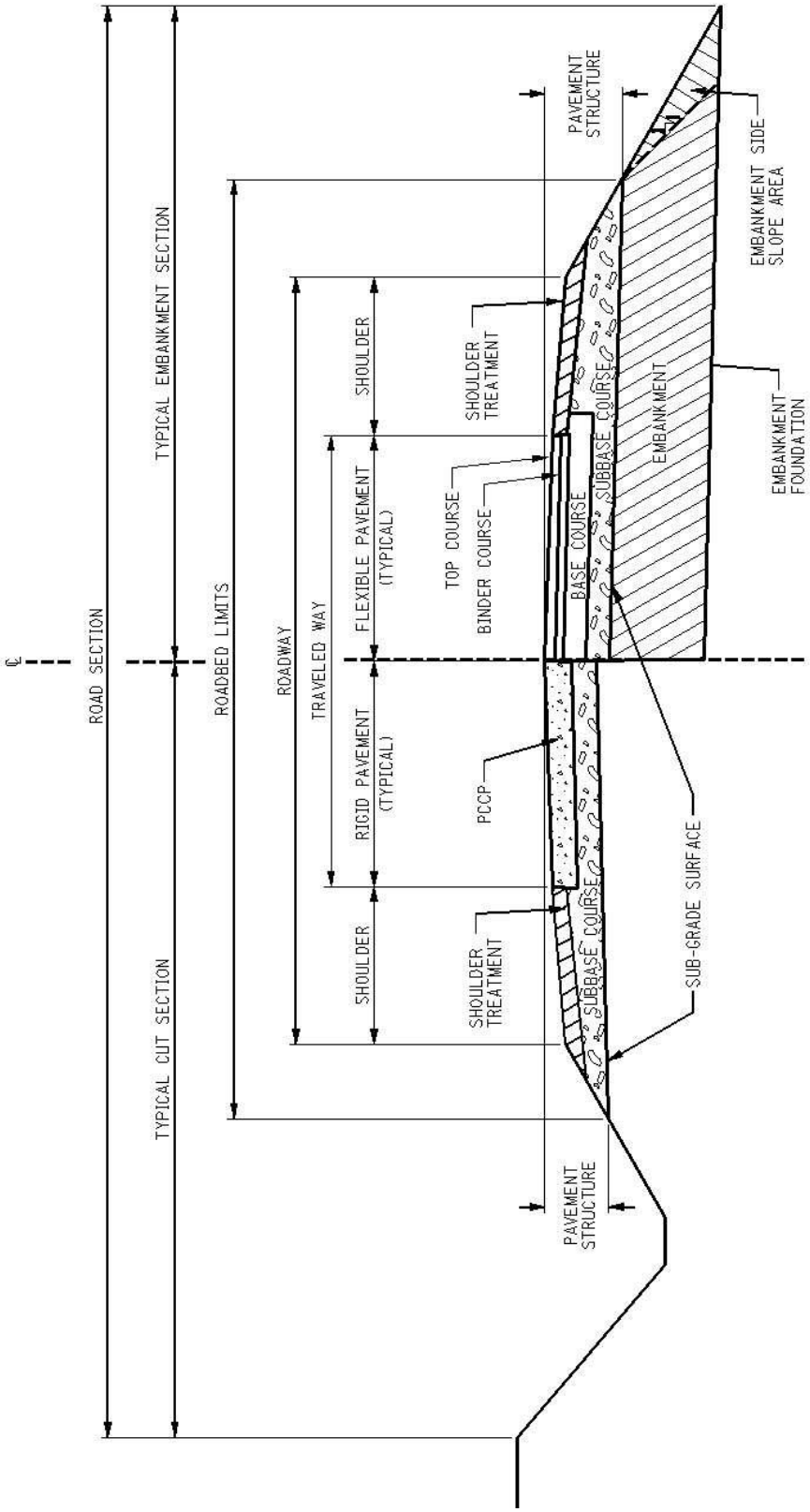

AS DEFINED IN THE NYSDOT STANDARD SPECIFICATIONS, SECTION 101-02 DEFINITIONS OF TERMS:

Fill is the material used under the highway to raise the elevation of the roadway.

Foundation Course refers to the subbase and subgrade materials that support the asphalt or concrete surface layers.

Inlay refers to placing an asphalt paving course on top of a milled surface area, which fills holes and levels the pavement.

Material means any approved material acceptable to the Commissioner and conforming to the requirements of the specifications.

Pavement Structure is the combination of subbase, base course and surface course(s) placed on a subgrade to support the traffic load and distribute it to the roadbed.

Plans are the official contract drawings and applicable standard sheets, which show the location, character, dimensions and details of the work to performed.

Road Section is that portion of a highway included between the top of the slope in cut and the bottom of slope in fill.

Roadbed means the graded portions of a highway within top and side slopes, prepared as a foundation for the pavement structure and shoulders.

Shoulder means the portion of the roadway contiguous with the traveled way for accommodation of stopped vehicles, for emergency use, and for lateral support of base and surface courses.

Structures include bridges, culverts, retaining walls, cribbing, manholes, drainage structures, end walls, buildings, sewers, service pipes, underdrains, foundation drains and other features which may be encountered in the work and not otherwise classed herein.

Subbase is the layer or layers of specified or selected material of designed thickness placed on a subgrade to support a base course.

Subgrade means the existing material to remain, or embankment material which is below the pavement structure.

Tolerance Zone, when used in reference to an underground utility, shall be a distance of 2 feet on either side of the designated centerline, plus one-half of the utility diameter, if the utility diameter is known.

SP-13. LOCAL HIRING INITIATIVE

SP-13. LOCAL HIRE INCENTIVE

The Local Hire Program provides an incentive payment for the recruitment and employment of local residents who may have experienced economic hardship and/or barriers to employment.

Participation Goal

Good faith efforts (GFEs) shall be made to achieve a goal of 15% of the overall employment hours on the project being performed by qualifying residents of the targeted area(s).

Targeted Area(s)

- All locations within zip codes: 13202, 13203, 13204, 13205, 13207, 13208, 13210, 13224, 13290, and residents of the Onondaga Nation territory.
- Locations within zip codes 13206 and 13214 that are also within the City of Syracuse.

Minimum Candidate Qualifications (at time of hire)

- **Tier 1** - Must currently reside in the targeted area(s) AND must have resided in the target area(s) for the prior 6 months.
- **Tier 2** – Must meet Tier 1 qualifications AND must currently face at least one of the following barriers to employment:
    1. Being a custodial single parent,
    2. Receiving federally funded housing assistance,
    3. Receiving HEAP, SNAP, or Medicaid,
    4. Lacking a GED or high school diploma,
    5. Having a criminal conviction, or
    6. Emancipated from the foster care system.

Incentive Payment Rates

- Tier 1 $20/hour
- Tier 2 $30/hour

Reporting

The use of LCPtracker Pro© software shall be used to track local hiring. All project workforce data and payroll information shall be entered into LCPtracker Pro© weekly and kept up to date throughout the duration of the contract. NYSDOT shall be provided access to this software so that reports can be generated as often as necessary. The cost of the software and all associated fees for setup and training, as well as the data entry and reporting throughout the life of the project is included in the price for Item 800.14000115 – Design Build – Local Hire Incentive.

SP-14. TRAINING REQUIREMENTS

SP-14. TRAINING REQUIREMENTS

Training Requirements

The Design-Builder shall be required to provide meaningful and effective training of apprentices/trainees leading to their qualification as entry level trade workers, professional support worker, or journeyworker in trades for the highway construction industry.

Item 800.15000115 - Design Build - Training Requirements

The Design-Builder shall utilize the contract bid item 800.15000115 - Training Requirements, to meet the requirement to provide meaningful and effective training on this project. The specification 800.15000115 is modified as follows for this contract:

- Under the construction details, Chart A is to be replaced with the following chart:

Chart A	
Sum of: Design Build - Construction Work items, Design Build - Extra Work Item, and Design Build - Site Mobilization item	**Minimum # of Apprentices/Trainees**
<$5M	No Requirement unless specified in Contract Documents
$5M to < $10M	4
$10M to < $30M	6
$30M to <$100M	8
≥$100M	2 per $25M (e.g. 18 for a $240M amount)

SP-15. STEEL/IRON PRICE ADJUSTMENT

Item 800.16000120 – *Steel/Iron Price Adjustment* has been included in this contract.

Background

The Department has elected to pilot the use of Steel/Iron Price Adjustments on this Design-Build contract. Steel and Iron Prices can change dramatically depending on many complex market and supply conditions. In an effort to limit the amount of financial risk experienced by the Design-Builder to these volatile market conditions, the Department will provide price adjustments based upon the Producer Price Index (PPI) for Semifinished Steel Mill Products. The Benchmark Steel Index will be based upon the PPI for the month that proposals are submitted. In conditions when the monthly steel index increases beyond the 5% threshold, a payment will be made to the Design-Builder for materials that were invoiced in that month. If the monthly steel index decreases beyond the 5% threshold, the Department will receive a credit for materials that were invoiced in that month. These payments/credits shall be in accordance with the requirements of Item 800.16000120, Steel/Iron Price Adjustment.

Form PA

Form PA has been included in the ITP Appendix E. This form shall be submitted with Volume 3 of the proposal and it shall indicate whether the Design-Builder elects to participate, or opt out, of the Steel/Iron Price Adjustment. The Design-Builder's decision to participate or opt-out of the Steel/Iron Price Adjustment must be made at the time of proposals due, as this decision cannot be modified thereafter.

Form PA has been preloaded to reflect the various materials within this contract that are eligible for the Steel/Iron Price Adjustment. No additional feature or materials are eligible for the Steel/Iron Price Adjustment. The Design-Builder may elect to participate in the Steel/Iron Price Adjustment for some, all, or none of these identified materials, so long as it is indicated on Form PA and submitted on the Proposal Due Date along with their Price Proposal.

SP-16. DOCUMENT CONTROL MANAGEMENT AND REPORTING

Overview

The Design-Builder shall furnish, maintain, manage, and provide licensing for a web-based document control software to prepare, electronically submit, process, comment, and send project documents, including design drawings, shop drawings, requests for information, meeting minutes, CPM schedules, letters, management plans, and other standard NYSDOT Design-Build contract business practices as requested by the Department's Project Manager. The software shall provide a means to report in "real-time" the status of design and construction deliverables and shall utilize ball-in-court capability. The web-based tool shall allow simultaneous access across the project including the Design-Builder, the Department, and any of the Department's oversight team members. User access shall be customized as required by the Design-Build team on a "per project role" basis. The web-based tool shall report, at a minimum, the metrics listed here-in and it shall be the responsibility of the Design-Builder to ensure that the metrics reported to the project team are adequate to provide an accurate picture of the current status of the Project. At a minimum, data reported on the web-based tool shall be updated and presented at weekly progress meetings.

The web-based tool shall provide a means to notify the Project team when design and/or construction deliverables are submitted and shall include a hyperlink directing the User to the respective documents. The software shall timestamp the correspondence, and log the date/time of each submission. Final project documents shall be uploaded to ProjectWise in accordance with RFP, Part 3, Section 2.7 Project Wise.

Reporting Dashboard

The web-based tool shall provide a dashboard style interface which allows simultaneous access across the Project team for clear and concise reporting of Project information. The Dashboard shall report on, but not be limited to, the following items as they relate to design and construction status.

• Design Deliverables Submitted To-Date

• 4-Week Design Deliverable Look Ahead

• 90-Day Design Deliverable Look Ahead

• Status of Design Reviews by the Department

• Status of Released-for-Construction (RFC) Documents

• Status of Notice-of-Design Changes (NDCs)

• Status of Design Requests-for-Information (Design RFIs)

• Status of Design Non-Conformance Reports (Design NCRs)

• Status of Construction Requests-for-Information (Construction RFIs)

• Status of Construction Submittals

• Status of Construction Non-Conformance Reports (Construction NCRs)

Design Review Interface

The web-based tool shall facilitate a means for the Department to provide consultation and written comment, and shall report on the Design Review Status in order for all parties to quickly identify the status of any deliverable at a given time. At the Design Management Workshop, the Design-Builder shall present the proposed workflow to the Department to establish proper distribution of documents and execution of the established workflow.

All costs associated with furnishing, maintaining, and using the software, including user licenses and training for both the Design-Builder and the Department, shall be included in the price bid for Item 800.01000015, *Design Build – Design Services*.

SP-17. RISK REGISTER

NYSDOT RISK REGISTER
D900056 - I81 Viaduct Project - Phase 1, Contract 2

Legend	Low	Med	High	
Probability	< 30%	30% to 70%	> 70%	
Cost	< 5%	5% to 20%	> 20%	
Time/Schedule	< =10 days	11 to 30 days	> 30 days	calendar days
Rating Value	(1, 2,or 3)	(4, 5, 6, or 7)	(8, 9, or 10)	
Priority Score	1 to 9	10 to 21	22 or above	

Risk #	Risk Name/ Statement	Risk Owner	Phase	Risk Category	Impact if Risk Occurs	Rate Probability (1 - 10)	Rate Time (1 - 10)	Rate Cost (1 - 10)	Priority Score	Response Strategy
1	Material availability, price volatility, and/or supply chain issues.	DB Firm	Construction	Cost Escalation and Project Delivery	Schedule delays and increased cost.	7	7	7	49	
2	Project schedule is aggressive which provides minimal float.	DB Firm	Design and Construction	Project Delivery	Schedule delays and increased cost.	7	7	7	49	
3	CSX spotters/flaggers are not available when needed.	DB Firm	Construction	Schedule	Schedule delays.	6	9	4	39	
4	Due to large scale of project, potential of insufficient labor forces, including those experienced in heavy highway construction.	DB Firm	Construction	Project Delivery	Schedule delays and increased cost.	7	5	5	35	
5	Coordination of work zones, closures, and site access with other ongoing projects (refer to RFP Part 3, Section 1.4 for list of potential conflicts in/near Contract limits).	DB Firm	Design and Construction	Project Delivery and Schedule	Schedule delays.	7	5	5	35	
6	CSX does not provide timely responses to design units and work plan submissions.	DB Firm	Design and Construction	Project Delivery	Schedule delays.	5	9	3	30	
7	Delays in review of design submittal packages for agencies - NYSDEC, Army Corps, OCDWEP, City of Syracuse.	DB Firm	Design/Construction	Schedule	Schedule delays and increased cost.	4	9	3	24	
8	Construction in the Southern Interchange reveals unexpected sinkholes.	DB Firm	Construction	Schedule	Schedule delays and increased cost.	5	5	4	23	
9	Due to large scale of project, aggressive schedule and loss of some senior staff due to retirements, project team, including support units, could be inexperienced, overburdened and not have sufficient time to plan and handle workload required.	NYSDOT	Procurement and Construction	Project Staff	Delay in important milestone deliverables, reviews, design errors.	7	3	3	21	The Department will utilize and meet routinely with consultants.
10	Unknown utilities/abandoned utilities/utility locations.	DB Firm	Construction	Utility Delays	Schedule delays and increased cost.	5	5	3	20	

11	Potential for significant impacts not evaluated in the FEIS resulting in SEIS.	NYSDOT	Design/Construction	Project Delivery	Project is delayed.	3	7	5	18	The Department will work with contractor(s) to avoid project changes that could result in the potential for significant impacts that were not evaluated in the FEIS.
12	Severe weather, such as lake effect snow, limits amount of time contractor can perform some types of work.	DB Firm	Construction	Project Delivery	Schedule delays and increased cost.	8	2	2	16	
13	Obtaining additional subsurface information while meeting design and construction milestones for an aggressive project schedule.	DB Firm	Design and Construction	Project Delivery	Schedule delays and increased cost.	5	3	3	15	

SP-18. CITY OF SYRACUSE LOCAL SPECIFICATIONS AND REQUIREMENTS

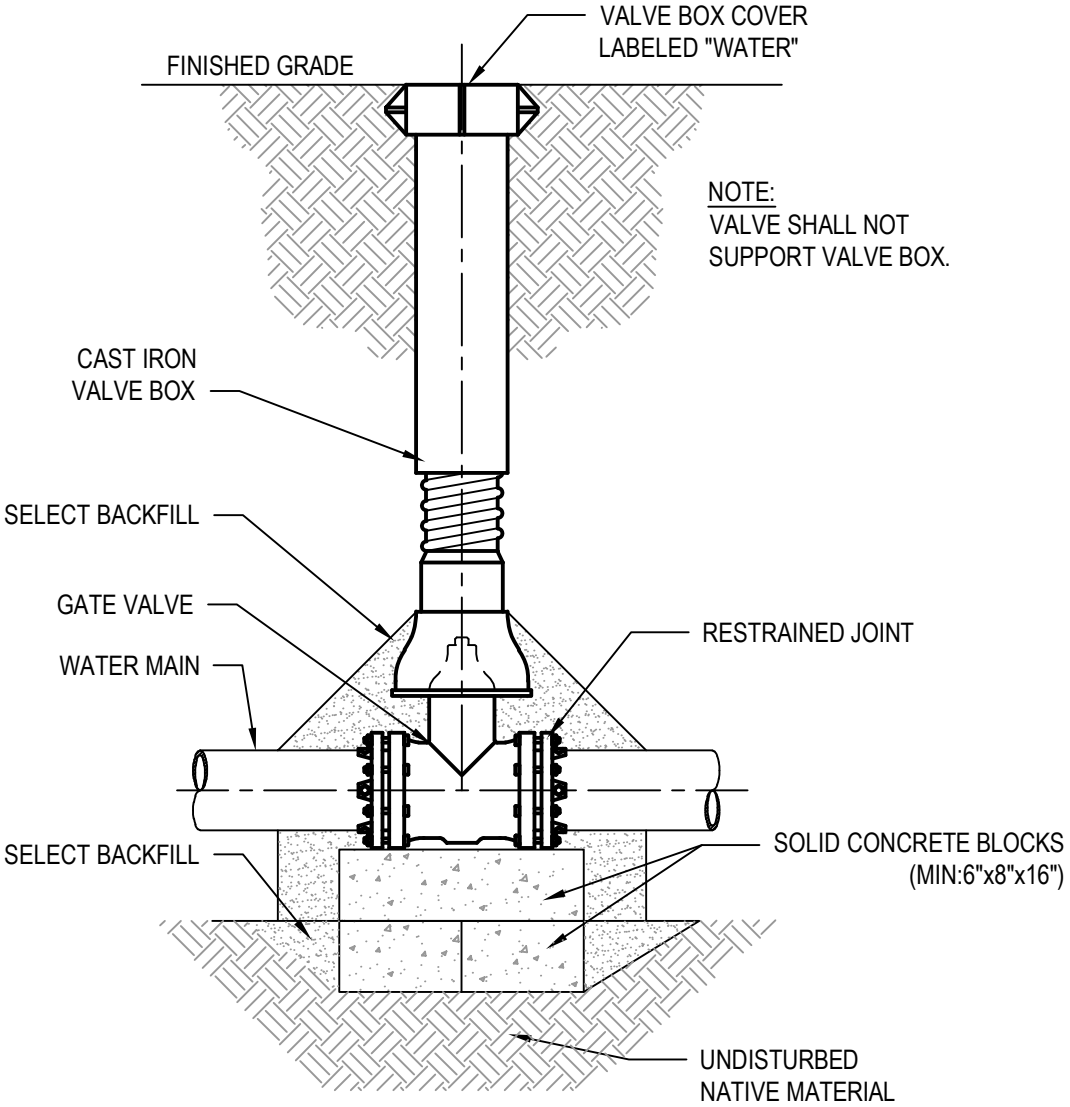

GATE VALVE ASSEMBLY DETAIL

NOT TO SCALE

IT IS VIOLATION OF NEW YORK STATE EDUCATION LAW FOR ANY PERSON, UNLESS ACTING UNDER THE DIRECTION OF A LICENSED PROFESSIONAL ENGINEER, TO ALTER AN ITEM ON THIS DRAWING IN ANYWAY. IF AN ITEM IS ALTERED, THE ALTERING ENGINEER SHALL AFFIX TO THE ITEM HIS/HER SEAL AND THE NOTATION "ALTERED BY" FOLLOWED BY HIS/HER SIGNATURE AND DATE OF SUCH ALTERATION AND A SPECIFIC DESCRIPTION OF THE ALTERATION.

CITY OF SYRACUSE
DEPARTMENT OF WATER

101 N. BEECH ST. SYRACUSE, NY 13210

GATE VALVE ASSEMBLY DETAIL

W-01

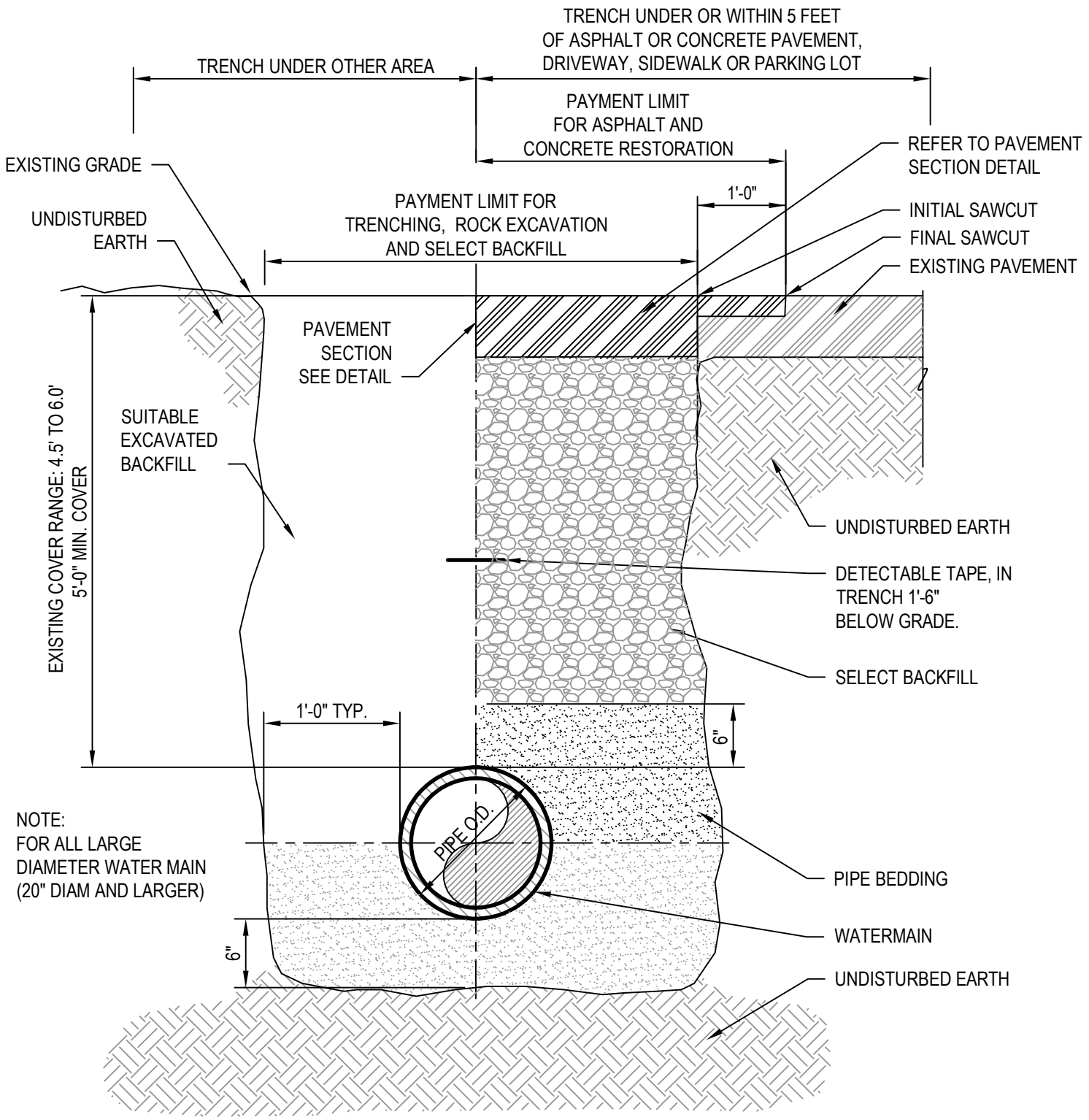

TRENCH THROUGH 16" DIAM. PIPE DETAIL

NOT TO SCALE

IT IS VIOLATION OF NEW YORK STATE EDUCATION LAW FOR ANY PERSON, UNLESS ACTING UNDER THE DIRECTION OF A LICENSED PROFESSIONAL ENGINEER, TO ALTER AN ITEM ON THIS DRAWING IN ANYWAY. IF AN ITEM IS ALTERED, THE ALTERING ENGINEER SHALL AFFIX TO THE ITEM HIS/HER SEAL AND THE NOTATION "ALTERED BY" FOLLOWED BY HIS/HER SIGNATURE AND DATE OF SUCH ALTERATION AND A SPECIFIC DESCRIPTION OF THE ALTERATION.

CITY OF SYRACUSE
DEPARTMENT OF WATER

101 N. BEECH ST. SYRACUSE, NY 13210

TRENCHING DETAIL

W-02

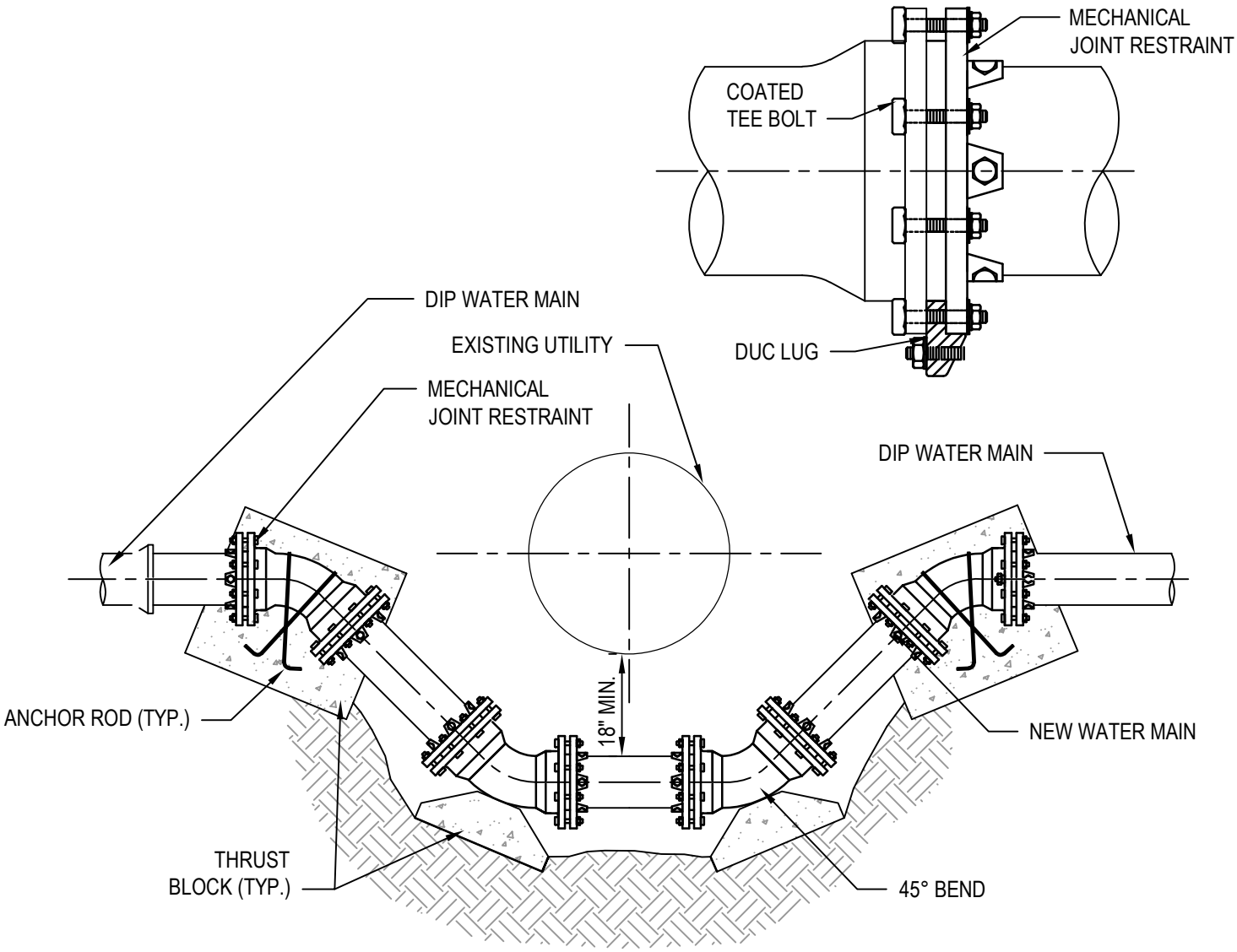

SECTION

NTS

NOTES:

1. RESTRAINED MECHANICAL JOINTS AS SHOWN.
2. VALVES, TEES AND HYDRANTS MAY BE RESTRAINED SIMILARLY.
3. ONE FULL PIPE LENGTH SHALL BE CENTERED UNDER THE EXISTING UTILITY CROSSING.
4. WATER MAIN JOINTS SHALL BE PLACED EQUIDISTANT FROM THE EXISTING UTILITY AT THE CROSSING..
5. IF EXISTING PIPE IS CIP CONNECT TO NEW FITTING ONLY WHEN ALLOWED BY ENGINEER.

WATER MAIN RELOCATION DETAIL (TYP.)

NOT TO SCALE

IT IS VIOLATION OF NEW YORK STATE EDUCATION LAW FOR ANY PERSON, UNLESS ACTING UNDER THE DIRECTION OF A LICENSED PROFESSIONAL ENGINEER, TO ALTER AN ITEM ON THIS DRAWING IN ANYWAY. IF AN ITEM IS ALTERED, THE ALTERING ENGINEER SHALL AFFIX TO THE ITEM HIS/HER SEAL AND THE NOTATION "ALTERED BY" FOLLOWED BY HIS/HER SIGNATURE AND DATE OF SUCH ALTERATION AND A SPECIFIC DESCRIPTION OF THE ALTERATION.

CITY OF SYRACUSE
DEPARTMENT OF WATER

101 N. BEECH ST. SYRACUSE, NY 13210

WATER MAIN RELOCATION DETAIL

W-03

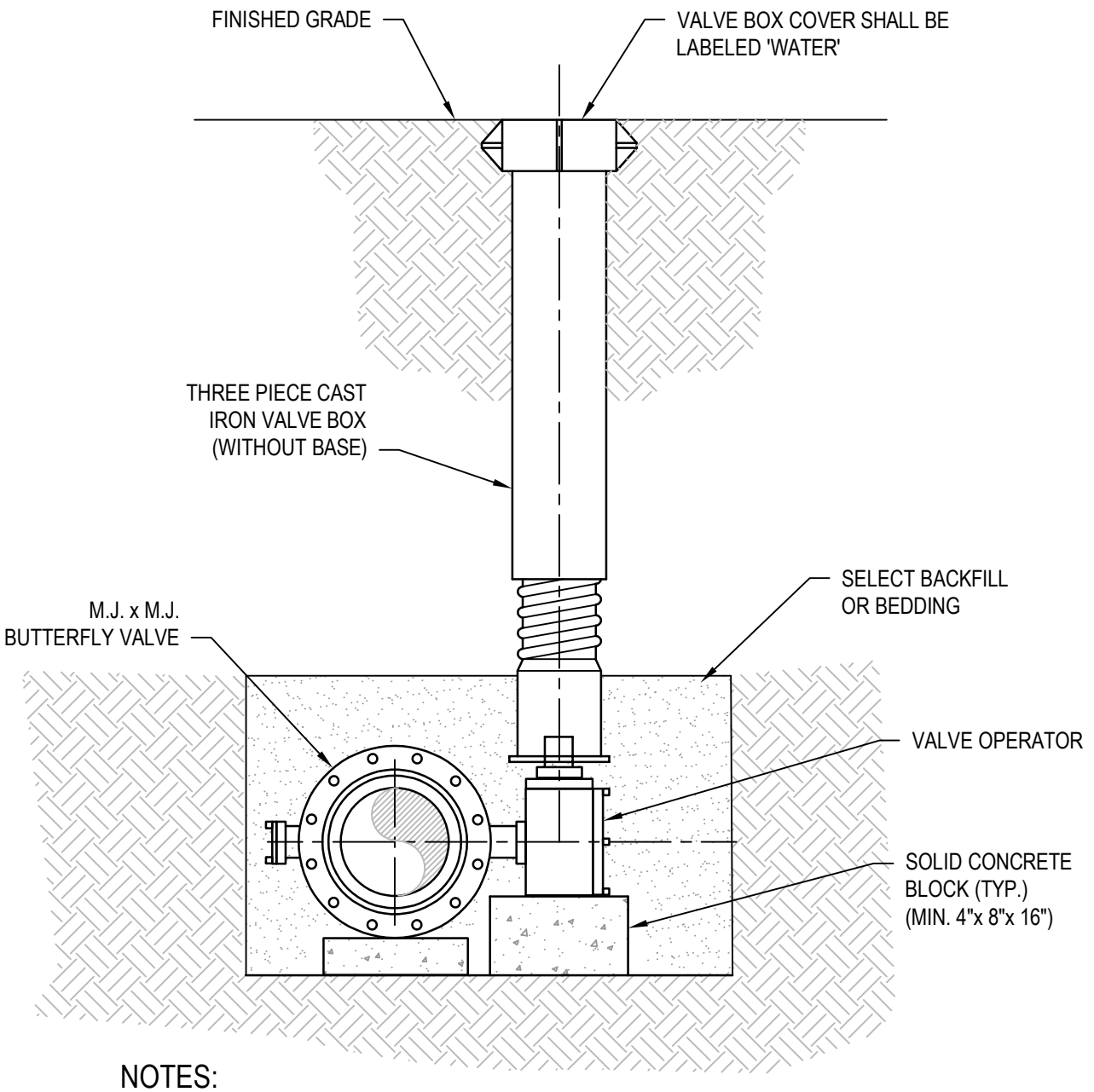

NOTES:

1. VALVE SHALL NOT SUPPORT VALVE BOX.
2. POSITION VALVE SO THAT OPERATOR IS ON SIDE OF WATER MAIN OPPOSITE THE ℄ OF ROADWAY.
3. VALVE 16" OR LARGER SHALL BE A BUTTER FLY VALVE UNLESS OTHERWISE IDENTIFIED BY OWNER

BUTTERFLY VALVE INSTALLATION (TYP.)

NOT TO SCALE

IT IS VIOLATION OF NEW YORK STATE EDUCATION LAW FOR ANY PERSON, UNLESS ACTING UNDER THE DIRECTION OF A LICENSED PROFESSIONAL ENGINEER, TO ALTER AN ITEM ON THIS DRAWING IN ANYWAY. IF AN ITEM IS ALTERED, THE ALTERING ENGINEER SHALL AFFIX TO THE ITEM HIS/HER SEAL AND THE NOTATION "ALTERED BY" FOLLOWED BY HIS/HER SIGNATURE AND DATE OF SUCH ALTERATION AND A SPECIFIC DESCRIPTION OF THE ALTERATION.

CITY OF SYRACUSE
DEPARTMENT OF WATER

101 N. BEECH ST. SYRACUSE, NY 13210

BUTTERFLY VALVE INSTALLATION DETAIL

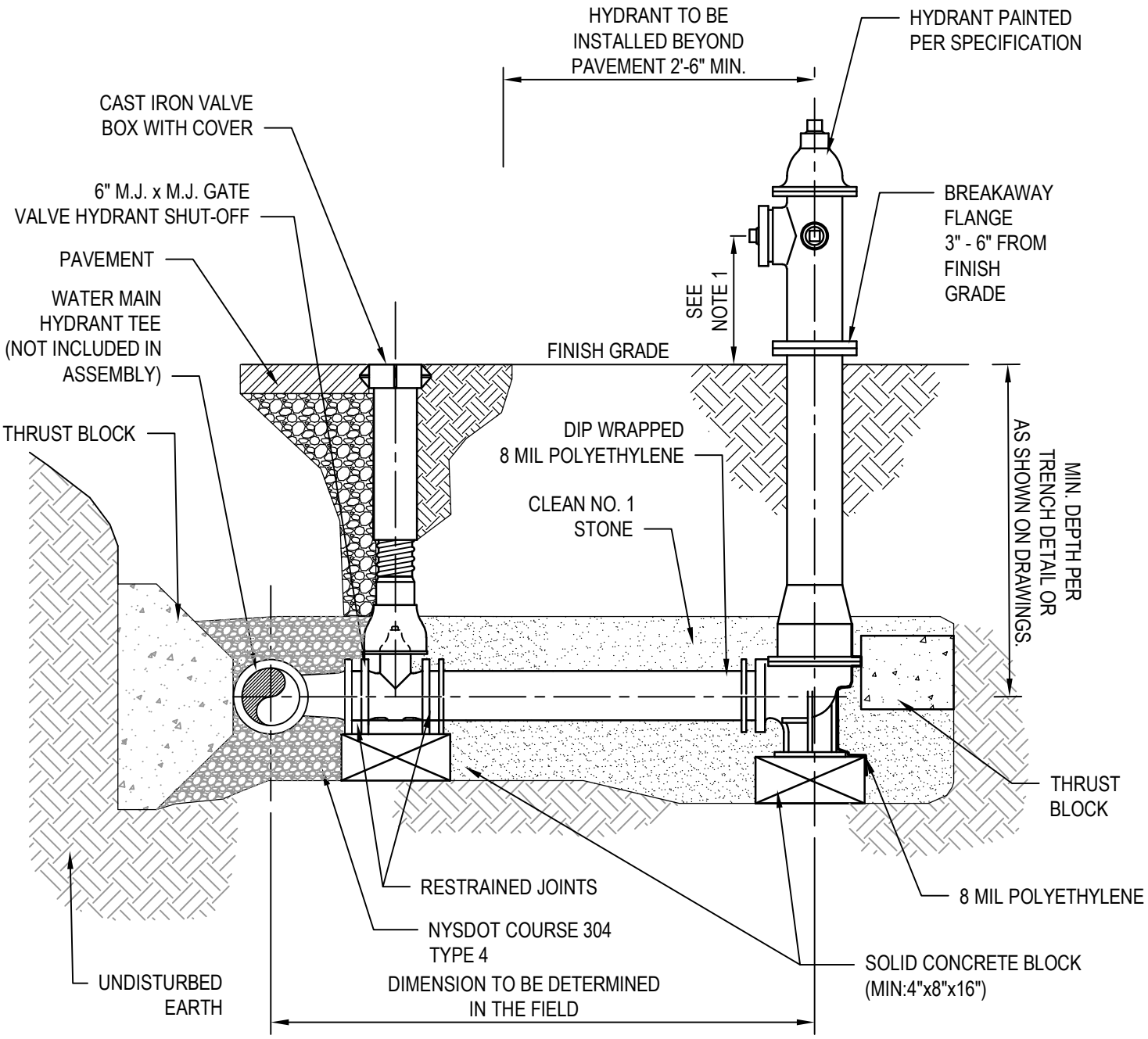

NOTES:

1. CENTERLINE OF THE LOWEST NOZZLE TO FINISHED GRADE SHALL BE A MIN. OF 24" & MAX. OF 30".
2. HYDRANT RISER SHALL BE INSTALLED PLUMB.
3. HYDRANT LATERAL LONGER THAN 6'-6", SHALL BE PAID UNDER THE PAYMENT ITEM NO. PI-W1.1 OR PI-W2.1

FIRE HYDRANT ASSEMBLY INSTALLATION (TYP.)

NOT TO SCALE

IT IS VIOLATION OF NEW YORK STATE EDUCATION LAW FOR ANY PERSON, UNLESS ACTING UNDER THE DIRECTION OF A LICENSED PROFESSIONAL ENGINEER, TO ALTER AN ITEM ON THIS DRAWING IN ANYWAY. IF AN ITEM IS ALTERED, THE ALTERING ENGINEER SHALL AFFIX TO THE ITEM HIS/HER SEAL AND THE NOTATION "ALTERED BY" FOLLOWED BY HIS/HER SIGNATURE AND DATE OF SUCH ALTERATION AND A SPECIFIC DESCRIPTION OF THE ALTERATION.

CITY OF SYRACUSE
DEPARTMENT OF WATER

101 N. BEECH ST. SYRACUSE, NY 13210

HYDRANT ASSEMBLY INSTALLATION DETAIL

W-05

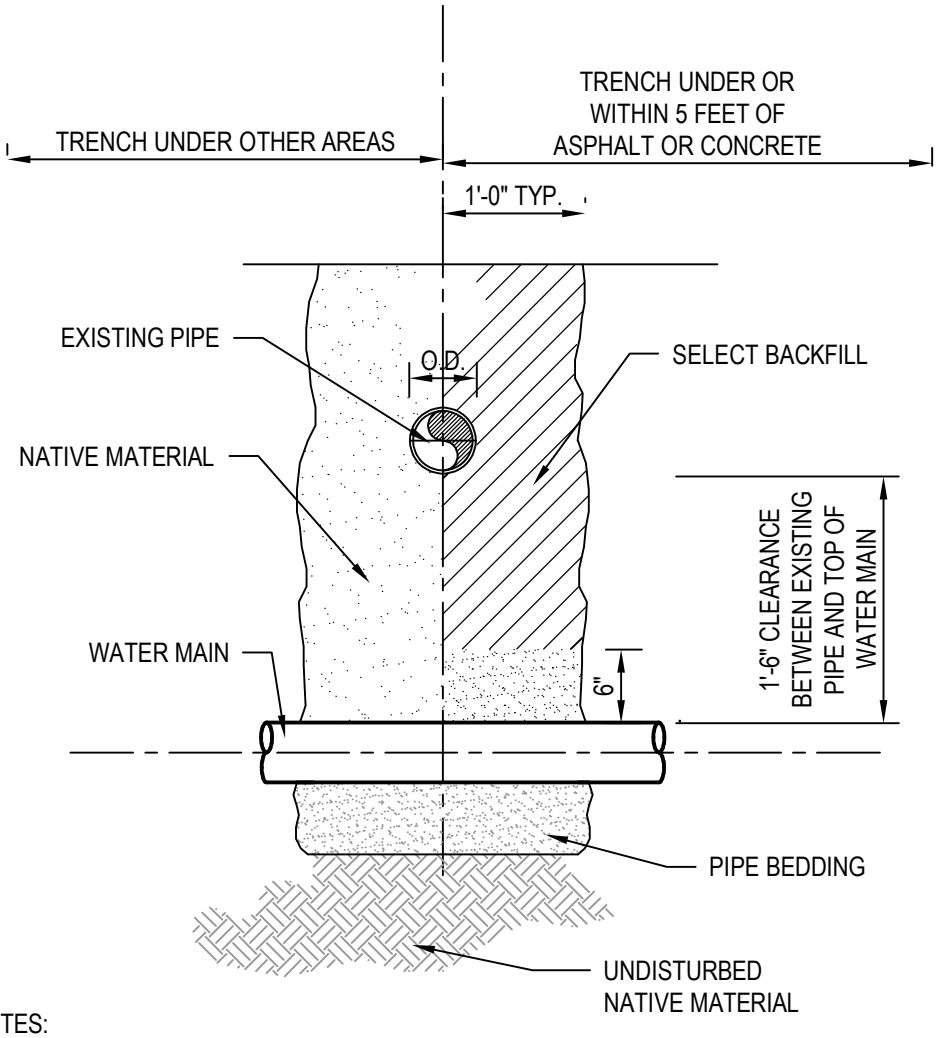

NOTES:

1. ALL EXISTING UTILITIES MUST BE SUPPORTED DURING CONSTRUCTION OF THE NEW WATER MAIN.

2. WHEN CROSSING A SEWER LINE WITH A NEW WATER MAIN, ONE FULL PIPE LENGTH (18 FT. MIN.) SHALL BE USED AT THE POINT OF CROSSING. THE WATER MAIN SHALL BE PLACED SO THAT BOTH JOINT ENDS ARE AS FAR AS POSSIBLE FROM THE EXISTING SEWER LINE.

3. WHENEVER REQUIRED VERTICAL CLEARANCE CAN NOT BE OBTAINED, THE SEWER SHALL BE ENCASED IN CONCRETE FOR A DISTANCE OF 10' EITHER SIDE OF THE INTERSECTION WITH THE WATER MAIN AS INSTRUCTED BY THE ENGINEER. CLEARANCE REQUIREMENTS SHALL BE THE RECOMMENDED STANDARDS FOR WATER WORKS. ALSO REQUIRED IS A 10' MINIMUM HORIZONTAL SEPARATION BETWEEN SEWERS AND WATER MAINS

WATER /SEWER SEPARATION (TYP.)

NOT TO SCALE

IT IS VIOLATION OF NEW YORK STATE EDUCATION LAW FOR ANY PERSON, UNLESS ACTING UNDER THE DIRECTION OF A LICENSED PROFESSIONAL ENGINEER, TO ALTER AN ITEM ON THIS DRAWING IN ANYWAY. IF AN ITEM IS ALTERED, THE ALTERING ENGINEER SHALL AFFIX TO THE ITEM HIS/HER SEAL AND THE NOTATION "ALTERED BY" FOLLOWED BY HIS/HER SIGNATURE AND DATE OF SUCH ALTERATION AND A SPECIFIC DESCRIPTION OF THE ALTERATION.

CITY OF SYRACUSE
DEPARTMENT OF WATER

101 N. BEECH ST. SYRACUSE, NY 13210

WATER - SEWER SEPARATION DETAIL

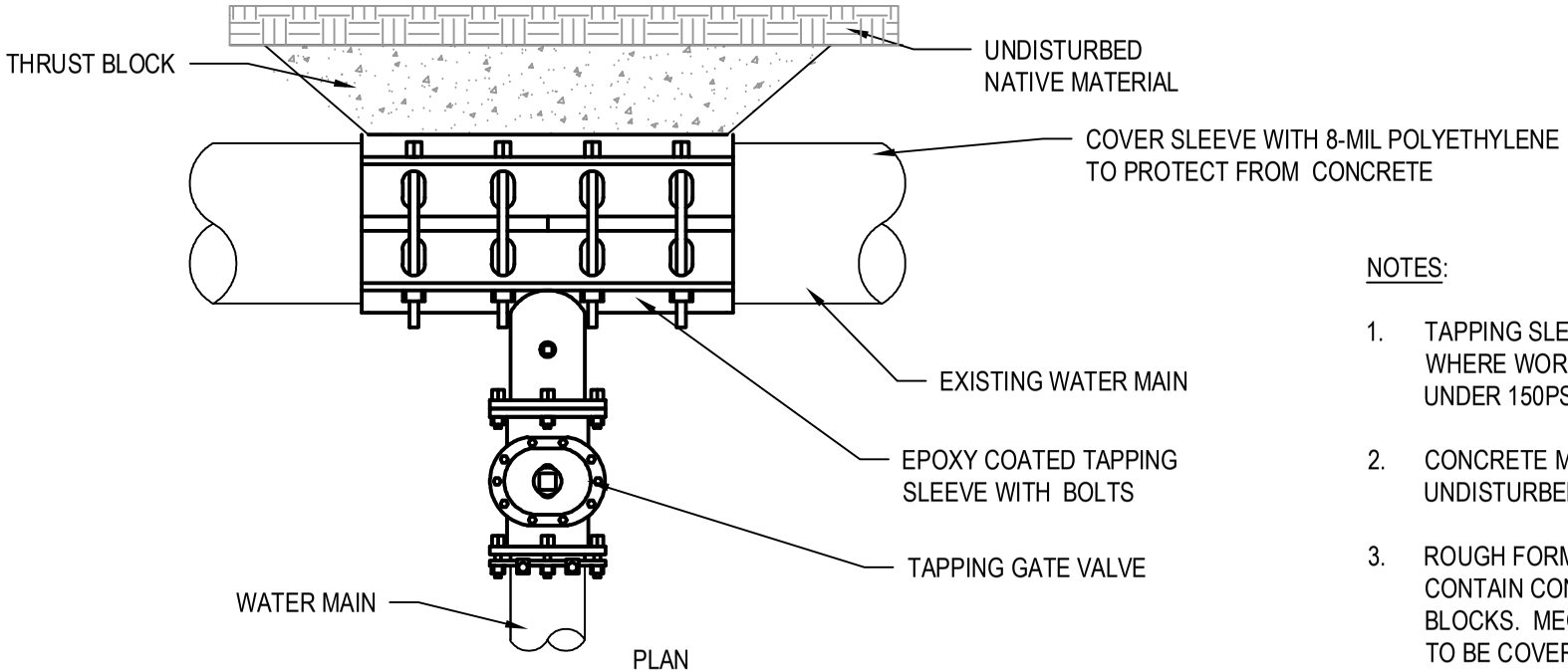

PLAN
NTS

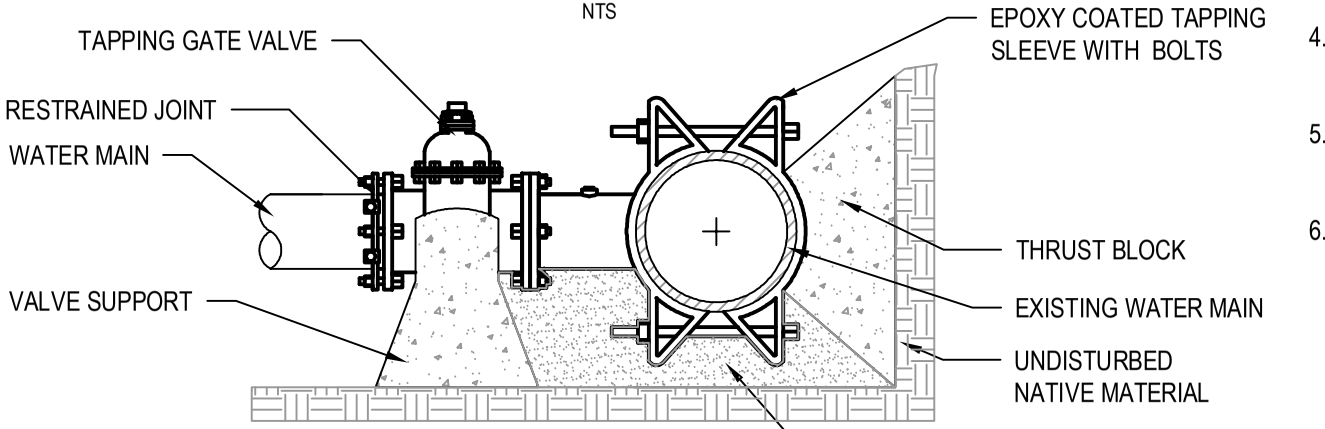

SECTION
NTS

NOTES:

1. TAPPING SLEEVE IS APPROVED FOR USE WHERE WORKING PRESSURES ARE UNDER 150PSI.
2. CONCRETE MUST BEAR UPON UNDISTURBED NATIVE MATERIAL
3. ROUGH FORMS SHALL BE USED TO CONTAIN CONCRETE FOR THRUST BLOCKS. MECHANICAL JOINTS ARE NOT TO BE COVERED.
4. ALLOW POURED CONCRETE THRUST BLOCKS TO SET PRIOR TO BACKFILLING.
5. ALL PIPE AND FITTINGS TO BE WRAPPED POLYETHYLENE ENCASEMENT.
6. ALL FITTINGS ARE TO BE MECHANICALLY RESTRAINED

TAPPING SLEEVE (LIVE TAP) WITH THRUST BLOCK

NOT TO SCALE

IT IS VIOLATION OF NEW YORK STATE EDUCATION LAW FOR ANY PERSON, UNLESS ACTING UNDER THE DIRECTION OF A LICENSED PROFESSIONAL ENGINEER, TO ALTER AN ITEM ON THIS DRAWING IN ANYWAY. IF AN ITEM IS ALTERED, THE ALTERING ENGINEER SHALL AFFIX TO THE ITEM HIS/HER SEAL AND THE NOTATION "ALTERED BY" FOLLOWED BY HIS/HER SIGNATURE AND DATE OF SUCH ALTERATION AND A SPECIFIC DESCRIPTION OF THE ALTERATION.

CITY OF SYRACUSE
DEPARTMENT OF WATER
101 N. BEECH ST.
SYRACUSE, NY 13210

TAPPING SLEEVE AND VALVE DETAIL

W-09

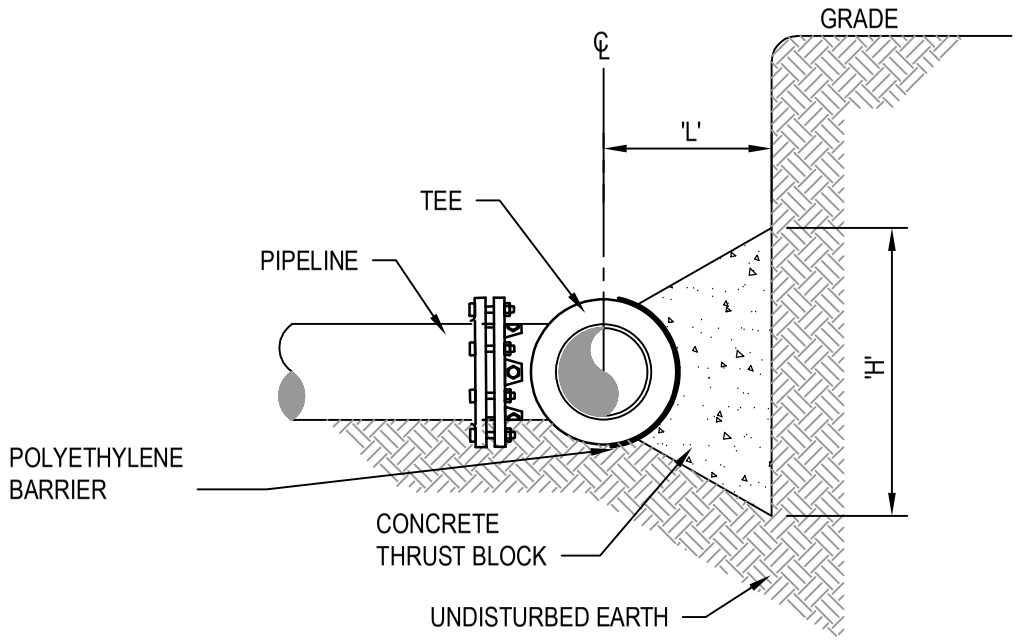

SECTION

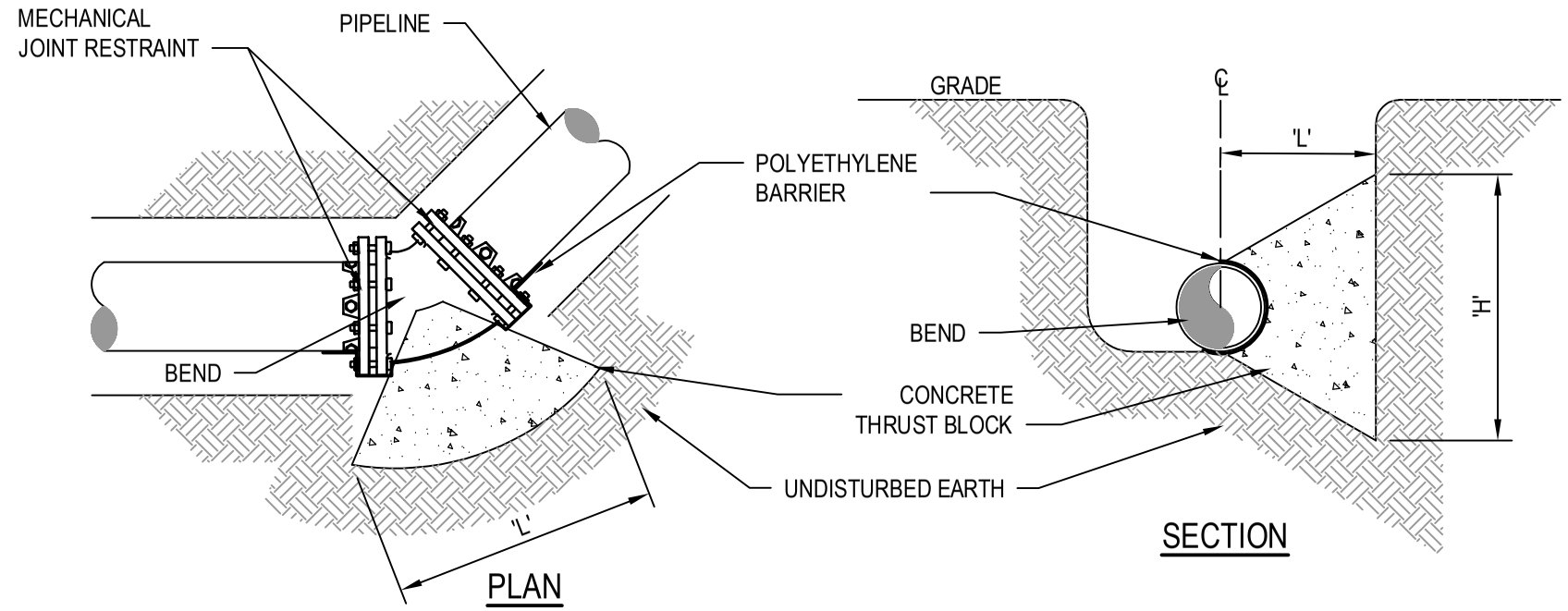

PLAN

SECTION

HORIZONTAL THRUST BLOCK FOR BENDS

NTS

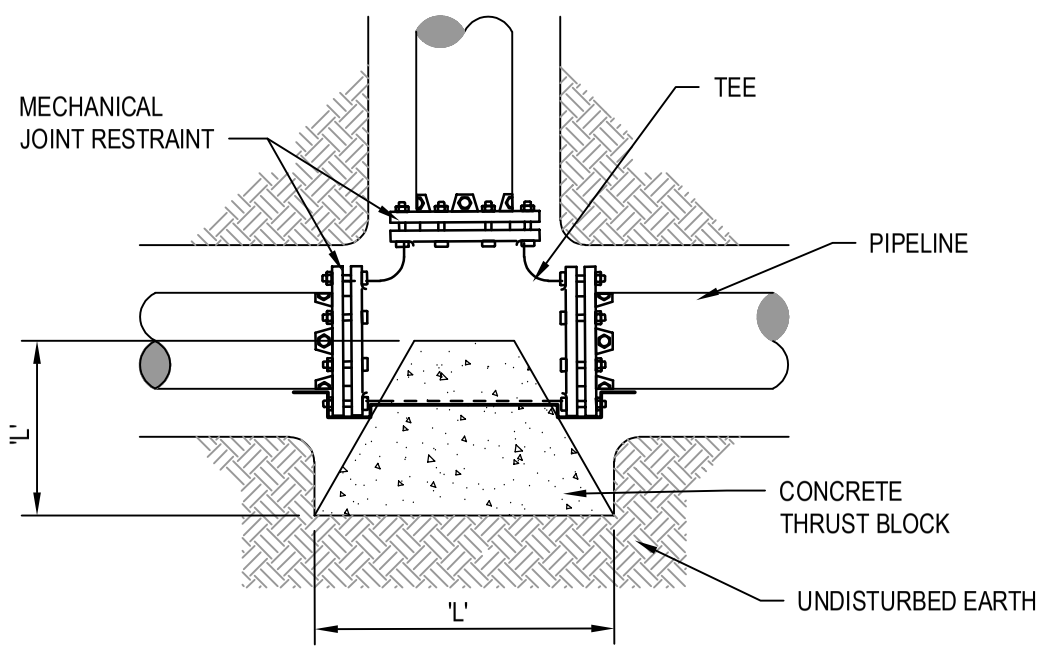

PLAN

HORIZONTAL THRUST BLOCK FOR TEES

NTS

HORIZONTAL ANCHOR DIMENSIONS FOR AVERAGE SOIL CONDITIONS										
UP TO 150 P.S.I. WORKING PRESSURE										
PIPE SIZE	PLUG, CAP, TEE OR TAP SLEEVE		90° BEND		45° BEND		22 1/2° BEND		11 1/4° BEND	
	H	L	H	L	H	L	H	L	H	L
6"	1'-0"	2'-0"	1'-0"	2'-0"	1'-0"	1'-4"	0'-9"	1'-0"	0'-6"	1'-0"
8"	1'-4"	2'-8"	1'-4"	2'-8"	1'-4"	1'-6"	1'-0"	1'-0"	0'-9"	1'-0"
12"	2'-0"	4'-0"	2'-0"	4'-0"	2'-0"	2'-2"	1'-6"	1'-6"	1'-3"	1'-3"
14"	2'-4"	4'-8"	2'-4"	4'-8"	2'-4"	2'-6"	1'-9"	1'-9"	1'-4"	1'-4"
16"	2'-8"	5'-4"	2'-8"	5'-4"	2'-8"	3'-0"	2'-0"	2'-0"	1'-6"	1'-6"

NOTES:

1. SIZES BASED ON 150 PSI PRESSURE IN PIPELINE AND 2,000 PSF SOIL BEARING STRENGTH.
2. ALL EXPOSED PORTIONS OF ANCHOR STRAPS TO RECEIVE A MINIMUM OF 2 FIELD COATS OF BITUMASTIC MATERIAL.
3. PRIOR TO PLACING CONCRETE WRAP ANCHORS & ALL FITTINGS IN 8-MIL THICK POLYTHENE.
4. ALL ANCHOR RODS SHALL BE TYPE 304 STAINLESS STEEL.

THRUST BLOCK - HORIZONTAL (TYP.)

NOT TO SCALE

IT IS VIOLATION OF NEW YORK STATE EDUCATION LAW FOR ANY PERSON, UNLESS ACTING UNDER THE DIRECTION OF A LICENSED PROFESSIONAL ENGINEER, TO ALTER AN ITEM ON THIS DRAWING IN ANYWAY. IF AN ITEM IS ALTERED, THE ALTERING ENGINEER SHALL AFFIX TO THE ITEM HIS/HER SEAL AND THE NOTATION "ALTERED BY" FOLLOWED BY HIS/HER SIGNATURE AND DATE OF SUCH ALTERATION AND A SPECIFIC DESCRIPTION OF THE ALTERATION.

CITY OF SYRACUSE
DEPARTMENT OF WATER
101 N. BEECH ST.
SYRACUSE, NY 13210

THRUST BLOCK HORIZONTAL DETAIL

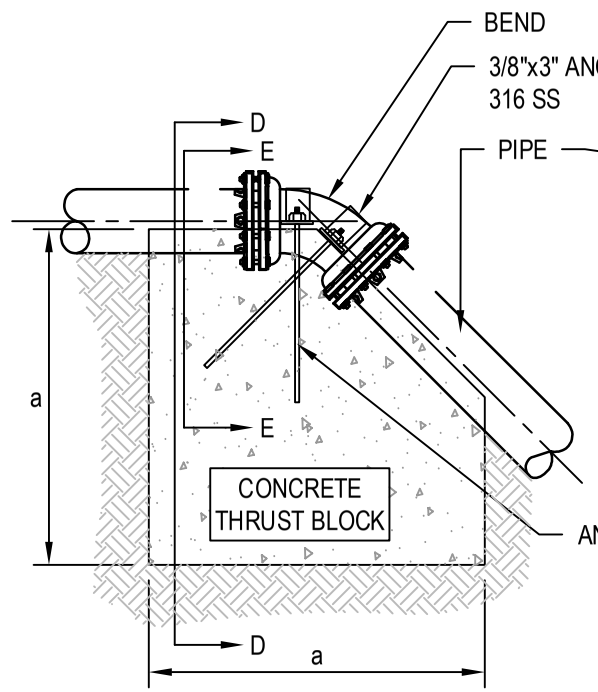

ELEVATION

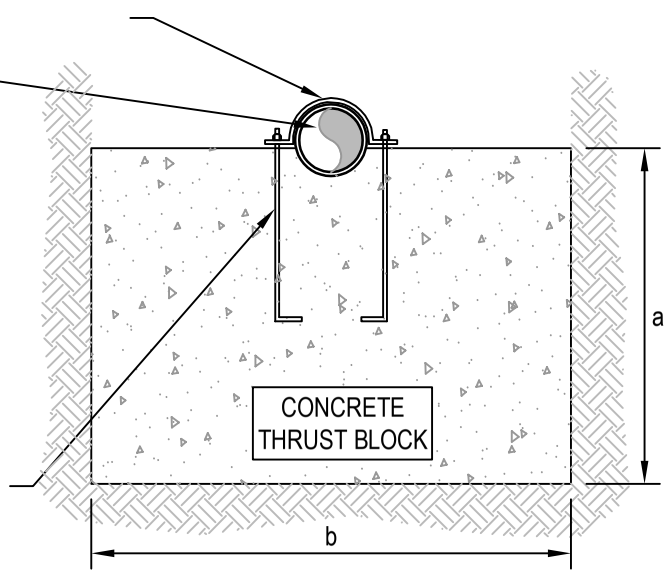

SECTION DD

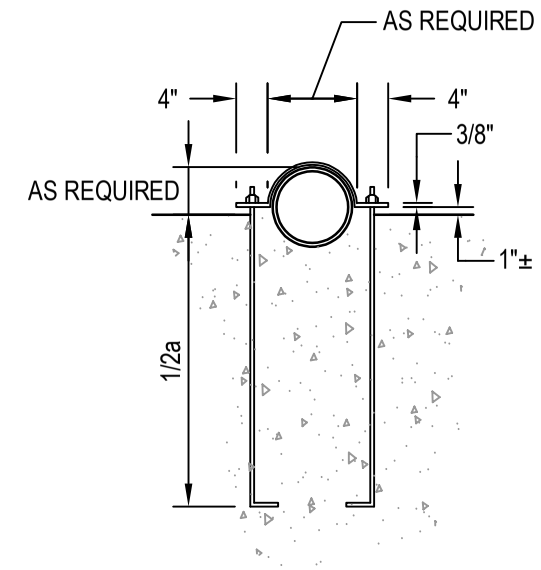

SECTION EE

VERTICAL ANCHOR DIMENSIONS

UP TO 150 P.S.I. WORKING PRESSURE

PIPE SIZE	45° BEND DIMENSION a	45° BEND DIMENSION b	45° BEND DIMENSION c	45° BEND ROD Ø	22 1/2° BEND DIMENSION a	22 1/2° BEND DIMENSION b	22 1/2° BEND DIMENSION c	22 1/2° BEND ROD Ø	11 1/4° BEND DIMENSION a	11 1/4° BEND DIMENSION b	11 1/4° BEND DIMENSION c	11 1/4° BEND ROD Ø
6"	3'-0"	3'-0"	2'-0"	3/4"	2'-6"	2'-3"	1'-6"	3/4"	2'-6"	2'-0"	1'-6"	3/4"
8"	3'-6"	3'-6"	2'-6"	3/4"	3'-0"	3'-0"	1'-9"	3/4"	2'-6"	2'-6"	1'-3"	3/4"
12"	4'-9"	4'-6"	3'-3"	3/4"	4'-0"	3'-9"	2'-6"	3/4"	3'-3"	3'-3"	1'-9"	3/4"
14"	5'-3"	5'-0"	3'-9"	3/4"	4'-3"	4'-3"	2'-6"	3/4"	3'-6"	3'-6"	2'-0"	3/4"
16"	5'-9"	5'-6"	4'-0"	3/4"	4'-9"	4'-6"	2'-9"	3/4"	3'-9"	3'-9"	2'-0"	3/4"

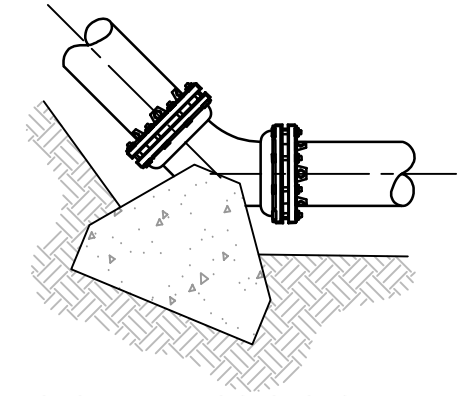

USE SAME DIMENSIONS AS FOR
HORIZONTAL BEND ANCHORS

VERTICAL
THRUST BLOCK FOR BENDS
NOT TO SCALE

NOTES:

1. SIZES BASED ON 150 PSI PRESSURE IN PIPELINE AND 2,000 PSF SOIL BEARING STRENGTH.
2. ALL EXPOSED PORTIONS OF ANCHOR STRAPS TO RECEIVE A MINIMUM OF 2 FIELD COATS OF BITUMASTIC MATERIAL.
3. PRIOR TO PLACING CONCRETE WRAP ANCHORS & ALL FITTINGS IN 8-MIL THICK POLYTHENE.
4. ALL ANCHOR RODS SHALL BE TYPE 304 STAINLESS STEEL.

- / -

THRUST BLOCK - VERTICAL (TYP.)

SCALE : NONE

IT IS VIOLATION OF NEW YORK STATE EDUCATION LAW FOR ANY PERSON, UNLESS ACTING UNDER THE DIRECTION OF A LICENSED PROFESSIONAL ENGINEER, TO ALTER AN ITEM ON THIS DRAWING IN ANYWAY. IF AN ITEM IS ALTERED, THE ALTERING ENGINEER SHALL AFFIX TO THE ITEM HIS/HER SEAL AND THE NOTATION "ALTERED BY" FOLLOWED BY HIS/HER SIGNATURE AND DATE OF SUCH ALTERATION AND A SPECIFIC DESCRIPTION OF THE ALTERATION.

CITY OF SYRACUSE
DEPARTMENT OF WATER
101 N. BEECH ST.
SYRACUSE, NY 13210

THRUST BLOCK VERTICAL DETAIL

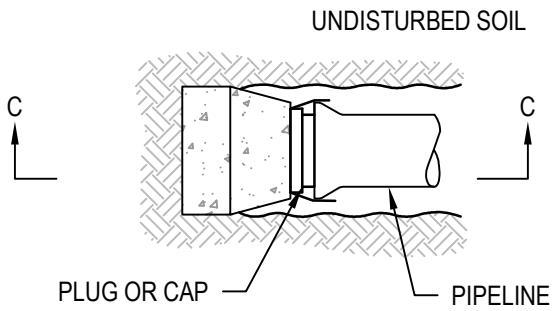

PLAN

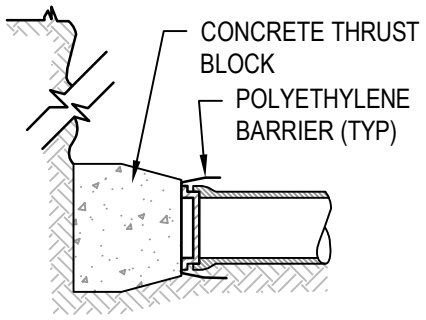

SECTION C-C

NOTES:
1. INSTALL POLYETHYLENE BARRIER PRIOR TO PLACING CONCRETE.
2. FOR DIMENSION SIZING, USE CHART FOR HORIZONTAL THRUST BLOCKS.

- / -

THRUST BLOCK - PLUG AND CAP

SCALE : NONE

IT IS VIOLATION OF NEW YORK STATE EDUCATION LAW FOR ANY PERSON, UNLESS ACTING UNDER THE DIRECTION OF A LICENSED PROFESSIONAL ENGINEER, TO ALTER AN ITEM ON THIS DRAWING IN ANYWAY. IF AN ITEM IS ALTERED, THE ALTERING ENGINEER SHALL AFFIX TO THE ITEM HIS/HER SEAL AND THE NOTATION "ALTERED BY" FOLLOWED BY HIS/HER SIGNATURE AND DATE OF SUCH ALTERATION AND A SPECIFIC DESCRIPTION OF THE ALTERATION.

CITY OF SYRACUSE
DEPARTMENT OF WATER

101 N. BEECH ST. SYRACUSE, NY 13210

THRUST BLOCK CAP/PLUG DETAIL

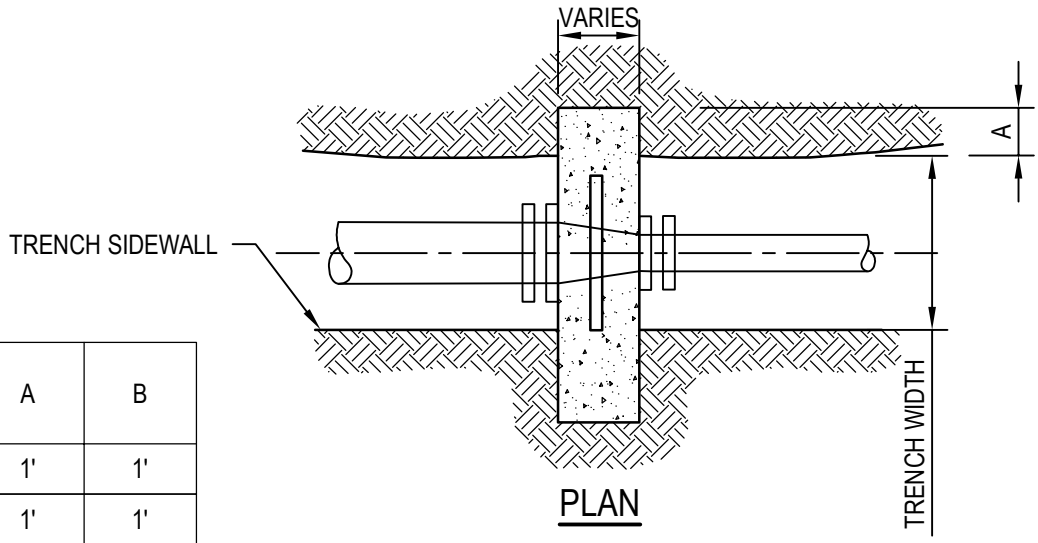

PLAN

NTS

PIPE SIZE	A	B
6" x 4"	1'	1'
8" x 4"	1'	1'
8" x 6"	1'	1'
12" x 4"	2'	2'
12" x 6"	2'	2'
12" x 8"	2'	2'
16" x 6"	2'	2'
16" x 8"	2'	2'
16" x 12"	2'	2'

NOTES:

1. PIPING TO BE POLYETHYLENE WRAPPED PRIOR TO CONCRETE PLACEMENT.
2. USE HIGH EARLY CEMENT AND ALLOW CONCRETE TO ACHIEVE 90% STRENGTH BEFORE PLACING WATER- MAIN INTO SERVICE.

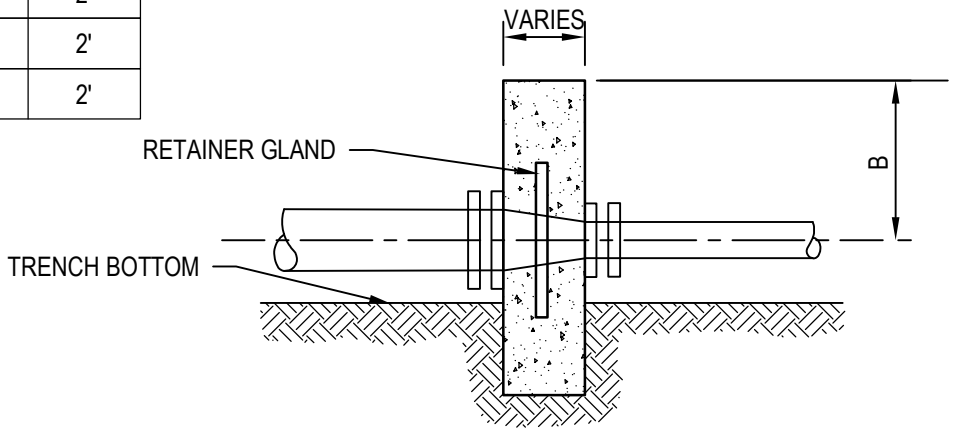

SECTION

NTS

ANCHOR COLLAR FOR REDUCERS

NOT TO SCALE

IT IS VIOLATION OF NEW YORK STATE EDUCATION LAW FOR ANY PERSON, UNLESS ACTING UNDER THE DIRECTION OF A LICENSED PROFESSIONAL ENGINEER, TO ALTER AN ITEM ON THIS DRAWING IN ANYWAY. IF AN ITEM IS ALTERED, THE ALTERING ENGINEER SHALL AFFIX TO THE ITEM HIS/HER SEAL AND THE NOTATION "ALTERED BY" FOLLOWED BY HIS/HER SIGNATURE AND DATE OF SUCH ALTERATION AND A SPECIFIC DESCRIPTION OF THE ALTERATION.

CITY OF SYRACUSE
DEPARTMENT OF WATER

101 N. BEECH ST. SYRACUSE, NY 13210

ANCHOR COLLAR FOR REDUCER DETAIL

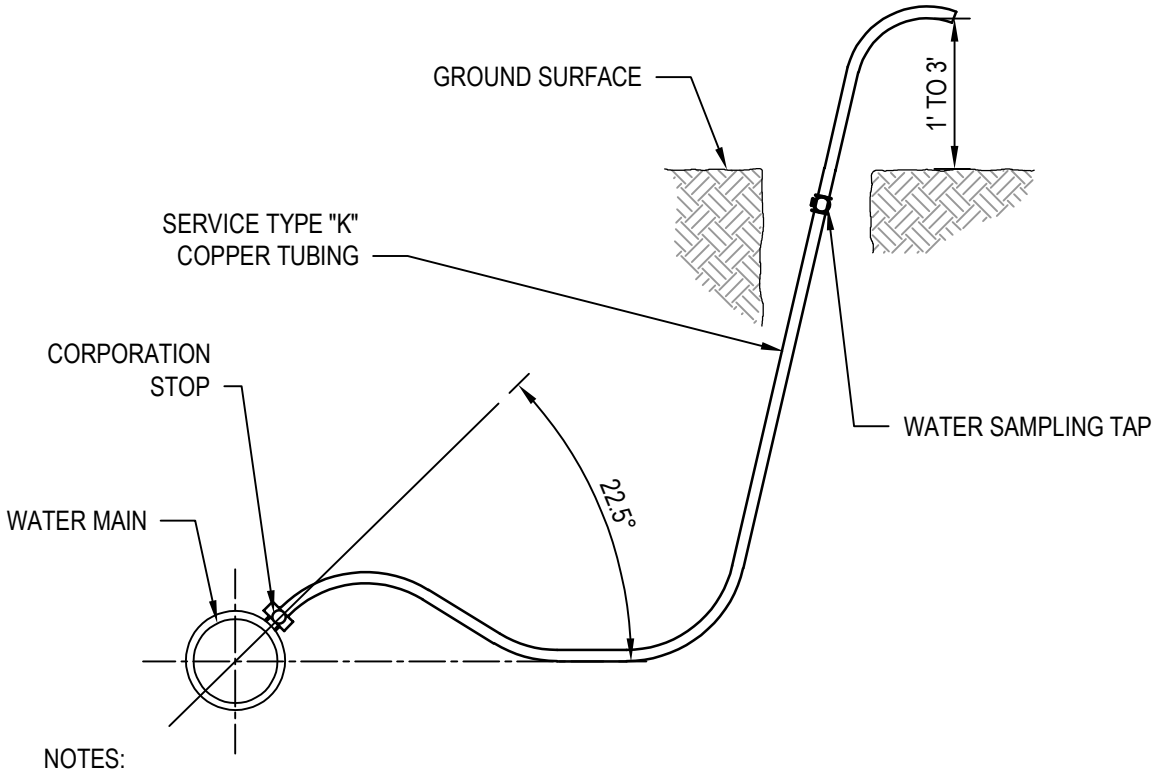

NOTES:

1. WHEN LOCATED IN PAVEMENT, TAP IS TO BE KEPT BELOW GROUND SURFACE EXCEPT WHEN IN USE. UPON NOTIFICATION OF ACCEPTABLE SAMPLE RESULTS, CORPORATION STOP IS TO BE CLOSED, AND TUBING DISCONNECTED AND REMOVED.

2. TAP MAY BE LOCATED AT THE SAME LOCATION OF A NEW WATER SERVICE. AFTER SAMPLE IS APPROVED, COPPER TUBING TO THE SURFACE IS TO BE REMOVED.

3. LOCATION OF TAP IS SUBJECT TO PRIOR APPROVAL OF THE OWNERS REPRESENTATIVE

4. ANY DISINFECTION / SAMPLING TAP NOT USED FOR A WATER SERVICE, MUST BE REMOVED FROM THE WATER MAIN, AND THE THREADED CORPORATION STOP TAP SHALL BE PLUGGED WITH A THREADED BRASS PLUG. AFTER PLUGGING MAIN, COAT BRASS PLUG WITH BITUMASTIC COATING.

5. ALL BRASS AND COPPER SHALL BE LEAD FREE.

WATER DISINFECTION/SAMPLING TAP

NOT TO SCALE

IT IS VIOLATION OF NEW YORK STATE EDUCATION LAW FOR ANY PERSON, UNLESS ACTING UNDER THE DIRECTION OF A LICENSED PROFESSIONAL ENGINEER, TO ALTER AN ITEM ON THIS DRAWING IN ANYWAY. IF AN ITEM IS ALTERED, THE ALTERING ENGINEER SHALL AFFIX TO THE ITEM HIS/HER SEAL AND THE NOTATION "ALTERED BY" FOLLOWED BY HIS/HER SIGNATURE AND DATE OF SUCH ALTERATION AND A SPECIFIC DESCRIPTION OF THE ALTERATION.

CITY OF SYRACUSE
DEPARTMENT OF WATER

101 N. BEECH ST. SYRACUSE, NY 13210

DISINFECTION/SAMPLING TAP DETAIL

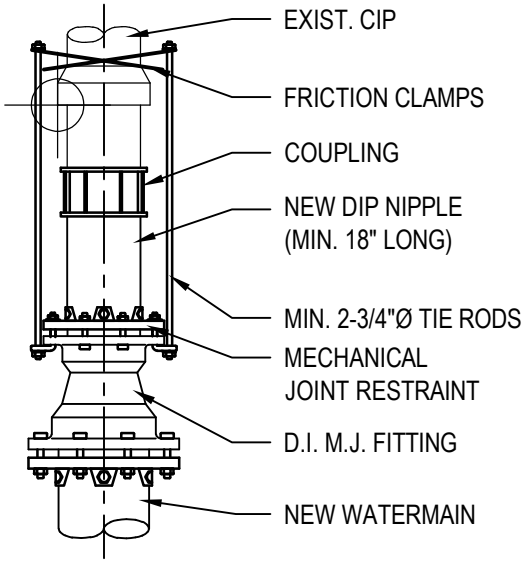

1. VALVES AND TEES MAY BE HARNESSED SIMILARLY.
2. HARNESSING IS FOR RESISTANCE TO INTERNAL PRESSURE-PIPE ITSELF MUST BE SUPPORTED ON FIRM BEDDING AND CAREFULLY BACKFILLED.
3. COAT ALL EXPOSED SURFACES OF HARNESS ASSEMBLY WITH BITUMINOUS COATING.
4. TIE RODS SHALL BE PLACED ON SIDES OF PIPE.

CONNECTION TO CIP

NTS

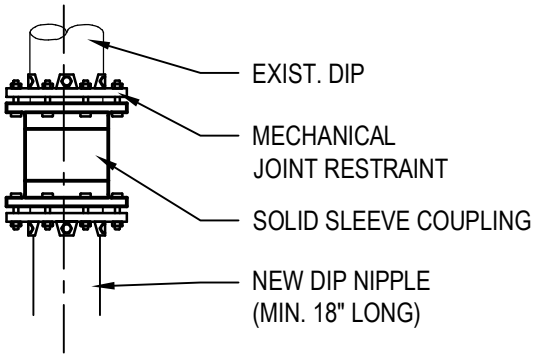

CONNECTION TO DIP

NTS

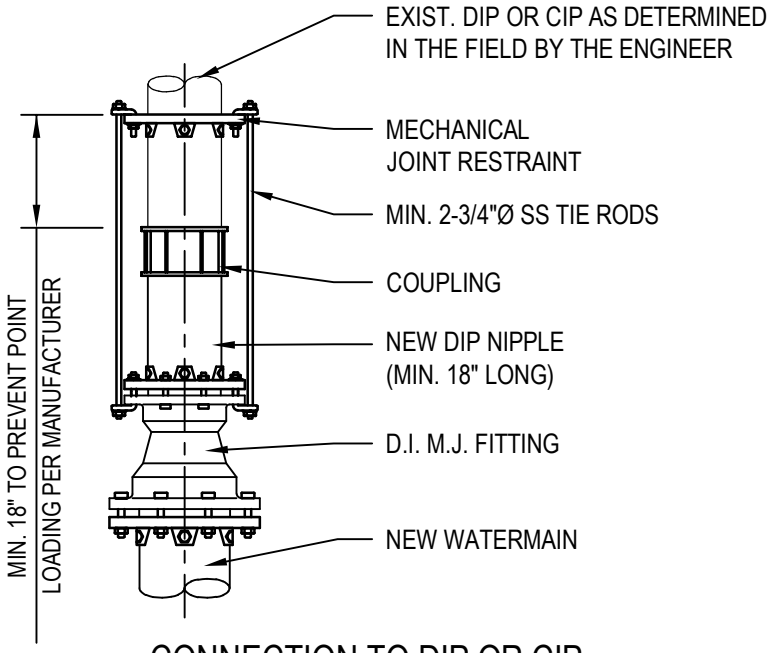

CONNECTION TO DIP OR CIP

NTS

CONNECTION TO EXISTING WATERMAIN THROUGH 12-INCH DIAMETER (TYP.)

NOT TO SCALE

IT IS VIOLATION OF NEW YORK STATE EDUCATION LAW FOR ANY PERSON, UNLESS ACTING UNDER THE DIRECTION OF A LICENSED PROFESSIONAL ENGINEER, TO ALTER AN ITEM ON THIS DRAWING IN ANYWAY. IF AN ITEM IS ALTERED, THE ALTERING ENGINEER SHALL AFFIX TO THE ITEM HIS/HER SEAL AND THE NOTATION "ALTERED BY" FOLLOWED BY HIS/HER SIGNATURE AND DATE OF SUCH ALTERATION AND A SPECIFIC DESCRIPTION OF THE ALTERATION.

CITY OF SYRACUSE
DEPARTMENT OF WATER

101 N. BEECH ST. SYRACUSE, NY 13210

CONNECTION TO EXISTING WATER MAIN DETAIL

SECTION 01200

SUBMITTALS

PART 1 GENERAL

1.01. SECTION INCLUDES

A. Submittal procedures.

B. Review of submittals.

C. Schedule of Submittals.

D. Shop Drawings.

E. Samples.

F. Manufacturer's instructions.

1.02. SUBMITTAL PROCEDURES

A. Transmit each required submittal using Owner furnished form.

B. Number the submittals as follows:

1. First: Specification section number.

2. Submittal number within the Specification section.

3. Review cycle number.

4. Title of submittal.

5. For example:

a. 02510-01-01 – Field lock gaskets for DIP (first review cycle)

b. 02510-01-02 - Field lock gaskets for DIP (second review cycle)

c. 02510-02-01 – Flange pipe and fittings (first review cycle)

d. 02510-02-02 – Flange pipe and fittings (second review cycle)

e. 02510-02-03 – Flange pipe and fittings (third review cycle)

C. Identify Project, Contractor, Subcontractor, and Supplier; pertinent Drawing number and detail number(s), and Specification sections, as appropriate.

D. Apply stamp, signed or initialed providing certification that includes, at a minimum:

1. Submittal Number _____
2. Deviations: None_____; As Listed _____

3. Reference Specification Section _____
4. Reference Drawing Number _____
5. Space Requirement: As Designed_____ Different, As Listed _____
6. Representation is made to Owner and Engineer that Contractor has satisfied the requirements of General Conditions Article 6.17.C.1.a through d, [associated Supplementary Conditions], and that the Contractor hereby approves this submittal.
   Contractor _____
   Signature _____
   Date _____
   Date _____

E. Schedule submittals to expedite the Project, and deliver to parties in the quantities and at the locations specified herein].

F. Identify any and all deviations from Contract Documents.

G. Identify product and/or system limitations which may be detrimental to successful performance of the completed Work.

H. Identify space requirements which differ from those designed and/or shown on the Contract Documents.

I. Provide space for Contractor and Owner review stamps.

J. Revise and resubmit: Identify all changes made since previous submittal in a cover letter or memorandum.

K. Distribute copies of reviewed submittals to concerned parties. Instruct parties to promptly report any inability to comply with provisions.

L. Submittals not required will not be recognized or processed.

M. Items shall not be fabricated or delivered without fully approved Shop Drawings.

N. Ensure no associated work begins until associated Shop Drawings are fully approved.

O. Fabrication prior to receiving an “Approved” or “Approved as Corrected – No Resubmittal Required” is at Contractor’s risk.

1.03. REVIEW OF SUBMITTALS

A. Review times:

1. No less than 15 days shall be allowed for Owner’s review of submittals and resubmittals unless otherwise specified in the Contract Documents.

B. Review Codes:

1. Approved

2. Approved as Corrected – No Resubmittal Required

3. Approved as Corrected – Resubmit Written Responses and Requested Information

4. Revise and Resubmit

5. Not Approved

6. Informational Purposes Only

C. Payment will not be made for any items requiring submittals until no further submittals are required for the item.

1.04. SCHEDULE OF SUBMITTALS

A. Submit a PDF copy of preliminary Schedule of Submittals.

B. Revise and resubmit until acceptable to Owner.

1.05. SHOP DRAWINGS

A. Provide information as required by individual Specification sections.

B. Shop Drawing submittals shall include all descriptive data, performance characteristics, material specifications, spare parts list, drawings, piping diagrams, wiring schematics, and shall be complete and accurate to indicate item-by-item compliance with the Contract Documents.

C. Shop Drawings shall be drawn at scales matching those on the Drawings depicting the same items.

D. All catalog cuts, manufacturer's specifications, drawings, and verbal descriptions shall be clearly marked to allow identification of the specific products used.

E. If the submittal deviates from the requirements of the Specifications in any way, it shall be clearly marked in the submittal with the justifying reason stated for evaluation by Engineer.

1.06. SAMPLES

A. Provide Samples of submitted materials as required by individual Specification sections.

B. Submit Samples to illustrate functional and aesthetic characteristics of the product, with integral parts and attachment devices. Coordinate Sample submittals for interfacing work.

C. Submit Samples of finishes from the full range of manufacturers' standard colors, textures, and patterns for Owner's selection.

D. Include identification on each Sample, with full Project information.

E. Submit the number or samples specified in individual Specification sections; one of which will be retained by Owner.

F. Reviewed samples which may be used in the Work are indicated in individual Specification sections.

1.07. MANUFACTURER'S INSTRUCTIONS

A. When specified in individual Specification sections, submit manufacturers' printed instructions for delivery, storage, assembly, installation, adjusting, and finishing, in quantities specified for Shop Drawings.

B. Identify conflicts between manufacturers' instructions and Contract Documents.

PART 2 PRODUCTS

Not used.

PART 3 EXECUTION

Not used.

END OF SECTION

SECTION 02260

PROTECTION OF EXISTING FACILITIES

PART 1 GENERAL

1.01. SECTION INCLUDES

A. Location of facilities.

B. Notification of owners and authorities.

C. Coordination and preparation.

D. Protection of facilities.

E. Relocation of facilities.

F. Protection of sewers and storm drains.

G. Protection of water mains near sewers.

H. Abandonment of utilities.

I. Restoration of property markers.

1.02. RELATED SECTIONS

A. Section 01200 - SUBMITTALS

B. Section 02220 - DEMOLITION

C. Section 02222 - PAVEMENT CUTTING AND REMOVAL

B. Section 02315 - EXCAVATION

C. Section 02317 - TRENCHING

PART 2 PRODUCTS

Not used.

PART 3 EXECUTION

3.01. LOCATION OF FACILITIES

A. Prior to construction, verify location of existing underground facilities near or adjacent to project.

1. Consult with appropriate Underground Facilities Protection Organization (Dig Safely New York) and owners of facilities and arrange for field stake-out or other markings to show locations.

2. Perform exploratory excavation at key junctures and other critical points to aid in ascertaining locations.

B. Report field stake-out findings and results of exploratory excavations to Owner if possible changes in project location or design are indicated because of suspected interferences with existing facilities. Allow Owner sufficient time to determine magnitude of changes and to formulate instructions in that regard.

C. If location of an existing underground facility is uncertain, apply careful excavation and probing techniques during construction to locate and avoid damage to same.

3.02. NOTIFICATIONS OF OWNERS AND AUTHORITIES

A. Prior to construction, notify owners of existing facilities, including local Police and Fire Departments, of general scope, nature and planned progress schedule of the work.

B. Notify owners of nearby underground facilities when excavating is to take place in a particular area, allowing them reasonable time to institute precautionary procedures or preventive measures which they deem necessary for protection of their facilities.

C. When existing utilities, such as sewer, water, gas, telephone or electric power are damaged or disturbed during construction, immediately notify affected owner and Project Owner.

D. Notify Police and Fire Departments, including affected owners, immediately if hazardous conditions are created or have the potential for occurring, as a result of damage to an existing facility or as a result of other activities at project site. Hazardous conditions could be created from: fire, explosion, escape of gas, escape of fuel oil, gasoline or industrial fluids, downed electrical wires, and disrupted underground electrical cables.

3.03. COORDINATION AND PREPARATION

A. Discuss anticipated work schedule with local authorities and owners of utilities at preconstruction meeting, including procedures to be followed if one or more utilities are damaged or disrupted. Develop contingency plans to address Contractor's role in repair of damaged utilities.

B. Make preparations beforehand to repair and restore damaged utilities, including arrangements for standby materials and equipment to be promptly assembled at site and utilized immediately.

C. Adjust work schedules and personnel assignments as necessary to conform to requirements of utility owner whose utility is to be temporarily interrupted during construction. Cooperate with utility owner in this regard to minimize the time of interruption.

D. Make preparations for and conform to applicable requirements of New York State Industrial Code Rule 53 (as amended April 1, 1975) entitled, "Construction, Excavation and Demolition Operations at or Near Underground Facilities," issued by State Department of Labor.

3.04. PROTECTION OF FACILITIES

A. Plan and conduct construction operations so that operation of existing facilities near or adjacent to the Work, including electric, telephone, sewer, water, gas or drainage utilities, are sustained insofar as the requirements of the project will permit.

B. Protect existing facilities from damage or movement through installation of adequate support systems and use of proper equipment, including application of careful excavation and backfilling techniques in sensitive areas.

C. Existing utilities and other facilities which are damaged by the Contractor's construction operations shall be promptly repaired by Contractor to the satisfaction of the affected owner or, if he so elects, that owner will perform the repairs with his own forces. Under either arrangement, such repair work shall be done at Contractor's expense.

D. When aboveground visible facilities such as poles, wires, cables, fences, signs or structures constitute an unavoidable interference, notify Owner and consult with affected owner regarding temporary removal and later restoration of the interfering item. Arrange with that owner to remove and later restore the interfering item to the satisfaction of the owner, subject to approval of the project Owner; or, allow affected owner to perform such work with his own forces. Under either arrangement, such work shall be done at Contractor's expense.

E. Take all necessary precautions to prevent fires at or adjacent to the work, buildings, and other facilities. No burning of trash or debris is permitted. If permanent fire extinguishers are used, they shall be recharged and in "new" condition when turned over to Owner.

3.05. RELOCATION OF FACILITIES

A. If the location or position of an existing gas or water pipe, public or private sewer or drain, conduit or structure be such as, in the opinion of Owner, to require its removal, realignment or change, such alteration shall be without cost to the Contractor for the work of removal, realignment, or change only.

B. Uncovering, supporting and sustaining such facility before its removal or before and after its realignment or change, shall be the Contractor's responsibility as part of the work of his Contract.

C. Contractor shall be entitled to extension of time for completion of entire work as the Owner determines that the entire work was delayed by the removal, realignment or change of such obstruction.

3.06. PROTECTION OF SEWERS AND STORM DRAINS

A. Where existing sanitary sewers or storm drain systems are being replaced or interrupted provide temporary bypass pumping or piping to maintain flow around that segment of the Work such that no back-ups occur in existing systems.

B. Existing sanitary sewer laterals damaged in the work or temporarily disconnected shall be restored to operation by the end of each work day. Existing sanitary sewer laterals crossing over new pipelines to be restored in accordance with details shown on the Drawings.

C. Maintain existing manholes, catch basins, and other utility structures in their pre-work condition. Any material or debris entering same due to the Contractor's operation shall be promptly removed.

3.07. PROTECTION OF WATER MAINS NEAR SEWERS

A. Where a minimum 10-foot horizontal separation or minimum 18-inch vertical separation (bottom of water pipe to top of sewer pipe) cannot be maintained between a water main and sewer line, one or more of the following remedies shall be incorporated in the work:

1. The sewer lines shall be encased in 4,000 psi mix concrete for a length of 10 feet on either side of the water main.

2. Both the water main and sewer line shall be constructed of pressure type joints of ductile iron pipe, and shall be pressure tested to 100 psi to assure water tightness.

3. One full length of water main shall be centered over the sewer line, so that both joints will be as far from the sewer as possible.

4. Relocate water main to obtain 18-inches minimum vertical separation.

3.08. ABANDONMENT OF UTILITIES

A. Remove existing utilities to be abandoned within limits of trench excavation, or impinging on trench limits.

B. Open ends of abandoned utilities, or those scheduled for abandonment, shall be bulkheaded by brick masonry or 4,000 psi mix concrete; or by cast iron plugs or caps in small diameter water mains.

C. Abandoned piping 36-inch diameter or larger shall be completely filled with sand or gravel or other approved material prior to bulkheading the open end(s) or removed.

D. Abandoned manholes and water valve casings shall be backfilled to grade with approved trench backfill material.

E. Frames, covers, grates, water valve casing, sections of water piping, hydrants (including standpipe and boot) valves and other items to be abandoned shall, if ordered by Owner, be salvaged for reuse and be delivered to Owner's property yard.

3.09. RESTORATION OF PROPERTY MARKERS

A. Property corner markers, boundary monuments, etc., disturbed or moved by the Contractor's operation shall be restored, in conformance with the property deed description, by a licensed land surveyor. Restoration of the property corner markers or boundary monuments shall be certified by said surveyor on a map prepared by him which shows the work accomplished. One copy of the map shall be given to the property owner and one copy given to the project Owner.

END OF SECTION

SECTION 02315

EXCAVATION

PART 1 GENERAL

1.01. SECTION INCLUDES

A. Excavation for paving, landscaping, and structures.

1.02. RELATED SECTIONS

A. Section 01400 - QUALITY CONTROL: Inspection of bearing surfaces.

B. Section 01500 - TEMPORARY FACILITIES: Barriers, water controls, erosion and sediment controls.

C. Section 02240 – REMOVAL OF WATER

D. Section 02250 – SHEETING AND BRACING

E. Section 02260 - PROTECTION OF EXISTING FACILITIES

F. Section 02316 – COMPACTION

G. Section 02317 - TRENCHING: Excavation and backfilling for underground utilities and utility structures.

H. Section 02318 - ROCK REMOVAL

I. Section 02320 - BACKFILLING

1.03. FIELD MEASUREMENTS

A. Verify that survey benchmark and intended elevations for the work are as indicated.

PART 2 PRODUCTS

Not used.

PART 3 EXECUTION

3.01. PREPARATION

A. Identify required lines, levels, contours, and datum. Review subsurface report and other available site information.

B. Identify known underground, aboveground, and aerial utilities. Stake and flag locations.

C. Notify utility company to remove and relocate utilities.

D. Protect above- and below-grade utilities which are to remain.

E. Protect plant life, lawns, rock outcropping and other features remaining as a portion of final landscaping.

F. Protect benchmarks, existing structures, fences, sidewalks, paving, and curbs from excavation equipment and vehicular traffic.

G. Excavations shall be in complete accordance with all details of applicable codes, rules, and regulations including all local, state, and federal regulations including the Occupational Safety and Health Administration (OSHA) Title 29 Code of Federal Regulations Part 1926, Subpart P - Excavations and Trenching Standards. Contractor shall designate a “Competent Person” 29 CFR 1926.32(f) who shall be responsible for inspections of excavations on a daily basis and document and maintain daily trenching and excavation logs per OSHA 29 CFR 1926.

3.02. CLASSIFICATION OF EXCAVATED MATERIAL

A. Classifications of excavated materials are as follows:

1. Unclassified Excavation - “Unclassified excavation” shall include all material excavated within the authorized lines and grades prescribed in the Drawings. Unclassified excavation shall include “rock excavation” as well as “common excavation” as defined herein.

2. Common Excavation - “Common excavation” shall include all excavation except “rock excavation.” All unconsolidated and non-indurated material, rippable rock, loose rock, soft mineral matter, weathered rock or saprolite, and soft or friable shale which is removable with normal earth excavation equipment shall be considered “common excavation.” All boulders and detached pieces of solid rock or concrete or masonry less than 1 cubic yard in volume shall be classified as “common excavation.”

3. Rock Excavation - “Rock excavation” shall include all sound solid masses, layers and ledges of consolidated and indurated rock or mineral matter of such hardness, durability and/or texture that it is not rippable or cannot be excavated with normal earth excavation equipment. Should a conflict arise as to the classification of excavation as either “common” or “rock,” the following test shall be used in the appropriate determination:

a. Where practicable, a late model tractor mounted hydraulic ripper equipped with a one digging point of standard manufacturer’s design adequately sized for use with and propelled by a crawler-type tractor rated between 210 and 240 net fly-wheel horsepower, operating in low gear, shall be utilized. Should the suspect material not be effectively loosened or broken down by ripping in a single pass with the aforementioned ripper, the material shall be classified as “rock.”

b. In situations where interbedded strata of “common excavation” material and “rock excavation” material are encountered in the same excavation, the individual classification of those materials shall be made on an average percentage basis of the occurrence of those materials as measured in stratigraphic sections and as approved by the Engineer.

c. When rock is encountered in excavations, it shall be removed by jackhammering or any other method suitable and safe considering the proximity of existing utilities or facilities.

B. For this project, all excavated material shall be classified as common excavation.

3.03. EXCAVATING

A. Underpin adjacent structures which may be damaged by excavation work, including utilities and pipe chases.

B. Excavate subsoil required to accommodate building foundations, paving, site structures, and construction operations.

C. Machine-slope banks to angle which is safe for specific material in which excavation is made.

D. Excavation cut not to interfere with normal 45-degree bearing splay of foundation. Undercutting of excavation faces will not be permitted.

E. Grade top perimeter of excavation to prevent surface water from draining into excavation.

F. Hand trim excavation to required undisturbed subgrade. Remove loose matter.

G. Remove lumped subsoil, boulders, and rock under 1 cubic yard, measured by volume. Refill voids with Mix “C” concrete or compacted gravel/crushed stone.

H. Notify Engineer of unexpected subsurface conditions, or of questionable soils encountered at required subgrade elevations, and discontinue work in area until notified to resume operations.

I. Should the Contractor, through negligence or otherwise carry his excavation below the designated subgrade, Mix ”C” concrete or such other materials as may be approved by the Engineer, shall be furnished and placed as backfill in sufficient quantities to reestablish the designated subgrade surface. Granular material used for backfilling shall be spread and compacted in conformance with the requirements of Section 02320, Backfilling, and to the percentage compaction outlined therein. The cost of this refilling operation, including any tests associated therewith, shall be borne by Contractor.

J. Remove surplus excavated material from site.

3.04. DISPOSAL OF MATERIAL

A. All excavated material except reusable topsoil or reusable fill shall be classified as surplus material and disposed of off-site unless Owner designates an on-site location.

B. On-site disposal of surplus material will not be allowed. Reuse of excavated material as on-site fill shall conform with Section 02320, Backfilling.

C. Make all arrangements for disposal sites, unless the Owner designates special locations. All expenses for disposal shall be borne by the Contractor. Bidders shall carefully investigate all aspects of surplus material disposing operations.

D. Prior to depositing surplus material at any off-site location, obtain a written agreement between Contractor and the owner of the property on which the disposal of the material is proposed. The agreement shall state that the owner of the property gives permission for the

Contractor to enter and deposit material of a particular classification on the owner's property at no expense to the project Owner, and shall include any other conditions pertinent to the situation as agreed upon by each party. A copy of said agreement shall be furnished to the Owner.

3.05. FIELD QUALITY CONTROL

A. Field inspection will be performed under provisions of Section 01400, Quality Control.

B. Provide for visual inspection of bearing surfaces.

3.06. PROTECTION

A. Protect excavations by methods required to prevent cave-in or loose soil from falling into excavation.

B. Protect bottom of excavations and soil adjacent to and beneath foundation, from freezing.

C. Exposed subgrade surfaces shall remain undisturbed, drained, and maintained as uniform, plane areas, shaped to receive the foundation components of the building or structure.

END OF SECTION

SECTION 02316

COMPACTION

PART 1 GENERAL

1.01. SECTION INCLUDES

A. Compaction requirements and test methods.

B. Compact all subgrades, foundations, embankments, trench backfills, filled and backfilled material as specified.

1.02. RELATED SECTIONS

A. Section 01050 – PAYMENT ITEM DESCRIPTIONS

B. Section 01400 – QUALITY CONTROL: Inspection and testing by laboratory services.

C. Section 02315 - EXCAVATION

D. Section 02317 - TRENCHING

E. Section 02320 – BACKFILLING

1.03. REFERENCES

A. ASTM D698 - Laboratory Compaction of Soil Using Standard Effort

B. ASTM D1556 - Density of Soil in Place by the Sand-Cone Method

C. ASTM D1557 - Laboratory Compaction of Soil Using Modified Effort

D. ASTM D2922 - Density of Soil in Place by Nuclear Methods

E. ASTM D3017 - Water Content of Soil in Place by Nuclear Methods

1.04. SUBMITTAL

A. Submit in writing a description of the equipment and methods proposed to be used for compaction.

1.05. QUALITY ASSURANCE

A. The Contractor shall adopt compaction methods which will produce the degree of compaction specified herein, prevent subsequent settlement, and provide adequate support for the surface treatment, pavement, structure and piping to be placed thereon, or therein, without damage to the new or existing facilities.

B. The natural subgrade for all footing, mats, slabs-on-grade for structures or pipes shall consist of firm undisturbed natural soil, at the grades shown on the Drawings.

C. After excavation to subgrade is completed, the subgrade shall be compacted if it consists of loose granular soil or if its surface is disturbed by the teeth of excavating equipment.

1. This compaction shall be limited to that required to compact loose surface material and shall be terminated in the event that it causes disturbance to underlying fine-grained soils, as revealed by weaving or deflection of the subgrade under the compaction equipment.

2. If the subgrade soils consist of saturated fine or silty sands, silts, or clay or varved clays, no compaction shall be applied.

PART 2 PRODUCTS

2.01. MATERIALS

A. Materials to be compacted shall be as specified in Section 02315, Section 02317, and Section 02320.

PART 3 EXECUTION

3.01. EXAMINATION

A. Examine spaces to be filled beforehand and remove all unsuitable materials and debris including sheeting, forms, trash, stumps, plant life, etc.

B. Inspect backfill and fill materials beforehand and remove all roots, vegetation, organic matter, or other foreign debris. Stones larger than 12 inches in any dimension shall also be removed or broken into smaller pieces.

C. No backfill or fill material shall be placed on frozen ground nor shall the material itself be frozen or contain frozen soil fragments.

D. Spaces to be filled shall be free from standing water so that placement and compaction of the fill materials can be accomplished in “dry” conditions.

3.02. PREPARATION

A. Brace walls and slabs of structures to support surcharge loads and construction loads imposed by compaction operations.

B. Each layer of fill shall be compacted to the specified density the same day it is placed.

1. The moisture content of backfill or fill material shall be adjusted, if necessary to achieve the required degree of compaction.

C. Compact each lift in accordance with Table 1.

D. Match compaction equipment and methods to the material and location being compacted in order to obtain specified compaction, with consideration of the following guidelines:

1. Rubber-tired rollers are preferred for most areas to prevent bridging of softer materials.

2. Double smooth drum rollers may be used provided that careful inspection can prevent bridging.

3. Compaction roller should be lighter in weight than proof-rolling equipment, with a minimum compaction force of 350 lbs per linear inch (PLI).

4. Vibratory compaction is preferred for dry, granular materials.

5. Hand compaction equipment such as impact rammers, plate or small drum vibrators, or pneumatic buttonhead compactors should be used in confined areas.

6. Hydraulic compaction by ponding or jetting will not be permitted except in unusual conditions, and then only upon written approval by the Owner and after a demonstration of effectiveness.

7. Backhoe-mounted hydraulic or vibratory tampers are preferred for compaction of backfill in trenches under pavements over 4 feet in depth. The upper 4 feet shall be compacted as detailed above or with hand-guided or self-propelled vibratory compactors or static roller.

8. For plastic pipelines (PVC, PE or PB) do not compact directly over center of pipe until backfill has reached 2 feet above top of pipe.

TABLE 1

COMPACTION REQUIREMENTS

CONSTRUCTION ELEMENT	MAXIMUM COMPACTION LAYER THICKNESS (INCHES)	ASTM	MINIMUM COMPACTION
I. STRUCTURES*			
a. Fill beneath foundation elements and under slabs-on-grade - hand-guided compaction	6	D1557	95%
Fill beneath foundation elements and under slabs-on-grade - self-propelled or tractor-drawn compaction	8	D1557	95%
b. Fill around structures and above footings	8	D1557	95%
II. TRENCHES**			
a. Fill under pipelines and pipe bedding	8	D1557	95%
b. Pipe sidefills and top 4 feet of pipe backfill under pavements	12	D1557	93%
c. Backfill below 4 feet under pavement	18	D1557	90%
d. Backfill under lawns, gardens and cultivated fields	24	D1557	90%
e. All other trenches***	36	D698	85%
III. EMBANKMENTS AND FILLS			
a. Fill under streets, parking lots, and other paved areas	12	D1557	92%
b. Embankments not supporting pavement or structures	18	D1557	90%
c. Rough site grading	24	D698	85%

* Where structural loads are carried by piles, caissons or other deep foundations, minimum compaction may be reduced to 92 percent.

** The first 1 foot above pipelines shall have a compacted thickness of 12 inches.
*** For cross-country pipelines, lifts may be compacted with a backhoe bucket or other means, and slightly mounded at the surface provided that regrading is performed within the guarantee period.

3.03. FIELD QUALITY CONTROL

A. Material Testing

1. The Owner reserves the right to order testing of materials at any time during the work.

2. Testing will be done by a qualified, independent testing laboratory in accordance with this section and Section 01400, Quality Control.

3. The Contractor shall aid the Owner in obtaining representative material samples to be used in testing.

4. For each material which does not meet specifications, the Contractor shall reimburse the Owner for the cost of the test and shall supply an equal quantity of acceptable material, at no additional compensation.

5. The Contractor shall anticipate these tests and incorporate the time and effort into procedure.

B. Compaction Testing

1. The Owner reserves the right to order the qualified independent testing laboratory to conduct in-place density tests of compacted lifts.

2. Testing shall be conducted for every 200 cubic yards of fill or backfill, or every 100 linear feet of trench backfill placed.

3. The Contractor shall dig test holes and provide access to all backfill areas at no additional compensation when requested by the Owner.

4. For each test which does not meet specifications, the Contractor shall retest at his cost. If the retest does not meet specifications, the Contractor shall replace and recompact material to the specifications at no additional cost to the Owner.

5. The Contractor shall anticipate these tests and incorporate the time and effort into procedures.

6. Nuclear moisture density testing by “probe” methods will be acceptable for compacted layers not exceeding 8 inches in thickness.

a. Nuclear “backscatter” methods will be acceptable only for testing asphalt paving layers not in excess of 3 inches in thickness.

b. Only certified personnel will conduct nuclear testing.

c. If the nuclear method is utilized, the results shall be checked by at least one in-place density test method described above.

C. Unacceptable Stockpiled Material - Stockpiled material may be tested according to material testing materials.

D. Alternate Methods of Compaction - The Contractor may employ alternate methods of compaction if the desired degree of compaction can be successfully demonstrated to the Owner's satisfaction.

E. Select Material - On-Site

1. Any on-site material may be used for select fill material provided it meets all the requirements of the equivalent off-site material.

2. No on-site material shall be used without prior approval of the Owner.

F. Systematic Compaction - Compaction shall be done systematically, and no consideration shall be given to incidental coverage due to construction vehicle traffic.

3.04. PROTECTION

A. Prior to terminating work for the day, the final layer of compacted fill, after compaction, shall be rolled with a smooth-wheel roller if necessary to eliminate ridges of soil left by tractors or equipment used for compaction or installing the material.

B. As backfill progresses, the surface shall be graded so as to drain off during incidence of rain such that no ponding of water shall occur on the surface of the fill.

C. The Contractor shall not place a layer of fill on snow, ice or soil that was permitted to freeze prior to compaction.

1. These unsatisfactory materials shall be removed prior to fill placement.

END OF SECTION

SECTION 02317
TRENCHING

PART 1 GENERAL

1.01. SECTION INCLUDES

A. Excavating trenches for utilities.

B. Pipe foundations and bedding.

C. Backfilling and compacting.

D. Materials.

1.02. REFERENCES AND STANDARDS

A. Standard Material Specifications for gravel, sand, crushed stone and gravel-cement mixtures published by the Department of Transportation (DOT) of the State in which project is located

B. ASTM C136: Sieve Analysis of Fine and Course Aggregates

C. ASTM D1556: Density of Soil in Place by Sand-Cone Method

D. ASTM D1557: Laboratory Compaction of Soil Using Modified Effort

E. ASTM D2922: Density of Soil in Place by Nuclear Methods

F. ASTM D3017: Water Content of Soil in Place by Nuclear Methods

G. OSHA: Occupational Safety and Health Administration

1.03. RELATED SECTIONS

A. Section 01300 – CONSTRUCTION DOCUMENTATION

B. Section 01400 – QUALITY CONTROL

C. Section 01500 – TEMPORARY FACILITIES

D. Section 01600 – RECORD DOCUMENTS

E. Section 02220 - DEMOLITION

F. Section 02222 – PAVEMENT CUTTING AND REMOVAL

G. Section 02240 – REMOVAL OF WATER

H. Section 02250 – SHEETING AND BRACING

I. Section 02260 – PROTECTION OF EXISTING FACILITIES

J. Section 02316 - COMPACTION

K. Section 02318 – ROCK REMOVAL

L. Section 02510 – WATER DISTRIBUTION PIPING AND APPURTENANCES

M. Section 02535 – SANITARY SEWAGE PIPING AND ACCESSORIES

N. Section 03001 – CONCRETE

1.04. SUBMITTALS

A. Submit under provisions of Section 01200.

B. Granular Materials

1. Granular materials required for filling, backfilling, bedding, subbase and other purposes shall be as shown on the Drawings or ordered by Owner. Prior to bidding, prospective contractors shall familiarize themselves with the available quantities of approved on-site and off-site materials.

2. For each on-site or off-site material proposed, furnish to Owner for approval a certified gradation analysis at least ten (10) days prior to date of anticipated use of such material. Except as specified herein, only off-site approved materials shall be utilized.

3. The Owner reserves the right to inspect proposed sources of off-site granular material and to order such tests of the materials as he deems necessary to ascertain its quality and graduation of particle size. The Contractor shall, at his own expense, engage an approved testing laboratory to perform such test, and submit certified test results to the Owner. If similar tests of the material from a particular source were performed previously, submit results of these tests to the Owner for consideration.

4. No granular materials shall be used on this project for fill, backfill, bedding, subbase, or other purpose until approval is obtained from the Owner, and only material from approved sources shall be used.

C. Geotextile Fabric

1. Submit a 1 square foot sample of each geotextile to be used.

2. Submit manufacturer's specifications of average roll characteristics for standards ASTM geotextile tests for each geotextile to be used.

PART 2 PRODUCTS

2.01. ON-SITE MATERIALS

A. Type A, Excavated Material - Material under this classification shall be derived solely from excavations necessary to construct the project to the lines and grades specified. If the excavated material on-site is approved for reuse and is suitable, it shall be used for filling or backfilling purposes. If he so elects, the Contractor may, at his own expense, substitute other types of material in place of Type A Material, provided such substitution is approved in advance by the Owner. All replaced or surplus material shall be disposed of as outlined in Section 02220.

1. Unclassified Excavated Material

a. Type A-1 - Referred to as "excavated material" and from which all frozen material, boulders, trash and foreign debris greater than 6 inches in any dimension has been removed. Approved Type A-1 material shall be used for all backfilling except under structures.

b. Type A-2 - Referred to as "select excavated material" and from which all frozen material, humus, peat, roots, vegetation, ashes, trash, debris, and rocks or stones greater than 2 inches in any dimension have been removed.

2. Classified Excavated Material - Where the Contract Documents allow the reuse of excavated on-site materials as a substitute for off-site sources of Type "B" gravel or Type "C" sands, the minimum requirements for each of those excavated materials shall be the same as required for the equivalent off-site material. If such materials are used, submit for approval in writing the proposed methods of excavation, location of stockpiles, quantities of required sand and gravels, estimated excavation quantities and proposed excavation limits within the accepted excavation area. Provide a demonstration at least 10 days prior to commencement of excavation that the methods will provide consistent quantity and quality of material as specified for Type "B" gravels and Type "C" sands. The Owner will require subsurface investigations, sampling, and testing to confirm the

extent and quality of the proposed material. Cost of all investigations, sampling, and testing shall be the Contractor's responsibility.

B. Type E - Borrow Material

1. "Borrow material" is defined as approved on-site material required for fill or backfill in excess of the quantity of available approved material designated as Type "A" material.

2. No such borrow material shall be used on this project unless specified in the Contract Documents and except within the limits of borrow areas designated on the Drawings.

3. Approval of all borrow material must be obtained from the Owner, and only material from approved sources shall be used.

4. Use of designated borrow areas shall be subject to the approval of the Owner at all times. Test pits and analyses of borrow material shall be provided as required by the Owner for each borrow area and at the expense of the Contractor. In addition, the Owner may require full excavation and restoration plans for each borrow area. All borrow areas shall be stripped of topsoil and organic materials far enough in advance of operations that contamination of borrow material is prevented.

a. Unclassified Borrow Material

i. This material consists of a naturally occurring mixture of sand, silts, clay, gravel, deteriorated rock or other inorganic particles.

ii. Type E-1 - Referred to as "common borrow material", from which all frozen material, boulders, trash or debris have been removed.

iii. Type E-2 - Referred to as "select borrow material" and from which all frozen material, humus, peat, roots, vegetation, ashes, trash, debris, and rocks or stones greater than 6 inches in any dimension have been removed.

b. Classified Borrow Material - Where the Contract Documents allow the use of on-site borrow areas as a substitute for off-site sources of Type "B" gravels and Type "C" sands, the requirements for each of those on-site materials shall be the same as off-site sources. In addition, all of the requirements for "classified excavated material" (Type "E" material) must be met at least 10 days prior to the acceptance of approved borrow areas for use as a source of Type "B" gravel or Type "C" sand.

2.02. OFF-SITE MATERIAL

Within the following specifications where grain size distribution requires a maximum of 10 percent or less material capable of passing the #200 mesh sieve, the percentage of material finer (than the #200 sieve) by weight shall be determined by wet screening in accordance with ASTM Standard D-1140. It is the intent of the specifications to allow the use of granular materials from local suppliers. Material Specifications shall conform to the requirements of the New York State Department of Transportation, (NYSDOT) and shall conform to the latest NYSDOT Standard Specification.

No gravel, sand, crushed stone or run-of-crusher material shall be used for this project until acceptance is obtained from the Owner, and only material from approved sources shall be used. A certified sieve analysis from the supplier shall be submitted for the Owner's acceptance prior to the use of any materials specified in this section.

A. Bedding and Pipe Encasement

1. NYSDOT No. 1 Crushed Stone or Crushed Gravel – bedding for DIP, water main. Thoroughly washed, clean, sound, tough, hard, crushed limestone conforming to the requirements of NYSDOT Item No. 703.0201 or crushed gravel conforming to the requirements of NYSDOT Item No. 703.0202, having the following gradation by weight:

% Passing	Sieve
100	1-inch
90-100	1/2-inch
0-15	1/4-inch

2. NYSDOT No. 2A Crushed Stone or Crushed Gravel – bedding for DIP water main. Shall be a No. 1 and No. 2 blend, thoroughly washed, clean, sound, tough, hard, crushed limestone conforming to the requirements of NYSDOT Item No. 703.0201 or crushed gravel conforming to the requirements of NYSDOT Item No. 703.0202, having the following gradation by weight:

% Passing	Sieve
100	1-1/2-inch
93-100	1-inch
27-58	1/2-inch
0-8	1/4-inch

3. NYSDOT Concrete Sand – bedding for copper tubing. Washed, fine aggregate sand shall conform to the requirements of NYSDOT Item No. 703.07, having the following gradation by weight:

% Passing	Sieve
100	3/8-inch
90 - 100	No. 4
75 - 100	No. 8
50 - 85	No. 16
25 - 60	No. 30
10 - 30	No. 50
1 - 10	No. 100
0 - 3	No. 200

B. Select Backfill - NYSDOT Subbase Type 2 Crusher Run Stone or Crusher Run Gravel. Material shall conform to the requirements of NYSDOT Item No. 304.12, having the following gradation by weight:

% Passing	Sieve
100	2-inch
25 - 60	1/4-inch
5 - 40	No. 40
0 - 10	No. 200

C. Recycled concrete or asphalt pavement shall not be allowed.

D. Slag of any type shall not be allowed.

PART 3 EXECUTION

3.01. EXAMINATION

A. Submit for approval fill materials to be reused.

3.02. PREPARATION

A. Identify required lines, levels, contours, and datum.

B. Prior to start of construction, notify all impacted organizations, and have staked or marked all underground utilities. Utilities include water, gas, electrical, telephone, cable, storm sewer, sanitary sewers, laterals, and services. In the event such locations indicate a possible interference, or when needed to locate points of connection to existing facilities, perform exploratory excavations to determine the utilities' location and elevation. Provide the Owner with the results of the exploratory excavations for his review. Allow the Owner sufficient time to determine any changes required as a result of such exploratory excavations prior to start of construction.

C. When the project consists of reconstructing sanitary sewers and reconnection of existing sanitary laterals, only reconnect live laterals, unless otherwise shown on the Drawings. Verify whether the lateral is alive or abandoned and the source of the lateral using such methods as necessary including dyeing, flushing with water, roding, pipe locators, and exploratory excavations.

D. Abandoned pipes and laterals shall be plugged in with 12 inches of concrete or grout or for large pipes with solid brick masonry.

E. Conduct the operations such that no interruptions to the existing utility system shall occur. Where existing sanitary sewers or storm drain systems are being replaced or interrupted, provide temporary bypass pumping or temporary piping to maintain flow around the work site such that no backups occur in these sewer systems.

F. Existing sanitary sewer laterals damaged in the work or temporarily disconnected shall be restored to operation by the end of each work day. Existing sanitary sewer laterals where crossing over new pipelines to be restored in accordance with details shown on the drawings.

G. Maintain existing manholes, catch basins, and other utility structures above and below grade which are to remain in their pre-work condition. Any material or debris entering same due to the operation shall be promptly removed.

H. Protect plant life, lawns, rock outcropping and other features remaining as a portion of final landscaping.

I. Protect control points, bench marks, existing structures, fences, sidewalks, paving, and curbs from excavation equipment and vehicular traffic. Preserve the control points provided by the Owner throughout the life of the project, and accurately replace any such point, which is damaged or moved, at Contractor's expense.

J. Cut out soft areas of subgrade not capable of insitu compaction. Backfill with Type III pipe foundation and compact to density equal to or greater than requirements for subsequent backfill material.

K. Brace walls and slabs of structures to support surcharge loads and construction loads imposed by backfilling operations.

L. Maintain a stable, dry backfill area in accordance with Section 02320.

M. Remove all water, snow, ice and debris from surfaces to accept fill materials and from the backfill material. No calcium chloride or other chemicals shall be used to prevent freezing.

N. Areas to receive compacted fill shall be graded to prevent surface runoff and ponding in accordance with Section 02370.

O. No fill or backfill material may be used without approval of the Owner.

P. No geotextile fabric may be used without approval of the Owner.

Q. Backfill operations shall be started at the lowest elevation in the area to be backfilled, and continue, in horizontal layers, upward to the limits specified.

R. Backfill material shall be within 2 percent of the optimum moisture content for that material.

S. Any crushed gravel stockpiles which have undergone excessive particle segregation shall be reviewed and approved by the Owner prior to placement.

3.03. TRENCH EXCAVATION

A. Trenches for underground piping, ductwork, drains, and similar utilities shall be excavated and maintained as shown on the Drawings and specified in this Section. Trench widths shall be held within the minimum and maximum limits shown on the Drawings. If a prefabricated, mobile shield is utilized in lieu of conventional sheeting and bracing in pipe trenches, the bottom of the shield shall be maintained as high as possible (preferably above the spring line of the pipe) so as to prevent disturbance of the pipe foundation material and to avoid forces which would tend to pull pipe joints apart when the shield is dragged forward. Gouged openings or troughs left by the shield shall be filled with additional pipe foundation material and thoroughly compacted. Installation of sheeting and bracing and use of mobile shields shall be in complete accordance with all details of applicable safety codes, rules and regulations including all applicable local, State, Federal, and OSHA regulations.

B. Excavation shall be such that a flat bottom trench of allowable width is established at the required subgrade elevation for subsequent installation of pipe foundation material.

C. If indicated on the Drawings or when required as a result of unsuitable soil conditions, trench excavation shall be carried below the required subgrade and a special pipe foundation installed in conformance with the Contract Documents. In any event, operations shall result in stable trench walls and a stable base free from standing water, consistent with trench width requirements.

D. Bedrock, boulders and cobbles greater than 6 inches shall be trimmed back or removed on each side of the trench so that no rock protrudes within 6 inches of the installed pipe. Rock shall also be trimmed back across the bottom of the trench so that no rock, boulder or cobble protrudes within 4 inches of the installed pipe.

E. In general, trenches shall not be opened for more than 50 feet in advance of installed pipe. Excavation of the trench shall be fully completed at least 5 feet in advance of pipe laying operations. No more than 40 feet of trench shall be left open overnight.

3.04. EXCAVATION CLASSIFICATION

All material excavated will be measured and classified as provided herein.

Unclassified Excavation - “Unclassified excavation” shall include all materials excavated within the authorized lines and grades prescribed in the Drawings. Unclassified excavation shall include “rock excavation” as well as “common excavation” as defined herein. Unless specifically designated otherwise in the appropriate bid items of the Bid Proposal, all excavation shall be considered to be “unclassified excavation.”

Common Excavation - “Common excavation” shall include all excavation except “rock excavation.” All unconsolidated and non-indurated material, rippable rock, loose rock, soft mineral matter, weathered rock or saprolite, and soft or friable shale which is removable with normal earth excavation equipment shall be considered “common excavation.” All boulders and detached pieces of solid rock or concrete or masonry less than 1 cubic yard in volume shall be classified as “common excavation.”

Rock Excavation - “Rock excavation” shall include all sound solid masses, layers and ledges of consolidated and indurated rock or mineral matter of such hardness, durability and/or texture that it is not rippable or cannot be excavated with normal earth excavation equipment. Should a conflict arise as to the classification of excavation as either “common” or “rock,” the following tests shall be used in the appropriate determination:

Where practicable, a late model tractor mounted hydraulic ripper equipped with a one digging point of standard manufacturer’s design adequately sized for use with and propelled by a crawler-type tractor rated between 210 and 240 net fly-wheel horsepower, operating in low gear, shall be utilized. Should the suspect material not be effectively loosened or broken down by ripping in a single pass with the aforementioned ripper, the material shall be classified as “rock.”

In situations where inter-bedded strata of “common excavation” material and “rock excavation” material are encountered in the same excavation, the individual classification of those materials shall be made on an average percentage basis of the occurrence of those materials as measured in stratigraphic sections and as approved by the Owner.

When rock is encountered in excavations, it shall be removed by jack hammering or any other method suitable and safe considering the proximity of existing utilities or facilities.

Extra compensation for excavation of rock by special means will be allowed only if specifically authorized in appropriate bid items of the Bid Proposal.

3.05. UNAUTHORIZED EXCAVATION

The Contractor shall not be entitled to additional compensation for unauthorized excavations carried beyond or below the lines and subgrades prescribed in the Contract Documents. The Contractor shall refill such unauthorized excavations at his own expense, and in conformance with the following provisions of this Article.

Should the Contractor, through negligence or for reasons of his own, carry his excavation below the designated subgrade, fill concrete or such other material as may be approved by the Owner, as specified in PART 2, shall be furnished and placed as backfill in sufficient quantities to reestablish the designated subgrade surface. Granular material used for backfilling shall be spread and compacted in conformance with the requirements of later Articles of the section, and to the percentage compaction outline therein. The cost of any tests associated with this refilling operation shall be borne by the Contractor.

If the maximum widths of pipe trenches are exceeded, the installed pipes shall be fully cradled in a minimum of 6 inches of fill concrete, as specified elsewhere, and at the Contractor’s expense. Excavation below subgrade which is ordered by the Owner because the normal subgrade has been disturbed by the Contractor’s operations shall be considered as unauthorized excavation.

3.06. MAINTENANCE OF EXCAVATIONS

All excavations shall be properly and legally maintained while they are open and exposed. Sufficient and suitable barricades, warning lights, flood lights, signs, etc., to protect life and property shall be installed and maintained at all times until the excavation has been backfilled and graded to a safe and satisfactory condition. All signs, markers, barricades shall conform to the requirements of the manual of Uniform Traffic Control Devices. All barricades, signs and markers shall be reflectorized.

To maintain traffic and safety temporary plating over trenches consisting of steel plates shall be used to temporarily bridge trench excavations. Plates shall be of size and positioned to provide adequate bearing at plate edges, shall be securely anchored, and shall be fitted in place in a manner to minimize noise when crossed by traffic. Plates shall be of sufficient thickness to safely carry heavy traffic without detrimental deflection; however, unless otherwise specified, the minimum thickness of plates shall be 1-inch.

Plate edges exposed to traffic shall be feathered with asphalt mix as part of trench excavation work. Work includes surveillance and adjustment of plating over trenches which shall be provided by the Contractor during non-working hours, weekends, and holidays.

3.07. PIPE FOUNDATIONS

A. All pipes, fittings or specials which are to be installed in the open trench excavation shall be properly bedded in, and uniformly supported on pipe foundations of the various types specified herein and shown on the Drawings. Flat-bottom trenches of required width shall be excavated to the necessary depth as required in the Table of Quantity Factors shown on the Drawings and maintained in accordance with this section prior to installing the foundation. Trenches shall be dewatered and all work performed in a dry trench.

B. Bedding material shall be spread in maximum of 8-inch layers to the midpoint of the pipe and each layer shall be compacted until the required total depth of the bedding has been built up. Compaction methods include hand tamping with T-bars, flat heads, shovel slicing, as well as mechanical compactors. The Contractor shall perform his bedding operations with care to maintain line and grade.

C. The pipe foundation above the midpoint of the pipe shall be spread and compacted in 12-inch layers to 12 inches above the top of the pipe. When PVC, plastic or polyethylene pipe is used, do not compact directly over pipe until the depth of backfill has reached 2 feet above the top of the pipe.

D. Type I - Normal Soil Conditions - Unless shown otherwise in the Drawings, all pipe shall be supported on Type I foundation. The trench shall be excavated from four to eight inches deeper than the bottom of the pipe, depending on the diameter of the pipe (see Table of Quantity Factors shown on the Drawings). Run-of-crusher stone standard bedding, Type “D-R-1" material as described above shall be furnished, placed and compacted in the trench for its full width such that, after the pipe has been uniformly bedded in this material, the required minimum depth of Type ”D-R-1" material remains between pipe and undisturbed trench bottom, as noted in the “Table of Quantity Factors.” Suitable holes shall be provided in the trench bottom to permit adequate bedding of bells, couplings, or similar projections. The run-of-crusher stone shall extend upward to a point 12 inches over the top of the pipe. Minimum width of pipe foundation shall be outside diameter of pipe plus 2'-0".

E. Type II - Moderately Unstable Soil Conditions - When specifically called for on the Drawings, or when ordered by the Owner, the pipe shall be supported on Type II foundation. The foundation shall be installed where a suitable supporting soil or rock stratum occurs within two feet, more or less of the bottom of the pipe. The trench shall be excavated to the depth necessary to reach the suitable supporting stratum. Type “D-R-1" material or Type “D-2" crushed stone, as ordered by the Owner as described above, shall then be furnished and placed in the trench for its full width. The material shall be spread in 12-inch layers, and each layer shall be compacted. The pipe foundation material to be supported on Type VII foundation, geotextile fabric foundation. The crushed stone or gravel depth shall extend from the supporting stratum up to an elevation 4, 6 or 8 inches below the bottom of the pipe depending upon the pipe diameter. The bedding material shall then be installed in accordance with Type I pipe foundation requirements.

F. Type III - Unstable Soil Conditions - When specifically called for on the Drawings, or when ordered by the Owner, the pipe shall be supported on Type III foundation. The foundation shall be installed where no suitable supporting soil or rock stratum exists within two feet of the bottom of the pipe. The trench shall be excavated two feet deeper than the bottom of the pipe. Each side of the trench shall be supported and maintained by a permanent system of tight, continuous sheeting (and bracing) which shall be driven below the trench bottom as shown and which shall extend to an elevation of at least 12 inches above the top of the pipe. Minimum plank size to be 2" x 12" tongue and groove per Section 02250.

G. Type “D-R-2" material shall then be furnished and placed in the trench for its full width, and to a depth of 8 inches. The pipe foundation material to be supported on a Type VII Foundation, Geotextile Fabric Foundation. Crushed stone, “Type D-3" material shall then be furnished and placed in the trench for its full width. All material shall be spread in layers and each layer shall be compacted until their respective total depths have been built up as

required. The “Type D-3" material depth shall extend a distance of 12 inches from the top of the compacted trench lining up to an elevation 4, 6 or 8 inches below the bottom of the pipe, depending upon the pipe diameter. Bedding material shall then be installed in accordance with Type I Pipe Foundation requirements. All installed sheeting below an elevation established at 12 inches above the top of the pipe shall be left in place and undisturbed. Only the cross struts and whalers shall be gradually removed as construction proceeds.

H. Type IV - Reinforced Concrete Encasement - When specifically called for on the Drawings, or when ordered by the Owner, the pipe shall be supported on Type IV foundation. The trench shall be excavated to a depth below the bottom of the pipe equal to one-quarter of the inside diameter of the pipe or 6 inches, whichever is greater. The excavated space shall then be completely filled with, and the entire pipe encased in, concrete such that the minimum concrete encasement at any point around the outside barrel of the pipe measured 6 inches thick. The total minimum width of the concrete encasement shall equal the outside diameter of the pipe plus 12 inches and such minimum width shall be constant for the entire length of the encasement. Concrete mix, formwork, reinforcing, curing, etc., shall be in accordance with the requirements of Section 03001. Freshly placed concrete shall be maintained free from groundwater and no backfilling of the trench shall begin until initial set has taken place, but not less than 3 hours has elapsed after the encasement has been cast. Backfill a depth of 12 inches over top of concrete before beginning compaction with mechanical equipment.

I. Type V - Concrete Cradle - When specifically called for on the Drawings or when ordered by the Owner, the pipe shall be supported on Type V foundation. The foundation shall be furnished and installed equal to the Type IV foundation, “Concrete Encasement,” except that only that portion of the encasement at and below the horizontal diameter of the pipe shall be encased, forming a true cradle under the bottom half of the pipe. Maintain cradle free from groundwater for a period of 3 hours or until initial set has taken place. Complete pipe foundation in 12-inch lifts as for Type I pipe foundation.

J. Type VI - Plain Concrete Encasement - When specifically called for on the Drawings, or when ordered by the Owner, the pipe shall be supported on Type VI foundation. The foundation shall be furnished and installed equal to the Type IV foundation, “Reinforced Concrete Encasement,” except that no steel reinforcing is required. Maintain encasement free of groundwater for a period of 3 hours or until initial set has taken place.

K. Type VII - Geotextile Fabric Foundation - When specifically called for on the Drawings, or when ordered by the Owner, the pipe foundation shall be supported on a geotextile fabric foundation. The fabric to be placed on the bottom of the excavated foundation and extended upwards to the top of the Type I pipe foundation where it can then be placed flat with a minimum overlap of 6 inches. Longitudinal overlaps to be a minimum of 2 feet. Fabrics to be installed and stretched tight, have no wrinkles so that the fabric will be in tension when placing the pipe foundation material. Geotextile material to be Trevia Type S 1127 by Hoechat Corporation; Mirafi Type 500X by Celanese Corporation; or equal.

L. Type VIII - Pressure Pipe Foundation

1. Pipe and fittings shall be laid on stable foundations, free from standing water, and trimmed to shape. Type A-2 material as described above in PART 2 shall be used for pipe foundation unless otherwise shown on the Drawings. In particular, stones 2 inches or larger shall be removed from the bearing surface of the pipe foundation. At the joints, enough depth and width shall be provided to permit the pipe layer to reach entirely around the pipe so that the joints may be made in a proper manner. Pipes shall have full bearing throughout their entire length, which shall be accomplished by shaping the bottom of the ditch or adequately tamping the backfill under the pipe in accordance with Minimum Compaction Requirements, of Section 02316. When laid in tunnels, pipes shall be blocked in such a manner as to take the weight off the bells. Pipe laid in normal trench excavation shall not be laid on wood blocking. Mechanical type joints shall be tightened within the AWWA recommended torque range.

2. The following sources shall be reviewed by the Contractor for installation guidelines and requirements:

PIPE MATERIAL	SOURCES
Ductile Iron	AWWA Standard C600; Section 02510 Project Drawings; manufacturer's recommendations.

3. Unless otherwise shown on the Drawings, as a minimum, all pipe shall be backfilled to the spring line, including hand tamping with T-bars, shovel slicing, and flatheads, and mechanically compacted and the remaining backfill placed in 12-inch lifts to 1 foot above the crown of the pipe in accordance with Minimum Compaction Requirements, of Section 02316. Backfill material within 12 inches of the pipe shall be free of stones greater than 2 inches in any dimension. Unless otherwise shown on the Drawings, the minimum total finished cover over the top of the pipe barrel of all pressure pipe shall be 5 feet.

3.08. GENERAL BACKFILLING REQUIREMENTS

A. Backfilling shall be started as soon as practicable and after structures or pipe installations have been completed and inspected, concrete has acquired a suitable degree of strength, and subgrade waterproofing materials have been in place for at least 48 hours. Backfilling shall be carried on expeditiously thereafter. Backfill shall be started at the lowest section of the area to be backfilled. Natural drainage shall not be obstructed at any time.

B. Backfill spaces shall be inspected prior to backfilling operations and all unsuitable materials, including sheeting, bracing forms and debris, shall be removed. No backfill shall be placed against foundation walls on structural members unless they are properly shored and braced or of sufficient strengths to withstand lateral soil pressures.

C. Backfill material shall be inspected prior to placement and all roots, vegetation, organic matter, or other foreign debris shall be removed. Stones larger than 12 inches in any dimension shall be removed or broken. Stones shall not be allowed to form clusters with voids.

D. Backfill material shall not be placed when moisture content is more than 2 percent above optimum or is otherwise too high to allow proper compaction. When material is too dry for adequate compaction, water shall be added to the extent necessary.

E. No backfill material shall be placed on frozen ground nor shall the material itself be frozen or contain frozen soil fragments when placed. No calcium chloride or other chemicals shall be added to prevent freezing. Material incorporated in the backfilling operation which is not in satisfactory condition shall be subject to rejection and removal at the Contractor's expense.

F. If the Contractor fails to stockpile and protect on-site excavated material acceptable for backfill, then the Contractor shall provide an equal quantity of acceptable off-site material at no expense to the Owner.

G. Remove surplus backfill material from site.

3.09. EXPLORATORY EXCAVATIONS (TEST PITS)

A. Where shown or ordered by the owner, the contractor shall excavate and backfill test pits in advance of construction to determine conditions or locations of existing underground utilities/facilities. The contractor shall perform all the work required in connection with excavating stockpiling, maintaining, sheeting, bracing, backfilling and restoring the surface for the exploratory excavations (test pits)

B. Test pits which the contractor excavates that are not shown on drawings, or specified or ordered shall be at the contractor's expense.

C. No test pits will be dug prior to DIGSAFELYNY Utility identification

D. Backfill and Fill Materials

1. Excavated materials may be used for backfill provided:

a. Material is sandy loamy or similar to bank run gravel

b. Material is free from debris hazardous materials frozen materials, organic or the deleterious materials. Materials greater than 4-inches in any direction is unacceptable. Material greater than 2-inches in any direction is unacceptable for backfill directly against the water main.

c. Material is reviewed and deemed acceptable by the OWNER

2. Use select granular material within 5 feet or within a 1 on 1 slope from the trench to the edge of pavement of all roadways

E. Backfilling shall be in accordance with Section 02320

F. Cold Patch for temporary repair shall be placed as directed by OWNER

3.10. PIPE TRENCH BACKFILL

A. Pipe foundations, to a depth of 1 foot above the pipe, shall be placed in 12-inch layers and thoroughly compacted by approved mechanical methods to ensure firm bedding and side support. For plastic or polyethylene pipe materials, do not compact directly over pipe until the 2 feet of cover has been installed. Pipe foundations are specified in the appropriate sections covering underground piping. The remainder of the trench shall be backfilled and consolidated in accordance with Section 02316 and Section 02320 and by one of the following methods, depending on the nature of backfill material and location of trench.

B. Procedure I - For cross-country pipelines under uncultivated areas where subsequent settlement can be tolerated:

1. Backfill material shall be placed in the trench and consolidated by packing with the backhoe bucket or other means to prevent voids. Refer to Section 02320 for density requirements. The top layer shall be thoroughly compacted mechanically and slightly mounded to allow for subsequent settlement. Maintain trench surface until completion of contract and regrade as necessary within guarantee period.

C. Procedure II - For lawns, cultivated fields, gardens and non-paved areas where minimum subsequent settlement is required: Top of back fill shall be compacted by mechanical means and surface maintained prior to topsoil installation, fine grading, and seeding.

D. Procedure III - For streets, driveways, parking areas, highways, shoulder areas, miscellaneous type pavements, walks, curbs, gutters and other specified areas:

1. Backfill material shall be placed in layers not exceeding 18 inches thick and each layer thoroughly compacted by a backhoe mounted hydraulic or vibratory tamper, up to 4 feet under pavement (below top of subgrade). The upper 4 feet shall be compacted using hand-guided or small self-propelled vibratory or static rollers or pads in layers not exceeding 12 inches in thickness. Refer to Section 02320 for density requirements.

2. For pipelines in or across State Highways, backfill material and compaction shall conform to the Standard Specifications or specific requirements of the State in which the project is located.

3. Where a gravel-cement mixture (Type F) backfill is specified, the dry gravel and cement mixture shall be placed in the trench, in 6-inch layers and thoroughly tamped using mechanical or vibratory tampers. Water shall not be introduced to the gravel-cement mixture during placing and compacting thereof.

3.11. BACKFILL FOR STRUCTURES

A. Backfill shall be placed in layers not exceeding 8-inches thick and thoroughly compacted by mechanical means.

B. Where pipelines or conduits are to be placed on structural backfill, all backfill under the pipes shall be Size D-2 crushed stone placed in 8-inch layers and mechanically tamped, unless an alternate method of supporting such pipes is specified.

C. Hydraulic compaction by ponding or jetting will not be permitted except in very unusual conditions and then only upon written request and demonstration of its effectiveness by the Contractor and the written acceptance by the Owner.

3.12. PERIODIC CLEAN-UP; BASIC RESTORATION

A. When work involves installation of sewers, drains, water mains, manholes, underground structures, or other disturbances of existing features in or across streets, rights-of-way, easements or private property, the Contractor shall (as the work progresses) promptly backfill, compact, grade and otherwise restore the disturbed area to a basic condition which will permit resumption of pedestrian or vehicular traffic and any other critical activity or function consistent with the original use of the land. The requirements for temporary paving of streets, walks, and driveways are specified elsewhere. Unsightly mounds of earth, large stones, boulders and debris shall be removed so that the site presents a neat appearance.

B. The Contractor shall perform the clean-up work on a regular basis and as frequently as required. Basic site restoration in a particular area shall be accomplished immediately following the installation or completion of the required facilities in that area. Furthermore, such work shall also be accomplished if partially completed facilities must remain incomplete for some time period due to unforeseen circumstances.

C. Upon failure of the Contractor to perform periodic clean-up and basic restoration of the site to the Owner's satisfaction, the Owner may, upon five days prior written notice to the Contractor, without prejudice to any other rights to remedies of the Owner, cause such work for which the Contractor is responsible to be accomplished to the extent deemed necessary by the Owner, and all costs resulting therefrom shall be charged to the Contractor and deducted from the amounts of money that may be due him.

3.13. TOLERANCES

A. Top Surface of Backfilling - Under Paved Areas1/2 -inch from required elevations.

B. Top Surface of General Backfilling - $\pm$1 -inch from required elevations.

3.14. FIELD QUALITY CONTROL

A. Field inspection and testing will be performed under provisions of Section 01400.

B. The Contractor shall designate an experienced person who shall be responsible for inspection of excavations on a daily basis, document, and maintain daily trenching and excavation logs per OSHA 29 CFR 1926.

C. Tests and analysis of fill material will be performed in accordance with ASTM [D1557] and with Section 02320.

D. Compaction testing will be performed in accordance with ASTM D1556, ASTM D2922, and with Section 02320.

E. If tests indicate Work does not meet specified requirements, remove Work, replace and retest at no cost to Owner.

F. Frequency of Tests – As required by Owner

3.15. PROTECTION OF FINISHED WORK

A. Protect finished Work under provisions of Section 02260.

B. Regrade and compact fills subjected to vehicular traffic.

END OF SECTION

SECTION 02319

SELECT GRANULAR MATERIALS

PART 1 GENERAL

1.01. SECTION INCLUDES

A. Bedding and Pipe Encasement

B. Select Backfill

1.02. RELATED SECTIONS

A. Section 02315 – EXCAVATION

B. Section 02316 – COMPACTION

C. Section 02317 – TRENCHING

D. Section 02318 – ROCK REMOVAL

E. Section 02741 – ASPHALT PAVING – HOT MIX ASPHALT (HMA)

F. Section 02900 – RESTORATION

1.03. REGULATORY REQUIREMENTS

A. NYSDOT Standards, latest revision

1.04. SUBMITTALS

A. The CONTRACTOR shall furnish representative samples, sieve analysis and certification of specification compliance for the select granular materials to the OWNER and advise on the location of the source.

B. The CONTRACTOR shall submit copies of proposed materials, methods and operations of backfilling and compaction to the OWNER for review prior to the start of work. A list of equipment to be used in CONTRACTOR'S Methods and Operations must be included

PART 2 PRODUCTS

2.01. PIPE BEDDING AND ENCASEMENT

A. NYSDOT No. 1 Crushed Stone or Crushed Gravel – bedding for PVC, DIP, HDPE, and CIP piping.

1. Thoroughly washed, clean, sound, tough, hard, crushed limestone conforming to the requirements of NYSDOT Item No. 703.0201 or crushed gravel conforming to the requirements of NYSDOT Item No. 703.0202, having the following gradation by weight:

% Passing	Sieve
100	1 - inch
90-100	½ - inch
0-15	¼ - inch

B. NYSDOT No. 2A Crushed Stone or Crushed Gravel – bedding for DIP and concrete pipe.

1. Shall be a No. 1 and No. 2 blend, thoroughly washed, clean, sound, tough, hard, crushed limestone conforming to the requirements of NYSDOT Item No. 703.0201 or crushed gravel conforming to the requirements of NYSDOT Item No. 703.0202, having the following gradation by weight:

% Passing	Sieve
100	1 ½ - inch
93-100	1 - inch
27-58	½ - inch
0-8	¼ - inch

C. NYSDOT Concrete Sand – bedding for copper tubing.

1. Washed, fine aggregate sand shall conform to the requirements of NYSDOT Item No. 703.07, having the following gradation by weight:

% Passing	Sieve
100	3/8 -inch
90-100	No. 4
70-100	No. 8
50-85	No. 16
25-60	No. 30
10-30	No. 50
1-10	No. 100
0-3	No. 200

2.02. STRUCTURAL AND ROADWAY SELECT BACKFILL

A. NYSDOT Subbase Type 2 Crusher Run Stone or Crusher Run Gravel. Material shall conform to the requirements of NYSDOT Item No. 304.12, having the following gradation by weight

% Passing	Sieve
100	2 - inch
25-60	¼ - inch
27-58	No. 40
0-8	No. 200

B. Pea-gravel NYSDOT Type 1A Screened Gravel for the annular space between the carrier pipe and the casing pipe.

1. Screened gravel shall conform to the requirements of NYSDOT Item No. 703.0203 and have the following gradation by weight

% Passing	Sieve
100	½ - inch
90-100	¼ - inch
0-15	1/8 - inch

C. Follow NYSDOT Standard Specifications if gradation data varies from those listed above.

D. Recycled concrete or asphalt pavement shall not be allowed.

E. Slag of any type shall not be allowed.

F. Flowable fill shall not be allowed unless specified by the OWNER.

PART 3 EXECUTION

3.01. INSTALLATION

A. Select granular material as specified or directed for watermain bedding or encasement shall be placed in accordance with Section 02315 – Excavation, Section 02316 - Compaction and Section 02317 – Trenching.

B. Select backfill where specified or directed shall be placed in accordance with the backfilling provisions of Section 02315 – Excavation and Section 02317 – Trenching.

3.02. DISPOSAL OF DISPLACED MATERIALS

A. Materials displaced through the use of the above materials shall be wasted or disposed of by the CONTRACTOR and the cost of such disposal shall be included in the appropriate bid item.

END OF SECTION

SECTION 02510

WATER DISTRIBUTION PIPING AND APPURTENANCES

PART 1 GENERAL

1.01. SECTION INCLUDES

A. Water main piping including fittings, accessories and materials.

B. Connection of water mains to existing piping, hydrants, valves, meters, and tanks.

C. Water services to serve domestic or fire protection.

D. Installation.

1.02. RELATED SECTIONS

A. Section 01050 - PAYMENT ITEM DESCRIPTIONS

B. Section 01200 - SUBMITTALS

C. Section 01500 - TEMPORARY FACILITIES

D. Section 01600 - RECORD DOCUMENTS

E. Section 02260 - PROTECTION OF EXISTING FACILITIES

F. Section 02316 - COMPACTION

G. Section 02317 – TRENCHING

H. Section 02511 - WATER VALVES AND HYDRANTS

I. Section 02674 - PRESSURE TESTING OF WATER DISTRIBUTION SYSTEMS

J. Section 02675 - DISINFECTION OF WATER DISTRIBUTION SYSTEMS

K. Section 03001 - CONCRETE

1.03. REFERENCES

A. American National Standard Institute (ANSI)

B. American Water Works Association (AWWA)

C. American Society for Testing Materials (ASTM)

D. ANSI A21.4/AWWA C104 Cement-mortar lining for ductile iron and gray iron pipe and fittings for water

E. ANSI A21.4/AWWA C105 Polyethylene encasement for ductile iron piping for water and other liquids

F. ANSI A21.10/AWWA C110 Ductile iron and gray iron fittings, 3-inch through 48-inch, for water and other liquids

G. ANSI A21.11/AWWA C111 Rubber gasket joints for ductile iron and gray iron pressure pipe and fittings

H. ANSI A21.50/AWWA C150 Thickness design of ductile iron pipes

I. ANSI A21.51/AWWA C151 Ductile iron pipe centrifugally cast in metal molds and sand lined molds for water and other liquids

J. AWWA C153, American National Standard For Ductile-Iron Compact Fittings. 3 In. Through 24 Inch And 54 Inch. Through 64 In.

K. AWWA C600 Installation of ductile iron water mains and their appurtenances

L. ASTM A126 Gray iron castings for valves, flanges, and pipe fittings

M. ASTM A536 Standard Specification For Ductile Iron Castings

N. NSF/ANSI Standard 61

O. Underwriter's Laboratories (Ul)

P. International Organization For Standardization (ISO)

Q. Factory Mutual Research Corporation

R. 1996 Safe Drinking Water Act

1.04. SUBMITTALS

A. Submit under provisions of Section 01200, Submittals.

B. Product Data - Provide data describing conformance to ANSI/AWWA/ASTM codes, materials, sizes, class, dimensions, joint type, fittings, and pipe accessories.

C. Manufacturer's Installation Instructions - Indicate special procedures required to install products specified.

D. Results of shop tests, if required.

E. Manufacturer's Certificate - Certify that products meet or exceed specified requirements

1.05. PROJECT RECORD DOCUMENTS

A. Submit documents under provisions of Section 01600, Record Documents.

B. Submit marked-up record plans, including record location if different from plan, variations in specified depth of more than +6 inches, record a minimum of two ties on all hydrants, bends, valves, and service connections.

C. Identify and locate on record drawings the exposed unmapped utilities or services

1.06. REGULATORY REQUIREMENTS

A. Conform to requirements of regulatory agencies having jurisdiction over the work.

B. Conform to permit requirements obtained by Owner.

1.07. FIELD MEASUREMENTS

A. Prior to start of construction, verify by field measurements that existing conditions and structures are as shown on Drawings, notify Owner of specific discrepancies or potential interferences.

B. Prior to start of construction where ordered, verify by exploratory excavations that existing underground utility locations and elevations are as shown on the Drawings or to confirm marked location and elevation of underground utilities by the organization identified in Section 02260, Protection of Existing Facilities.

C. Where connections are to be made to existing pipes, confirm the type of material and the outside dimensions of pipes.

1.08. PRODUCT DELIVERY, STORAGE, AND HANDLING

A. During delivery and handling, all materials shall be braced and protected from any distortion or damage; any such distortion or damage shall be basis for rejection of the materials.

B. Equipment used for unloading shall be covered with wood or rubber to avoid damage to the exterior of the pipe, fittings and accessories. Do not drop or roll materials off trucks. All ductile iron pipe and fittings shall be handled with padded slings or other appropriate equipment. The use of cables, hooks or chains will not be permitted.

C. The materials shall be inspected before and after unloading. Materials that are found to be cracked, gouged, chipped, dented or otherwise damaged will not be accepted.

D. Interiors of pipe, fittings and accessories shall be kept free from dirt and foreign matter.

E. Store pipe and fittings on heavy wood blocking or platforms so they are not in contact with the ground.

F. Pipe, fittings, and specials shall be unloaded opposite to or as close to the place where they are to be used as is practical to avoid unnecessary handling

PART 2 PRODUCTS

2.01. DUCTILE IRON PIPE - BURIED

A. All water main piping shall be ductile iron, except water main installed by horizontal directional drilling.

B. Pipe material, sizes, classes, etc. shall be furnished and installed as listed herein and as shown on the Drawings.

C. All products, including wetted parts, shall be certified to meet NSF/ANSI Standard 61

D. Pipe shall be fully gauged

E. Pipe shall be ANSI A21.51/AWWA C151 - Ductile Iron Pipe Material, Thickness Class 52, with rubber gasket push-on joints. Fittings shall be mechanical joint conforming to ANSI 21.11/AWWA C111 and ANSI A21.53/AWWA C153.

F. Ductile iron pipe shall have cement mortar linings for potable water which shall conform to ANSI A21.4/AWWA C104 as follows:

1. Double Thickness - Linings shall consist of cement mortar, centrifugally applied and shall not be less than 1/8 inch for 3 to 12 inches inclusive; 3/16 inch for 14 to

2. 24 inches inclusive, and 1/4 inch for 30 to 54 inches inclusive. The inside shall be given a seal coat of asphalt material as described in ANSI A21.4/AWWA C104.

G. Protective coatings for ductile iron pipe potable water pipes shall be an asphaltic coating approximately 1 mil thick and conform to requirements of ANSI 21.51/AWWA C151

H. The exterior of ductile iron pipe shall be coated with a layer of arc-sprayed zinc per ISO 8179. The mass of the zinc applied shall be 200 g/m2 of pipe surface area. A finishing layer topcoat shall be applied to the zinc. The coating system shall conform in every respect to ISO 8179-1 “Ductile iron pipes – External zinc-based coating – Part 1: Metallic zinc with finishing layer. Second edition 2004-06-01

I. Restrained joint pipe shall be designed for a water working pressure of 350 psi for pipe sizes 4-inch through 20-inch and 250 psi for pipe sizes 24-inch through 54-inch.

2.02. DUCTILE IRON PIPE - WITHIN VAULTS/CHAMBERS

A. Ductile iron pipe and fittings located within vaults shall be the same as buried ductile iron piping, except as noted below.

B. Joints - Fittings shall be furnished with flanged joints. The type of joint shall meet the following applicable requirements:

1. Flanged Joint

a. Flanges shall be screw-on type flanges and the face of the flange shall be machined after installation of the flange onto the pipe.

b. No raised surface is allowable on cast iron flanges. Flanges shall be 125-lb. ASA flanges rated for a maximum working pressure of 150 psi.

c. The fittings shall be of standard lengths given under the ANSI Specification B16.1, unless otherwise noted.

d. The pipe lengths shall be fabricated to meet the requirements of the Drawings.

e. Shall be brought to exact alignment and all gaskets and bolts or studs inserted in their proper places.

f. Bolts or studs shall be uniformly tightened around the joints.

g. Where stud bolts are used, the bolts shall be uniformly centered in the connections and equal pressure applied to each nut on the stud.

h. Gaskets shall be ring type, minimum 1/16-inch thick, cloth inserted rubber gaskets.

i. Flanges shall conform to AWWA Standard C115 (ANSI A21.15) with bolts provided in the size and number called for and in accordance with the American Standard with hexagonal nuts.

j. For bolt sizes and lengths, the “Handbook of Cast Iron Pipe” should be consulted.

k. Bolts and hardware shall be Type 316 stainless steel.

l. Each flanged joint shall have a bead of silicone caulk applied to the full perimeter of the joint after finish painting is completed.

C. Flanged Adapters

1. Couplings and flange coupling adaptors shall be unrestrained, unless otherwise shown on the Contract Drawings.

2. Where required, flange coupling adapters shall be restrained to process piping by the use of tie rods.

3. Couplings and/or adapters shall be provided by the Contractor for the alignment of similar types of pipe or connecting dissimilar pipe materials as required in accordance with the detail shown on the Drawings.

4. Couplings and flange adaptors shall be fusion bonded epoxy coated, NSF 61 certified.

5. Gaskets shall be NSF 61 certified.

6. Bolts and nuts shall be Type 316 stainless steel

7. Unions shall be provided adjacent to all pumps, tanks, valves and other pieces of equipment where soldered or screwed joints are utilized

8. Where couplings and adapters are to be used they shall be installed in complete accordance with the manufacturer’s recommendations

2.03. PIPE ACCESSORIES

A. Fittings

1. Same materials, class, coatings and linings as pipe unless under Article 2.01 it was specifically described otherwise. Fittings molded or formed to suit pipe size and end design and in required tee, bends, elbow, couplings, adapters, and other configurations.

B. Where piping is to be installed, above ground or within structures provide adequate supports and bracing by means of hangers, brackets or concrete supports as may be required by the location.

C. Ductile iron anchor coupling shall provide positive joint restraint by incorporating an integrally cast anchor gland (stop shoulder) at one end and an anchor, mechanical joint or plain end at the other end. The plain end, when fitted with a standardized mechanical joint gasket is to be inserted into a mechanical joint bell and bolted tight. A split, rotating ring shall be provided on the elbows, tees and on one end of the couplings or anchor pipe to permit vertical alignment regardless of the mating bolt hole alignment.

D. Couplings

1. shall be Smith-Blair Model 441, Hymax Grip by KRAUSZ, or Alpha by Romac Industries.

2. Couplings shall be provided with stainless steel bolts and hardware

E. Reducers shall be eccentric unless otherwise specified

F. All nuts, bolts and washers for flanges and accessories shall conform to ANSI B18.2.1 and ANSI B18.2.2, respectively and shall be Type 304 stainless steel, high strength, low alloy steel or fluorocarbon coated as specified herein

G. Caps And Plugs

1. Conform to the requirements of AWWA C110 for material, dimensions, tolerance, tests, markings and other requirements.

2. Caps and plugs shall be mechanical joint.

3. All nuts and tee bolts for mechanical joint accessories shall be fluorocarbon coated as specified herein.

4. Threaded outlets or taps, shall be provided in plugs and caps as specified or required.

H. Solid Mechanical Joint Sleeves

1. Conform to the requirements of AWWA C153 for material, dimensions, tolerance, tests, markings, and other requirements of mechanical joint class 350 ductile iron solid sleeves.

2. Unless otherwise specified, provide long laid length sleeves complete with follower glands, rubber gaskets and fluorocarbon coated nuts, tee bolts, and accessories.

3. Manufacturer

a. American Cast Iron Pipe Co

b. Sigma Corp.

c. Star Pipe Products,

d. McWane, Inc.

e. US Pipe

I. Friction Clamps - Push-On Ductile Iron Pipe Joint Restraining Device

1. Restraining push-on ductile iron pipe joints shall be accomplished by use of a joint restraint system that consists of restraining rods and split ductile iron clamping rings, installed on the spigot and behind the bell. The clamping ring shall incorporate a series of machined serrations on the inside surface to provide 360 degree contact and support of the pipe barrel.

2. Threaded restraining rods and bolts and clamping bolts and nuts shall be fluorocarbon coated or type 304 stainless steel.

3. The joint restraint rings shall be made of high strength, grade 65-45-12 ductile iron conforming to ASTM A536.

4. Dimensions of the gland shall be such that it can be used with the standardized mechanical joint bell conforming to AWWA C111 and AWWA C153.

5. The assembly shall have a rated pressure with a minimum two to one safety factor of 350 PSI in the sixteen inch size and below

6. Manufacturer, for use on ductile iron pipe:

a. Uni-Flange Series 1450

b. EBAA Series 1700

c. Or approved equal.

J. Fluorocarbon Coated Nuts and Bolts

1. T-bolts shall be heat treated ductile iron material with a minimum of 65,000 psi tensile strength and 45,000 psi yield strength meeting ANSI/AWWA C111/A21-95.

2. Nuts and bolts shall have a fluorocarbon SC-1 coating.

3. Manufacturer:

a. Standco Industries,

b. Or approved equal.

PART 3 EXECUTION

A. Contractor shall verify all existing conditions.

B. The drawings and specifications may contain information relating to conditions below the ground surface at the site of proposed work, but such information is furnished without guarantee as to it being complete or correct. The contractor shall assume all risk and responsibilities and shall complete the work in whatever manner and under whatever conditions he may encounter or create without extra cost to the owner. Location of existing underground facilities at or contiguous to the site is based upon information and data furnished to the Owner by owners of such underground facilities or others, and owner does not assume responsibility for the accuracy or completeness thereof. The contractor shall perform exploratory excavations in advance of this work to verify the location, depth, size, and material of existing utilities which may interfere with the work to be performed under this contract. All damage to existing utilities shall be the contractor's cost to repair or replace.

C. Verify that trench cut, excavated base and pipe bedding are ready to receive pipe and that excavations and pipe bedding dimensions and elevations are as shown on drawings.

D. All pipe or fittings which have been damaged in transit or which are obviously deformed or refinished in any way shall be rejected, marked, and removed from the site of the work. Any pipe or fitting which the Owner suspects is improper for the job shall be temporarily rejected,

marked, and set aside for subsequent investigation to determine its conformity with the specifications.

E. All pipe fittings and specials shall be carefully inspected in the field before lowering into the trench. Cracked, broken, warped, out-of-round, damaged pipe joints including damaged pipe lining or coatings or specials, as determined by the Owner, shall be culled out and not installed. Such rejected pipe shall be clearly tagged in such manner as not to deface or damage it, and the pipe shall then be removed from the job site by the contractor at his own expense.

3.02. PREPARATION

A. The contractor shall have on the job site with each pipe laying crew, all the proper tools, gauges, pipe cutters, lubricants, etc. To handle, cut and join the pipe.

B. Flat-bottom trenches of required width shall be excavated to the necessary depth as required and maintained in accordance with section 02317 – Trenching and Backfill.

C. Prior to installing the pipe foundation material, trenches shall have all water removed and all work performed in a dry trench.

D. All pipes, fittings and specials which are to be installed in the open trench excavation shall be properly bedded in an uniformly supported on pipe foundations of the type specified in section 02317, trenching, and shown on the drawings. In particular, stones 2 inches and larger shall be removed from the bearing surface of the pipe foundation.

E. Pipe foundation bedding material shall be spread in maximum 8-inch layers and each layer shall be compacted up to the spring line of the pipe.

F. Compaction methods include hand tamping with t-bars, flat heads, shovel slicing as well as mechanical compactors.

G. The contractor shall perform his bedding operations with care to maintain line and grades.

H. Suitable holes or depressions shall be provided in the pipe bedding to permit adequate bedding of bells, couplings, or similar pipe projections.

3.03. LINES AND GRADES

A. The contractor shall furnish all labor, materials, surveying instruments, and tools to establish and maintain all lines and grades. The contractor shall have personnel on duty or on standby call, at all times, who are qualified to check line and grade of water mains as they are installed.

B. Easements, property, and other control lines necessary for locating the work are shown on the drawings.

C. During construction, the contractor shall provide the Owner, at his request, all reasonable and necessary materials, opportunities, and assistance for setting stakes and making measurements, including the furnishing of one or two rodmen or chainmen as needed at intermittent times.

D. The contractor shall carefully preserve bench marks, reference points and stakes established by the owner, and in case of willful or careless destruction by his own operations he will be charged with the resulting expense to reestablish such destroyed control data and shall be

responsible for any mistakes or delay that may be caused by the unnecessary loss or disturbance of such control data.

E. The contractor may use laser equipment to assist in setting the pipe provided he can demonstrate satisfactory skill in its use.

F. The use of string levels, hand levels, carpenter's levels or other relatively crude devices for transferring grade or setting pipe are not to be permitted.

3.04. TOLERANCES

A. Pipes shall be laid to the lines and grades shown on the drawings.

B. Minimum depth of cover shall be maintained as shown on the drawings or as described herein.

3.05. INSTALLATION

A. Installation of ductile iron pipe to be in conformance with AWWA c600 except as modified in this section or referenced sections or as shown on the drawings.

B. The contractor shall furnish slings, straps and/or approved devices to provide satisfactory support of the pipe when it is lifted. Transportation from storage areas to the trench shall be restricted to operations which can cause no damaged to the pipe or lining or castings.

C. The pipe shall not be dropped from trucks onto the ground or into the trench.

D. Each pipe section shall be placed into position in the trench on the pipe bedding in such manner and by such means required to cause no injury to the pipe, persons or to any property.

E. The method of laying and jointing the pipe shall be in accordance with the recommendations of the manufacturer and as approved by the owner. Each pipe shall be aligned with that already in place, forced home completely with horizontal axial movement and held securely in position. The bell of each pipe length to be laid in the same direction the installation is proceeding.

F. At the joints, enough depth and width shall be provided to permit the pipe layer to reach entirely around the pipe so that the joints may be made in accordance with the manufacturer's recommendations. Mechanical-type joints shall be tightened within the AWWA recommended torque range.

G. Pipes, fittings, and specials shall be firmly bedded in the pipe foundation and shall have full bearing throughout their entire length, which shall be accomplished by combination of shaping the bedding and adequately compacting the pipe bedding and backfill under and around the pipe to the spring line of the pipe. The remaining backfill placed in 12-inch lifts to 1-foot above the crown of the pipe in accordance with minimum compaction requirements of section 02316 - Compaction. The remaining backfill is to be installed in accordance with sections 02317 - Trenching, and 02316 - Compaction.

H. When laid in tunnels, pipes shall be blocked in such a manner as to take the weight off the bells. Pipe laid in normal trench excavation shall not be laid on wood blocking.

I. Backfill material within 12 inches of the pipe shall be free of stones greater than 2 inches in any dimension.

J. Unless otherwise shown on the drawings, the minimum total finished cover over the top of the pipe barrel of all pressure pipe shall be 5 feet.

K. Refer to section 02317 - Trenching and Backfill for other installation guidelines and requirements.

L. To deflect a pipe joint, first join the pipe in the proper manner and then deflect the pipe within the allowable deflection recommended by the manufacturer.

M. Install magnetic locating tape, trace wire, minimum 2 inches wide with the words "water line below" along the centerline of the installed water main for the entire length at a maximum depth of 2 feet 0 inches below finished grade.

N. Mechanical (compression) joining of pipe and fittings is only permissible when joining polyethylene pipe to unlike materials. HDPE stiffeners shall be utilized with all mechanical (compression) fittings. Blocking must be provided at changes in direction for any mechanical fittings. Use of positive restrained joints fittings (non-friction type) is permissible when approved by Owner.

3.06. CONNECTIONS TO EXISTING PIPES

A. Connections to existing water mains using wet taps (tapping sleeve and valve) shall be provided where shown on the drawings.

B. Tapping sleeves and tapping valves shall be in accordance with section 02511, water valves and hydrants.

C. Contractor shall verify outside dimension of existing water main prior to ordering tapping sleeves or couplings.

D. Coordinate shutdown of existing water mains (where permitted) with the owner. Provide proposed work sequence and timeline for owner and Owner review a minimum of five working days prior to proposed shutdown.

3.07. BRACING AND BLOCKING

A. All bends, tees, crosses, plugs, etc., shall be braced and blocked with wood and then anchored with concrete thrust blocks so that there will be no movement of the pipe in the joints due to the internal or external pressures.

B. The concrete shall be placed around the fittings and completely fill the space between the fittings and walls of the trench, from 6 inches below the fittings of pipe to 12 inches above the fittings and in accordance with the dimensions and details shown on the drawings.

C. The anchor concrete shall be so placed that the bell and spigot joints or other joints may be tightened, if necessary.

D. Steel ties to be used only where shown on the drawings.

E. Prior to installation of the concrete anchor, the contractor shall wrap all fittings with a minimum of 8-mil thick polyethylene.

F. Refer to details shown on the drawings.

G. Cast-in-place concrete used in constructing concrete thrust blocks shall conform to requirements specified in section 03001, concrete.

H. Measuring, mixing, transporting and placing of concrete shall conform to American Concrete Institute (ACI) publication 304.

I. Immediately after placement, protect concrete from premature drying, excessively hot or cold temperatures, and mechanical injury.

J. Maintain concrete with minimal moisture loss at relatively constant temperature for period necessary for hydration of cement and hardening of concrete.

3.08. TEMPORARY PLUGGING

A. At all times when pipe laying is not actually in progress, the open ends of the pipes shall be closed temporarily with pipe plugs or by other means such that there is no possibility of any water or foreign material entering the line. If water is in the trench when work is resumed, the plugs shall not be removed until the water has been removed and work can proceed in a dry stable trench.

3.09. CLEANING PIPELINE

A. At the conclusion of the work, the contractor shall thoroughly clean all new pipes by flushing with water or other means to remove all dirt, stones, pieces of wood, etc., which may have entered during the construction period.

B. Pipes shall be flushed at a minimum rate of 2.5 feet per second for a suitable duration.

C. If, after this cleaning, any obstructions remain, they shall be corrected to the satisfaction of the Owner.

D. Where required, the contractor shall use mechanical methods to clean pipes when flushing does not remove all obstructions or material.

3.10. PRESSURE TESTING AND FLUSHING

A. Pressure testing and flushing of the water mains shall be performed in accordance with section 02674 - Pressure Testing of Water Distribution Systems.

B. Any section of pipe that fails the pressure test shall be dug up and replaced or permanently repaired as approved by the Owner. All repairs and/or replacements shall be the contractor's cost. The replaced or repaired section shall then be retested.

3.11. DISINFECTION

A. Disinfection of water mains shall be performed in accordance with section 02675, Disinfection of Water Distribution Systems.

3.12. ENCASEMENT

A. Where shown on the drawings, pipes shall be encased in concrete; details and requirements for encasement of pipes are described in section 02317 – Trenching, and shown on the drawings.

B. Requirements for encasement of pipes 10 inches and smaller, shown under a base slab, are described in section 02317 – Trenching.

3.13. SERVICE CONNECTIONS

A. When shown on the contract drawings, or ordered by the Owner, water services shall be furnished and installed, and to the extent shown or ordered by the owner as specified in Section 02512, Water Services and Appurtenances.

3.14. VALVES AND HYDRANTS

A. Valves and hydrants to be installed on this project are specified in Section 02511, Water Valves and Hydrants.

B. Valve and hydrant details for connection to the water main are shown on the Standard Drawings.

3.15. MAGNETIC PIPE MARKING TAPE

A. Magnetic pipe marking tape as manufactured by C. H. Hanson Products, Paul Potter Warning Tape, or approved equal shall be installed above all new water main.

B. Tape shall be 3 inches wide consisting of two (2) exterior plies of polyethylene with an aluminum alloy foil core.

C. Tape shall be blue color and labeled: “WATER” in black letters.

3.16. THRUST RESTRAINTS

A. Thrust restraints for water mains shall be accomplished by the use of both thrust blocks and mechanical restraints for sizes through 12 inches. Joints for water mains 16 inches and larger shall have thrust restraints provided by harnessed joints only. Restraints shall be in the form of retainer glands; ductile iron locking segments with spigot weldment; or anchors of the size and type specified or as required by the pressure and stability of the supporting surface.

B. Thrust restraints shall be installed at all changes in direction, changes in size, dead ends or other locations where shown or directed.

C. Valves shall be treated as a bulkhead condition and pipe joints shall be restrained on both sides of the valve.

D. Cast in place concrete used for thrust restraints shall have developed the required strength prior to testing of the water main.

E. When approved for use by OWNER, tie rods and nuts for thrust restraints shall be of high tensile steel and shall have minimum yield strength of 70,000 psi.

F. Tie rods and nuts installed underground shall be coated with two coats of coal tar pitch preservative coating after installation.

G. Oil, grease, paint, or any coating which requires drying will not be acceptable.

H. All fire hydrant branches from the mainline tee to and including valve and hydrant shall be restrained.

I. All piping installed for interconnections shall be restrained.

J. All piping installed within casing pipes shall be restrained for the full length of the pipe installed within the casing pipe.

K. All piping installed within the limits of creek crossings shall be restrained for the full length of the creek crossing limits.

3.17. SERVICE CONNECTIONS

A. Connections to in-service pressure water mains shall be in accordance with the applicable provisions of Section 02512 – Water Services and Appurtenances.

3.18. CONCRETE THRUST BLOCKS

A. Solid concrete blocks shall be used for proper blocking. Hollow concrete blocks or wooden blocking are not acceptable. Cast-in-place wet concrete mix shall be used for vertical bends and anchor collars.

END OF SECTION

SECTION 02511

WATER VALVES AND HYDRANTS

PART 1 GENERAL

1.01. SECTION INCLUDES

A. Furnishing the several types of valves and stops.

B. Hydrants.

C. Valve operators.

D. Valve boxes.

E. Installation.

F. Testing and disinfection.

1.02. RELATED SECTIONS

A. Section 01050 - PAYMENT ITEM DESCRIPTIONS

B. Section 01200 - SUBMITTALS

C. Section 01500 - TEMPORARY FACILITIES

D. Section 01600 – RECORD DOCUMENTS

E. Section 02316 - COMPACTION

F. Section 02317 – TRENCHING

G. Section 02510 - WATER DISTRIBUTION PIPING AND APPURTENANCES

H. Section 02674 - PRESSURE TESTING OF WATER DISTRIBUTION SYSTEMS

I. Section 02675 - DISINFECTION OF WATER DISTRIBUTION SYSTEM

J. Section 03001 - CONCRETE

1.03. REFERENCES

A. American National Standard Institute (ANSI)

B. American Water Works Association (AWWA)

C. American Society for Testing Materials (ASTM)

D. AWWA C500 Gate Valves For Water And Sewerage Systems

E. AWWA C502 Dry Barrel Fire Hydrants

F. AWWA C504 Rubber Seated Butterfly

G. AWWA C506 Backflow Prevention Devices

H. AWWA C507 BALL VALVES 6 INCHES THROUGH 48 INCHES

I. AWWA C508 SWING CHECK VALVES FOR WATERWORKS SERVICE

J. AWWA C509 RESILIENT-SEATED GATE VALVES FOR WATER SYSTEMS

K. AWWA C550 PROTECTIVE INTERIOR COATINGS FOR VALVES AND HYDRANTS

L. ASTM A126 GRAY IRON CASTINGS

M. ASTM A48 GRAY IRON CASTINGS FOR VALVES, FLANGES AND PIPE FITTINGS

N. NSF/ANSI Standard 61

O. 1996 Safe Drinking Water Act

1.04. SUBMITTALS

A. Submit under provisions of Section 01200, Submittals.

B. Product Data - Provide data describing conformance to ANSI/AWWA/ASTM codes, materials, sizes, class, dimensions, joint type, fittings, and pipe accessories.

C. Manufacturer's Installation Instructions - Indicate special procedures required to install products specified.

D. Manufacturer's Certificate - Certify that products meet or exceed specified requirements

1.05. PROJECT RECORD DOCUMENTS

A. Submit documents under provisions of Section 01600, Record Documents.

B. Submit marked-up record plans, including record location if different from plan, variations in specified depth of more than +6 inches, record a minimum of two ties on all hydrants, bends, valves, and service connections.

C. Identify and locate on record drawings the exposed unmapped utilities or services

1.06. REGULATORY REQUIREMENTS

A. Conform to requirements of regulatory agencies having jurisdiction over the work.

B. Conform to permit requirements obtained by Owner.

PART 2 PRODUCTS

2.01. MATERIALS

A. Valve size, type of valve, joint type, class, lining, coatings shall be installed as listed herein

B. Valves shall be of standard manufacturer and of highest quality, both as to material and workmanship, conforming to the latest edition of AWWA standards specified.

C. All valves and hydrants shall have the manufacturer's name monogrammed or initialed by the manufacturer thereon and shall be identified by catalog numbers.

D. All valves shall be provided with hub, spigot, mechanical joint, flange or screwed ends as described herein.

E. Valves, 2 inches in nominal diameter and smaller shall be all brass or bronze.

F. Valves over 2 inches in nominal diameter shall be iron bodied, fully brass or bronze mounted.

G. All surface forming joints or bearing surfaces shall be machined to a perfect fit.

H. All disc and seat rings shall be carefully and thoroughly secured in place with the iron castings machined where the rings are bare and the backs of the rings machined all over.

I. After the rings have been fastened securely in place, the front shall be machined all over to a perfectly true and smooth bearing surface.

J. All valves with non-rising stems shall have valve position indicators.

K. Valves shall open clockwise (right) unless otherwise specified

2.02. GATE VALVES

A. Gate valves 2 inches and smaller shall be bronze gate valves with rising stem, double wedge disc, screwed bonnet, screwed ends, 125-pound rating, and shall be re-packable under pressure in full open position.

B. All gate valves 2 inches and smaller shall be Stockham Figure 107; Lunkenheimer Figure 2127; or equal.

C. All other interior gate valves shall conform to AWWA Standard C500 and shall be of iron body, bronze mounted, double-disc type with outside screws and yokes and have 125 pound ANSI flanged ends.

1. Valves shall be constructed with bolted bonnets, provided with cast iron stuffing boxes having bolted followers.

2. The stuffing boxes shall be so arranged as to be readily accessible and shall be packed ready for use with synthetic fiber, graphite impregnated stuffing.

D. Stems shall be fabricated of brass or bronze with the lath-cut, half-V pattern threads. Double-disc type gate valves shall be Kennedy Valve Manufacturing, Mueller, or equal.

E. All interior gate valves shall be equipped with hand wheel operators unless otherwise specified. Hand wheel or chain and wheel operators shall be replaceable with 2-inch operating nuts without replacing the valve stem or removing the bevel gears.

F. All underground gate valves shall be non-rising stems, 2 inch operating nuts, O-ring seal and shall open clockwise (right).

1. Underground gate valves shall be of the iron body, bronze mounted type conforming to AWWA Standard C500.

2. Mechanical joint type designed for underground use at 150 psi.

3. Underground gate valves shall be Mueller, Kennedy Valve Manufacturing Company, or equal. Pipe material, sizes, classes, etc. shall be furnished and installed as listed herein and as shown on the Drawings.

2.03. RESILIENT SEATED GATE VALVES

A. Resilient seated gate valve shall conform to all applicable provisions of Articles 2.01 and 2.02 of this section.

B. All resilient seated gate valves shall provide a full pipe opening when fully opened.

C. Resilient seated gate valves shall conform to AWWA Standard C509.

D. All resilient seated gate valves shall be as manufactured by Kennedy Valve Manufacturing, Mueller, or equal.

E. All products, including wetted parts, shall be certified to meet NSF/ANSI Standard 61

2.04. CORPORATION STOPS AND CURB STOPS

A. For corporation and curb stops for water services Refer to Section 02512.

2.05. VALVE BOXES

A. Valve boxes shall be provided for all buried valves unless they are housed in valve chambers.

B. Valve boxes shall be made of good quality cast iron and shall be of the sectional adjustable type. The long section shall be a minimum of 5 inches in inside diameter and fit around the stuffing box of the valve; or over the valve operator, if a two-section box is used; or to fit a circular or oval-base section if a three-section box is used.

C. The upper section shall be arranged to screw on over the adjoining long section and shall also be full diameter. Screw-type valve boxes shall be used unless otherwise specified. Valve boxes shall be provided with cast iron lids or covers.

D. Lids or covers shall be marked for the service for which the valve is used by casting words such as “WATER” for potable water system. An arrow shall be provided on the cover to indicate the direction in which the valve is turned to open; this arrow shall be labeled with the word “OPEN”.

E. The overall length of each valve box shall be sufficient to permit the top of the box to be set flush with the established finished grade. In asphalt concrete pavements, the top of the box to be set 1/2-inch below finished grade. Asphalt concrete to be compacted 12 inches wide around the upper section for a depth of 12 inches below finished grade.

F. Valve boxes shall be set truly vertical and fully supported until sufficient backfill has been placed and compacted to ensure vertical alignment of the box.

2.06. HYDRANTS

A. All hydrants shall be of the compression or gate type conforming to the latest specifications of the ANSI/AWWA C502, and shall be of a make that has been adopted by the Owner as a standard.

B. Hydrants shall be of heavy, anti-freeze compression action type with positive automatic type drain.

C. All hydrants shall breakaway at ground level upon severe impact without flooding the area.

D. Hydrants shall be supplied with 6-inch mechanical joint inlet connection.

E. Hydrants shall have a minimum 5-inch diameter valve opening. They shall be equipped with two 2-1/2-inch hose nozzles and one 4-1/2-inch steamer nozzle. Both 2-1/2-inch hose nozzles shall be Syracuse Pipe Thread. The 4-1/2-inch steamer nozzle shall be National Standard Thread.

F. Operating nuts shall be 1-1/8-inch pentagon nuts.

G. Hydrant barrels shall be painted red

H. Caps shall be furnished with non-kinking chains.

I. Hydrants shall open counter-clockwise (left).

J. Hydrants shall be designed for 300# test pressure and 150# working pressure.

K. Hydrants shall be Kennedy K-81 D or approved equal.

L. Hydrant signs shall be minimum 4-inch by 6-inch heavy duty 18 gauge steel with baked enamel finish labeled with hydrant symbol in red with a white background. Signs shall be mounted on a 10 foot long green baked enamel U channel sign post. Sign and posts shall be installed 18 inches behind hydrants.

2.07. TAPPING SLEEVES AND VALVES

A. Tapping sleeves shall be compatible with the pipe encountered so that a watertight connection will be made.

B. Tapping sleeves shall be ductile iron construction with Type 304 stainless steel bolts and hardware. Sleeve body shall have an NPT test plug for hydrostatic testing. Sleeves shall have an outlet flange with dimensions and drilling that comply with ANSI B16.1, Class 125 and with MSS SP-60. Sleeve shall be rated for a maximum working pressure of 250 psi.

C. The sleeve shall be adequate to provide reinforcement of the pipe being tapped and protect this pipe against all strains resulting from either tapping the pipe or connecting to the pipe.

D. Tapping valves used shall conform to Article 2.03.

E. Tapping sleeves for this project shall be Model H-615 as manufactured by Mueller Company or equal.

F. Tapping valves shall be Kennedy Model C509 resilient seated wedge gate valve with flange x mechanical joint connections. No substitutes will be accepted.

G. Mechanical joint connection shall be provided with restraint gland.

H. The tapping contractor shall have a minimum of five years' experience in performing taps.

I. After the sleeve has been installed, but prior to making the tap, the sleeve shall be subjected to a hydrostatic test equal to the maximum line pressure. There shall be no observed leakage from the sleeve.

PART 3 EXECUTION

A. Contractor shall verify all existing conditions.

B. The drawings and specifications may contain information relating to conditions below the ground surface at the site of proposed work, but such information is furnished without guarantee as to it being complete or correct. The contractor shall assume all risk and responsibilities and shall complete the work in whatever manner and under whatever conditions he may encounter or create without extra cost to the owner. Location of existing underground facilities at or contiguous to the site is based upon information and data furnished to the engineer by owners of such underground facilities or others, and owner and engineer do not assume responsibility for the accuracy or completeness thereof.

C. The contractor shall perform exploratory excavations in advance of this work to verify the location, depth, size, and material of existing utilities which may interfere with the work to be performed under this contract. All damage to existing utilities shall be the contractor's cost to repair or replace.

D. Verify that trench cut, excavated base and pipe bedding are ready to receive pipe and that excavations and pipe bedding dimensions and elevations are as shown on drawings.

E. All pipe or fittings which have been damaged in transit or which are obviously deformed or refinished in any way shall be rejected, marked, and removed from the site of the work. Any pipe or fitting which the Owner suspects is improper for the job shall be temporarily rejected, marked, and set aside for subsequent investigation to determine its conformity with the specifications.

F. All pipe fittings and specials shall be carefully inspected in the field before lowering into the trench. Cracked, broken, warped, out-of-round, damaged pipe joints including damaged pipe lining or coatings or specials, as determined by the engineer, shall be culled out and not installed. Such rejected pipe shall be clearly tagged in such manner as not to deface or damage it, and the pipe shall then be removed from the job site by the contractor at his own expense.

G. All new and existing valve boxes, curb boxes, etc., shall be adjusted so that the cover is flush with the top of grade.

1. All valve boxes, curb boxes, etc., shall be left in such a way that the covers are easily removed and the boxes shall function in the manner in which they were intended.

2. All covers shall be cleaned and restored to their original condition, free from dirt, concrete, and asphalt.

3.02. PREPARATION

A. Prior to installing the foundation, trenches shall have all water moved and all work performed in a dry stable trench.

B. Flat-bottom trenches of required width shall be excavated to the necessary depth as required and maintained in accordance with Section 02317 - Trenching.

C. Prior to installing the pipe foundation material, trenches shall have all water removed and all work performed in a dry trench.

D. All pipes, fittings and specials which are to be installed in the open trench excavation shall be properly bedded in an uniformly supported on pipe foundations of the type specified in Section 02317 – Trenching, and shown on the drawings. In particular, stones 2 inches and larger shall be removed from the bearing surface of the pipe foundation.

E. Compaction methods include hand tamping with T-bars, flat heads, and shovel slicing as well as mechanical compactors.

F. The contractor shall perform his bedding operations with care to maintain line and grades.

3.03. LINES AND GRADES

A. The contractor shall furnish all labor, materials, surveying instruments, and tools to establish and maintain all lines and grades. The contractor shall have personnel on duty or on standby call, at all times, who are qualified to check line and grade of water mains as they are installed.

B. Easements, property, and other control lines necessary for locating the work are shown on the drawings.

C. The contractor shall carefully preserve bench marks, reference points and stakes established by the engineer or owner, and in case of willful or careless destruction by his own operations he will be charged with the resulting expense to reestablish such destroyed control data and shall be responsible for any mistakes or delay that may be caused by the unnecessary loss or disturbance of such control data.

3.04. TOLERANCES

A. Minimum depth of cover shall be maintained as shown on the Standard Details or as described herein.

3.05. INSTALLATION

A. The Contractor shall furnish slings, straps, and/or approved devices to provide satisfactory support of the valves or hydrants when lifted. Transportation from storage areas to the trench shall be restricted to operations which can cause no damaged to the coating or lining or castings.

B. The valves or hydrants shall not be dropped from trucks onto the ground or into the trench.

C. All valves shall be installed in accordance with the specifications for the pipe to which they are to be connected and as previously described for individual types of valves.

D. Joints of valves shall be made up in accordance with the Contract Drawings and/or as described under the appropriate pipe joint descriptions found in other sections of these specifications.

E. The valves shall be so located that they are accessible for operating purposes and shall bear no stresses due to loads from the adjacent pipe.

F. All valves shall be inspected before installation, and they shall be cleaned and well lubricated before being installed in the line.

G. Hydrants shall be set at locations specified on the Contract Drawings and shall be of such length that, with the frost ring at the ground surface grade, there shall be 5 feet of cover over the connecting pipe.

H. Hydrants shall be set so that the barrel is truly vertical, and shall be properly backfilled so that the barrel will remain truly vertical.

I. They shall be placed with 3 cubic feet of crushed stone pocket to provide drainage for the hydrant.

3.06. CONNECTIONS TO EXISTING PIPES

A. Connections to existing water mains using wet taps (tapping sleeve and valve) shall be provided where shown on the drawings.

B. Tapping sleeves and tapping valves shall be in accordance with Section 02511 - Water Valves and Hydrants.

C. Contractor shall verify outside dimension of existing water main prior to ordering tapping sleeves or couplings.

D. Coordinate shutdown of existing water mains (where permitted) with the owner. Provide proposed work sequence and timeline for owner and engineer review a minimum of five working days prior to proposed shutdown.

3.07. PRESSURE TESTING AND FLUSHING

A. Pressure testing and flushing of the water mains shall be performed in accordance with Section 02674 - Pressure Testing of Water Distribution Systems.

B. Any section of pipe that fails the pressure test shall be dug up and replaced or permanently repaired as approved by the engineer. All repairs and/or replacements shall be the contractor's cost. The replaced or repaired section shall then be retested.

3.08. DISINFECTION

A. Disinfection of water mains shall be performed in accordance with Section 02675 - Disinfection of Water Distribution Systems.

3.09. ENCASEMENT

A. Where shown on the drawings, pipes shall be encased in concrete; details and requirements for encasement of pipes are described in Section 02317 – Trenching, and shown on the drawings.

3.10. MAGNETIC PIPE MARKING TAPE

A. Magnetic pipe marking tape as manufactured by C. H. Hanson Products, Paul Potter Warning Tape, or approved equal shall be installed above all new water main.

B. Tape shall be 3 inches wide consisting of two (2) exterior plies of polyethylene with an aluminum alloy foil core.

C. Tape shall be blue color and labeled: “WATER” in black letters.

3.11. THRUST RESTRAINTS

A. Thrust restraints shall be installed at all changes in direction, changes in size, dead ends or other locations where shown or directed.

B. Valves shall be treated as a bulkhead condition and pipe joints shall be restrained on both sides of the valve.

C. Cast in place concrete used for thrust restraints shall have developed the required strength prior to testing of the water main.

D. When approved for use by Owner, tie rods and nuts for thrust restraints shall be of high tensile steel and shall have minimum yield strength of 70,000 psi.

E. Tie rods and nuts installed underground shall be coated with two coats of coal tar pitch preservative coating after installation.

F. Oil, grease, paint, or any coating which requires drying will not be acceptable.

G. All fire hydrant branches from the mainline tee to and including valve and hydrant shall be restrained.

H. All piping installed for interconnections shall be restrained.

3.12. CONCRETE THRUST BLOCKS

A. Refer to section 03001, Concrete.

B. Solid concrete blocks shall be used for proper blocking. Hollow concrete blocks or wooden blocking are not acceptable.

END OF SECTION

SECTION 02512

WATER SERVICES AND APPURTENANCES

PART 1 GENERAL

1.01. SECTION INCLUDES

A. Water service piping, fittings, and accessories

B. Connection to existing water mains

C. Water services to serve domestic or fire protection

D. Installation

1.02. REFERENCES AND STANDARDS

A. American Water Works Association

B. U.S. Environmental Protection Agency – Safe Drinking Water Act

C. National Sanitation Foundation - Standard 61

D. American National Standard Institute (ANSI)

E. ASTM B88 – Copper Pipe Type K

F. AWWA C800 Underground Service Line Valves and Fittings (with Type K Copper Tubing)

G. American Society for Testing Materials (ASTM)

1.03. RELATED SECTIONS

A. Section 01200 - SUBMITTALS

B. Section 01500 - CONSTRUCTION FACILITIES AND TEMPORARY CONTROLS

C. Section 01600 - RECORD DOCUMENTS

D. Section 02260 - PROTECTION OF EXISTING FACILITIES

E. Section 02316 - COMPACTION

F. Section 02317 – TRENCHING

G. Section 02511 - WATER VALVES AND HYDRANTS

H. Section 02674 - PRESSURE TESTING WATER DISTRIBUTION SYSTEMS

I. Section 02675 - DISINFECTION WATER DISTRIBUTION SYSTEMS

J. Section 03001 – CONCRETE

1.04. REGULATORY REQUIREMENTS

A. Conform to requirement of regulatory agencies having jurisdiction over work

B. Conform to permit requirements obtained by Owner and attached to these specifications

1.05. SUBMITTALS

A. Submit under provisions of Section 01200.

B. Product Data - Provide data describing conformance to ANSI/AWWA/ASTM codes, materials, sizes, class, dimensions, joint type, fittings, and pipe accessories

C. Manufacturer's Installation Instructions - Indicate special procedures required to install products specified.

D. Results of shop tests, if required.

E. Manufacturer's Certificate - Certify that products meet or exceed specified requirements.

1.06. FIELD MEASUREMENTS

A. Prior to start of construction where ordered, verify by exploratory excavations that existing underground utility locations and elevations are as shown on the Drawings or to confirm marked location and elevation of underground utilities by the organization identified in Section 02260.

B. Where connections are to be made to existing pipes, confirm the type of material and the outside dimensions of pipes

PART 2 PRODUCTS

2.01. MATERIALS

A. All valves shall be provided with hub, spigot, mechanical joint, flange or screwed ends as described herein.

1. Valves, 2 inches in nominal diameter and smaller shall be all brass or bronze.

2. Valves over 2 inches in nominal diameter shall be iron bodied, fully brass or bronze mounted

2.02. CORPORATION STOPS

A. Corporation stops shall be of brass or bronze construction and shall be installed by the wet method, connecting service line to water mains, with water main at or near operating pressure when corporation stops are installed.

B. Corporation stops shall be installed by experienced tradesmen using the proper tools especially designed for a wet-tap connection.

C. Corporation stops shall be installed in complete accordance with the pipe manufacturer's recommendations for tapping and installing corporation stops.

D. Saddles shall be used where recommended by the pipe manufacturer or as ordered by the Owner, and such saddles shall be approved for use with the pipe by the pipe manufacturer. Threads of service saddle shall be compatible with the corporation stop specified. Saddles shall be of double strap design.

E. Contractor shall verify diameter and pipe material ahead of time. Saddles shall be made of either brass or bronze and shall be as manufactured by Mueller Company, Ford Meter Box Company, or equal. All saddles shall be field wrapped with a polyethylene sheet.

F. Where saddles are used, or for other reasons the main cannot be tapped wet, the Owner may approve visual inspection of such connections after they have been pressurized.

G. Buried corporation stops shall be Model H-15000 as manufactured by Mueller Company, or Model F-600 as manufactured by Ford Meter Box Company, or equal. Corporation stops located within pits or vaults shall be Model H-10045 or H-9992 with I.P. outlet as manufactured by Mueller Company, or Model F800 or F1600 with I.P. outlet as manufactured by Ford Meter Box Company, or equal.

2.03. CURB STOPS

A. Curb stops shall be of brass or bronze construction and two rubberized O-ring seals to provide pressure-tight seal. Curb stops shall be Figure H-15204 as manufactured by Mueller-Oriseal, B22 as manufactured by Ford Meter Box Company, Hayes, Nuseal, or equal.

2.04. CURB BOX

A. Curb boxes shall be 2-1/2-inch shaft size two-piece screw type. They shall be adjustable from 48-inch to 72-inch. Curb boxes shall be constructed of cast iron and thoroughly coated with two coats of asphaltum varnish.

B. Curb box top section shall include a water cover which shall be of the “old style” with the word “water” cast into it and shall include a brass pentagon screw.

C. Curb boxes shall be as manufactured by Ford Meter Box Company, Mueller Company, or equal

2.05. COOPER SERVICE PIPING (SERVICE SIZE 1-INCH TO 2-INCH)

A. Copper Pipe - ASTM B-88, Type K material for underground services 1 inch to 2 inch.

B. Fitting shall be flare-type fittings in conformance with AWWA C800.

C. Joints - Copper joints shall be thoroughly cleaned and the end of pipe uniformly flared by a suitable tool to the bevel of the fitting used. Wrenches shall be applied to the bodies of the fittings where the joint is being made and, in no case to a joint previously made.

2.06. DUCTILE IRON WATER SERVICE (2-INCH AND GREATER)

A. All ductile Iron water services shall comply with Specification 02510 - Water Distribution Piping and Appurtenances.

2.07. IDENTIFICATION.

A. Each pipe length and fitting shall be clearly marked with:

1. Manufacturer's name and trademark.

2. Nominal pipe size and class.

3. Material Designation.

PART 3 EXECUTION

3.01. EXAMINATION

A. Contractor shall verify all existing conditions.

B. The drawings and specifications may contain information relating to conditions below the ground surface at the site of proposed work, but such information is furnished without guarantee as to it being complete or correct. The Contractor shall assume all risk and responsibilities and shall complete the work in whatever manner and under whatever conditions he may encounter or create without extra cost to the Owner. Location of existing underground facilities at or contiguous to the site is based upon information and data furnished to the Owner by owners of such underground facilities or others, and Owner does not assume responsibility for the accuracy or completeness thereof. The Contractor shall perform exploratory excavations in advance of this work to verify the location, depth, size, and material of existing utilities which may interfere with the work to be performed under this contract. All damage to existing utilities shall be the Contractor's cost to repair or replace.

C. Verify that trench cut, excavated base and pipe bedding are ready to receive pipe and that excavations and pipe bedding dimensions and elevations are as shown on Drawings.

D. All pipe or fittings which have been damaged in transit or which are obviously deformed or refinished in any way shall be rejected, marked, and removed from the site of the work. Any pipe or fitting which the Owner suspects is improper for the job shall be temporarily rejected, marked, and set aside for subsequent investigation to determine its conformity with the specifications.

E. All pipe fittings and specials shall be carefully inspected in the field before lowering into the trench. Cracked, broken, warped, out-of-round, damaged pipe joints including damaged pipe lining or coatings or specials, as determined by the Owner, shall be culled out and not installed. Such rejected pipe shall be clearly tagged in such manner as not to deface or damage it, and the pipe shall then be removed from the job site by the Contractor at his own expense.

3.02. PREPARATION

A. The Contractor shall have on the job site with each pipe laying crew, all the proper tools, gauges, pipe cutters, lubricants, etc. to handle, cut and join the pipe.

B. Flat-bottom trenches of required width shall be excavated to the necessary depth as required and maintained in accordance with Section 02317 - Trenching.

C. Prior to installing the pipe foundation material, trenches shall have all water removed and all work performed in a dry trench.

D. All pipes, fittings and specials which are to be installed in the open trench excavation shall be properly bedded in a uniformly supported on pipe foundations of the type specified in Section

02317 and shown on the Drawings. In particular, stones 2 inches and larger shall be removed from the bearing surface of the pipe foundation.

E. Pipe foundation bedding material shall be spread in maximum 8-inch layers and each layer shall be compacted up to the spring line of the pipe.

F. Compaction methods include hand tamping with T-bars, flat heads, and shovel slicing as well as mechanical compactors.

G. The Contractor shall perform his bedding operations with care to maintain line and grades.

H. Suitable holes or depressions shall be provided in the pipe bedding to permit adequate bedding of bells, couplings, or similar pipe projections.

3.03. INSTALLATION

A. When shown on the Contract Drawings, or ordered by the Owner, water services shall be furnished and installed to the extent shown or ordered by the Owner. Means and methods used must meet all applicable codes, and the Owner has final approval of means and methods used.

B. Corporations shall be installed in the “run” of the water main at the required locations or, if the pipe is required to be tapped to receive special saddles, such fittings shall be located at the required locations and installed as specified, and in a manner satisfactory to the Owner. The requirements for proper pipe foundation, bedding, joint assembly, etc., shall be observed when installing the water services. All corporation installations shall be “wet” taps.

C. After installation, water services shall be thoroughly flushed and shall not be backfilled until the installation has been observed and approved by the Owner and their location has been measured and recorded by the Contractor on a standard form (see Form #158 at end of this Section) provided by the Owner, and such record shall then be transmitted to the Owner with the record drawings.

D. Contractor shall repair any indoor plumbing problems within residence as a result of his work performed. A licensed plumber shall make all necessary repairs and all work shall be the Contractor’s cost

Contract No._____

Contractor:_____

CHECKLIST FOR WATER SERVICE CONNECTION
(To Be Completed by Contractor)

Date:_____

Street:_____ House No.:_____

Name:_____

Describe Location if No House Number:_____

ITEM	YES	NO	LOCATION SKETCH
1. Connection to Water Main:			
(a) Tapped directly into Pipe Barrel			
(b) Saddle			
2. Service Pipe Installed:			
(a) Using copper pipe			
(b) Curb stop installed			
(c) Curb box installed			
3. Connection to House Line:			
4. Diameter of Service Connection:			
5. Diameter of Water Main:			
6. Depth of Curb Stop:			
7. Service Ties:			

INSTRUCTIONS:
1. Complete every space accurately.
2. Show house, street, and water main.
3. Show two permanent radius ties to curb stop.
4. Show North Arrow.
5. Show diameter of Main.
6. Copies for Owner.

CHECKED AND APPROVED: _____

END OF SECTION

SECTION 02674

PRESSURE TESTING WATER DISTRIBUTION SYSTEMS

PART 1 GENERAL

1.01. SECTION INCLUDES

A. Work Specified

B. Testing and disinfection of all pressure piping for leakage as specified.

C. The CONTRACTOR shall furnish all labor, equipment, test connections, vents, water and materials necessary for carrying out the pressure and leakage tests as specified and required.

D. The work specified shall include all labor, material, equipment, services and incidentals necessary to fill, clean, chlorinate, flush, and test all pipelines which will carry or hold potable water.

1.02. RELATED WORK SPECIFIED ELSEWHERE

A. Section 02510 – WATER DISTRIBUTION PIPING AND APPURTENANCES

B. Section 02511 – WATER VALVES AND HYDRANTS

1.03. DESCRIPTION

A. Permission shall be obtained from the OWNER of the water system before the use of water from any existing system. The CONTRACTOR shall:

B. Conform to the requirements of the OWNER.

C. Pay all costs connected with the taking or use of water for any retesting.

D. The CONTRACTOR shall provide written notice to the Owner at least three working days in advance of testing and disinfection.

E. All work under this section shall be performed in the presence of the Owner. A representative of the public health authority having jurisdiction must also be present, as required.

1.04. QUALITY ASSURANCE

A. Reference Standards

1. AWWA C104, Cement-Mortar Lining for Ductile Iron Pipe and Fittings for Water
2. AWWA C502, Standard for Dry-Barrel Fire Hydrants
3. AWWA C504, Standard for Rubber Seated Butterfly Valves
4. AWWA C600, Standard for Installation of Ductile Iron Watermains and Construction
5. NSF/ANSI Standard 60 and 61 (as applicable)
6. Standard Methods for the Examination of Water and Wastewater, latest edition

7. 1996 Safe Drinking Water Act

1.05. SUBMITTALS

A. The CONTRACTOR shall submit proposed materials, methods, and operations regarding testing and disinfection to the OWNER for review prior to the start of testing.

B. CONTRACTOR must provide a sketch to the OWNER of the sampling locations identifying at minimum the following:

1. Street names,
2. North arrow,
3. Sampling locations,
4. House numbers of nearest buildings to sampling locations.
5. Other distinguishable landmarks,
6. Any other information as requested by OWNER, AUTHORITY, or County Health Department.

C. The CONTRACTOR shall submit certification that all backflow preventers (Reduced Pressure Zone attachments) and pressure gauges have been tested and certified within the last year.

D. For flushing operations, OWNER shall supply calculations identifying that a minimum 3.0 ft/sec scour velocity has been achieved in the new waterline and that three pipe volumes have passed through it.

E. OWNER shall provide pressure testing and leakage test results on the Syracuse Water Department Pressure Test/Leakage Test form.

PART 2 PRODUCTS

2.01. MATERIALS

A. All products must be suitable for use in a potable water system and NSF-60 certified. All piping, valves, etc. shall be NSF-61 certified.

B. Chlorination shall be by the use of a solution of sodium hypochlorite contained in the pipe or structure as specified. The use of calcium hypochlorite in powdered, granular, or tablet form, shall not be allowed.

PART 3 EXECUTION

3.01. TESTS ON PRESSURE PIPING FOR POTABLE WATER A. GENERAL

A. Flush, test and disinfect prior to connection to existing watermains as specified below, except as otherwise authorized by the Owner.

B. The length of piping and sections included in the tests shall meet the approval of the Owner; however, the length shall not exceed 2,000 feet in any case. Pressure test of pipe section shall be from valve to valve regardless of watermain size.

C. Notify the Owner 72 hours in advance of testing.

D. Equipment in or attached to the pipes being tested shall be protected. Any damage to such equipment during the test shall be repaired by the Contractor at his expense.

E. Conduct all tests per AWWA C-600 and C-651, latest editions in the presence of the Owner. Repeat tests in the presence of local authorities having jurisdiction if required by them.

F. Contractor shall have sufficient personnel at the site for the entire duration of all tests.

G. When piping is to be insulated or concealed in a structure, tests shall be made before the pipe is covered.

H. Provide outlets to flush line, expel air, and perform specified tests.

I. Where connections to existing lines are called for only one such connection will be allowed.

J. All fittings, hydrants and appurtenances must be properly braced and harnessed before the pressure is applied. Thrust restraining devices which will become a part of the system must also be tested at the test pressure.

K. When testing absorbent pipe materials such as cement or concrete, the pipeline shall be filled with water at least 24 hours before the test is made.

L. The Contractor must supply all materials and manpower to perform the tests as specified herein.

M. Testing and disinfection shall be acceptable and approved by the agency of jurisdiction before another connection is made.

3.02. INITIAL FLUSHING

A. Contractor shall fill and flush new main to remove dirt and miscellaneous debris from the inside of the watermain.

B. Contractor is responsible for removing all entrapped air during flushing.

C. Flushing must have sufficient flowrate to achieve a fluid velocity of 3.0 feet per second inside the waterline.

D. A minimum 2" tap is required for proper flushing of all watermains having a diameter of 8 inches or less, however, multiple taps or larger taps may be required. Owner shall be responsible for determining necessary connections and providing calculations verifying flushing conditions are met.

E. Refer to AWWA C651, for number of taps required to obtain the minimum 3.0 feet per second flow velocity in all pipes.

F. Contractor is responsible for providing a water source for flushing. With the permission of the Owner, an existing watermain may be used as a water source, however, the following restrictions apply:

1. The Contractor is not allowed to operate any valves or hydrants or operate any components which belong to the Owner.
2. If water is drawn from the existing system, an appropriate backwater preventer such as a Reduced-Pressure Zone (RPZ) device must be used. The RPZ must be tested within one (1) year and approved prior to usage.
3. Water from flushing procedures must be disposed of properly. Water may be piped or gravity-fed to an existing storm sewer with the Owner's permission if proper erosion control methods to minimize sediment build-up are used. Discharge of water into a roadway or into a parking lot area is strictly prohibited. Water discharging operations shall not cause damage to any public or private property.

G. Contractor shall partially open and close valves and hydrants several times under expected line pressure to flush foreign material out of the valves and hydrants.

H. Flushing shall continue until three pipe volumes have passed through the new waterline and the water appears sediment-free.

3.03. PRESSURE TEST

A. Pressure test apparatus must be installed as shown on the Drawings

B. Test pressure shall be as specified in Section 02510 – Water Distribution Piping and Appurtenances at the lowest point in the line.

C. Test pressure shall be held on the piping for a period of at least 2 hours, unless a longer period is requested by the Owner, or Authority. Pressure should not fluctuate by more than 5 psi during testing.

D. Pressure gauge must be in good working condition and must be demonstrated to be accurate to the Owner prior to any testing.

E. Gauge must have proper labeling to allow Owner to accurately distinguish the maximum allowable 5 psi change in pressure. Gauge must have markings at no greater than 2 psi increments to allow accurate readings.

F. Owner is responsible for reading the gauge and recording the test results he/she witnesses. Results obtained by the Owner are considered final, and not subject to discussion by the Contractor.

G. Owner may tap pressure gauge at each reading to ensure needle is measuring pressure accurately.

H. The Owner reserves the right to read the pressure gauge and record the test results for those lines considered suspect or for potentially inaccurate result recording.

I. Owner shall record pressure at 15 or 30 minute intervals to help determine if the pressure loss is stabilizing.

J. The Contractor will inform the Owner when to begin the test.

K. If the pressure drop is greater than 5 psi in 2 hours, or if the Owner believes the line is suspect, the Contractor shall explore for the cause of the excessive leakage and after

repairs have been made, the line shall be retested. This procedure shall be repeated until the pressure loss is less than the maximum allowable and the Owner is satisfied.

L. If the pressure drop is 3 psi or greater but less than 5 psi in 2 hours, the Contractor shall continue the test for another 2 hours. If the pressure drop over the 4 hour period is 5 psi or greater, the test failed and must be repeated after the cause of the leakage is explored and the necessary repairs have been made

M. The Owner shall make a preliminary determination if the test passes or fails based on the pressure and volume losses recorded during testing.

N. After each test, the Contractor must demonstrate that the test apparatus, including the pressure gauge, is fully functional and accurate. Inaccurate gauges or non-satisfactory equipment will be grounds for test failure, regardless of test results. Contractor will resupply proper equipment and retest, at his expense.

O. The pressure loss recorded over the 2 or 4-hour test must be acceptable to the County Health Department and Authority for final hydrostatic testing approval to be given.

P. At the end of the test, the pressure shall be increased to the starting pressure, so that the leakage test data is acquired.

3.04. LEAKAGE TEST

A. The leakage test shall be conducted concurrently with the pressure test.

B. The rate of leakage shall be determined at 15-minute intervals by means of volumetric measurement of the makeup water added to maintain the test pressure. The test shall proceed until the rate of leakage has stabilized or is decreasing below an allowable value, for three consecutive 15-minute intervals. After this, the test pressure shall be maintained for at least another 15 minutes.

C. At the completion of the test the pressure shall be released at the furthermost point from the point of application.

D. All exposed piping shall be examined during the test and all leaks, defective material or joints shall be repaired or replaced before repeating the tests.

E. The leakage for pressure pipelines shall not exceed the following allowable rates in gallons per hour per 1000 feet of pipe at the test pressure specified in Section 02510 - Water Distribution Piping and Appurtenances.

F. 75% of allowable leakage per AWWA C600-17.

G. Regardless of the above allowables, any visible leaks shall be permanently stopped.

H. The Contractor shall provide a meter certified within the last year or a source-water tank/barrel of small enough cross section so that measurable changes in water depth can be accurately recorded. A two hour test is permitted for circular tanks/barrels of 15 inches in diameter or less. A four hour test is required for circular tanks/barrels greater than 15 inches in diameter. If a tank of non-circular cross section or irregular shape is used, and the change in water depth cannot be properly measured, the Owner may require the test

to be run more than 2 hours until an accurate depth change can be recorded and the Owner is satisfied with the results.

I. The leakage volume recorded over the 2 or 4-hour test must be acceptable to the Onondaga County Health Department and Owner for final waterline approval to be given.

3.05. APPROVAL

A. The Owner shall submit the Waterline Installation Complete Works Approval Report(s) to the Onondaga County Department of Health for review and processing.

B. Once approval is given, after reconnecting the proposed piping to the existing piping, the Contractor shall slowly refill the watermain with water and allow it to pressurize so that the Owner may inspect the connections and/or other piping.

C. The Contractor shall, at his expense, correct any observed defects to the satisfaction of the Owner.

END OF SECTION

FLUSHING AND TESTING OF WATER MAIN
TABULATION SHEET

Project _____

Location _____

Contractor _____

FLUSHING

Date _____ Weather _____ Temperature _____

Length Flushed _____LF Pipe Diameter _____

Main Flushed _____ hours _____ minutes at _____ gal/min

Flushed Through _____ Hydrant _____ inch tap

Flow Measurement Method _____

WATER PRESSURE AND LEAKAGE TESTING

Date _____ Weather _____ Temperature _____

Length Tested _____LF Pipe Diameter _____

Time Started _____ Time Finished _____ Elapsed Time _____

Starting Pressure _____psi Finish Pressure _____psi

Pressure Drop _____psi Water Added _____ gal/hr Allowable Loss _____gal/hr*

Formula: $L = \frac{SD\sqrt{P}}{148{,}000}$

L = Allowable Loss (gal/hr) S = Length of Pipe Being Tested (ft.)
D= Diameter of Pipe (in.) P = Average Test Pressure (psi)

Water Added < Allowable Loss? If yes, PASS ___ If no, FAIL ___

Owner's Representative _____ Date _____

Contractor's Representative _____ Date _____

*Refer to AWWA C600 and AWWA C600 Table 4.A (Table 4.A located on next page)

Table 4.A: Hydrostatic Testing Allowance per 1,000 ft of pipeline* – gph

Avg. Test Pressure *psi*	Nominal Pipe Diameter—*in.*													
	4	6	8	10	12	14	16	18	20	24	30	36	42	48
450	0.57	0.86	1.15	1.43	1.72	2.01	2.29	2.58	2.87	3.44	4.30	5.16	6.02	6.88
400	0.54	0.81	1.08	1.35	1.62	1.89	2.16	2.43	2.70	3.24	4.05	4.86	5.68	6.49
350	0.51	0.76	1.01	1.26	1.52	1.77	2.02	2.28	2.53	3.03	3.79	4.55	5.31	6.07
300	0.47	0.70	0.94	1.17	1.40	1.64	1.87	2.11	2.34	2.81	3.51	4.21	4.92	5.62
275	0.45	0.67	0.90	1.12	1.34	1.57	1.79	2.02	2.24	2.69	3.36	4.03	4.71	5.38
250	0.43	0.64	0.85	1.07	1.28	1.50	1.71	1.92	2.14	2.56	3.21	3.85	4.49	5.13
225	0.41	0.61	0.81	1.01	1.22	1.42	1.62	1.82	2.03	2.43	3.04	3.65	4.26	4.86
200	0.38	0.57	0.76	0.96	1.15	1.34	1.53	1.72	1.91	2.29	2.87	3.44	4.01	4.59
175	0.36	0.54	0.72	0.89	1.07	1.25	1.43	1.61	1.79	2.15	2.68	3.22	3.75	4.29
150	0.33	0.50	0.66	0.83	0.99	1.16	1.32	1.49	1.66	1.99	2.48	2.98	3.48	3.97
125	0.30	0.45	0.60	0.76	0.91	1.06	1.21	1.36	1.51	1.81	2.27	2.72	3.17	3.63
100	0.27	0.41	0.54	0.68	0.81	0.95	1.08	1.22	1.35	1.62	2.03	2.43	2.84	3.24

*If the pipeline under test contains sections of various diameters, the allowable leakage will be the sum of the computed leakage for each size.

SECTION 02675

DISINFECTION OF WATER DISTRIBUTION SYSTEMS

PART 1. GENERAL

1.01. SECTION INCLUDES

A. Work Specified

B. Disinfection of all pressure piping for leakage as specified.

C. The Contractor shall furnish all labor, equipment, test connections, vents, water and materials necessary for carrying out the pressure and leakage tests as specified and required.

D. The work specified shall include all labor, material, equipment, services and incidentals necessary to fill, clean, chlorinate, flush, and test all pipelines which will carry or hold potable water.

1.02. RELATED WORK SPECIFIED ELSEWHERE

A. Section 02510 - WATER DISTRIBUTION PIPING AND APPURTENANCES

B. Section 02511 - WATER VALVES AND HYDRANTS

1.03. DESCRIPTION

A. Permission shall be obtained from the Owner of the water system before the use of water from any existing system. The Contractor shall:

B. Conform to the requirements of the Owner.

C. Pay all costs connected with the taking or use of water for any retesting.

D. The Contractor shall provide written notice to the Owner at least three working days in advance of testing and disinfection.

E. All work under this section shall be performed in the presence of the Owner. A representative of the public health authority having jurisdiction must also be present, as required.

F. Chlorination shall be scheduled such that sampling and flushing will be performed during normal business hours.

1.04. QUALITY ASSURANCE

A. Reference Standards

1. AWWA B300, Standard for Hypochlorites
2. AWWA B301, Standard for Liquid Chlorine
3. AWWA C104, Cement-Mortar Lining for Ductile Iron Pipe and Fittings for Water
4. AWWA C502, Standard for Dry-Barrel Fire Hydrants
5. AWWA C504, Standard for Rubber Seated Butterfly Valves
6. AWWA C600, Standard for Installation of Ductile Iron Watermains and Construction

7. AWWA C651-14, Standard for Disinfecting Water Mains
8. NSF/ANSI Standard 60 and 61 (as applicable)
9. Standard Methods for the Examination of Water and Wastewater, latest edition
10. 1996 Safe Drinking Water Act

1.05. SUBMITTALS

A. The Contractor shall submit proposed materials, methods, and operations regarding disinfection to the Owner for review prior to the start of testing.

B. Contractor must provide a sketch to the Owner of the sampling locations identifying at minimum the following:

1. Street names,
2. North arrow,
3. Sampling locations,
4. House numbers of nearest buildings to sampling locations.
5. Other distinguishable landmarks,
6. Any other information as requested by Owner or Onondaga County Health Department.

C. The Contractor shall submit certification that all backflow preventers (Reduced Pressure Zone attachments) and pressure gauges have been tested and certified within the last year.

D. Qualifications of laboratory analyzing biological samples shall be New York State ELAP certified.

E. Chain-of-Custody forms are to be furnished for all biological samples taken.

F. For flushing operations, Owner shall supply calculations identifying that a minimum 3.0 ft/sec scour velocity has been achieved in the new waterline and that three pipe volumes have passed through it.

G. Owner shall provide disinfection test results on the Syracuse Water Department disinfection form.

PART 2. PRODUCTS

2.01. MATERIALS

A. All products must be suitable for use in a potable water system and NSF-60 certified. All piping, valves, etc. shall be NSF-61 certified.

B. Chlorination shall be by the use of a solution of sodium hypochlorite contained in the pipe or structure as specified. The use of calcium hypochlorite in powdered, granular, or tablet form, shall not be allowed.

PART 3. EXECUTION

3.01. INITIAL FLUSHING

A. Contractor shall fill and flush new main to remove dirt and miscellaneous debris from the inside of the watermain.

B. Contractor is responsible for removing all entrapped air during flushing.

C. Flushing must have sufficient flowrate to achieve a fluid velocity of 3.0 feet per second inside the waterline.

D. A minimum 2" tap is required for proper flushing of all watermains having

E. Diameter of 8 inches or less, however, multiple taps or larger taps may be required. Owner shall be responsible for determining necessary connections and providing calculations verifying flushing conditions are met.

F. Refer to AWWA C651, for number of taps required to obtain the minimum 3.0 feet per second flow velocity in all pipes.

G. Contractor is responsible for providing a water source for flushing. With the permission of the Owner, an existing watermain may be used as a water source, however, the following restrictions apply:

1. The Contractor is not allowed to operate any valves or hydrants or operate any components which belong to the Owner.
2. If water is drawn from the existing system, an appropriate backwater preventer such as a Reduced-Pressure Zone (RPZ) device must be used. The RPZ must be tested within one (1) year and approved prior to usage.
3. Water from flushing procedures must be disposed of properly. Water may be piped or gravity-fed to an existing storm sewer with the Owner’s permission if proper erosion control methods to minimize sediment build-up are used. Discharge of water into a roadway or into a parking lot area is strictly prohibited. Water discharging operations shall not cause damage to any public or private property.

H. Contractor shall partially open and close valves and hydrants several times under expected line pressure to flush foreign material out of the valves and hydrants.

I. Flushing shall continue until three pipe volumes have passed through the new waterline and the water appears sediment-free.

3.02. DISINFECTION

A. Before disinfection, the line shall be cleaned and flushed with clean water as defined in the Initial Flushing section. Contractor shall provide outlets as required.

B. The chlorine solution shall be admitted to pipelines through corporation stops placed in the horizontal axis of the pipe, to structures by means of tubing extending directly into the structure or other approved methods.

C. Contractor shall install 2-inch saddles on existing and proposed mains and run 2-inch Type K copper tubing with backflow prevention device to allow for addition of chlorinated water. The rate of chlorine solution flow shall be in such proportion to the rate of water entering the pipe or structure that the resulting free chlorine residual shall be between 50 and 100 milligrams per liter (mg/l). Concentrations over 100 mg/l shall not be allowed to enter the piping system.

D. The placement of chlorine powder or tablets inside the pipe during installation as a means of disinfection will not be allowed.

E. The proposed piping shall be tested in all respects, prior to connecting the second end of the pipe to the existing system and prior to installing the annular fill at casing pipes.

F. All valves to existing mains must be closed during the chlorination process. Contractor must flush the proposed main through a backflow preventer such as a Reduced Pressure Zone (RPZ) and 2-inch copper until chlorine residual at the opposite end reaches 50 mg/l. All valves to the existing water network are to remain closed until this level is reached. While the chlorinated water is being added, all appurtenances on the main shall be operated so as to completely disinfect the new work. The operation shall be repeated as necessary to provide complete disinfection.

G. Chlorinated water from hydrants and taps must be properly collected and disposed of by the Contractor. Discharge of chlorinated water into the existing storm sewer or a natural water body shall not be allowed.

H. The chlorine treated water shall be retained in the pipe or structure at least 24 hours, unless otherwise directed. During the retention period all valves and hydrants within the treated sections shall be operated.

I. The chlorine residual shall be not less than 25 mg/l at any point in the pipe or structure at the end of the retention period. Contractor shall immediately perform final flushing to reduce the retention time high levels of chlorinated water.

J. When making repairs to or when specified, structures and portions of pipelines shall be chlorinated by a concentrated chlorine solution containing between 200 mg/l and 300 mg/l of free chlorine. The solution shall be applied with a brush or sprayed on the entire inner surface of the empty pipes or structures. The surfaces disinfected shall remain in contact with the strong chlorine solution for at least 30 minutes.

K. The Contractor must use an approved test method, as defined in AWWA C651 and Standard Methods for the Examination of Water and Wastewater, to determine chlorine levels. Test strips and test kits will be allowed for testing chlorine levels if the kit is less than six months old, in the original bottle, is not past the expiration date, and has a color coded scale on the side with legible concentrations defined. Owner reserves the right to reject test results if the test strip or kit is suspect. Sending samples to an approved laboratory is also acceptable.

3.03. FINAL FLUSHING

A. Upon completion of each disinfecting operation, the Contractor will be required to empty the contents of the pipe into a tank truck. Dumping into a sewer will only be allowed with approval from the local governing body. In no instance will chlorinated testing or flushing water be

emptied onto the roadways, in ditches, culverts, streams, wetlands, or any other natural water body.

B. Final flushing will continue until such time as the chlorine residual is between 0.5 and 1.2 mg/l.

C. Prior to discharging into storm or sanitary sewer systems, and with the written approval of the municipality, the Contractor shall use a reducing agent (such as sodium thiosulfate) to neutralize any chlorine residual. Contractor shall prove to the Owner that the water has been properly neutralized prior to discharge using an appropriate testing method.

3.04. BACTERIOLOGICAL TESTING

A. After disinfection and final flushing, a representative of the laboratory hired by the Contractor shall, in the presence of the Owner, take two bacteriological samples from sampling points at maximum 1,000-foot intervals along the waterline, at every branch off the main line, and at each end of the test section (one immediately after final flushing and a second one after 24 hours) for testing by an ELAP certified laboratory in accordance with the latest Health Department requirements.

B. Should acceptable results not occur after these two consecutive tests, the Owner shall, at his expense, repeat the disinfection procedure until safe results are obtained.

C. All precautions shall be taken to maintain dry and sanitary conditions and to prevent contamination of any piping, at the Contractor's expense.

D. If, in the opinion of the Owner, contamination has occurred, the Contractor shall repeat the disinfection and bacteriological testing at his cost and expense.

E. Test results from the laboratory shall be sent directly to the Owner. Test results sent through the Contractor shall not be considered.

F. Bacteriological test results shall expire 30 calendar days after the samples are taken. After 30 calendar days, the Contractor shall be required to repeat the process, taking two sets of samples and submitting results for review.

G. As per AWWA C651-14 standards, the limit for pipe installed without bacteriological samples being taken is 20 linear feet.

3.05. APPROVAL

A. The Owner shall submit the Waterline Installation Complete Works Approval Report(s) to the Onondaga County Department of Health for review and processing.

B. Once approval is given, after reconnecting the proposed piping to the existing piping, the Contractor shall slowly refill the watermain with water and allow it to pressurize so that the Owner may inspect the connections and/or other piping.

C. The Contractor shall, at his expense, correct any observed defects to the satisfaction of the Owner.

END OF SECTION

DISINFECTION, TESTING, AND FLUSHING OF WATER MAINS
TABULATION SHEET

Project _____

Location _____

Contractor _____

Date _____ Weather _____ Temperature _____

Length Disinfected _____LF Pipe Diameter _____

Discharge Rate _____gal/min Hypochlorite Solution Strength _____

Initial Chlorine Residual (end of line) _____mg/L Time _____

24 Hour Chlorine Residual (end of line) _____mg/L Time _____

Residual Measurement Method _____

Flushing Rate _____gal/min Flushing Duration _____ Date_____

Bacteria Sample Location #1 _____ Time & Date _____

Bacteria Sample Location #2 _____ Time & Date _____

Bacteria Sample Location #3 _____ Time & Date _____

Did Bacteria Sample Pass or Fail Total Coliform Requirements? _____

Main Ready for Service Date _____ Time_____

Main Put into Service Date _____ Time_____

Formula for calculating required amount of sodium hypochlorite

$$Gallons\ of\ sodium\ hypochlorite\ required = \frac{Required\ ppm\ chlorine\ X\ Volume\ of\ pipe\ in\ gal}{\%\ of\ chlorine\ used\ X\ 10{,}000}$$

Owner's Representative _____ Date _____

Contractor's Representative _____ Date _____

HOT BOX® ALUMINUM DROP OVER ENCLOSURES

Hubbell Hot Box aluminum drop overs make it easy to provide premium protection for 3/4" - 2" pipe sizes. The addition of these sizes round out the legacy product offering which provides coverage for up to 10" pipe sizes. These smaller drop over sizes still offer the same quality and dependability as their larger counterparts.

Trusted since 1986 and requested by name, Hot Box enclosures are built with legacy quality and performance continuing to exceed your expectations.

FEATURES AND BENEFITS

- Protects equipment from freezing temperatures
- Riveted construction providing superior strength and durability
- Side located drain ports allow for field installation of custom penetrations
- Stucco embossed finish allows for longer lasting visual appeal hiding any imperfections as a result of the elements
- Unheated and heated units available. Heated units are equipped with heat trace tape providing long term performance and safety
- Standard aluminum, green and federal brown (mill finish) colors available
- Quick and easy installation
- ASSE 1060 certified

Catalog Part Number	Model Number	Inside Width (in)	Inside Length (in)	Inside Height (in)	Heat	Weight #
HJ013026023	AEZ.75H	13	26	23	90W Heat Trace Tape	30
HJ013038026	AEZ1SH	13	38	26	90W Heat Trace Tape	34
HJ015047028	AEZ2SH	15	47	28	90W Heat Trace Tape	38
LJ013026023	AEZ.75L	13	26	23	Unheated	29
LJ013038026	AEZ1SL	13	38	26	Unheated	33
LJ015047028	AEZ2SL	15	47	28	Unheated	37

For product inquiries, please contact waterhlc@hubbell.com or call 1-800-346-3061

©2018 Hubbell Incorporated.
Because Hubbell has a policy of continuous product improvement, we reserve the right to change design and specifications without notice.
Printed in the U.S.A. | SF_07_127E

hubbellpowersystems.com

Hot Box® Sectionalized Aluminum

BACKFLOW PREVENTION ASSEMBLY ENCLOSURE
SPECIFICATION

GENERAL

1.1 WORK INCLUDED

A. Provide and install manufactured backflow prevention assembly enclosure.

1.2 QUALITY ASSURANCE

A. Qualifications: The backflow prevention assembly enclosure manufacturer shall be a company specializing in the manufacture of backflow prevention assembly enclosures with at least **30** years of successful experience designing and selling enclosures to various customers in different climatic regions.

1.3 STORAGE AND HANDLING

A. Store products in shipping containers and maintain in dry place until installation.

1.4 ACCEPTABLE MANUFACTURERS

A. **Hot Box®** or Engineer approved equal.

1.5 REFERENCES

A. ASSE 1060-Performance Requirements for Outdoor Enclosures for Backflow Prevention assemblies.

B. ASTM B209.

PRODUCTS

2.1 SECTIONALIZED ALUMINUM ENCLOSURES

A. Enclosure shall be factory assembled with tongue and grooved sections that slide together and are then secured to the concrete pad with the supplied wedge anchors.

B. Access panels have a four point locking system with pad lockable handle and are completely removable.

C. Drain ports are sized for full port backflow discharge and are designed for a one way operation allowing backflow discharge but not allowing wind, debris and small animals to enter the enclosure.

D. Standard enclosures shall be designed to support a minimum vertical load of 100lb/sf.

E. Standard enclosures up to 36”W x 105”L x 64”H shall be designed to support wind speeds up to 120mph, all larger sizes shall be designed to support wind speeds up to 80mph.

F. Standard enclosures are ASSE 1060 certified.

G. Custom enclosures are designed and constructed in the same manner as standard certified enclosures, but have not been lab tested and listed by ASSE.

2.2 MATERIALS OF FABRICATION

A. Aluminum sheeting shall be 3003 aluminum (.050/18 gauge), stucco embossed finish and shall meet ASTM B209. Stucco embossed finish reduces the glare and helps hide any surface scratches or imperfections received in the field.

B. Bracing shall be 6063-T52 aluminum and shall meet ASTM B221

C. No wood or particle board to be used in the construction.

D. Anchor pads (galvanized steel) with 3/8-16 unc x 2 ¾ long zinc plated wedge anchors and drill bit are to be supplied.

E. Insulation shall be approximately 1.5" unicellular, non-wicking, polyisocyanate foam sprayed in place that forms a monolithic bond between the aluminum bracing and aluminum sheeting.

F. The Insulation shall have the following properties:

- R-Value 10

- Dimensional Stability — less than 2% linear change
- Compressive Strength — 51psi
- Flame point — 325 degrees
- Water absorption — .037psf
- Porosity — 91%

2.3 HEATING EQUIPMENT (ASSE 1060 Class I-Required; ASSE 1060 Class II-Optional)

A. Heating equipment shall protect the piping and equipment from exterior temperatures to -30°F. ETL listed thermostatically controlled wall mounted air forced heaters shall be furnished and designed by the enclosure manufacturer to maintain the equipment at +40°F, in accordance with ASSE 1060 1.2.2.1.

B. Heating equipment shall be wall mounted to the supplied heater plates and a minimum of 8” above the slab unless it is UL or ETL certified and NEC approved for submersion.

C. Power source shall be protected with a GFI receptacle, U.L. 943, NEMA.3R. Mounted a minimum of 8” from the bottom of the receptacle to the top of the slab.

D. Separate 20 amp circuits are recommended for each heater, so in the event a circuit fails all other circuits will remain powered. Installations must be in accordance with the local and national codes.

E. The heaters shall be ETL listed for wet/damp locations.

2.4 RECOMMENDED SLAB SIZE & INSTALLATION

A. The recommended slab size shall be 9” larger than the enclosures exterior dimensions and a minimum of 4” thick.

B. The enclosure shall be assembled and mounted to concrete slab per the manufactures instructions provided with the enclosure.

ITEM 680.560200OD - EMERGENCY PRE-EMPTION SYSTEM - OPTICAL DETECTOR

DESCRIPTION - This work shall consist of furnishing and installing a new emergency pre-emption system detector, in accordance with the plans, specifications, standard sheets, manufacturer's instructions or directions of the Engineer and/or Owner.

MATERIALS - The specific component used shall be an Opticom Priority Control System - Model No. 721, Single Channel, Two Direction Detector or current equivalent, manufactured by Global Traffic Technologies (formerly 3M Traffic Control Systems).

CONSTRUCTION DETAILS - The Contractor shall install the equipment in accordance with Manufacturer's instructions, plans, standard sheets and the Engineer's visibility requirements and the special notes provided.

The Contractor shall assist in the performance of all tests, described in the special notes provided, and in the presence of the Engineer and/or the City of Syracuse Fire Department Representative.

METHOD OF MEASUREMENT - The measurement for payment is the number of each unit furnished and installed in accordance with the contract documents.

BASIS OF PAYMENT - The unit price bid shall include furnishing all labor, materials, tools, equipment, attachments, fittings and safety requirements as determined by U.S. Department of Labor's Occupational Safety and Health Standards, and incidentals as necessary to complete the work of installing and performing all necessary tests to ensure the desired performance of the device.

ITEM 680.560300OD - EMERGENCY PRE-EMPTION SYSTEM - PHASE SELECTOR

DESCRIPTION - This work shall consist of furnishing and installing a new emergency pre-emption system phase selector, in accordance with the plans, specifications, standard sheets, manufacturer's instructions or directions of the Engineer and/or Owner.

MATERIALS - The specific component used shall be an Opticom Priority Control System - Model No. 754, Phase Selector, (Auxiliary Detector/Green Sense Harness) or current equivalent. The provided phase selector shall be compatible with the provided signal controllers, manufactured by Global Traffic Technologies (formerly 3M Traffic Control Systems).

CONSTRUCTION DETAILS - The Contractor shall install the equipment in accordance with Manufacturer's instructions, plans, standard sheets and the special notes provided.

The Contractor shall assist in the performance of all tests, described in the special notes provided, and in the presence of the Engineer and/or the City of Syracuse Fire Department Representative.

METHOD OF MEASUREMENT - The measurement for payment is the number of each unit furnished and installed in accordance with the contract documents or as directed by the Engineer.

BASIS OF PAYMENT - The unit price bid shall include furnishing all labor, materials, tools, equipment, attachments, fittings and safety requirements as determined by U.S. Department of Labor's Occupational Safety and Health Standards, and incidentals as necessary to complete the work of installing and performing all necessary tests to ensure the desired performance of the device.

iSLC-3100-7P-C

CIMCON's Plug & Play Wireless Lighting Controller (iSLC) with Embedded CISCO Certified Radio, Remote Monitoring, Dimming, GPS, Metering and Sensor Input Capabilities

CIMCON Lighting
Cities. Simplified.

CISCO Compatible

4.53 in. W x 2.68 in. H
115 mm W x 67.98 mm H

CIMCON's iSLC-3100-7P-C is an intelligent wireless lighting controller with exceptional fault tolerance and a multitude of features. Each iSLC-3100-7P-C is integrated with a CISCO CGE mesh enabled/powerful 1W radio that provides intelligent ON/OFF switching, dimming control, GPS, highly accurate power metering, analog and digital sensor inputs and constant status and health monitoring of your lighting fixtures.

Key Features of the iSLC-3100-7P-C

A Photocell in Every Controller
CIMCON's iSLCs operate immediately upon installation without dependency on the network.

A GPS in Every Controller (Optional)
CIMCON's GPS capabilities reduce install times and eliminate future mapping issues. GPS coordinates for each iSLC are sent automatically to the Central Management System for overlay on a Google Maps interface. Without GPS, installers must manually record the pole ID, iSLC ID and its Latitude/Longitude location to map them correctly.

Extended Surge Protection
CATB surge protection is standard, CATC is an option.

Full ANSI C136.41 7-pin Dimming Receptacle Support
CIMCON's iSLCs work with any lamp type or manufacturer with full support for all 7-pins on the ANSI C136.41 dimming receptacle for true "plug and play" installation. CIMCON's controllers support the addition of digital or analog sensors, such as motion, vehicle counts or environmental sensors through pins 6 and 7.

Revenue Grade Energy Metering
CIMCON's iSLCs monitor Current, Voltage, Frequency, Power Factor, kW and kWh, and offer metering accuracy as high as 0.5% for accurate consumption data and billing.

Over-The-Air Upgrade
Update easily with "over-the-air" firmware upgrades.

Fault Tolerance
Each CIMCON iSLC is a highly intelligent stand-alone device that utilizes the latest developments in self-organizing, self-healing, wireless technologies using open standards such as IPV6 and IEEE 802.15.4 g. Proper operation and execution of a light's schedule is not dependent on network communications.

Remote Control and Scheduling
CIMCON's iSLCs support multiple lamp control modes such as user configurable ON/OFF/DIM schedules programmed on a daily/monthly/special events basis, local ad-hoc control, photocell and astro-clock scheduling, and mixed mode scheduling incorporating sensor inputs.

Flexible Dimming Control
Support dimming through 0-10 VDC, PWM or DALI interfaces.

Fault Monitoring
CIMCON's iSLCs provide extensive fault monitoring to report on day burners, burnouts, lamp cycling, ballast failures, over/under voltage, abnormal power consumption, low power factors, communication failures and more. All faults are sent to the Central Management System for alarm routing, visualization and fault correction. Alerts can be sent directly to relevant users immediately when they occur.

Robust Security
Access control with X.509 certificate based identity. Built-in link layer & application layer encryption mechanism.

To learn more about CIMCON Lighting's solutions, please contact us at sales@cimconlighting.com

iSLC-3100-7P-C

Technical Specifications

Controller	16-bit Microcontroller
Power Metering	Parameters measured: Voltage, Current, Power Factor, Frequency, kW and kWh
Rated Load	1560VA 960 W
Power Supply	Universal AC input 85 V-264 V, 50/60 Hz (305 V optional)
Radio Communication (Cisco Network Stack)	Processor: 32 bit CORTEX, RAM: 128+4 KB, Flash: 1 MB NAN Network: Symbol Rate: 150 Ksps Carrier Frequency: 902-928 MHz Modulation format: 2FSK Transmitter Output: 27-30 dBm (1W) Line-of-sight range: 500m Protocol: IEEE 802.15.4 g; 6LoWPAN Security: Addressing: IPv6 Encryption: Advanced Encryption Standard (AES-128 or AES-256) Security: Secure Hash Algorithm ECC-256; X.509 certificate; RADIUS-AAA Key storage: Secure NVRAM with tamper detection
GPS Module Specification (Optional)	Receiver Type: 22 Tracking/66 Acquisition Channel GPS Receiver GPS L1, C/A Code Max. Update rate: 10 Hz Sensitivity: Tracking: -165 dBm Reacquisition: -160 dBm Cold starts: -147 dBm Time-To-First-Fix: Cold starts: 31s (typical) Warm starts: 30s Hot starts: <1s EPO Assist: 13s (CTTFF) Accuracy: Automatic Position3: 2.5 m CEP Speed: 0.1 m/s
Dimming Interface	Control Voltage: 0-10 V with Short Circuit protection — Maximum Current: 10 mA or PWM Dimming: 10 V p-p, 400 Hz — Maximum Current: 10 mA (Sink) or DALI
Optional Sensor Inputs	Provision of one Digital input and one Analog input that can be used for motion-based lighting controls, adaptive lighting or advanced lighting controls
Surge Protection	Standard: 445 Joule CATB (6kV/3kA), Optional: 700 Joule CATC (20kV/10kA)
Operating Conditions	-40^{0}C to +70^{0}C / -40^{0}F to +158^{0}F, 20% to 90% Rh non-condensing; IP66
RoHS	Yes
Central Management System	Web-based software allows remote configuration, monitoring, control, and reporting

To learn more about CIMCON Lighting's solutions, please contact us at sales@cimconlighting.com

iSLC-3100-7P-C

Mechanical Specifications

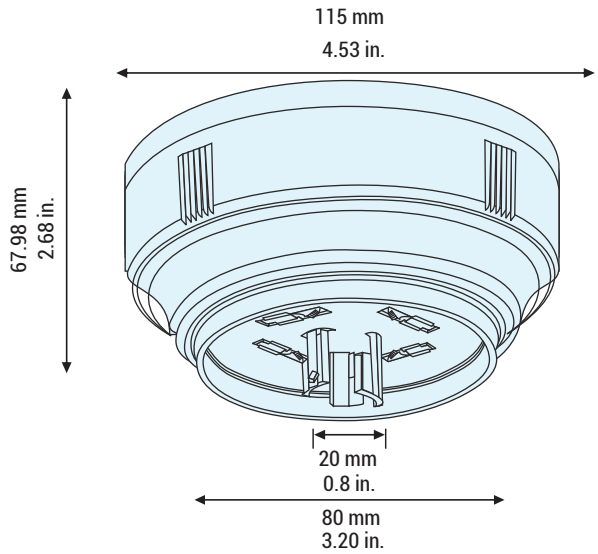

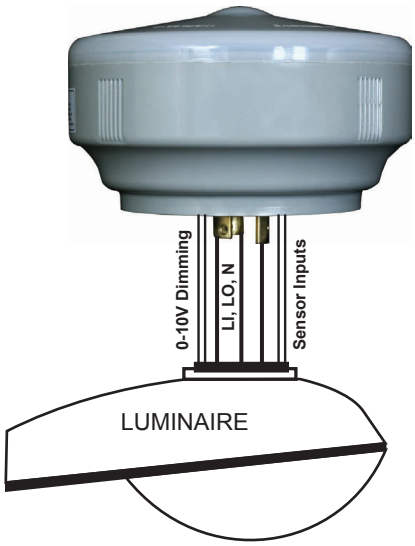

How It Works

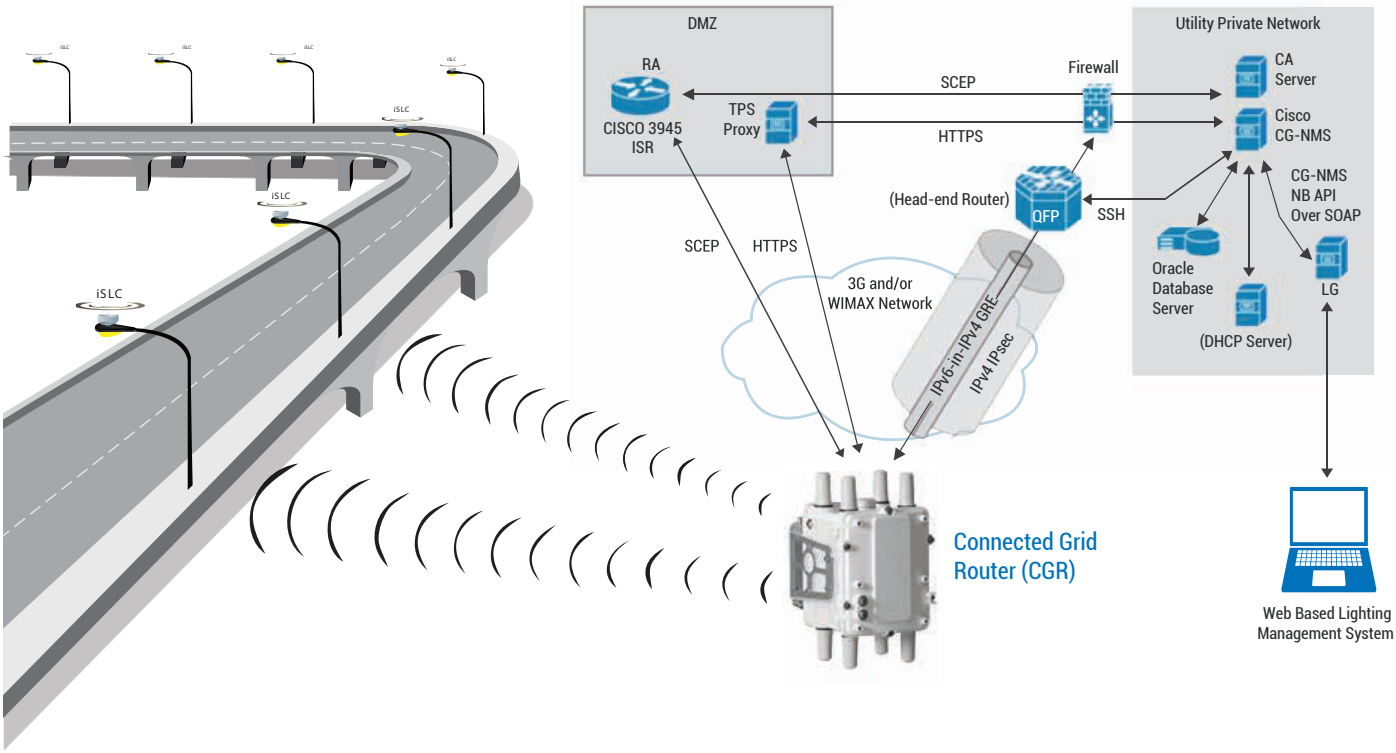

To learn more about CIMCON Lighting's solutions, please contact us at sales@cimconlighting.com

iSLC-3100-7P-C

Ordering Code

iSLC-3100-7P-C-xxx-A-G-IO-CATB-05

- **ANSI C136.41 7- Pin Interface for Dimming and Sensor Inputs**
- **CISCO RADIO**
- **CUSTOMER ID**
- **DIMMING INTERFACE**
  - 'A' - ANALOG (0-10V)
  - 'P' - PWM
  - 'D' - DALI
- **GPS**
  - 'G' - WITH GPS
  - ' ' - WITHOUT GPS
- **ADDITIONAL IO**
  - 1 DIGITAL INPUT
  - 1 ANALOG INPUT
- **SURGE PROTECTION**
  - CATB
  - CATC
- **ENERGY METERING ACCURACY**
  - '05' - 0.5%
  - '20' - 2%.

Ordering Guide

iSLC-3100-7P C XXX _ _ _ _ _ _ _ _ _ _

PRODUCT ID	CISCO RADIO	CUSTOMER ID	DIMMING INTERFACE	GPS	ADDITIONAL IO	SURGE PROTECTION	ENERGY METERING ACCURACY
ANSI C136.41 7-Pin Interface for Dimming and Sensor Inputs			'A' - ANALOG (0-10V) 'P' - PWM 'D' - DALI	'G'= WITH GPS ' ' = WITHOUT GPS	'IO' - 1 Digital & 1 Analog ' ' - No Inputs	'CATB' - (6kV/3kA) 'CATC' - (20kV/10kA)	'05' - 0.5% '20' - 2%

Project Information

Project Name

Date

Comments

Prepared By

Specifications subject to change without notice.
iSLC-3100-7P-C-R2
© CIMCON Lighting, Inc. 2018

Worldwide Headquarters
CIMCON Lighting, Inc.
600 Technology Park Drive, Suite 100
Billerica, MA 01821, USA
(+1) 978 320 4002
info@cimconlighting.com

Asia Pacific Office
CIMCON Software (India) Pvt. Ltd.
802, SAKAR IV, Ellisbridge
Ahmedabad - 380 006, India
(+) 91 79 2657 8639
info.apac@cimconlighting.com

iSLC-3500-C

INTERNAL WIRELESS LIGHTING CONTROLLER (iSLC)

CIMCON

Technical Data Sheet

CIMCON's Internal Wireless Lighting Controller (iSLC) with Embedded Cisco Certified Radio, Remote Monitoring, Dimming, Metering and Sensor Input Capabilities

CIMCON's iSLC-3500-C is an intelligent wireless lighting controller with exceptional fault tolerance and a multitude of features. Each iSLC-3500-C is integrated with a powerful, 1 W Cisco Resilient Mesh radio that provides intelligent on/off switching, dimming control, highly accurate power metering, analog and digital sensor inputs and constant status and health monitoring of your lighting fixtures.

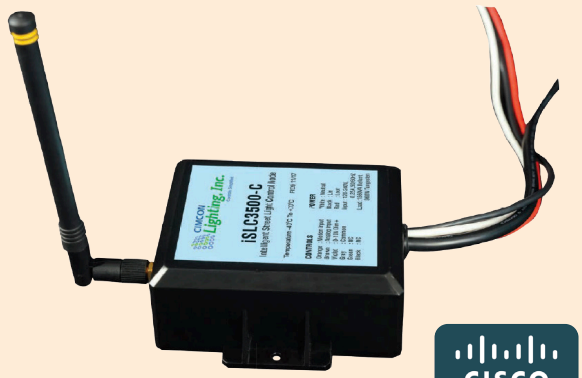

Cisco Compatible

Key Features of the iSLC-3500-C

Extended Surge Protection

Comes with a CATB surge protection.

Energy Metering

CIMCON's iSLCs monitor current, voltage, frequency, power factor, kW and kWh, and offer metering accuracy of 2% for accurate consumption data and billing.

Over-The-Air Upgrade

Update easily with "over-the-air" firmware upgrades.

Fault Tolerance

Each CIMCON iSLC is a highly intelligent stand-alone device that utilizes the latest developments in self-organizing, self-healing, wireless technologies using open standard such as IPV6 and IEEE 802.15.4g. Proper operation and execution of a light's schedule is not dependent on network communications.

Post Top Retrofit

CIMCON's iSLCs support multiple lamp control modes such as user configurable on/off/dim schedules programmed on a daily/monthly/special events basis, local ad-hoc control and astro-clock scheduling, and mixed mode scheduling incorporating sensor inputs.

Flexible Dimming Control

Support dimming through 0-10 VDC or DALI interface.

Fault Monitoring

CIMCON's iSLCs provide extensive fault monitoring to report on day burners, burnouts, lamp cycling, ballast failures, over/under voltage, abnormal power consumption, low power factors, communication failures and more. All faults are sent to CIMCON's LightingGale software for alarm routing, visualization and fault correction. Alerts can be sent directly to relevant users immediately when they occur.

Robust Security

Access control with X.509 certificate based identity. Inbuilt link layer & application layer encryption mechanism.

In-Fixture Installation

Good for fixtures where external mounting is not possible due to the design or other issues.

www.cimconlighting.com | sales@cimconlighting.com | 978-320-4002

iSLC-3500-C Technical Specifications

Controller	16-bit microcontroller
Power Metering	Parameters measured: voltage, current, power factor, frequency, kW and kWh
Rated Load	1560 VA 960 W
Power Supply	Universal AC input 100 V-277 V (+/- 10%), 50/60 Hz
Radio Communication (Cisco Network Stack)	Processor: 32 bit CORTEX, RAM: 128+4 KB, Flash: 1 MB NAN Network Symbol Rate: 150 ksps Carrier Frequency: 902-928 MHz Modulation format: 2FSK Transmitter Output: 30 dBm (1 W) maximum Line-of-sight range: 500m Protocol: IEEE 802.15.4g; 6LoWPAN Security Addressing: IPv6 Encryption: Advanced Encryption Standard (AES-128 or AES-256) Security: Secure Hash Algorithm ECC-256; X.509 certificate; RADIUS-AAA Key storage: Secure NVRAM with tamper detection
Dimming Interface	Control Voltage: 0-10 V with Short Circuit protection Maxiumum Current: 10 mA or DALI
Sensor Inputs	Provision of one digital input and one analog input that can be used for motion-based lighting controls, adaptive lighting or advanced lighting controls
Surge Protection	Standard: 445 Joule CATB (6kV/3kA)
Operating Conditions	-40°C to +70°C / -40°F to +158°F, 20% to 90% Rh non-condensing; IP66
RoHS	Yes
Central Management System	Web-based software allows remote configuration, monitoring, control, and reporting
IP Rating	IP66
Certifications	UL, CUL, FCC, IC

iSLC-3500-C

Mechanical Specifications

3.86 in. L x 3.70 in. W x 1.57 in. H
98 mm L x 94 mm W x 40 mm H

Weight: 0.6 lbs.

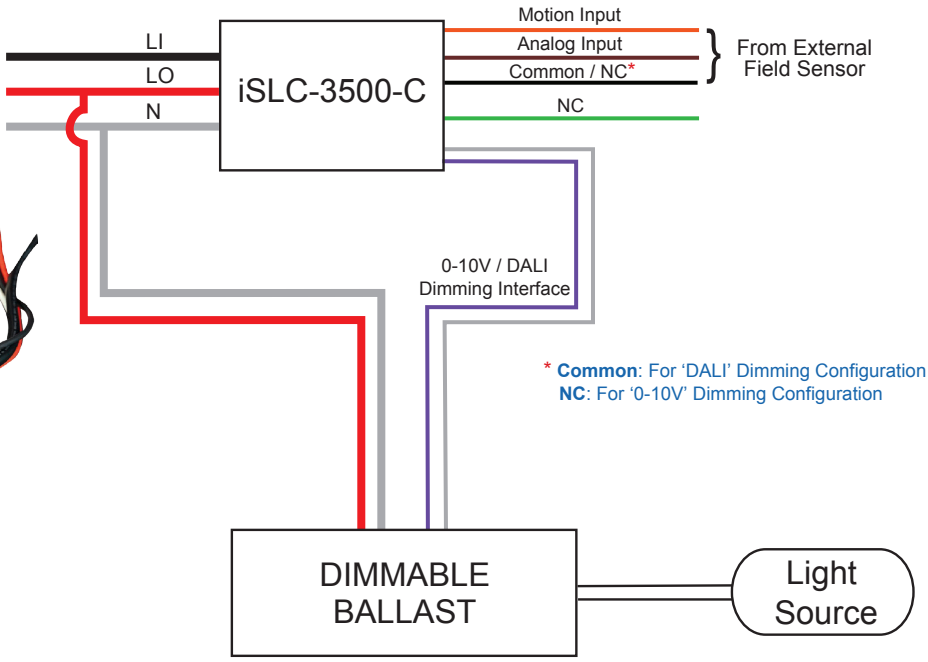

* **Common**: For 'DALI' Dimming Configuration
NC: For '0-10V' Dimming Configuration

How it Works

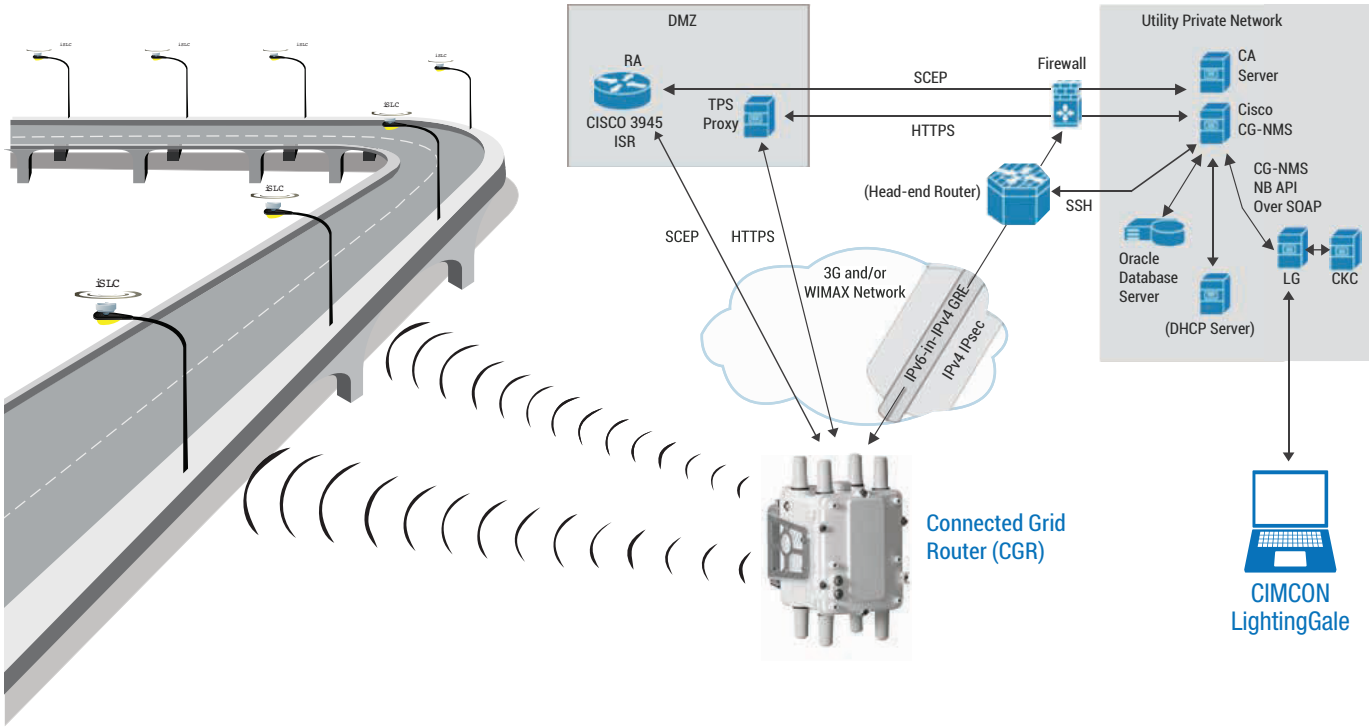

iSLC-3500-C

Ordering Code

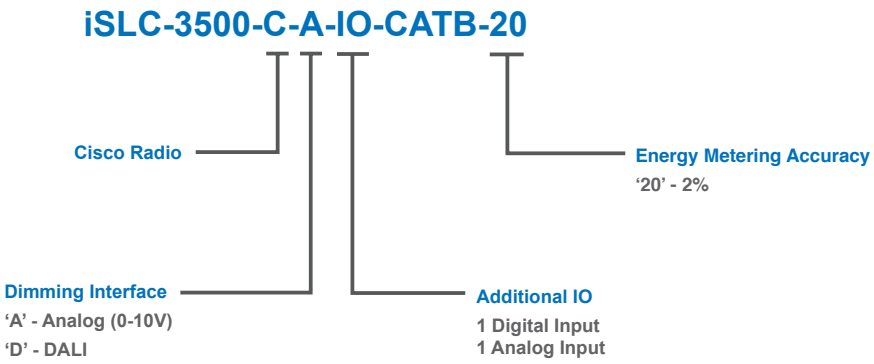

Specifications subject to change without notice.
iSLC-3500-C R11
©2020 CIMCON Lighting, Inc.

7520 East Main Street
Lima, NY 14485
Ph: 585-624-1990
Fax: 585-624-2102

Round Lightbase

Design:	Standard

Diameter:	Height:	Weight
24''	48''	1885 lbs

Customer:	City of Syracuse
Project:	
Contact:	Rebecca Klossner
Phone:	(315) 221-1501
Email:	rklossner@syrgov.net

Total QTY of Bases:	20

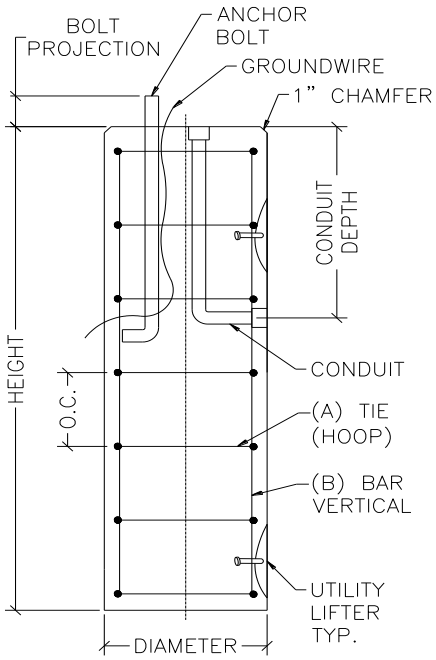

Concrete Strength:	5000
Bolt Projection:	3"
Anchor Bolt Circle:	15"
QTY of Anchor Bolts	4
Size of Anchor Bolts:	3/4"
Size of Conduit:	2"
Type of Conduit:	RGS
Conduit Depth:	
Conduit Supplied By:	Lakelands
Groundwire:	#6 Bare Groundwire - 18" Exposed Each End
Amount Exposed Above Grade:	2"
QTY of Nuts Returned Per Base:	4
QTY of Washers Returned Per Base:	8
Finish:	

REINFORCEMENT					
BAR	SIZE	SPACING	HOOP DIA	LENGTH	QTY
A	#3	12" O.C.	20'' Dia	75''	5
B	#4	-	-	44''	4

Conduit Config:	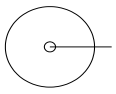	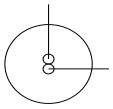	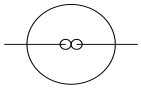	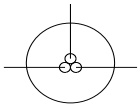	
QTY:	0	0	20	0	0
Notes:	With sleeve for ground rod. Minimum 19" long anchor bolts.				

Bolt Circle Configuration:

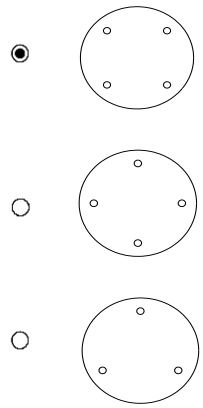

7520 East Main Street
Lima, NY 14485
Ph: 585-624-1990
Fax: 585-624-2102

Round Lightbase

Design:	Standard

Diameter:	Height:	Weight
24''	60''	2357 lbs

Customer:	City of Syracuse
Project:	
Contact:	Rebecca Klossner
Phone:	(315) 221-1501
Email:	rklossner@syrgov.net

Total QTY of Bases:	10

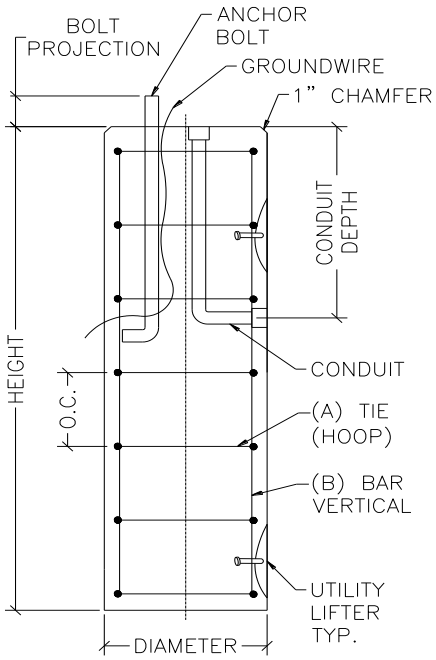

Concrete Strength:	5000
Bolt Projection:	
Anchor Bolt Circle:	
QTY of Anchor Bolts	
Size of Anchor Bolts:	
Size of Conduit:	
Type of Conduit:	RGS
Conduit Depth:	
Conduit Supplied By:	Lakelands
Groundwire:	#6 Bare Groundwire - 18" Exposed Each End
Amount Exposed Above Grade:	
QTY of Nuts Returned Per Base:	
QTY of Washers Returned Per Base:	
Finish:	

REINFORCEMENT

BAR	SIZE	SPACING	HOOP DIA	LENGTH	QTY
A	#3	12" O.C.	20'' Dia	75''	6
B	#4	-	-	56''	4

Conduit Config:	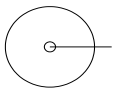	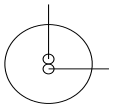	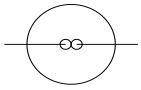	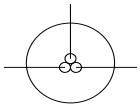	
QTY:	0	0	10	0	0
Notes:					

Bolt Circle Configuration:

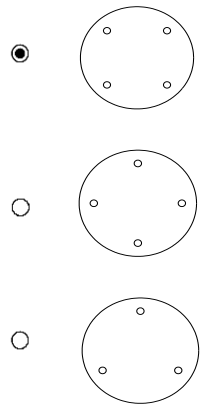

TRON® In-Line Fuseholders

Double-Pole for Class CC and 13/32″ × 1½″ Fuses

HEH-AA Fuseholder

HEX & HEY Series

HEX Series

Catalog Symbol: HEX-AA[1] [2], HEX-AB, HEX-AC, HEX-AD, HEX-AE, HEX-AY, HEX-BB, HEX-CC, HEX-JJ, HEX-JK, and HEX-KK.

In-Line Fuseholders, Double Pole

Water-Resistant

For breakaway holders, see page 2

Agency Information:

[1]UL Recognized, Guide IZLT2, File E14853

[2]CSA Certified, Class 6225-01, File 47235

HEX — For any 13/32″ × 1½″ fuse. Fuseholder rated 30A, 600V (CSA Listed 15A max.). Typical fuse types: BAF, FNM, FNQ, and KTK (1/10 - 30A).

HEY Series

Catalog Symbol: HEY-AA, HEY-AB, HEY-AC, HEY-AD, HEY-AE, HEY-AL, HEY-BB, and HEY-JJ.

In-Line Fuseholders, Double-Pole

Water-Resistant

For breakaway holders, see page 2

HEY — Optional breakaway receptacle, water-resistant, polarized, and accepting Class CC branch circuit fuses (Buss Type KTK-R, FNQ-R, & LP-CC; 600V or less, 200,000A interrupting rating.) Particularly applicable in street lighting circuits.

Example:

A double-pole, in-line holder for Class CC fuses. A single #12 stranded copper wire, copper crimp, on the load side. A single #4 stranded, copper wire, copper crimp on the line side. Insulating boots are required.

1. Choose HEY- Series.
2. Choose “A” for load side.
3. Choose “C” for line side.
4. Choose 2A0660 insulating boots from page 2.

Complete Catalog Number: HEY-AC, 2A0660; 4 insulating boots required per holder

Recommended Torque on Coupling Nut: 10-20 in-lb.

Catalog and Specification Data

Conductor Terminals

Terminal Type	Conductor Data Size	No. Per Terminal	Solid	Stranded	Catalog Symbol
Copper Crimp	#12 to #8	1	•	•	A
	#12	2	•	•	
	#10	2	•	•	B
	#6	1	•	•	
	#4	1	•	•	
	#8	2	•	•	C
	#4	1	—	•	
	#6	2	•	•	D
	#2	1	—	•	
	#4	2	•	•	E
Copper Set-Screw					
	#12 to #3	1	•	•	J
	#12 to #3	2	•	•	K
Aluminum Set-Screw					
	#12 to #2	1	•	•	L
	#12 to #2	2	•	•	Y

Catalog Data — Insulating Boots

Catalog Numbers	Type
2A0660	Single Conductor
2A0661	Two Conductor

General Information:

- Insulating boots are not included with non-breakaway parts and must be ordered separately. They come standard with the breakaway series. The HEX-AW does not have the boots. This catalog item does not have a breakaway receptacle.
- When boots are utilized, extra heat retention requires that fuses are sized at a minimum of 200% of the RMS load current.

Ordering Information:

HEX HEY	—			
		Load Terminal		**Line Terminal**

FNM 13/32″ x 1-1/2″ 250Vac time-delay supplemental fuses

FNM-15 Fuse

RoHS

250Vac
1/10 to 30A

Catalog symbol / color code:

- FNM
  - Green (250Vac max)

Description:

Time-delay supplemental fuse.

For superior protection, Eaton recommends upgrading to Bussmann series Low-Peak™ Class CC fuses. See data sheet No. 1023.

Specifications:

Ratings

Fuse amp range	Interrupting rating at system voltage		Agency information	
	250Vac	125Vac	UL®	CSA®
1/10 to 1	35A	10kA	X	X
1-1/8 to 3-1/2	100A	10kA	X	X
4 to 10	200A	10kA	X	X
12 to 30	10kA	–	X	X

Agency information

- CE
- UL Listed, Std. 248-14, Guide JDYX; File E19180
- CSA Certified, Class 1422-01, File 53787
- RoHS compliant

Catalog numbers (amps)			
FNM-1/10	FNM-8/10	FNM-2-1/2	FNM-6-1/4
FNM-1/8	FNM-1	FNM-2-8/10	FNM-7
FNM-15/100	FNM-1-1/8	FNM-3	FNM-8
FNM-2/10	FNM-1-1/4	FNM-3-2/10	FNM-9
FNM-1/4	FNM-1-4/10	FNM-3-1/2	FNM-10
FNM-3/10	FNM-1-1/2	FNM-4	FNM-12
FNM-4/10	FNM-1-6/10	FNM-4-1/2	FNM-15
FNM-1/2	FNM-1-8/10	FNM-5	FNM-20
FNM-6/10	FNM-2	FNM-5-6/10	FNM-25
FNM-3/4	FNM-2-1/4	FNM-6	FNM-30

Carton quantity

Amps	Qty.
1/10 to 30	10

Dimensions - in (mm):

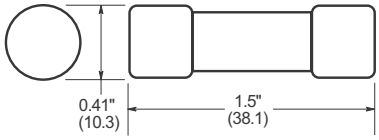

Features

- Color coded green for 250Vac maximum voltage rating
- Melamine tube construction
- Nickel-plated endcaps

Typical applications

- Circuits with high inrush currents (motor/transformer loads)
- Supplemental protection for inductive circuits up to 250Vac.

Recommended fuse blocks/fuse holders

Catalog symbol	Description	Data sheet No.
Blocks		
BMM	1-, 2- and 3-pole modular blocks with optional covers	10235
DIN-Rail holders / switches		
CCP-_-30M	1-, 2- and 3-pole switch	1157
CHM	1-, 2- and 3-pole	3185
Optima NG	3-pole protection module	1109
Optima	3-pole holder	1102
Optima	3-pole holder + switch	1103
Panel mount holders		
HPM and HPM-D	1-pole holder	2112
HPC-D	1-pole holder	2109
HPS2	2-pole holder	2140
HPF, HPF-C and HPF-WT	1-pole holder	2114
HPS	1-pole holder	2113
HPG and HPD	1-pole holder	2108
In-line holders		
HEB	1-pole holder	2127
HEX	2-pole holder	2126
Fuseclips		
1A3400, 5956 and 5960	PCB fuseclips	2132
Fuse covers		
CVR(I)-CCM(-QC)	Finger-safe fuse cover	10235

Dummy fuse "neutrals"

NTN-R-60

NTN-R-200

NNB

NNB-R

Note: These are not fuses

Catalog no.	Volts	Fuse equivalent	
		Dimension	Amp range
NNB	—	13/32" x 1-1/2"	—
NNB-R	—	Class CC	—
NNC	—	1/4" x 1-1/4"	—
NTN-R-30	250	Class R/H	Up to 30
NTN-R-60	250	Class R/H	35-60
NTN-R-100	250	Class R/H	70-100
NTN-R-200	250	Class R/H	110-200
NTN-R-400	250	Class R/H	225-400
NTN-R-600	250	Class R/H	450-600
NTS-R-30	600	Class R/H	Up to 30
NTS-R-60	600	Class R/H	35-60
NTS-R-100	600	Class R/H	70-100
NTS-R-200	600	Class R/H	110-200
NTS-R-400	600	Class R/H	225-400
NTS-R-600	600	Class R/H	450-600

Fuse pullers

Fuse pullers are available in various sizes to help safely and easily extract fuses from blocks and holders. They are only to be used when the associated circuit has been de-energized.

Catalog no.	Application
FP-2	13/32" to 13/16" diameter fuses
FP-3	1" to 1-3/4" diameter. fuses
FP-4	1-3/4" to 2-1/2" diameter. fuses
FP-6	Up to 60 A Class T fuses
FP-A3	Glass tube and ATC fuses
CFP-30	CUBEFuse up to 30 A
CFP-60	CUBEFuse 35-60 A
CFP-100	CUBEFuse 70-100 A

Fuse testers

Fuse testers for automotive blade, and, glass tube and ferrule fuses up to 1-7/8" length. Probes slide to appropriate fuse length. Batteries are included and replaceable.

WARNING: DO NOT test fuses while they are in the fuse panel.

Catalog no.	Description
FT-2*	Glass tube and ferrule fuse tester
FT-3	Blade fuse tester

* Replacement battery is Rayovac 364 or equivalent.

"A" Series - A-Frame Bracket 8' - 12'

Wood Pole Mounting

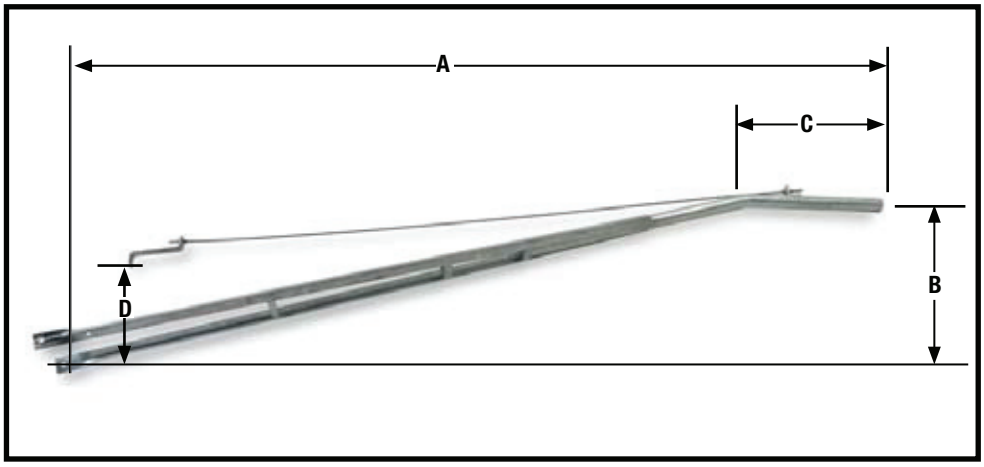

- *Guy rod hardware shipped in bags*
- *Brackets shipped unassembled*
- *Mounting hardware not included*
- *Finish: Hot Dip Galvanized*
- *Advise Pole Diameter*

Steel

Catalog Number	Pipe Size	Nom. Length	A	B	C	D	Wt./LBS.
A125S080	1-1/4"	8'	90"	30"	11"	28"	34
A125S100	1-1/4"	10'	114"	35"	14"	28"	42
A125S120	1-1/4"	12'	138"	43"	17"	28"	49
A200S080	2"	8'	90"	30"	11"	28"	39
A200S100	2"	10'	114"	35"	14"	28"	48
A200S120	2"	12'	138"	43"	17"	28"	56

"A" Series - A-Frame Bracket 14' - 20'

Wood Pole Mounting

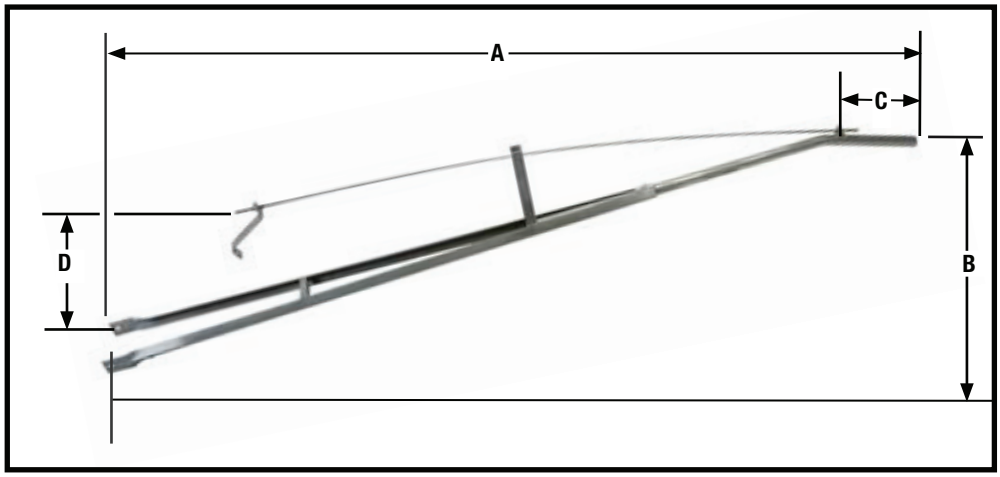

- *Guy rod hardware shipped in bags*
- *Brackets shipped unassembled*
- *Mounting hardware not included*
- *Finish: Hot Dip Galvanized*
- *Advise Pole Diameter*

Steel

Catalog Number	Pipe Size	Nom. Length	A	B	C	D	Wt./LBS.
A125S140	1-1/4"	14'	162"	50"	20"	28"	64
A125S160	1-1/4"	16'	186"	56"	23"	28"	70
A200S140	2"	14'	162"	50"	20"	28"	72
A200S160	2"	16'	186"	56"	23"	28"	80
A200S180*	2"	18'	210"	66"	26"	24"	88
A200S200*	2"	20'	234"	73"	29"	21"	96

** Also available with 1-1/4" slipfit end*

Truss Brackets

Wood Pole Mounting

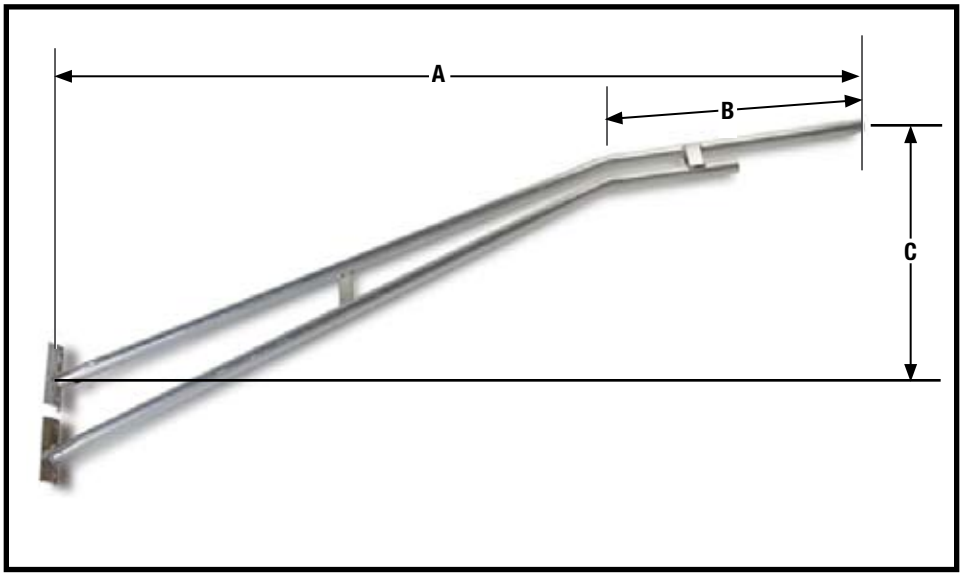

- *Wood pole mounting*
- *Mounting hardware not included*

Aluminum **Finish: None**

Catalog Number	Pipe Size	Nom. Length	A	B	C	Wt./LBS.
C200A060WM	2"	6'	72"	36"	13"	20
C200A080WM	2"	8'	96"	36"	21"	25
C200A100WM	2"	10'	120"	36"	28"	30
C200A120WM	2"	12'	144"	36"	36"	35
C200A140WM	2"	14'	168"	36"	44"	40
C200A150WM	2"	15'	180"	36"	48"	45

Steel **Finish: Hot Dip Galvanized**

Catalog Number	Pipe Size	Nom. Length	A	B	C	Wt./LBS.
C200S060WM	2"	6'	72"	36"	13"	58
C200S080WM	2"	8'	96"	36"	21"	72
C200S100WM	2"	10'	120"	36"	28"	85
C200S120WM	2"	12'	144"	36"	36"	99
C200S140WM	2"	14'	168"	36"	44"	112
C200S150WM	2"	15'	180"	36"	48"	122
C200S160WM	2"	16'	186"	36"	52"	171
C200S180WM	2"	18'	210"	36"	60"	188
C200S200WM	2"	20'	234"	36"	68"	205

BRACKETS + ADAPTERS

BRACKETS AND ADAPTERS FOR WOOD POLES

"P" SERIES STEEL BRACKETS FOR WOOD POLES [HOT DIP GALVANIZED]

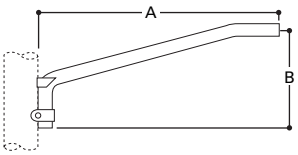

Catalog Number	Pipe Size (In.)	Arm (A) Length (Ft.)	Arm (B) Rise (In.)	Bracket Net. Wt. (Lbs.)	Maximum Luminaire Net. Wt. (Lbs.)	Maximum Luminaire EPA
P125S020	1 1/4	2.0	13	7	90	5.0
P125S026	1 1/4	2.5	15	8	80	2.4
P125S040	1 1/4	4.0	19	1	80	2.4
P125S060	1 1/4	6.0	24	15	80	2.4
P125S080	1 1/4	8.0	30	19	35	1.2
P200S020	2	2.0	13	10	90	5.0
P200S026	2	2.5	15	12	80	2.4
P200S040	2	4.0	19	13	80	2.4
P200S060	2	6.0	24	23	80	2.4
P200S080	2	8.0	30	28	70	1.8

NOTES: Mounting hardware not included.

"S" SERIES SINGLE GUY ROD GALVANIZED STEEL BRACKETS

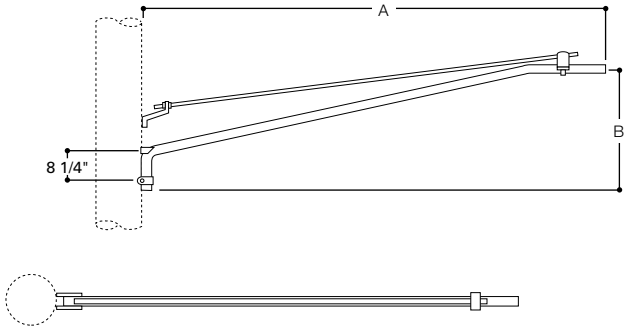

Catalog Number	Pipe Size (In.)	Arm (A) Length (Ft.)	Arm (B) Rise (In.)	Bracket Net. Wt. (Lbs.)	Maximum Luminaire Net. Wt. (Lbs.)	Maximum Luminaire EPA
Single Guy Wire						
S125S060	1 1/4	6	24	20	80	2.4
S125S080	1 1/4	8	30	25	70	1.8
S125S100	1 1/4	10	35	30	50	1.5
Double Guy Wire						
D200S060	2	6	24	28	80	2.4
D200S080	2	8	30	36	80	2.4
D200S100	2	10	35	43	80	2.4
D200S120	2	12	40	50	80	2.4

NOTES: Mounting hardware not included. Available prime painted—Consult your Cooper Lighting Representative.

LUMEC by signify

Roadway

RoadFocus

RFL
Cobrahead (large)

Project:

Location:

Cat.No:

Type:

Lamps: Qty:

Notes:

Lumec **RoadFocus LED Cobra Head** luminaires feature a sleek design that provides seamless replacement of existing HID luminaires. **RoadFocus** is available in three sizes, offers multiple lumen packages, and a complete array of optical distributions, making it an outstanding solution for all types of roadway applications. Includes Service Tag, innovative way to provide assistance throughout the life of the product.

Ordering guide

example: RFL-215W96LED4K-G2-R3M-UNV-DMG-RCD7-GY3

Series	LED module	CCT	Generation	Distribution	Voltage	Controls [4]	Options	Finish
RFL								
RoadFocus Roadway, large	**145W64LED**	**4K** 4000k	**G2** Generation 2	**Type 2**	**UNV** 120-277V	**DALI**[1] Digitally addressable lighting interface	**API** Factory installed NEMA label, ANSI C136.15-2015 compliant	**BK** Black
	220W64LED	**3K** 3000k		**R2S** Type II short (ASYM)	**HVU** 347-480V	**DMG**[5] 0-10V	**FAWS**[7] Field adjustable wattage selector	**BR** Bronze
	245W72LED	**2.7K**[11] 2700k		**R2M** Type II Medium (ASYM)		**SRD**[1] Sensor ready driver, standard configuration	**HS** House Side Shield, shield, 1 per 16 LED light engine	**GY3** Gray
	260W76LED			**Type 3**		**SRD1**[1] Sensor ready driver, alternate configuration[1]	**PH8**[1,10] Twist-lock photoelectric cell, UNV (120-277VAC)	**WH** White
	90W80LED			**R3S** Type III short (ASYM)			**PH8/347**[10,13] Twist-lock photoelectric cell (347VAC)	
	135W80LED			**R3M** Type III Medium (ASYM)			**PH8/480**[10,13] Twist-lock photoelectric cell (480VAC)	
	180W80LED			**Type 4**			**PHXL**[1,10] Twist-lock photoelectric Cell, extended life, UNV (120-277VAC)	
	270W80LED			**4** Type IV (ASYM)			**PH9**[10] Shorting cap	
	160W96LED			**Type 5**			**RCD**[3,9] Receptacle for twist-lock photocell or shorting cap, 5-pin (optional)	
	215W96LED			**5**[2] Type V (SYMM)			**RCD7**[3,5] Receptacle for twist-lock photocell or shorting cap, 7-pin (standard)	
	335W96LED						**SP2** 20kV / 10kA Surge protector	
	190W112LED							
	241W112LED							
	350W112LED[7]							

1. Not available with **HVU**.
2. Not available with **HS** option.
3. Use of photoelectric cell or shorting cap is required to ensure proper illumination.
4. Select either **DALI** or **DMG** or **SRD** or **SRD1** mandatory option.
5. Please note this integrated feature come standard with RoadFocus.
6. Only available with **SRD** or **SRD1** Driver Options.
7. Only available with **DMG** Driver Options
9. Not available with **SRD** Driver Options.
10. Either **RCD** or **RCD7** must be selected for this option.
11. Extended lead-time may apply. Consult factory.
12. **FAWS** table accuracy +/- 15% on these models.
13. Not available with **UNV**.

RFL RoadFocus LED Cobrahead (large)

Roadway

Accessories (must be ordered as separate line items – quickly and easily installed in the field)

Interact City Connector node *

*Contact the factory for additional support when connected lighting or additional services are desired.

Predicted Lumen Depreciation Data

Predicted performance derived from LED manufacturer's data and engineering design estimates, based on IESNA LM-80 methodology. Actual experience may vary due to field application conditions.L_{70} is the predicted time when LED performance depreciates to 70% of initial lumen output. Calculated per IESNA TM21-11. Published L_{70} hours limited to 6 times actual LED test hours

Ambient Temperature °C	Driver mA	Calculated L_{70} Hours	L_{70} per TM-21	Lumen Maintenance % at 60,000 hrs
25°C	up to 1050 mA	>100,000 hours	>60,000 hours	>88%

LED Wattage values

Ordering Code	Total LEDs	LED Current (mA)	Average System Watts[14]	Wattage label[15]
RFL-145W64LED	64	700	137	140
RFL-220W64LED	64	1050	216	220
RFL-245W72LED	72	1050	244	240
RFL-260W76LED	76	1050	256	260
RFL-90W80LED	80	350	93	90
RFL-135W80LED	80	530	136	140
RFL-180W80LED	80	700	174	170
RFL-270W80LED	80	1050	268	270

Ordering Code	Total LEDs	LED Current (mA)	Average System Watts[14]	Wattage label[15]
RFL-160W96LED	96	530	156	160
RFL-215W96LED	96	700	207	210
RFL-335W96LED	96	1050	323	320
RFL-190W112LED	112	530	188	190
RFL-241W112LED	112	700	243	240
RFL-350W112LED	112	950	340	340

14. Typical values, rounded.
15. As per ANSI C136.15-2015. Consult factory for other labeling needs.

LED Lumen values

		Type R2S			Type R2M			Type R3S			Type R3M			Type 4			Type 5		
Ordering Code	Color Temp.	Lumen Output	Efficacy (LPW)	BUG Rating	Lumen Output	Efficacy (LPW)	BUG Rating	Lumen Output	Efficacy (LPW)	BUG Rating	Lumen Output	Efficacy (LPW)	BUG Rating	Lumen Output	Efficacy (LPW)	BUG Rating	Lumen Output	Efficacy (LPW)	BUG Rating
RFL-145W64LED	4000	17,955	131	B3-U0-G2	17,361	127	B3-U0-G3	17,586	128	B2-U0-G3	17,183	125	B3-U0-G3	17,299	126	B3-U0-G3	17,596	128	B4-U0-G2
RFL-220W64LED	4000	24,554	114	B3-U0-G2	23,743	110	B3-U0-G3	24,051	111	B3-U0-G4	23,500	109	B3-U0-G3	23,657	110	B3-U0-G4	24,064	112	B5-U0-G3
RFL-245W72LED	4000	27,624	113	B3-U0-G3	26,710	110	B3-U0-G3	27,057	111	B3-U0-G4	26,437	108	B3-U0-G3	26,614	109	B3-U0-G4	27,073	111	B5-U0-G3
RFL-260W76LED	4000	29,158	114	B4-U0-G3	28,194	110	B4-U0-G3	28,560	112	B3-U0-G4	27,906	109	B3-U0-G3	28,093	110	B3-U0-G4	28,577	112	B5-U0-G3
RFL-90W80LED	4000	12,325	133	B3-U0-G2	11,917	129	B3-U0-G2	12,072	130	B2-U0-G2	11,795	127	B3-U0-G2	11,874	128	B2-U0-G2	12,079	130	B4-U0-G2
RFL-135W80LED	4000	17,729	130	B3-U0-G2	17,142	126	B3-U0-G3	17,365	127	B2-U0-G3	16,967	124	B3-U0-G3	17,081	125	B3-U0-G3	17,375	127	B4-U0-G2
RFL-180W80LED	4000	22,444	129	B3-U0-G2	21,702	125	B3-U0-G3	21,984	126	B3-U0-G3	21,480	123	B3-U0-G3	21,624	124	B3-U0-G4	21,996	126	B5-U0-G3
RFL-270W80LED	4000	30,693	114	B4-U0-G3	29,678	111	B4-U0-G3	30,064	112	B3-U0-G4	29,374	110	B4-U0-G4	29,571	110	B3-U0-G4	30,081	112	B5-U0-G4
RFL-160W96LED	4000	21,230	136	B3-U0-G2	20,337	130	B3-U0-G3	20,509	131	B3-U0-G3	20,440	131	B3-U0-G3	20,304	130	B3-U0-G4	20,974	134	B5-U0-G3
RFL-215W96LED	4000	26,876	130	B3-U0-G3	25,746	124	B3-U0-G3	25,963	125	B3-U0-G4	25,876	125	B3-U0-G3	25,703	124	B3-U0-G4	26,552	128	B5-U0-G3
RFL-335W96LED	4000	37,400	116	B4-U0-G3	35,827	111	B4-U0-G4	36,129	112	B3-U0-G4	36,008	111	B4-U0-G4	35,768	111	B3-U0-G5	36,949	114	B5-U0-G4
RFL-190W112LED	4000	24,768	132	B3-U0-G2	23,726	126	B3-U0-G3	23,927	128	B3-U0-G4	23,846	127	B3-U0-G3	23,687	126	B3-U0-G4	24,470	130	B5-U0-G3
RFL-241W112LED	4000	31,355	129	B4-U0-G3	30,036	124	B4-U0-G3	30,290	125	B3-U0-G4	30,188	124	B4-U0-G4	29,987	123	B3-U0-G4	30,977	127	B5-U0-G4
RFL-350W112LED	4000	40,210	118	B4-U0-G4	38,519	113	B4-U0-G4	38,844	114	B3-U0-G5	38,714	114	B4-U0-G4	38,456	113	B3-U0-G5	39,726	117	B5-U0-G4

Actual performance may vary due to installation variables including optics, mounting/ceiling height, dirt depreciation, light loss factor, etc.; highly recommended to confirm performance with a layout - contact signify.com/outdoorluminaires. Consult DLC QPL to confirm your specific fixture selection is DLC approved.

Note: Some data may be scaled based on tests of similar but not identical luminaries.

RFL RoadFocus LED Cobrahead (large)

Roadway

LED Lumen values (continued)

Ordering Code	Color Temp.	Type R2S			Type R2M			Type R3S			Type R3M			Type 4			Type 5		
		Lumen Output	Efficacy (LPW)	BUG Rating	Lumen Output	Efficacy (LPW)	BUG Rating	Lumen Output	Efficacy (LPW)	BUG Rating	Lumen Output	Efficacy (LPW)	BUG Rating	Lumen Output	Efficacy (LPW)	BUG Rating	Lumen Output	Efficacy (LPW)	BUG Rating
RFL-145W64LED	3000	16,942	124	B3-U0-G2	16,381	120	B3-U0-G3	16,594	121	B2-U0-G3	16,214	118	B3-U0-G2	16,323	119	B2-U0-G3	16,604	121	B4-U0-G2
RFL-220W64LED	3000	23,169	107	B3-U0-G2	22,403	104	B3-U0-G3	22,694	105	B3-U0-G3	22,174	103	B3-U0-G3	22,322	103	B3-U0-G4	22,707	105	B5-U0-G3
RFL-245W72LED	3000	26,065	107	B3-U0-G3	25,203	103	B3-U0-G3	25,531	105	B3-U0-G4	24,945	102	B3-U0-G3	25,113	103	B3-U0-G4	25,545	105	B5-U0-G3
RFL-260W76LED	3000	27,513	108	B3-U0-G3	26,603	104	B3-U0-G3	26,949	105	B3-U0-G4	26,331	103	B3-U0-G3	26,508	104	B3-U0-G4	26,964	105	B5-U0-G3
RFL-90W80LED	3000	11,629	125	B3-U0-G2	11,245	121	B3-U0-G2	11,391	123	B2-U0-G2	11,130	120	B2-U0-G2	11,204	121	B2-U0-G2	11,397	123	B4-U0-G2
RFL-135W80LED	3000	16,728	123	B3-U0-G2	16,175	119	B3-U0-G3	16,385	120	B2-U0-G3	16,010	117	B3-U0-G2	16,117	118	B2-U0-G3	16,394	120	B4-U0-G2
RFL-180W80LED	3000	21,177	122	B3-U0-G2	20,477	118	B3-U0-G3	20,743	119	B3-U0-G3	20,268	116	B3-U0-G3	20,404	117	B3-U0-G4	20,755	119	B5-U0-G3
RFL-270W80LED	3000	28,961	108	B4-U0-G3	28,004	104	B4-U0-G3	28,367	106	B3-U0-G4	27,717	103	B3-U0-G3	27,903	104	B3-U0-G4	28,383	106	B5-U0-G3
RFL-160W96LED	3000	20,032	128	B3-U0-G2	19,190	123	B3-U0-G3	19,352	124	B3-U0-G3	19,287	123	B3-U0-G3	19,158	122	B3-U0-G4	19,791	126	B5-U0-G3
RFL-215W96LED	3000	25,360	123	B3-U0-G3	24,293	117	B3-U0-G3	24,498	118	B3-U0-G4	24,416	118	B3-U0-G3	24,253	117	B3-U0-G4	25,054	121	B5-U0-G3
RFL-335W96LED	3000	35,290	109	B4-U0-G3	33,805	105	B4-U0-G4	34,091	106	B3-U0-G4	33,976	105	B4-U0-G4	33,750	104	B3-U0-G5	34,864	108	B5-U0-G4
RFL-190W112LED	3000	23,371	125	B3-U0-G2	22,388	119	B3-U0-G3	22,577	120	B3-U0-G3	22,501	120	B3-U0-G3	22,351	119	B3-U0-G4	23,089	123	B5-U0-G3
RFL-241W112LED	3000	29,586	122	B4-U0-G3	28,342	117	B4-U0-G3	28,581	118	B3-U0-G4	28,485	117	B3-U0-G3	28,295	116	B3-U0-G4	29,229	120	B5-U0-G3
RFL-350W112LED	3000	37,941	112	B4-U0-G4	36,345	107	B4-U0-G4	36,652	108	B3-U0-G5	36,529	108	B4-U0-G4	36,286	107	B3-U0-G5	37,484	110	B5-U0-G4

Ordering Code	Color Temp.	Type R2S			Type R2M			Type R3S			Type R3M			Type 4			Type 5		
		Lumen Output	Efficacy (LPW)	BUG Rating	Lumen Output	Efficacy (LPW)	BUG Rating	Lumen Output	Efficacy (LPW)	BUG Rating	Lumen Output	Efficacy (LPW)	BUG Rating	Lumen Output	Efficacy (LPW)	BUG Rating	Lumen Output	Efficacy (LPW)	BUG Rating
RFL-145W64LED	2700	13,489	98	B3-U0-G2	13,043	95	B3-U0-G2	13,212	96	B2-U0-G2	12,909	94	B3-U0-G2	12,996	95	B2-U0-G3	13,220	96	B4-U0-G2
RFL-220W64LED	2700	18,350	85	B3-U0-G2	17,743	82	B3-U0-G3	17,973	83	B2-U0-G3	17,561	81	B3-U0-G3	17,679	82	B3-U0-G3	17,984	83	B4-U0-G2
RFL-245W72LED	2700	20,643	85	B3-U0-G2	19,961	82	B3-U0-G3	20,220	83	B3-U0-G3	19,757	81	B3-U0-G3	19,889	82	B3-U0-G4	20,232	83	B5-U0-G3
RFL-260W76LED	2700	21,790	85	B3-U0-G2	21,070	82	B3-U0-G3	21,344	83	B3-U0-G3	20,854	81	B3-U0-G3	20,994	82	B3-U0-G4	21,356	83	B5-U0-G3
RFL-90W80LED	2700	9,315	100	B2-U0-G2	9,007	97	B2-U0-G2	9,124	98	B1-U0-G2	8,915	96	B2-U0-G2	8,975	97	B2-U0-G2	9,129	98	B3-U0-G2
RFL-135W80LED	2700	13,357	98	B3-U0-G2	12,916	95	B3-U0-G2	13,084	96	B2-U0-G2	12,784	94	B3-U0-G2	12,869	94	B2-U0-G3	13,091	96	B4-U0-G2
RFL-180W80LED	2700	16,861	97	B3-U0-G2	16,304	94	B3-U0-G3	16,516	95	B2-U0-G3	16,137	93	B3-U0-G2	16,245	93	B2-U0-G3	16,525	95	B4-U0-G2
RFL-270W80LED	2700	22,937	86	B3-U0-G2	22,179	83	B3-U0-G3	22,467	84	B3-U0-G3	21,952	82	B3-U0-G3	22,099	82	B3-U0-G4	22,480	84	B5-U0-G3
RFL-160W96LED	2700	15,996	102	B3-U0-G2	15,323	98	B3-U0-G3	15,452	99	B2-U0-G3	15,400	98	B3-U0-G2	15,298	98	B2-U0-G3	15,803	101	B4-U0-G2
RFL-215W96LED	2700	20,191	98	B4-U0-G3	19,342	93	B3-U0-G3	19,505	94	B3-U0-G3	19,440	94	B3-U0-G3	19,310	93	B3-U0-G4	19,948	96	B5-U0-G3
RFL-335W96LED	2700	27,949	87	B4-U0-G3	26,774	83	B3-U0-G3	27,000	84	B3-U0-G4	26,909	83	B3-U0-G3	26,730	83	B3-U0-G4	27,613	85	B5-U0-G3
RFL-190W112LED	2700	18,661	99	B3-U0-G2	17,877	95	B3-U0-G3	18,027	96	B2-U0-G3	17,967	96	B3-U0-G3	17,847	95	B3-U0-G3	18,437	98	B4-U0-G2
RFL-241W112LED	2700	23,556	97	B3-U0-G2	22,566	93	B3-U0-G3	22,756	94	B3-U0-G3	22,680	93	B3-U0-G3	22,528	93	B3-U0-G4	23,272	96	B5-U0-G3
RFL-350W112LED	2700	30,106	89	B4-U0-G3	28,840	85	B4-U0-G3	29,084	86	B3-U0-G4	28,986	85	B3-U0-G4	28,793	85	B3-U0-G4	29,744	88	B5-U0-G4

Actual performance may vary due to installation variables including optics, mounting/ceiling height, dirt depreciation, light loss factor, etc.; highly recommended to confirm performance with a layout - contact Applications at signify.com/outdoorluminaires. Consult DLC QPL to confirm your specific fixture selection is DLC approved.

Note: Some data may be scaled based on tests of similar but not identical luminaries.

Field Adjustable Wattage (FAWS) Multiplier Chart

FAWS Position	Typical Delivered Lumens Multiplier	Typical System wattage
1	0.31	0.28
2	0.53	0.50
3	0.62	0.58
4	0.70	0.67
5	0.78	0.75
6	0.83	0.81
7	0.89	0.87
8	0.92	0.91
9	0.96	0.95
10	1.00	1.00

Note: Typical value accuracy +/- 5%

RFL RoadFocus LED Cobrahead (large)

Roadway

Dimensions

Side View

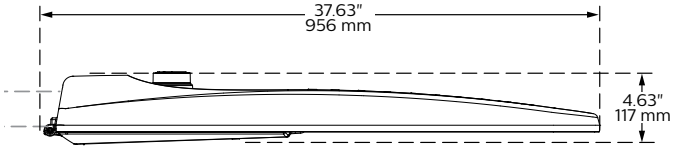

Bottom View

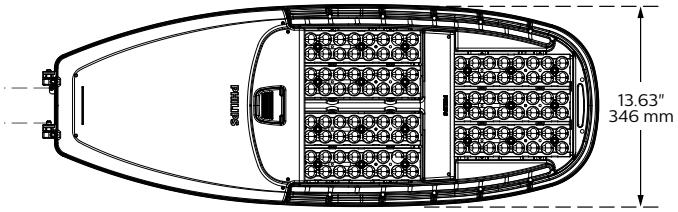

Weight: 27.3 Lbs

EPA: 0.92 sq. ft.

Specifications

Housing

Made of a low copper die cast Aluminum alloy (A360), 0.100" (2.5mm) minimum thickness. Fits on a 1.66" (42mm) O.D. (1.25" NPS), 1.9" (48mm) O.D. (1.5" NPS) or 2 3/8" (60mm) O.D. (2" NPS) by 5 1/2" (140mm) minimum long tenon. Comes with 2 zinc plated clamps fixed by 4 zinc plated hexagonal bolts 3/8 16 UNC for ease of installation. Provides an easy step adjustment of +/- 5° tilt in 2.5º increments. Includes integral bubble level standard (always included). A quick release, tool less entry, single latch, hinged, removable door opens downward to provide access to electronic components and to a terminal block. Door is secured to prevent accidental dropping or disengagement. A clearance of 13" (330mm) at the rear is required in order to remove the door. Complete with a bird guard protecting against birds and similar intruders and an ANSI label as per C136.15-2015 to identify wattage and source (both included in box). Housing (including electrical compartment) rated IP54 per ANSI C136.37.

Light Engine

Composed of 4 main components: LED Module / Optical System / Heat Sink / Driver.

Electrical components are RoHS compliant, IP66 sealed light engine LEDs tested by ISO 17025-2005 accredited lab in accordance with IESNA LM-80 guidelines in compliance with EPA ENERGY STAR, extrapolations in accordance with IESNA TM-21. Metal core board ensures greater heat transfer and longer lifespan.

LED Module: Composed of high-performance white LEDs. Color temperature as per ANSI/NEMA bin 2700 Kelvin nominal (2725 ±145K) CRI 80 min, 3000 Kelvin nominal (3045K +/- 175K) or 4000 Kelvin nominal (3985K +/- 275K), CRI 70 Min. 75 Typical. Other CCT/CRI also available, consult factory.

Optical System: Composed of high performance UV stabilized optical grade polymer refractor lenses to achieve desired distribution optimized to get maximum spacing, target lumens and a superior lighting uniformity. System is rated IP66. Performance shall be tested per LM-63, LM-79 and TM-15 (IESNA) certifying its photometric performance. 0% uplight and U0 per IESNA TM-15.

Heat Sink: Built in the housing, designed to ensure high efficacy and superior cooling by natural vertical convection air flow pattern always close to LEDs and driver optimising their efficiency and life. Product does not use any cooling device with moving parts (only passive cooling). Wide openings enable natural cleaning and removal of dirt and debris. Entire luminaire is rated for operation in ambient temperature of -40°C / -40°F up to +40°C / +104°F.

Driver: High power factor of 90% min. Electronic driver, operating range 50/60 Hz. Auto adjusting universal voltage input from 120 to 277 or 347 to 480 VAC rated for both application line to line or line to neutral, Class I, THD of 20% max. 1 driver (64 LED); 2 drivers (all others).

DMG: Dimming compatible 0-10 volts. The current supplying the LEDs will be reduced by the driver if the driver experiences internal overheating as a protection to the LEDs and the electrical components. Output is protected from short circuits, voltage overload and current overload. Automatic recovery after correction. Standard built in driver surge protection of 2.5kV (min).

Integrated Features

DMG: Dimmable driver 0-10V.

RCD7*: Receptacle with 7 pins enabling dimming and additional functionality (to be determined), can be used with a twist lock Interact City node or photoelectric cell or a shorting cap.

SP1: Surge protection device tested in accordance with ANSI/IEEE C62.45 per ANSI/IEEE C62.41.2 Scenario I Category C High Exposure 10kV/10kA waveforms for Line-Ground, Line-Neutral and Neutral-Ground, and in accordance with DOE MSSLC Model Specification for LED Roadway Luminaires Appendix D Electrical Immunity High test level 10kV/10kA.

Please note that these integrated features always come with RoadFocus luminaire.

** Use of photoelectric cell or shorting cap is required to ensure proper illumination.*

RFL RoadFocus LED Cobrahead (large)

Roadway

Specifications (continued)

Driver and Luminaire Options

DALI*: Pre-set driver compatible with the DALI control system.

SRD: Sensor Ready Driver including SR communication (used for dimming and other functionalities), 24V auxiliary supply and a logical signal input (LSI) connected to the top NEMA twist lock receptacle and bottom TLRSR receptacle, if this option included/chosen. This configuration is compatible with Interact City controllers.

SRD1: Sensor Ready Driver including SR communication (used for dimming and other functionalities) but with 24V auxiliary supply and a logical signal input (LSI) not connected to the top NEMA twist lock. If TLRSR receptacle option included, standard SR communication, 24V auxiliary supply and LSI are connected to the TLRSR receptacle.

FAWS: Field Adjustable Wattage Selector, pre-set to the highest position, can be easily switched in the field to the required position. This reduces total luminaire wattage consumption and reduces the light level – see the FAWS multiplier chart for more details.

Note: It is not recommended to use FAWS with other dimming or controls; if you do, set the switch to position 10 (maximum output) to enable the other dimming or controls. Switching FAWS to any position other than 10 will disable the other dimming or controls.

SP2: 20kV / 10kA surge protection device that provides extra protection beyond the SP1 10kV/10kA level.

RCD*: Receptacle with 5 pins enabling dimming, can be used with a twist lock Interact City or photoelectric cell or a shorting cap.

Please note: Additional hardware will be required to utilize the additional 2 pins on this receptacle.

HS: House side shield, 1 per 16 LED light engine.

PH8: Twist-lock Photoelectric Cell, UNV (120-277VAC).

PH8/347: Twist-lock Photoelectric Cell, HVU (347VAC).

PH8/480: Twist-lock Photoelectric Cell, HVU (480VAC).

PHXL: Twist-lock Photoelectric Cell, extended life, UNV (120-277VAC).

PH9: Shorting cap.

API: Factory Installed NEMA label, ANSI C136.15-2015 compliant. Consult factory for other labeling needs.

** Use of photoelectric cell or shorting cap is required to ensure proper illumination.*

Luminaire Useful Life

Refer to IES files for energy consumption and delivered lumens for each option. Based on ISTMT in situ thermal testing in accordance with UL1598 and UL8750, System Reliability Tool, Advance data and LED manufacturer LM-80/TM-21 data, expected to reach 100,000 + hours with >L70 lumen maintenance @ 25°C. Luminaire Useful Life accounts for LED lumen maintenance AND all of these additional factors including: LED life, driver life, PCB substrate, solder joints, on/off cycles, burning hours and corrosion.

Wiring

The connection of the luminaire is done using a terminal block connector 600V, 85A for use with #2 14 AWG. wires from the primary circuit, located inside the housing. Due to the inrush current that occurs with electronic drivers, recommend using a 10Amp time-delay fuse to avoid unwanted fuse blowing (false tripping) that can occur with normal or fast acting fuses.

Hardware

All exposed screws shall be complete with Ceramic primer seal to reduce seizing of the parts, also offers a high resistance to corrosion. All seals and sealing devices are made and/or lined with EPDM and/or silicone and/or rubber.

Finish

Color in accordance with the AAMA 2603 standard. Application of polyester powder coat paint (4 mils/100 microns) with ± 1 mils/24 microns of tolerance. The Thermosetting resins provides a discoloration resistant finish in accordance with the ASTM D2244 standard, as well as luster retention in keeping with the ASTM D523 standard and humidity proof in accordance with the ASTM D2247 standard.

The surface treatment achieves a minimum of 3000 hours for salt spray resistant finish in accordance with testing performed and per ASTM B117 standard.

LED products manufacturing standard

The electronic components sensitive to electrostatic discharge (ESD) such as light emitting diodes (LEDs) are assembled in compliance with IEC61340-5-1 and ANSI/ESD S20.20 standards so as to eliminate ESD events that could decrease the useful life of the product.

Vibration Resistance

The RFL meets the ANSI C136.31, American National Standard for Roadway Luminaire Vibration specifications for Bridge/overpass applications. (Tested for 3G over 100,000 cycles by independent lab)

Certifications and Compliance

cULus Listed for Canada and USA. Luminaire meets DOE and MSSLC Model Specification for LED Roadway Luminaires. Most versions of RoadFocus LED Cobrahead luminaires are DesignLights Consortium qualified, consult DLC QPL to confirm your specific fixture selection is approved. CCTs 3000K and warmer are Dark Sky Approved. Luminaire complies with or exceeds the following ANSI C136 standards: .2, .3, .10, .14, .15, .22, .25, .31, .37, .41.

Service Tag

Each individual luminaire is uniquely identifiable, thanks to the Service tag application. With a simple scan of a QR code, placed on the inside of the mast door, you gain instant access to the luminaire configuration, making installation and maintenance operations faster and easier, no matter what stage of the luminaire's lifetime. Just download the APP and register your product right away.

For more details visit: **signify.com/servicetag**

Limited Warranty

10-year limited warranty.
See **signify.com/warranties** for details and restrictions.

Brackets/Arms

For brackets / arms available with this luminaire, see Lumec 3D for details.

signify

©2019 Signify Holding. All rights reserved. This document may be subject to change. No representation or warranty as to the accuracy or completeness of the information included herein is given and any liability for any action in reliance thereon is disclaimed. All trademarks are owned by Signify Holding or their respective owners.

Signify North America Corporation
200 Franklin Square Drive,
Somerset, NJ 08873
Telephone 855-486-2216

Signify Canada Ltd.
281 Hillmount Road,
Markham, ON, Canada L6C 2S3
Telephone 800-668-9008

LUMEC by signify

Roadway

RoadFocus

RFM
Cobrahead (medium)

Project:

Location:

Cat.No:

Type:

Lamps: Qty:

Notes:

Lumec **RoadFocus LED Cobra Head** luminaires feature a sleek design that provides seamless replacement of existing HID luminaires. **RoadFocus** is available in three sizes, offers multiple lumen packages, and a complete array of optical distributions, making it an outstanding solution for all types of roadway applications. Includes Service Tag, innovative way to provide assistance throughout the life of the product.

Ordering guide

example: RFM-108W32LED3K-G2-R2M-UNV-DMG-HS-PH8-RCD7-GY3

Series	LED module	CCT	Generation	Distribution	Voltage	Options: Controls [4]	Options: Options	Finish
RFM RoadFocus Roadway, medium	**30W24LED** **35W32LED**[12] **45W24LED** **50W24LED** **55W24LED** **55W32LED**[12] **55W48LED**[12] **72W32LED** **80W48LED** **85W24LED** **85W36LED** **90W40LED** **108W32LED** **108W48LED** **130W32LED**[7] **135W40LED** **160W48LED**	**4K** 4000k **3K** 3000k **2.7K**[11] 2700k	**G2** Generation 2	**Type 2** **R2S** Type II short (ASYM) **R2M** Type II Medium (ASYM) **Type 3** **R3S** Type III short (ASYM) **R3M** Type III Medium (ASYM) **Type 4** **4** Type IV (ASYM) **Type 5** **5**[2] Type V (SYMM)	**UNV** 120-277V **HVU** 347-480V	**DALI**[1] Digitally addressable lighting interface **DMG**[5] 0-10V **SRD**[1] Sensor ready driver, standard configuration **SRD1**[1] Sensor ready driver, alternate configuration	**2C** Two clamp with 4 bolts **API** Factory installed NEMA label, ANSI C136.15-2015 compliant **FAWS**[7] Field adjustable wattage selector **HS** House Side Shield, shield, 1 per 16 LED light engine **NRC**[8] No receptacle **NYBC** 4-position terminal block **PH8**[1,10] Twist-lock photoelectric cell, UNV (120-277VAC) **PH8/347**[10,13] Twist-lock photoelectric cell (347VAC) **PH8/480**[10,13] Twist-lock photoelectric cell (480VAC) **PHXL**[1,10] Twist-lock photoelectric Cell, extended life, UNV (120-277VAC) **PH9**[10] Shorting cap **RCD**[3,9] Tool less receptacle for twist-lock photocell or shorting cap, 5-pin (optional) **RCD7**[3,5] Tool less receptacle for twist-lock photocell or shorting cap, 7-pin (standard) **SP2** 20kV / 10kA Surge protector **TLRSR**[6] SR receptacle	**BK** Black **BR** Bronze **GY3** Gray **WH** White

1. Not available with **HVU**.
2. Not available with **HS** option.
3. Use of photoelectric cell or shorting cap is required to ensure proper illumination.
4. Select either **DALI** or **DMG** or **SRD** or **SRD1** mandatory option.
5. Please note this integrated feature come standard with RoadFocus.
6. Only available with **SRD** or **SRD1** Driver Options.
7. Only available with **DMG** Driver Options
8. Not available with **PH8**, **PH8/347**, **PH8/480**, **PHXL**, **PH9**, **DALI**, **SRD** or **SRD1** Driver Options.
9. Not available with **SRD** Driver Options.
10. Either **RCD** or **RCD7** must be selected for this option.
11. Extended lead-time may apply. Consult factory.
12. **FAWS** table accuracy +/- 15% on these models.
13. Not available with **UNV**.

RFM RoadFocus LED Cobrahead (medium)

Roadway

Accessories (must be ordered as separate line item - quickly and easily installed in the field)

Interact City connector node.*

* Contact the factory for additional support when connected lighting or additional services are desired.

Predicted Lumen Depreciation Data

Predicted performance derived from LED manufacturer's data and engineering design estimates, based on IESNA LM-80 methodology. Actual experience may vary due to field application conditions.L_{70} is the predicted time when LED performance depreciates to 70% of initial lumen output. Calculated per IESNA TM21-11. Published L_{70} hours limited to 6 times actual LED test hours

Ambient Temperature °C	Driver mA	Calculated L_{70} Hours	L_{70} per TM-21	Lumen Maintenance % at 60,000 hrs
25°C	up to 1050 mA	>100,000 hours	>60,000 hours	>88%
25°C	above 1050 mA	74,000 hours	>36,000 hours	75%

LED Wattage values

Ordering Code	Total LEDs	LED Current (mA)	Average System Watts[14]	Wattage label[15]
RFM-30W24LED	24	350	28	30
RFM-45W24LED	24	530	41	40
RFM-55W24LED	24	700	55	50
RFM-85W24LED	24	1050	82	80
RFM-35W32LED	32	350	37	40
RFM-55W32LED	32	530	53	50
RFM-72W32LED	32	700	73	70
RFM-108W32LED	32	1050	108	110
RFM-130W32LED	32	1250	129	130

Ordering Code	Total LEDs	LED Current (mA)	Average System Watts[14]	Wattage label[15]
RFM-85W36LED	36	700	80	80
RFM-50W40LED	40	350	44	40
RFM-90W40LED	40	700	88	90
RFM-135W40LED	40	1050	135	140
RFM-55W48LED	48	350	55	60
RFM-80W48LED	48	530	81	80
RFM-108W48LED	48	700	106	110
RFM-160W48LED	48	1050	161	160

14. Typical values, rounded.
15. As per ANSI C136.15-2015. Consult factory for other labeling needs.

LED Lumen values

		Type R2S			Type R2M			Type R3S			Type R3M			Type 4			Type 5		
Ordering Code	Color Temp.	Lumen Output	Efficacy (LPW)	BUG Rating	Lumen Output	Efficacy (LPW)	BUG Rating	Lumen Output	Efficacy (LPW)	BUG Rating	Lumen Output	Efficacy (LPW)	BUG Rating	Lumen Output	Efficacy (LPW)	BUG Rating	Lumen Output	Efficacy (LPW)	BUG Rating
RFM-30W24LED	4000	3,720	133	B1-U0-G1	3,568	128	B1-U0-G1	3,707	133	B1-U0-G1	3,577	128	B1-U0-G1	3,631	130	B1-U0-G1	3,679	132	B2-U0-G1
RFM-45W24LED	4000	5,355	129	B1-U0-G1	5,135	124	B1-U0-G1	5,335	129	B1-U0-G1	5,147	124	B1-U0-G1	5,226	126	B1-U0-G2	5,295	128	B3-U0-G1
RFM-55W24LED	4000	6,791	124	B2-U0-G1	6,512	119	B2-U0-G1	6,766	124	B1-U0-G2	6,528	119	B2-U0-G1	6,628	121	B1-U0-G2	6,715	123	B3-U0-G1
RFM-85W24LED	4000	9,276	113	B2-U0-G1	8,896	108	B2-U0-G2	9,242	112	B2-U0-G2	8,917	108	B2-U0-G2	9,054	110	B2-U0-G2	9,173	112	B3-U0-G2
RFM-35W32LED	4000	5,013	136	B1-U0-G1	4,802	130	B1-U0-G1	4,876	132	B1-U0-G1	4,821	130	B1-U0-G1	4,777	129	B1-U0-G2	4,926	133	B3-U0-G1
RFM-55W32LED	4000	7,212	135	B2-U0-G1	6,908	129	B2-U0-G1	7,015	131	B1-U0-G2	6,936	130	B2-U0-G1	6,872	129	B1-U0-G2	7,087	133	B3-U0-G2
RFM-72W32LED	4000	9,129	125	B2-U0-G1	8,745	120	B2-U0-G2	8,881	122	B1-U0-G2	8,780	120	B2-U0-G2	8,700	119	B2-U0-G2	8,972	123	B3-U0-G2
RFM-108W32LED	4000	12,704	118	B3-U0-G2	12,170	113	B3-U0-G2	12,358	114	B2-U0-G2	12,218	113	B3-U0-G2	12,106	112	B2-U0-G2	12,485	116	B4-U0-G2
RFM-130W32LED	4000	14,676	114	B3-U0-G2	14,059	109	B3-U0-G3	14,277	111	B2-U0-G2	14,115	110	B3-U0-G2	13,986	109	B2-U0-G3	14,423	112	B4-U0-G2
RFM-85W36LED	4000	10,433	130	B2-U0-G2	9,994	125	B2-U0-G2	10,149	127	B2-U0-G2	10,034	125	B2-U0-G2	9,942	124	B2-U0-G2	10,253	128	B4-U0-G2
RFM-50W40LED	4000	6,351	143	B2-U0-G1	6,084	137	B2-U0-G1	6,178	139	B1-U0-G2	6,108	138	B2-U0-G1	6,052	136	B1-U0-G2	6,242	141	B3-U0-G1
RFM-90W40LED	4000	11,592	131	B3-U0-G2	11,105	126	B3-U0-G2	11,276	128	B2-U0-G2	11,148	126	B3-U0-G2	11,047	125	B2-U0-G2	11,392	129	B4-U0-G2
RFM-135W40LED	4000	15,835	117	B3-U0-G2	15,169	112	B3-U0-G3	15,404	114	B2-U0-G3	15,229	113	B3-U0-G2	15,090	112	B2-U0-G3	15,562	115	B4-U0-G2
RFM-55W48LED	4000	7,520	137	B2-U0-G1	7,204	131	B2-U0-G2	7,315	133	B1-U0-G2	7,232	131	B2-U0-G1	7,166	130	B1-U0-G2	7,390	134	B3-U0-G2
RFM-80W48LED	4000	10,817	134	B3-U0-G2	10,362	129	B2-U0-G2	10,522	131	B2-U0-G2	10,403	129	B2-U0-G2	10,308	128	B2-U0-G2	10,630	132	B4-U0-G2
RFM-108W48LED	4000	13,694	129	B3-U0-G2	13,118	124	B3-U0-G2	13,321	126	B2-U0-G2	13,170	124	B3-U0-G2	13,049	123	B2-U0-G3	13,457	127	B4-U0-G2
RFM-160W48LED	4000	19,056	119	B3-U0-G2	18,255	114	B3-U0-G3	18,537	115	B3-U0-G3	18,327	114	B3-U0-G3	18,160	113	B3-U0-G3	18,727	117	B4-U0-G2

Actual performance may vary due to installation variables including optics, mounting/ceiling height, dirt depreciation, light loss factor, etc.; highly recommended to confirm performance with a layout - contact Applications at signify.com/outdoorluminaires. Consult DLC QPL to confirm your specific fixture selection is DLC approved.

Note: Some data may be scaled based on tests of similar but not identical luminaries.

RFM RoadFocus LED Cobrahead (medium)

Roadway

LED Lumen values (continued)

Ordering Code	Color Temp.	Type R2S			Type R2M			Type R3S			Type R3M			Type 4			Type 5		
		Lumen Output	Efficacy (LPW)	BUG Rating	Lumen Output	Efficacy (LPW)	BUG Rating	Lumen Output	Efficacy (LPW)	BUG Rating	Lumen Output	Efficacy (LPW)	BUG Rating	Lumen Output	Efficacy (LPW)	BUG Rating	Lumen Output	Efficacy (LPW)	BUG Rating
RFM-30W24LED	3000	3,511	126	B1-U0-G1	3,367	121	B1-U0-G1	3,498	125	B1-U0-G1	3,375	121	B1-U0-G1	3,427	123	B1-U0-G1	3,472	124	B2-U0-G1
RFM-45W24LED	3000	5,052	122	B1-U0-G1	4,845	117	B1-U0-G1	5,034	122	B1-U0-G1	4,857	117	B1-U0-G1	4,931	119	B1-U0-G2	4,996	121	B3-U0-G1
RFM-55W24LED	3000	6,407	117	B2-U0-G1	6,145	112	B2-U0-G1	6,384	117	B1-U0-G2	6,160	113	B2-U0-G1	6,254	114	B1-U0-G2	6,336	116	B3-U0-G1
RFM-85W24LED	3000	8,753	106	B2-U0-G1	8,394	102	B2-U0-G2	8,721	106	B1-U0-G2	8,414	102	B2-U0-G2	8,543	104	B2-U0-G2	8,655	105	B3-U0-G2
RFM-35W32LED	3000	4,730	128	B1-U0-G1	4,531	123	B1-U0-G1	4,601	124	B1-U0-G1	4,549	123	B1-U0-G1	4,507	122	B1-U0-G1	4,648	126	B3-U0-G1
RFM-55W32LED	3000	6,805	127	B2-U0-G1	6,519	122	B2-U0-G1	6,619	124	B1-U0-G2	6,544	122	B2-U0-G1	6,485	121	B1-U0-G2	6,687	125	B3-U0-G1
RFM-72W32LED	3000	8,614	118	B2-U0-G1	8,252	113	B2-U0-G2	8,380	115	B1-U0-G2	8,285	113	B2-U0-G2	8,209	112	B2-U0-G2	8,465	116	B3-U0-G2
RFM-108W32LED	3000	11,987	111	B3-U0-G2	11,483	106	B3-U0-G2	11,661	108	B2-U0-G2	11,528	107	B3-U0-G2	11,423	106	B2-U0-G2	11,780	109	B4-U0-G2
RFM-130W32LED	3000	13,848	108	B3-U0-G2	13,266	103	B3-U0-G2	13,471	105	B2-U0-G2	13,318	103	B3-U0-G2	13,196	102	B2-U0-G3	13,609	106	B4-U0-G2
RFM-85W36LED	3000	9,844	123	B2-U0-G2	9,430	118	B2-U0-G2	9,576	120	B2-U0-G2	9,467	118	B2-U0-G2	9,381	117	B2-U0-G2	9,674	121	B3-U0-G2
RFM-50W40LED	3000	5,993	135	B2-U0-G1	5,741	129	B2-U0-G1	5,830	131	B1-U0-G2	5,764	130	B2-U0-G1	5,711	129	B1-U0-G2	5,889	133	B3-U0-G1
RFM-90W40LED	3000	10,938	124	B3-U0-G2	10,478	119	B2-U0-G2	10,640	120	B2-U0-G2	10,519	119	B2-U0-G2	10,423	118	B2-U0-G2	10,749	122	B4-U0-G2
RFM-135W40LED	3000	14,941	111	B3-U0-G2	14,313	106	B3-U0-G3	14,535	108	B2-U0-G2	14,370	106	B3-U0-G2	14,239	105	B2-U0-G3	14,684	109	B4-U0-G2
RFM-55W48LED	3000	7,096	129	B2-U0-G1	6,797	123	B2-U0-G1	6,903	125	B1-U0-G2	6,824	124	B2-U0-G1	6,762	123	B1-U0-G2	6,973	127	B3-U0-G1
RFM-80W48LED	3000	10,206	127	B2-U0-G2	9,777	121	B2-U0-G2	9,929	123	B2-U0-G2	9,816	122	B2-U0-G2	9,726	121	B2-U0-G2	10,030	124	B4-U0-G2
RFM-108W48LED	3000	12,921	122	B3-U0-G2	12,378	117	B3-U0-G2	12,569	119	B2-U0-G2	12,427	117	B3-U0-G2	12,313	116	B2-U0-G2	12,698	120	B4-U0-G2
RFM-160W48LED	3000	17,981	112	B3-U0-G2	17,225	107	B3-U0-G3	17,491	109	B2-U0-G3	17,293	108	B3-U0-G3	17,135	107	B3-U0-G3	17,671	110	B4-U0-G2

Ordering Code	Color Temp.	Type R2S			Type R2M			Type R3S			Type R3M			Type 4			Type 5		
		Lumen Output	Efficacy (LPW)	BUG Rating	Lumen Output	Efficacy (LPW)	BUG Rating	Lumen Output	Efficacy (LPW)	BUG Rating	Lumen Output	Efficacy (LPW)	BUG Rating	Lumen Output	Efficacy (LPW)	BUG Rating	Lumen Output	Efficacy (LPW)	BUG Rating
RFM-30W24LED	2700	2,812	101	B1-U0-G0	2,697	97	B1-U0-G1	2,802	100	B1-U0-G1	2,703	97	B1-U0-G1	2,745	98	B1-U0-G1	2,781	100	B2-U0-G1
RFM-45W24LED	2700	4,034	97	B1-U0-G1	3,869	93	B1-U0-G1	4,020	97	B1-U0-G1	3,878	94	B1-U0-G1	3,938	95	B1-U0-G1	3,989	96	B3-U0-G1
RFM-55W24LED	2700	5,102	93	B1-U0-G1	4,892	89	B1-U0-G1	5,083	93	B1-U0-G1	4,904	90	B1-U0-G1	4,979	91	B1-U0-G2	5,045	92	B3-U0-G1
RFM-85W24LED	2700	6,932	84	B2-U0-G1	6,648	81	B2-U0-G1	6,907	84	B1-U0-G2	6,664	81	B2-U0-G1	6,766	82	B1-U0-G2	6,855	83	B3-U0-G1
RFM-35W32LED	2700	3,789	102	B1-U0-G1	3,629	98	B1-U0-G1	3,686	100	B1-U0-G1	3,644	99	B1-U0-G1	3,610	98	B1-U0-G1	3,723	101	B2-U0-G1
RFM-55W32LED	2700	5,433	102	B2-U0-G1	5,205	97	B1-U0-G1	5,286	99	B1-U0-G1	5,226	98	B1-U0-G1	5,178	97	B1-U0-G2	5,340	100	B3-U0-G1
RFM-72W32LED	2700	6,859	94	B2-U0-G1	6,570	90	B2-U0-G1	6,672	91	B1-U0-G2	6,596	90	B2-U0-G1	6,536	90	B1-U0-G2	6,740	92	B3-U0-G1
RFM-108W32LED	2700	9,494	88	B2-U0-G2	9,095	84	B2-U0-G2	9,235	86	B2-U0-G2	9,131	85	B2-U0-G2	9,047	84	B2-U0-G2	9,330	86	B3-U0-G2
RFM-130W32LED	2700	10,940	85	B3-U0-G2	10,480	81	B2-U0-G2	10,642	83	B2-U0-G2	10,521	82	B2-U0-G2	10,425	81	B2-U0-G2	10,751	83	B4-U0-G2
RFM-85W36LED	2700	7,838	98	B2-U0-G1	7,508	94	B2-U0-G2	7,624	95	B1-U0-G2	7,538	94	B2-U0-G2	7,469	93	B1-U0-G2	7,703	96	B3-U0-G2
RFM-50W40LED	2700	4,800	108	B1-U0-G1	4,598	104	B1-U0-G1	4,670	105	B1-U0-G1	4,617	104	B1-U0-G1	4,574	103	B1-U0-G2	4,717	106	B3-U0-G1
RFM-90W40LED	2700	8,709	99	B2-U0-G1	8,343	94	B2-U0-G2	8,472	96	B1-U0-G2	8,376	95	B2-U0-G2	8,299	94	B2-U0-G2	8,558	97	B3-U0-G2
RFM-135W40LED	2700	11,834	88	B3-U0-G2	11,336	84	B3-U0-G2	11,511	85	B2-U0-G2	11,381	84	B3-U0-G2	11,277	83	B2-U0-G2	11,629	86	B4-U0-G2
RFM-55W48LED	2700	5,684	103	B2-U0-G1	5,445	99	B1-U0-G1	5,529	100	B1-U0-G2	5,466	99	B1-U0-G1	5,416	98	B1-U0-G2	5,586	101	B3-U0-G1
RFM-80W48LED	2700	8,150	101	B2-U0-G1	7,807	97	B2-U0-G2	7,928	98	B1-U0-G2	7,838	97	B2-U0-G2	7,766	96	B1-U0-G2	8,009	99	B3-U0-G2
RFM-108W48LED	2700	10,288	97	B2-U0-G2	9,855	93	B2-U0-G2	10,008	94	B2-U0-G2	9,894	93	B2-U0-G2	9,804	92	B2-U0-G2	10,110	95	B4-U0-G2
RFM-160W48LED	2700	14,241	89	B3-U0-G2	13,642	85	B3-U0-G2	13,853	86	B2-U0-G2	13,696	85	B3-U0-G2	13,571	84	B2-U0-G3	13,995	87	B4-U0-G2

Actual performance may vary due to installation variables including optics, mounting/ceiling height, dirt depreciation, light loss factor, etc.; highly recommended to confirm performance with a layout - contact Applications at signify.com/outdoorluminaires. Consult DLC QPL to confirm your specific fixture selection is DLC approved.

Note: Some data may be scaled based on tests of similar but not identical luminaries.

RFM RoadFocus LED Cobrahead (medium)

Roadway

Field Adjustable Wattage (FAWS) Multiplier Chart

FAWS Position	Typical Delivered Lumens Multiplier	Typical System wattage
1	0.31	0.28
2	0.53	0.50
3	0.62	0.58
4	0.70	0.67
5	0.78	0.75
6	0.83	0.81
7	0.89	0.87
8	0.92	0.91
9	0.96	0.95
10	1.00	1.00

Note: Typical value accuracy +/- 5%

Dimensions

Side View

Weight: 12.2 Lbs
EPA: 0.53 sq. ft.

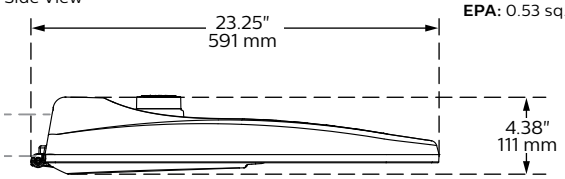

Bottom View

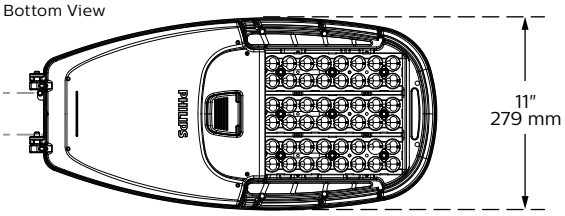

Specifications

Housing

Made of a low copper die cast Aluminum alloy (A360), 0.100" (2.5mm) minimum thickness. Fits on a 1.66" (42mm) O.D. (1.25" NPS), 1.9" (48mm) O.D. (1.5" NPS) or 2 3/8" (60mm) O.D. (2" NPS) by 5 1/2" (140mm) minimum long tenon. Comes with a zinc plated clamp fixed by 2 zinc plated hexagonal bolts 3/8 16 UNC for ease of installation. Provides an easy step adjustment of +/- 5° tilt in 2.5º increments. Includes integral bubble level standard (always included). A quick release, tool less entry, single latch, hinged, removable door opens downward to provide access to electronic components and to a terminal block. Door is secured to prevent accidental dropping or disengagement. A clearance of 13" (330mm) at the rear is required in order to remove the door. Complete with a bird guard protecting against birds and similar intruders and an ANSI label as per C136.15-2015 to identify wattage and source (both included in box). Housing (including electrical compartment) rated IP54 per ANSI C136.37.

Light Engine

Composed of 4 main components: LED Module / Optical System / Heat Sink / Driver.

Electrical components are RoHS compliant, IP66 sealed light engine LEDs tested by ISO 17025-2005 accredited lab in accordance with IESNA LM-80 guidelines in compliance with EPA ENERGY STAR, extrapolations in accordance with IESNA TM-21. Metal core board ensures greater heat transfer and longer lifespan.

LED Module: Composed of high-performance white LEDs. Color temperature as per ANSI/NEMA bin 2700 Kelvin nominal (2725 ±145K) CRI 80 min, 3000 Kelvin nominal (3045K +/- 175K) or 4000 Kelvin nominal (3985K +/- 275K), CRI 70 Min. 75 Typical. Other CCT/CRI also available, consult factory.

Optical System: Composed of high performance UV stabilized optical grade polymer refractor lenses to achieve desired distribution optimized to get maximum spacing, target lumens and a superior lighting uniformity. System is rated IP66. Performance shall be tested per LM-63, LM-79 and TM-15 (IESNA) certifying its photometric performance. 0% uplight and U0 per IESNA TM-15.

Heat Sink: Built in the housing, designed to ensure high efficacy and superior cooling by natural vertical convection air flow pattern always close to LEDs and driver optimizing their efficiency and life. Product does not use any cooling device with moving parts (only passive cooling). Wide openings enable natural cleaning and removal of dirt and debris. Entire luminaire is rated for operation in ambient temperature of -40°C / -40°F up to +40°C / +104°F. +50°C / +122°F also available, consult factory.

Driver: High power factor of 90% min. Electronic driver, operating range 50/60 Hz. Auto adjusting universal voltage input from 120 to 277 or 347 to 480 VAC rated for both application line to line or line to neutral, Class I, THD of 20% max.

DMG: Dimming compatible 0-10 volts.
The current supplying the LEDs will be reduced by the driver if the driver experiences internal overheating as a protection to the LEDs and the electrical components. Output is protected from short circuits, voltage overload and current overload. Automatic recovery after correction. Standard built in driver surge protection of 2.5kV (min).

Integrated Features

DMG: Dimmable driver 0-10V.

RCD7*: Tool less orientable receptacle with 7 pins enabling dimming and additional functionality (to be determined), can be used with a twist lock Interact City node or photoelectric cell or a shorting cap.

SP1: Surge protection device tested in accordance with ANSI/IEEE C62.45 per ANSI/IEEE C62.41.2 Scenario I Category C High Exposure 10kV/10kA waveforms for Line-Ground, Line-Neutral and Neutral-Ground, and in accordance with DOE MSSLC Model Specification for LED Roadway Luminaires Appendix D Electrical Immunity High test level 10kV/10kA.

Please note that these integrated features always come with RoadFocus luminaire.

** Use of photoelectric cell or shorting cap is required to ensure proper illumination.*

RFM RoadFocus LED Cobrahead (medium)

Roadway

Specifications (continued)

Driver and Luminaire Options

DALI: Pre-set driver compatible with the DALI control system.

SRD: Sensor Ready Driver including SR communication (used for dimming and other functionalities), 24V auxiliary supply and a logical signal input (LSI) connected to the top NEMA twist lock receptacle and bottom TLRSR receptacle, if this option included/chosen. This configuration is compatible with Interact City controllers.

SRD1: Sensor Ready Driver including SR communication (used for dimming and other functionalities) but with 24V auxiliary supply and a logical signal input (LSI) not connected to the top NEMA twist lock. If TLRSR receptacle option included, standard SR communication, 24V auxiliary supply and LSI are connected to the TLRSR receptacle.

FAWS: Field Adjustable Wattage Selector, pre-set to the highest position, can be easily switched in the field to the required position. This reduces total luminaire wattage consumption and reduces the light level – see the FAWS multiplier chart for more details.

Note: It is not recommended to use FAWS with other dimming or controls; if you do, set the switch to position 10 (maximum output) to enable the other dimming or controls. Switching FAWS to any position other than 10 will disable the other dimming or controls.

SP2: 20kV / 10kA surge protection device that provides extra protection beyond the SP1 10kV/10kA level.

NRC: No Receptacle. Fixture is shipped with a cap instead of a receptacle.

NYBC: 4-position terminal block

RCD*: Tool Less orientable receptacle with 5 pins enabling dimming, can be used with a twist lock Interact City or photoelectric cell or a shorting cap.

TLRSR: SR Sensor connector, installed in fixture door. Shipped with protective cover.

HS: House side shield, 1 per 16 LED light engine.

PH8: Twist-lock Photoelectric Cell, UNV (120-277VAC).

PH8/347: Twist-lock Photoelectric Cell, HVU (347VAC).

PH8/480: Twist-lock Photoelectric Cell, HVU (480VAC).

PHXL: Twist-lock Photoelectric Cell, extended life, UNV (120-277VAC).

PH9: Shorting cap.

API: Factory Installed NEMA label, ANSI C136.15-2015 compliant. Consult factory for other labeling needs.

** Use of photoelectric cell or shorting cap is required to ensure proper illumination.*

Luminaire Useful Life

Refer to IES files for energy consumption and delivered lumens for each option. Based on ISTMT in situ thermal testing in accordance with UL1598 and UL8750, System Reliability Tool, Advance data and LED manufacturer LM-80/TM-21 data, expected to reach 100,000 + hours (72W32LED and 108W48LED at 700mA) or 94,500 hours (108W32LED and 160W48LED at 1050mA) with >L70 lumen maintenance @ 25°C. Luminaire Useful Life accounts for LED lumen maintenance AND all of these additional factors including: LED life, driver life, PCB substrate, solder joints, on/off cycles, burning hours and corrosion.

Wiring

The connection of the luminaire is done using a terminal block connector 600V, 85A for use with #2 14 AWG. wires from the primary circuit, located inside the housing. Due to the inrush current that occurs with electronic drivers, recommend using a 10Amp time-delay fuse to avoid unwanted fuse blowing (false tripping) that can occur with normal or fast acting fuses.

Hardware

All exposed screws shall be complete with Ceramic primer seal to reduce seizing of the parts, also offers a high resistance to corrosion. All seals and sealing devices are made and/or lined with EPDM and/or silicone and/or rubber.

Finish

Color in accordance with the AAMA 2603 standard. Application of polyester powder coat paint (4 mils/100 microns) with ± 1 mils/24 microns of tolerance. The Thermosetting resins provides a discoloration resistant finish in accordance with the ASTM D2244 standard, as well as luster retention in keeping with the ASTM D523 standard and humidity proof in accordance with the ASTM D2247 standard.

The surface treatment achieves a minimum of 3000 hours for salt spray resistant finish in accordance with testing performed and per ASTM B117 standard.

LED products manufacturing standard

The electronic components sensitive to electrostatic discharge (ESD) such as light emitting diodes (LEDs) are assembled in compliance with IEC61340-5-1 and ANSI/ESD S20.20 standards so as to eliminate ESD events that could decrease the useful life of the product.

Vibration Resistance

The RFM meets the ANSI C136.31, American National Standard for Roadway Luminaire Vibration specifications for Bridge/overpass applications. (Tested for 3G over 100,000 cycles by independent lab)

Certifications and Compliance

cULus Listed for Canada and USA. Luminaire meets DOE and MSSLC Model Specification for LED Roadway Luminaires. Most versions of RoadFocus LED Cobrahead luminaires are DesignLights Consortium qualified, consult DLC QPL to confirm your specific fixture selection is approved. CCTs 3000K and warmer are Dark Sky Approved. Luminaire complies with or exceeds the following ANSI C136 standards: .2, .3, .10, .14, .15, .22, .25, .31, .37, .41.

Service Tag

Each individual luminaire is uniquely identifiable, thanks to the Service tag application. With a simple scan of a QR code, placed on the inside of the mast door, you gain instant access to the luminaire configuration, making installation and maintenance operations faster and easier, no matter what stage of the luminaire's lifetime. Just download the APP and register your product right away.

For more details visit: **signify.com/servicetag**

Limited Warranty

10-year limited warranty.
See **signify.com/warranties** for details and restrictions.

Brackets/Arms

For brackets / arms available with this luminaire, see Lumec 3D for details.

signify

©2019 Signify Holding. All rights reserved. This document may be subject to change. No representation or warranty as to the accuracy or completeness of the information included herein is given and any liability for any action in reliance thereon is disclaimed. All trademarks are owned by Signify Holding or their respective owners.

Signify North America Corporation
200 Franklin Square Drive,
Somerset, NJ 08873
Telephone 855-486-2216

Signify Canada Ltd.
281 Hillmount Road,
Markham, ON, Canada L6C 2S3
Telephone 800-668-9008

LUMEC by signify

Roadway

RoadFocus

RFS Cobra head (small)

Project:

Location:

Cat.No:

Type:

Lumens: Qty:

Notes:

Lumec RoadFocus LED cobra head luminaires feature a sleek design that provides seamless replacement of existing HID luminaires. RoadFocus is available in three sizes, offers multiple lumen packages, and a complete array of optical distributions, making it an outstanding solution for all types of roadway applications. Includes Service Tag, innovative way to provide assistance throughout the life of the product.

Ordering guide

example: RFS-35W16LED4K-G2-R2M-UNV-DMG-HS-PH8-RCD7-GY3

Series	LED module	CCT	Generation	Distribution	Voltage	Options: Controls [4]	Options: Options	Finish
RFS			G2					
RFS RoadFocus small	**15W12LED** **20W12LED** **25W12LED** **25W16LED** **30W16LED** **35W16LED** **45W16LED** **50W16LED** **54W16LED** **60W16LED**[7] **20W20LED**[13] **40W20LED**[13] **65W20LED**[13] **35W32LED** **55W32LED** **60W32LED** **72W32LED** **108W32LED**[7] **35W40LED**[13] **50W40LED**[13] **55W40LED**[13] **65W40LED**[13] **80W40LED**[13] **100W40LED**[7,13]	**4K** 4000K **3K** 3000K **2.7K**[11] 2700K	**G2** Generation 2	**Type 2** **R2S** Type II short (ASYM) **R2M** Type II Medium (ASYM) **Type 3** **R3S** Type III short (ASYM) **R3M** Type III Medium (ASYM) **Type 4** **4** Type IV (ASYM) **Type 5** **5**[2] Type V (SYMM)	**UNV** 120-277V **HVU** 347-480V	**DALI**[1] Digitally addressable lighting interface **DMG**[5] 0-10V **SRD**[1] Sensor ready driver, standard configuration **SRD1**[1] Sensor ready driver, alternate configuration	**API** Factory installed NEMA label, ANSI C136.15-2015 compliant **FAWS**[7] Field adjustable wattage selector **HS** House Side Shield, 1 per 16 LED light engine **NRC**[8] No receptacle **NYBC** 4-position terminal block **PH8**[1,10] Twist-lock photoelectric cell, UNV (120-277VAC) **PH8/347**[10,12] Twist-lock photoelectric cell (347VAC) **PH8/480**[10,12] Twist-lock photoelectric cell (480VAC) **PHXL**[1,10] Twist-lock photoelectric cell, extended life, UNV (120-277VAC) **PH9**[10] Shorting cap **RCD**[3,9] Tool less receptacle for twist-lock photocell or shorting cap, 5-pin (optional) **RCD7**[3,5] Tool less receptacle for twist-lock photocell or shorting cap, 7-pin (standard) **SP2** 20kV / 10kA Surge protector **TLRSR**[6] SR receptacle	**BK** Black **BR** Bronze **GY3** Gray **WH** White

1. Not available with **HVU**.
2. Not available with **HS** option.
3. Use of photoelectric cell or shorting cap is required to ensure proper illumination.
4. Select either **DALI** or **DMG** or **SRD** or **SRD1** mandatory option.
5. Please note this integrated feature come standard with RoadFocus.
6. Only available with **SRD** or **SRD1** Driver Options.
7. Only available with **DMG** Driver Options.
8. Not available with **PH8**, **PH8/347**, **PH8/480**, **PHXL**, **PH9**, **DALI**, **SRD** or **SRD1** Driver Options.
9. Not available with **SRD** Driver Options.
10. Either **RCD** or **RCD7** must be selected for this option.
11. Extended lead-time may apply. Consult factory.
12. Not available with **UNV**.
13. Only available with R2M or R3M distributions.

Accessories (must be ordered as separate line item - quickly and easily installed in the field)

Interact City connector node*

*Contact the factory for additional support when connected lighting or additional services are desired.

RFS RoadFocus

LED Cobra head (small)

Predicted Lumen Depreciation Data

Predicted performance derived from LED manufacturer's data and engineering design estimates, based on IESNA LM-80 methodology. Actual experience may vary due to field application conditions. L_{70} is the predicted time when LED performance depreciates to 70% of initial lumen output. Calculated per IESNA TM21-11 Addendum B. Published L_{70} hours limited to 6 times actual LED test hours.

Ambient Temperature °C	L_{70} per TM-21	Lumen Maintenance % at 60,000 hrs
25°C	>60,000 hours	>97.6%

LED Wattage values

Ordering Code	Total LEDs	Average System Watts[14]	Wattage label[15]
RFS-15W12LED	12	14	10
RFS-20W12LED	12	19	20
RFS-25W12LED	12	25	20
RFS-25W16LED	16	24	20
RFS-30W16LED	16	29	30
RFS-35W16LED	16	38	40
RFS-45W16LED	16	45	50
RFS-50W16LED	16	50	50
RFS-54W16LED	16	53	50
RFS-60W16LED	16	61	60
RFS-20W20LED	20	20	20
RFS-40W20LED	20	40	40
RFS-65W20LED	20	64	60

Ordering Code	Total LEDs	Average System Watts[14]	Wattage label[15]
RFS-35W32LED	32	37	40
RFS-55W32LED	32	53	50
RFS-60W32LED	32	59	60
RFS-72W32LED	32	73	70
RFS-108W32LED	32	108	110
RFS-35W40LED	40	35	40
RFS-50W40LED	40	49	50
RFS-55W40LED	40	54	50
RFS-65W40LED	40	66	70
RFS-80W40LED	40	79	80
RFS-100W40LED	40	101	100

14. Typical values, rounded.
15. As per ANSI C136.15-2015. Consult factory for other labeling needs.

4000K LED Lumen values

		Type R2M			Type R2S			Type R3M			Type R3S			Type 4			Type 5		
Ordering Code	Color Temp.	Lumen Output	Efficacy (LPW)	BUG Rating	Lumen Output	Efficacy (LPW)	BUG Rating	Lumen Output	Efficacy (LPW)	BUG Rating	Lumen Output	Efficacy (LPW)	BUG Rating	Lumen Output	Efficacy (LPW)	BUG Rating	Lumen Output	Efficacy (LPW)	BUG Rating
RFS-15W12LED	4000	1,863	132	B1-U0-G1	1,940	138	B1-U0-G1	1,858	132	B1-U0-G1	1,882	134	B1-U0-G1	1,849	131	B1-U0-G1	1,924	137	B1-U0-G1
RFS-20W12LED	4000	2,525	130	B1-U0-G1	2,629	136	B1-U0-G1	2,518	130	B1-U0-G1	2,552	132	B1-U0-G1	2,506	129	B1-U0-G1	2,606	134	B1-U0-G1
RFS-25W12LED	4000	2,887	116	B1-U0-G1	3,005	121	B1-U0-G1	2,878	116	B1-U0-G1	2,916	117	B1-U0-G1	2,864	115	B1-U0-G1	2,979	120	B1-U0-G1
RFS-25W16LED	4000	3,323	137	B1-U0-G1	3,458	143	B1-U0-G1	3,312	137	B1-U0-G1	3,357	139	B1-U0-G1	3,296	136	B1-U0-G1	3,429	142	B1-U0-G1
RFS-30W16LED	4000	3,764	130	B1-U0-G1	3,918	136	B1-U0-G1	3,752	130	B1-U0-G1	3,802	132	B1-U0-G1	3,735	129	B1-U0-G1	3,884	135	B1-U0-G1
RFS-35W16LED	4000	4,810	127	B1-U0-G1	5,007	132	B1-U0-G1	4,795	126	B1-U0-G1	4,859	128	B1-U0-G1	4,772	126	B1-U0-G1	4,964	131	B1-U0-G1
RFS-45W16LED	4000	5,497	121	B1-U0-G1	5,722	126	B1-U0-G1	5,480	121	B1-U0-G1	5,554	123	B1-U0-G1	5,454	121	B1-U0-G1	5,673	125	B1-U0-G1
RFS-50W16LED	4000	5,825	116	B2-U0-G1	6,064	121	B2-U0-G1	5,807	116	B2-U0-G1	5,885	117	B2-U0-G1	5,780	115	B2-U0-G1	6,012	120	B2-U0-G1
RFS-54W16LED	4000	6,356	120	B2-U0-G1	6,616	125	B2-U0-G1	6,336	120	B2-U0-G1	6,421	121	B2-U0-G1	6,306	119	B2-U0-G1	6,560	124	B2-U0-G1
RFS-60W16LED	4000	6,929	113	B2-U0-G1	7,213	118	B2-U0-G1	6,907	113	B2-U0-G1	7,000	115	B2-U0-G1	6,875	113	B2-U0-G1	7,151	117	B2-U0-G1
RFS-20W20LED	4000	2,553	130	B1-U0-G1	N/A	N/A	N/A	2,567	131	B1-U0-G1	N/A	N/A	N/A	N/A	N/A	N/A	N/A	N/A	N/A
RFS-40W20LED	4000	5,083	128	B1-U0-G1	N/A	N/A	N/A	5,110	129	B1-U0-G1	N/A	N/A	N/A	N/A	N/A	N/A	N/A	N/A	N/A
RFS-65W20LED	4000	7,827	122	B2-U0-G2	N/A	N/A	N/A	7,869	123	B2-U0-G2	N/A	N/A	N/A	N/A	N/A	N/A	N/A	N/A	N/A
RFS-35W32LED	4000	5,197	141	B1-U0-G1	5,410	146	B1-U0-G1	5,181	140	B1-U0-G1	5,250	142	B1-U0-G1	5,156	139	B1-U0-G1	5,364	145	B1-U0-G1
RFS-55W32LED	4000	7,528	141	B2-U0-G1	7,836	147	B2-U0-G1	7,504	140	B2-U0-G1	7,605	142	B2-U0-G1	7,469	140	B2-U0-G1	7,770	145	B2-U0-G1
RFS-60W32LED	4000	7,630	130	B2-U0-G1	7,943	136	B2-U0-G1	7,607	130	B2-U0-G1	7,709	132	B2-U0-G1	7,571	129	B2-U0-G1	7,875	134	B2-U0-G1
RFS-72W32LED	4000	9,408	129	B2-U0-G2	9,794	134	B2-U0-G2	9,379	128	B2-U0-G2	9,505	130	B2-U0-G2	9,336	128	B2-U0-G2	9,711	133	B2-U0-G2
RFS-108W32LED	4000	13,025	121	B3-U0-G2	13,559	126	B3-U0-G2	12,984	120	B3-U0-G2	13,158	122	B3-U0-G2	12,924	120	B3-U0-G2	13,443	124	B3-U0-G2
RFS-35W40LED	4000	5,472	155	B1-U0-G1	N/A	N/A	N/A	5,502	156	B1-U0-G1	N/A	N/A	N/A	N/A	N/A	N/A	N/A	N/A	N/A
RFS-50W40LED	4000	7,319	150	B2-U0-G2	N/A	N/A	N/A	7,359	151	B2-U0-G2	N/A	N/A	N/A	N/A	N/A	N/A	N/A	N/A	N/A
RFS-55W40LED	4000	7,675	141	B2-U0-G2	N/A	N/A	N/A	7,716	142	B2-U0-G2	N/A	N/A	N/A	N/A	N/A	N/A	N/A	N/A	N/A
RFS-65W40LED	4000	9,024	137	B2-U0-G2	N/A	N/A	N/A	9,073	137	B2-U0-G2	N/A	N/A	N/A	N/A	N/A	N/A	N/A	N/A	N/A
RFS-80W40LED	4000	10,546	133	B2-U0-G2	N/A	N/A	N/A	10,603	134	B2-U0-G2	N/A	N/A	N/A	N/A	N/A	N/A	N/A	N/A	N/A
RFS-100W40LED	4000	12,861	127	B3-U0-G3	N/A	N/A	N/A	12,930	128	B3-U0-G2	N/A	N/A	N/A	N/A	N/A	N/A	N/A	N/A	N/A

Actual performance may vary due to installation variables including optics, mounting/ceiling height, dirt depreciation, light loss factor, etc.; highly recommended to confirm performance with a layout - contact Applications at signify.com/outdoorluminaires. Consult DLC QPL to confirm your specific fixture selection is DLC approved.

Note: Some data may be scaled based on tests of similar but not identical luminaries.

RFS RoadFocus

LED Cobra head (small)

3000K LED Lumen values

		Type R2M			Type R2S			Type R3M			Type R3S			Type 4			Type 5		
Ordering Code	Color Temp.	Lumen Output	Efficacy (LPW)	BUG Rating	Lumen Output	Efficacy (LPW)	BUG Rating	Lumen Output	Efficacy (LPW)	BUG Rating	Lumen Output	Efficacy (LPW)	BUG Rating	Lumen Output	Efficacy (LPW)	BUG Rating	Lumen Output	Efficacy (LPW)	BUG Rating
RFS-15W12LED	3000	1,748	124	B1-U0-G1	1,820	129	B1-U0-G0	1,743	124	B1-U0-G1	1,766	125	B0-U0-G0	1,735	123	B0-U0-G1	1,805	128	B1-U0-G0
RFS-20W12LED	3000	2,369	122	B1-U0-G1	2,466	127	B1-U0-G0	2,362	122	B1-U0-G1	2,394	123	B1-U0-G1	2,351	121	B1-U0-G1	2,445	126	B2-U0-G1
RFS-25W12LED	3000	2,708	109	B1-U0-G1	2,819	113	B1-U0-G0	2,700	108	B1-U0-G1	2,736	110	B1-U0-G1	2,687	108	B1-U0-G1	2,795	112	B2-U0-G1
RFS-25W16LED	3000	3,117	129	B1-U0-G1	3,244	134	B1-U0-G0	3,107	128	B1-U0-G1	3,149	130	B1-U0-G1	3,092	128	B1-U0-G1	3,217	133	B2-U0-G1
RFS-30W16LED	3000	3,531	122	B1-U0-G1	3,676	127	B1-U0-G0	3,520	122	B1-U0-G1	3,567	124	B1-U0-G1	3,504	121	B1-U0-G1	3,644	126	B2-U0-G1
RFS-35W16LED	3000	4,512	119	B1-U0-G1	4,697	124	B1-U0-G1	4,498	118	B1-U0-G1	4,558	120	B1-U0-G1	4,477	118	B1-U0-G1	4,657	123	B3-U0-G1
RFS-45W16LED	3000	5,157	114	B1-U0-G1	5,368	119	B1-U0-G1	5,141	114	B1-U0-G1	5,210	115	B1-U0-G1	5,117	113	B1-U0-G2	5,322	118	B3-U0-G1
RFS-50W16LED	3000	5,465	109	B1-U0-G1	5,689	113	B1-U0-G1	5,448	109	B1-U0-G1	5,521	110	B1-U0-G1	5,422	108	B1-U0-G2	5,640	112	B3-U0-G1
RFS-54W16LED	3000	5,963	113	B2-U0-G1	6,207	117	B2-U0-G1	5,944	112	B1-U0-G1	6,024	114	B1-U0-G1	5,916	112	B1-U0-G2	6,154	116	B3-U0-G1
RFS-60W16LED	3000	6,500	106	B2-U0-G1	6,767	111	B2-U0-G1	6,480	106	B2-U0-G1	6,567	107	B1-U0-G2	6,450	106	B1-U0-G2	6,709	110	B3-U0-G1
RFS-20W20LED	3000	2,427	124	B1-U0-G1	N/A	N/A	N/A	2,440	124	B1-U0-G1	N/A	N/A	N/A	N/A	N/A	N/A	N/A	N/A	N/A
RFS-40W20LED	3000	4,833	122	B1-U0-G1	N/A	N/A	N/A	4,859	122	B1-U0-G1	N/A	N/A	N/A	N/A	N/A	N/A	N/A	N/A	N/A
RFS-65W20LED	3000	7,442	116	B2-U0-G2	N/A	N/A	N/A	7,482	117	B2-U0-G2	N/A	N/A	N/A	N/A	N/A	N/A	N/A	N/A	N/A
RFS-35W32LED	3000	4,875	132	B1-U0-G1	5,075	137	B1-U0-G1	4,860	131	B1-U0-G1	4,925	133	B1-U0-G1	4,837	131	B1-U0-G1	5,032	136	B3-U0-G1
RFS-55W32LED	3000	7,062	132	B2-U0-G1	7,351	137	B2-U0-G1	7,040	132	B2-U0-G1	7,134	133	B1-U0-G2	7,007	131	B1-U0-G2	7,289	136	B3-U0-G1
RFS-60W32LED	3000	7,158	122	B2-U0-G1	7,452	127	B2-U0-G1	7,136	122	B2-U0-G1	7,232	123	B1-U0-G2	7,103	121	B1-U0-G2	7,388	126	B3-U0-G1
RFS-72W32LED	3000	8,826	121	B2-U0-G2	9,188	126	B2-U0-G1	8,799	121	B2-U0-G2	8,917	122	B1-U0-G2	8,758	120	B2-U0-G2	9,110	125	B3-U0-G2
RFS-108W32LED	3000	12,219	113	B3-U0-G2	12,720	118	B3-U0-G2	12,181	113	B2-U0-G2	12,344	114	B2-U0-G2	12,124	112	B2-U0-G2	12,611	117	B4-U0-G2
RFS-35W40LED	3000	5,203	147	B1-U0-G1	N/A	N/A	N/A	5,231	148	B1-U0-G1	N/A	N/A	N/A	N/A	N/A	N/A	N/A	N/A	N/A
RFS-50W40LED	3000	6,959	143	B2-U0-G2	N/A	N/A	N/A	6,996	144	B2-U0-G1	N/A	N/A	N/A	N/A	N/A	N/A	N/A	N/A	N/A
RFS-55W40LED	3000	7,297	134	B2-U0-G2	N/A	N/A	N/A	7,336	135	B2-U0-G2	N/A	N/A	N/A	N/A	N/A	N/A	N/A	N/A	N/A
RFS-65W40LED	3000	8,580	130	B2-U0-G2	N/A	N/A	N/A	8,626	131	B2-U0-G2	N/A	N/A	N/A	N/A	N/A	N/A	N/A	N/A	N/A
RFS-80W40LED	3000	10,027	127	B2-U0-G2	N/A	N/A	N/A	10,081	128	B2-U0-G2	N/A	N/A	N/A	N/A	N/A	N/A	N/A	N/A	N/A
RFS-100W40LED	3000	12,228	121	B3-U0-G3	N/A	N/A	N/A	12,294	122	B3-U0-G2	N/A	N/A	N/A	N/A	N/A	N/A	N/A	N/A	N/A

2700K LED Lumen values

		Type R2M			Type R2S			Type R3M			Type R3S			Type 4			Type 5		
Ordering Code	Color Temp.	Lumen Output	Efficacy (LPW)	BUG Rating	Lumen Output	Efficacy (LPW)	BUG Rating	Lumen Output	Efficacy (LPW)	BUG Rating	Lumen Output	Efficacy (LPW)	BUG Rating	Lumen Output	Efficacy (LPW)	BUG Rating	Lumen Output	Efficacy (LPW)	BUG Rating
RFS-15W12LED	2700	1,603	114	B1-U0-G1	1,669	119	B1-U0-G0	1,598	113	B1-U0-G1	1,619	115	B0-U0-G0	1,591	113	B0-U0-G1	1,655	118	B1-U0-G0
RFS-20W12LED	2700	2,172	112	B1-U0-G1	2,261	117	B1-U0-G0	2,166	112	B1-U0-G1	2,195	113	B1-U0-G1	2,156	111	B1-U0-G1	2,242	116	B2-U0-G1
RFS-25W12LED	2700	2,483	100	B1-U0-G1	2,585	104	B1-U0-G0	2,476	99	B1-U0-G1	2,509	101	B1-U0-G1	2,464	99	B1-U0-G1	2,563	103	B2-U0-G1
RFS-25W16LED	2700	2,858	118	B1-U0-G1	2,975	123	B1-U0-G0	2,849	118	B1-U0-G1	2,888	119	B1-U0-G1	2,835	117	B1-U0-G1	2,950	122	B2-U0-G1
RFS-30W16LED	2700	3,238	112	B1-U0-G1	3,371	117	B1-U0-G0	3,228	112	B1-U0-G1	3,271	113	B1-U0-G1	3,213	111	B1-U0-G1	3,342	116	B2-U0-G1
RFS-35W16LED	2700	4,138	109	B1-U0-G1	4,307	113	B1-U0-G1	4,125	109	B1-U0-G1	4,180	110	B1-U0-G1	4,105	108	B1-U0-G1	4,271	112	B3-U0-G1
RFS-45W16LED	2700	4,729	104	B1-U0-G1	4,923	109	B1-U0-G1	4,714	104	B1-U0-G1	4,778	106	B1-U0-G1	4,692	104	B1-U0-G2	4,880	108	B3-U0-G1
RFS-50W16LED	2700	5,012	100	B1-U0-G1	5,217	104	B1-U0-G1	4,996	100	B1-U0-G1	5,063	101	B1-U0-G1	4,972	99	B1-U0-G2	5,172	103	B3-U0-G1
RFS-54W16LED	2700	5,468	103	B2-U0-G1	5,692	107	B2-U0-G1	5,451	103	B1-U0-G1	5,524	104	B1-U0-G1	5,425	102	B1-U0-G2	5,643	106	B3-U0-G1
RFS-60W16LED	2700	5,961	98	B2-U0-G1	6,205	102	B2-U0-G1	5,942	97	B2-U0-G1	6,022	99	B1-U0-G2	5,915	97	B1-U0-G2	6,152	101	B3-U0-G1
RFS-20W20LED	2700	2,218	113	B1-U0-G1	N/A	N/A	N/A	2,230	114	B1-U0-G1	N/A	N/A	N/A	N/A	N/A	N/A	N/A	N/A	N/A
RFS-40W20LED	2700	4,416	111	B1-U0-G1	N/A	N/A	N/A	4,440	112	B1-U0-G1	N/A	N/A	N/A	N/A	N/A	N/A	N/A	N/A	N/A
RFS-65W20LED	2700	6,800	106	B2-U0-G2	N/A	N/A	N/A	6,837	107	B2-U0-G1	N/A	N/A	N/A	N/A	N/A	N/A	N/A	N/A	N/A
RFS-35W32LED	2700	4,470	121	B1-U0-G1	4,654	126	B1-U0-G1	4,457	121	B1-U0-G1	4,516	122	B1-U0-G1	4,436	120	B1-U0-G1	4,614	125	B3-U0-G1
RFS-55W32LED	2700	6,476	121	B2-U0-G1	6,741	126	B2-U0-G1	6,456	121	B2-U0-G1	6,542	122	B1-U0-G2	6,426	120	B1-U0-G2	6,684	125	B3-U0-G1
RFS-60W32LED	2700	6,564	112	B2-U0-G1	6,834	117	B2-U0-G1	6,544	112	B2-U0-G1	6,632	113	B1-U0-G2	6,514	111	B1-U0-G2	6,775	116	B3-U0-G1
RFS-72W32LED	2700	8,094	111	B2-U0-G2	8,426	115	B2-U0-G1	8,069	111	B2-U0-G2	8,177	112	B1-U0-G2	8,031	110	B2-U0-G2	8,354	114	B3-U0-G2
RFS-108W32LED	2700	11,205	104	B3-U0-G2	11,664	108	B3-U0-G2	11,170	103	B2-U0-G2	11,320	105	B2-U0-G2	11,118	103	B2-U0-G2	11,565	107	B4-U0-G2
RFS-35W40LED	2700	4,754	135	B1-U0-G1	N/A	N/A	N/A	4,780	135	B1-U0-G1	N/A	N/A	N/A	N/A	N/A	N/A	N/A	N/A	N/A
RFS-50W40LED	2700	6,359	131	B2-U0-G2	N/A	N/A	N/A	6,393	131	B2-U0-G1	N/A	N/A	N/A	N/A	N/A	N/A	N/A	N/A	N/A
RFS-55W40LED	2700	6,667	123	B2-U0-G2	N/A	N/A	N/A	6,703	123	B2-U0-G1	N/A	N/A	N/A	N/A	N/A	N/A	N/A	N/A	N/A
RFS-65W40LED	2700	7,840	119	B2-U0-G2	N/A	N/A	N/A	7,882	119	B2-U0-G2	N/A	N/A	N/A	N/A	N/A	N/A	N/A	N/A	N/A
RFS-80W40LED	2700	9,162	116	B2-U0-G2	N/A	N/A	N/A	9,211	117	B2-U0-G2	N/A	N/A	N/A	N/A	N/A	N/A	N/A	N/A	N/A
RFS-100W40LED	2700	11,173	111	B2-U0-G2	N/A	N/A	N/A	11,233	111	B2-U0-G2	N/A	N/A	N/A	N/A	N/A	N/A	N/A	N/A	N/A

Actual performance may vary due to installation variables including optics, mounting/ceiling height, dirt depreciation, light loss factor, etc.; highly recommended to confirm performance with a layout - contact Applications at signify.com/outdoorluminaires. Consult DLC QPL to confirm your specific fixture selection is DLC approved.

Note: Some data may be scaled based on tests of similar but not identical luminaries.

RFS RoadFocus

LED Cobra head (small)

Dimensions

Side View

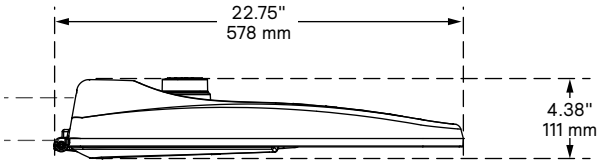

Bottom View

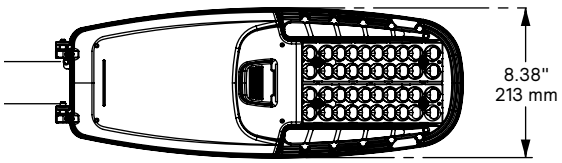

Weight: 9.4 lbs

EPA: 0.52 sq. feet

Field Adjustable Wattage (FAWS) Multiplier Chart

FAWS Position	Typical Delivered Lumens Multiplier	Typical System wattage
1	0.31	0.28
2	0.53	0.50
3	0.62	0.58
4	0.70	0.67
5	0.78	0.75
6	0.83	0.81
7	0.89	0.87
8	0.92	0.91
9	0.96	0.95
10	1.00	1.00

Note: Typical value accuracy +/- 5%

Specifications

Housing

Made of a low copper die cast Aluminum alloy (A360), 0.100" (2.5mm) minimum thickness. Fits on a 1.66" (42mm) O.D. (1.25" NPS), 1.9" (48mm) O.D. (1.5" NPS) or 2 3/8" (60mm) O.D. (2" NPS) by 5 1/2" (140mm) minimum long tenon. Comes with a zinc plated clamp fixed by 2 zinc plated hexagonal bolts 3/8 16 UNC for ease of installation. Provides an easy step adjustment of +/- 5° tilt in 2.5° increments. Includes integral bubble level standard (always included). A quick release, tool less entry, single latch, hinged, removable door opens downward to provide access to electronic components and to a terminal block. Door is secured to prevent accidental dropping or disengagement. A clearance of 13" (330mm) at the rear is required in order to remove the door. Complete with a bird guard protecting against birds and similar intruders and an ANSI label as per C136.15-2015 to identify wattage and source (both included in box). Housing (including electrical compartment) rated IP54 per ANSI C136.37.

Light Engine

Composed of 4 main components: LED Module / Optical System / Heat Sink / Driver.

Electrical components are RoHS compliant, IP66 sealed light engine equipped LEDs tested by ISO 17025-2005 accredited lab in accordance with IESNA LM-80 guidelines in compliance with EPA ENERGY STAR, extrapolations in accordance with IESNA TM-21. Metal core board ensures greater heat transfer and longer lifespan.

LED Module: Composed of high-performance white LEDs. Color temperature as per ANSI/NEMA bin 2700 Kelvin nominal (2725 ±145K), 3000 Kelvin nominal (3045K +/- 175K) or 4000 Kelvin nominal (3985K +/- 275K), CRI 70 Min. 75 Typical. Other CCT/CRI also available, consult factory.

Optical System: Composed of high performance UV stabilized optical grade polymer refractor lenses to achieve desired distribution optimized to get maximum spacing, target lumens and a superior lighting uniformity. System is rated IP66. Performance shall be tested per LM-63, LM-79 and TM-15 (IESNA) certifying its photometric performance. 0% uplight and U0 per IESNA TM-15.

Heat Sink: Built in the housing, designed to ensure high efficacy and superior cooling by natural vertical convection air flow pattern always close to LEDs and driver optimising their efficiency and life. Product does not use any cooling device with moving parts (only passive cooling). Wide openings enable natural cleaning and removal of dirt and debris. Entire luminaire is rated for operation in ambient temperature of -40°C / -40°F up to +50°C / +122°F.

Driver: High power factor of 90% min. Electronic driver, operating range 50/60 Hz. Auto adjusting universal voltage input from 120 to 277 VAC rated for both application line to line or line to neutral, Class I or 2, THD of 20% max.

DMG: Dimming compatible 0-10 volts.
The current supplying the LEDs will be reduced by the driver if the driver experiences internal overheating as a protection to the LEDs and the electrical components. Output is protected from short circuits, voltage overload and current overload. Automatic recovery after correction. Standard built in driver surge protection of 2.5kV (min).

Integrated Features

DMG: Dimmable driver 0-10V.

RCD7*: Tool less orientable receptacle with 7 pins enabling dimming and additional functionality (to be determined), can be used with a twist lock Interact City node or photoelectric cell or a shorting cap.

Please note: Additional hardware will be required to utilize the additional 2 pins on this receptacle.

SP1: Surge protection device tested in accordance with ANSI/IEEE C62.45 per ANSI/IEEE C62.41.2 Scenario I Category C High Exposure 10kV/10kA waveforms for Line-Ground, Line-Neutral and Neutral-Ground, and in accordance with DOE MSSLC Model Specification for LED Roadway Luminaires Appendix D Electrical Immunity High test level 10kV/10kA.

Please note that these integrated features always come with RoadFocus luminaire.

* Use of photoelectric cell or shorting cap is required to ensure proper illumination.

RFS RoadFocus

LED Cobra head (small)

Specifications (continued)

Driver and Luminaire Options

DALI: Pre-set driver compatible with the DALI control system.

SRD: Sensor Ready Driver including SR communication (used for dimming and other functionalities), 24V auxiliary supply and a logical signal input (LSI) connected to the top NEMA twist lock receptacle and bottom TLRSR receptacle, if this option included/chosen. This configuration is compatible with Interact City controllers.

SRD1: Sensor Ready Driver including SR communication (used for dimming and other functionalities) but with 24V auxiliary supply and a logical signal input (LSI) not connected to the top NEMA twist lock. If TLRSR receptacle option included, standard SR communication, 24V auxiliary supply and LSI are connected to the TLRSR receptacle.

FAWS: Field Adjustable Wattage Selector, pre-set to the highest position, can be easily switched in the field to the required position. This reduces total luminaire wattage consumption and reduces the light level – see the FAWS multiplier chart for more details.

Note: It is not recommended to use FAWS with other dimming or controls; if you do, set the switch to position 10 (maximum output) to enable the other dimming or controls. Switching FAWS to any position other than 10 will disable the other dimming or controls.

NRC: No Receptacle. Fixture is shipped with a cap instead of a receptacle.

NYBC: 4-position terminal block

SP2: 20kV / 10kA surge protection device that provides extra protection beyond the SP1 10kV/10kA level.

RCD*: Tool Less orientable receptacle with 5 pins enabling dimming, can be used with a twist lock Interact City or photoelectric cell or a shorting cap.

TLRSR: SR Sensor connector, installed in fixture door. Shipped with protective cover.

HS: House side shield, 1 per 16 LED light engine.

PH8: Twist-lock photoelectric cell, UNV (120-277VAC).

PH8/347: Twist-lock photoelectric cell, UNV (120-277VAC).

PH8/480: Twist-lock photoelectric cell, UNV (120-277VAC).

PHXL: Twist-lock Photoelectric Cell, extended life, UNV (120-277VAC).

PH9*: Shorting cap.

API: Factory Installed NEMA label, ANSI C136.15-2015 compliant. Consult factory for other labeling needs.

* Use of photoelectric cell or shorting cap is required to ensure proper illumination.

Luminaire Useful Life

Refer to IES files for energy consumption and delivered lumens for each option. Based on ISTMT in situ thermal testing in accordance with UL1598 and UL8750, System Reliability Tool, Advance data and LED manufacturer LM-80/TM-21 data, expected to reach 100,000 + hours with >L70 lumen maintenance @ 25°C. Luminaire Useful Life accounts for LED lumen maintenance AND all of these additional factors including: LED life, driver life, PCB substrate, solder joints, on/off cycles, burning hours and corrosion.

Wiring

The connection of the luminaire is done using a terminal block connector 600V, 85A for use with #2 14 AWG. wires from the primary circuit, located inside the housing. Due to the inrush current that occurs with electronic drivers, recommend using a 10Amp time-delay fuse to avoid unwanted fuse blowing (false tripping) that can occur with normal or fast acting fuses.

Hardware

All exposed screws shall be complete with Ceramic primer seal to reduce seizing of the parts, also offers a high resistance to corrosion. All seals and sealing devices are made and/or lined with EPDM and/or silicone and/or rubber.

Finish

Color in accordance with the AAMA 2603 standard. Application of polyester powder coat paint (4 mils/100 microns) with ± 1 mils/24 microns of tolerance. The Thermosetting resins provides a discoloration resistant finish in accordance with the ASTM D2244 standard, as well as luster retention in keeping with the ASTM D523 standard and humidity proof in accordance with the ASTM D2247 standard.

The surface treatment achieves a minimum of 5000 hours for salt spray resistant finish in accordance with testing performed and per ASTM B117 standard.

LED products manufacturing standard

The electronic components sensitive to electrostatic discharge (ESD) such as light emitting diodes (LEDs) are assembled in compliance with IEC61340-5-1 and ANSI/ESD S20.20 standards so as to eliminate ESD events that could decrease the useful life of the product.

Vibration Resistance

The RFS meets the ANSI C136.31-2018, American National Standard for Roadway Luminaire Vibration specifications for Bridge/overpass applications. (Tested for 3G over 100,000 cycles by independent lab)

Certifications and Compliance

cULus Listed for Canada and USA. Luminaire meets DOE and MSSLC Model Specification for LED Roadway Luminaires. Most versions of RoadFocus LED Cobrahead luminaires are DesignLights Consortium qualified, consult DLC QPL to confirm your specific fixture selection is approved. CCTs 3000K and warmer are Dark Sky Approved. Luminaire complies with or exceeds the following ANSI C136 standards: .2, .3, .10, .14, .15, .22, .25, .31, .37, .41.

Service Tag

Each individual luminaire is uniquely identifiable, thanks to the Service tag application. With a simple scan of a QR code, placed on the inside of the mast door, you gain instant access to the luminaire configuration, making installation and maintenance operations faster and easier, no matter what stage of the luminaire's lifetime. Just download the APP and register your product right away.

For more details visit: signify.com/servicetag

Limited Warranty

10-year limited warranty.
See signify.com/warranties for details and restrictions.

Brackets/Arms

For brackets / arms available with this luminaire, see Lumec 3D for details.

signify

©2019 Signify Holding. All rights reserved. This document may be subject to change. No representation or warranty as to the accuracy or completeness of the information included herein is given and any liability for any action in reliance thereon is disclaimed. All trademarks are owned by Signify Holding or their respective owners.

Signify North America Corporation
200 Franklin Square Drive,
Somerset, NJ 08873
Telephone 855-486-2216

Signify Canada Ltd.
281 Hillmount Road,
Markham, ON, Canada L6C 2S3
Telephone 800-668-9008

RSXF2 LED
Floodlight

City of Syracuse streetlighting rebate application

Catalog Number

Notes

Type

Hit the Tab key or mouse over the page to see all interactive elements.

Specifications

EPA (ft²@45°):	0.9 ft² (0.08 m²)
Length:	28.3" (71.9 cm)
Width:	13.4" (34.0 cm)
Height:	3.0" (7.6 cm) Main Body 7.6" (19.3 cm) Arm
Weight (max):	39 lbs (17.7 kg)

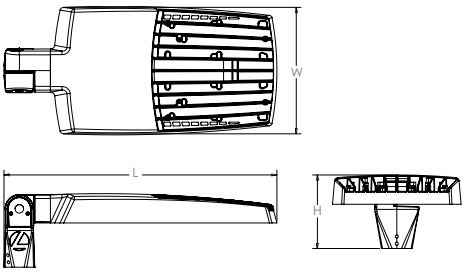

Introduction

The new RSXF LED Flood family delivers maximum value by providing significant energy savings, long life and outstanding photometric performance at an affordable price. The RSXF2 delivers 11,000 to 31,000 lumens allowing it to replace 250W to 1000W HID floodlights.

The RSXF features an adjustable integral slipfitter that allows the luminaire to be mounted on a 2-3/8" OD tenon. Integral cover/wire box serves as an approved splice compartment allowing for fast, easy mounting and wiring without opening the electrical compartment. A yoke and other mounting configurations are available.

Ordering Information

EXAMPLE: RSXF2 LED P4 40K WFL MVOLT IS DDBXD

RSXF2 LED

Series	Performance Package	Color Temperature	Distribution	Voltage	Mounting
RSXF2 LED	P1	30K 3000K	AWFD Area Wide Forward	MVOLT (120V-277V) [1]	IS Adjustable slipfitter (fits 2-3/8" OD tenon) [4]
	P2	40K 4000K	WFL Wide Flood	HVOLT (347V-480V) [2]	YKC63 Yoke with 16-3 SO cord, 3ft [4]
	P3	50K 5000K	MFL Medium Flood	**(use specific voltage for options as noted)**	AASP Adjustable tilt arm square pole mounting [4]
	P4		NFL Narrow Flood	120 [3] 277 [3]	AARP Adjustable tilt arm round pole mounting [4]
	P5		SP Spot	208 [3] 347 [3]	AAWB Adjustable tilt arm with wall bracket [4]
	P6		NSP Narrow Spot	240 [3] 480 [3]	AAWSC Adjustable tilt arm wall bracket and surface conduit box [4]

Options

Shipped Installed

PE	Photocontrol, button style [5,6]
PEX	Photocontrol external threaded, adjustable [6,7]
PER7	Seven-wire twist-lock receptacle only (no controls) [8,9,10]
CE34	Conduit entry 3/4" NPT (Qty 2)
SF	Single fuse (120, 277, 347) [3]
DF	Double fuse (208, 240, 480) [3]
SPD20KV	20KV Surge pack (10KV standard)
FAO	Field adjustable output [6,10]
DMG	0-10V dimming extend out back of housing for external control (control ordered separate) [6,10]
DS	Dual Switching [6,10,11]

Shipped Installed

***Standalone and Networked Sensors/Controls (factory default settings, see table page 9)**

NLTAIR2	nLight AIR generation 2 [10,12,13]
PIRHN	Networked, Bi-Level motion/ambient sensor (for use with NLTAIR2) [10,13,14]

Shipped Separately (requires some field assembly)

FV	Full Visor (360° around light aperture) [15]
UBV	Upper/bottom visor [15]
BS	Bird Spikes [16]

*Note: PIRHN with nLight Air can be used as a standalone or networked solution. Sensor coverage pattern is affected when luminaire is tilted.

Finish

DDBXD	Dark Bronze
DBLXD	Black
DNAXD	Natural Aluminum
DWHXD	White
DDBTXD	Textured Dark Bronze
DBLBXD	Textured Black
DNATXD	Textured Natural Aluminum
DWHGXD	Textured White

© 2011-2020 Acuity Brands Lighting, Inc. All rights reserved.

Ordering Information

Accessories

Ordered and shipped separately.

RSXF2FV (FINISH) U	Full visor (specify finish)
RSXF2UBV (FINISH) U	Upper/bottom visor (specify finish)
DLL127F 1.5 JU	Photocell - SSL twist-lock (120-277V) [17]
DLL347F 1.5 CUL JU	Photocell - SSL twist-lock (347V) [17]
DLL480F 1.5 CUL JU	Photocell -SSL twist-lock (480V) [17]
DSHORT SBK U	Shorting cap [17]

NOTES

1 MVOLT driver operates on any line voltage from 120-277V (50/60 Hz).
2 HVOLT driver operates on any line voltage from 347-480V (50/60 Hz).
3 Single fuse (SF) requires 120V, 277V or 347V. Double fuse (DF) requires 208V, 240V or 480V.
4 Maximum tilt is 90° above horizontal.
5 Requires MVOLT or 347V.
6 Not available in combination with other light sensing control options (following options cannot be combined: PE, PEX, PER7, FAO, DMG, PIRHN).
7 Requires 120V, 208V, 240V, 277V or 347V.
8 Twistlock photocell ordered and shipped as a separate line item from Acuity Brands Controls. See accessories. Shorting Cap included. Dimming leads capped for future use.
9 For units with option PER7, the mounting must be restricted to +/- 45° from horizontal aim per ANSI C136.10-2010.
10 Two or more of the following options cannot be combined including DMG, DS, PER7, FAO and PIRHN.
11 DS only available on performance package P4, P5 and P6.
12 Must be ordered with PIRHN.
13 Requires MVOLT or HVOLT.
14 Must be ordered with NLTAIR2. For additional information on PIRHN visit here.
15 It may be ordered as an accessory.
16 Must be ordered with fixture for factory pre-drilling.
17 Requires luminaire to be specified with PER7 option. Ordered and shipped as a separate line item from Acuity Brands Controls.

External Shields

UBV Visor - Top Mounted

UBV Visor - Bottom Mounted

Full Visor - 360°

Pole/Mounting Informatiion

Accessories including bullhorns, cross arms and other adpaters are available under the accessories tab at Lithonia's Outdoor Poles and Arms product page. Click here to visit Accessories.

HANDHOLE ORIENTATION

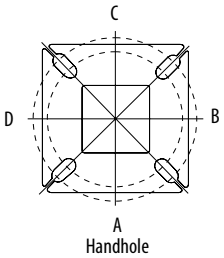

RSX POLE DRILLING

Template #8

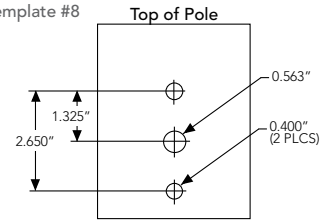

RSXF ADJUSTABLE ARM

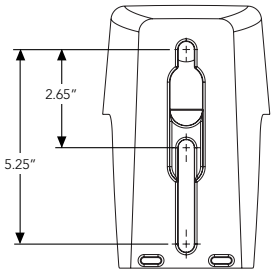

Round Tenon Mount - Pole Top Slipfitters

Tenon O.D.	RSX Mounting	Single	2 @ 180	2 @ 90	3 @ 120	3 @ 90	4 @ 90
2 - 3/8"	AARP	AS3-5 190	AS3-5 280	AS3-5 290	AS3-5 320	AS3-5 390	AS3-5 490
2 - 7/8"	AARP	AST25-190	AST25-280	AST25-290	AST25-320	AST25-390	AST25-490
4"	AARP	AST35-190	AST35-280	AST35-290	AST35-320	AST35-390	AST35-490

Drill Side Location by Configuration Type

Drilling Template	Mounting Option	Single	2 @ 180	2 @ 90	3 @ 120	3 @ 90	4 @ 90
	Head Location	Side B	Side B & D	Side B & C	Round Pole Only	Side B, C & D	Side A, B, C & D
#8	Drill Nomenclature	DM19AS	DM28AS	DM29AS	DM32AS	DM39AS	DM49AS

RSXF2 - Luminaire EPA

*Includes luminaire and integral mounting arm. Other tenons, arms, brackets or other accessories are not included in this EPA data.

Fixture Quantity & Mounting Configuration		EPA (ft²)								
		Single	2 @ 90	2 @ 180	3 @ 90	3 @ 120	4 @ 90	2 Side by Side	3 Side by Side	4 Side by Side
Mounting Type	**Tilt**									
IS - Integral Slipfitter **YK - Yoke** **AASP/AARP - Adjustable Arm Square/Round Pole**	0°	0.69	1.22	1.27	1.8	1.61	2.39	1.37	2.06	2.74
	10°	0.53	1.06	1.05	1.58	1.37	2.08	1.06	1.59	2.12
	20°	0.52	1.02	1.03	1.52	1.33	2.02	1.03	1.55	2.07
	30°	0.64	1.11	1.18	1.63	1.45	2.21	1.27	1.91	2.54
	40°	0.81	1.21	1.35	1.74	1.65	2.39	1.62	2.43	3.23
	45°	0.91	1.25	1.5	1.81	1.75	2.48	1.82	2.73	3.64
	50°	1.34	1.83	2.17	2.61	2.56	3.62	2.68	4.02	5.36
	60°	2.2	2.97	3.57	4.24	4.17	5.89	4.41	6.61	8.82
	70°	2.86	4.13	4.7	5.89	5.71	8.21	5.71	8.57	11.42
	80°	3.4	5.13	5.67	7.34	7.09	10.21	6.79	10.19	13.59
	90°	3.85	5.96	6.55	8.58	8.31	11.88	7.7	11.56	15.41

© 2011-2020 Acuity Brands Lighting, Inc. All rights reserved.

Photometric Diagrams

To see complete photometric reports or download .ies files for this product, visit Lithonia Lighting's RSX Area homepage.

Isofootcandle plots for the RSXF2 LED P6 40K. Distances are in units of mounting height (30').

LEGEND

- 0.1 fc
- 0.5 fc
- 1.0 fc

Luminaires tilted at 45°

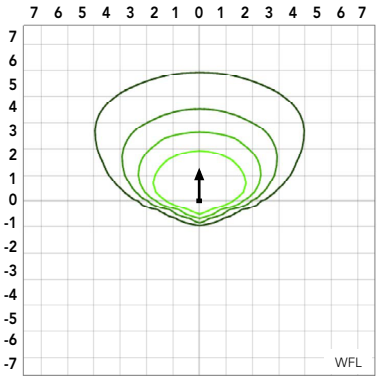

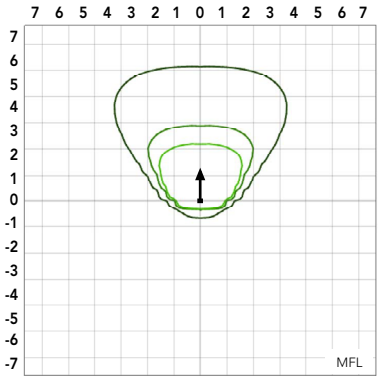

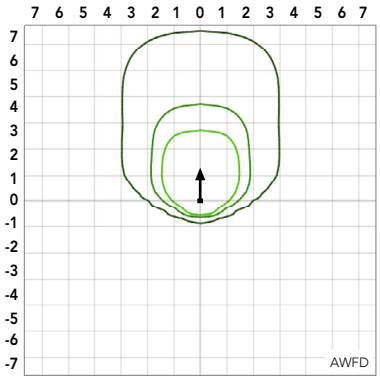

Luminaires tilted at 0°

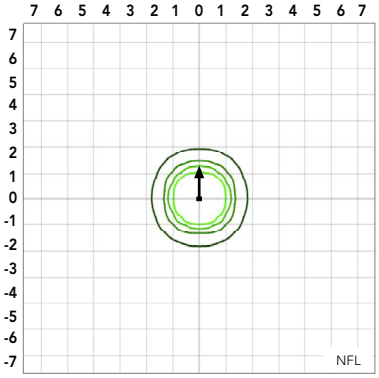

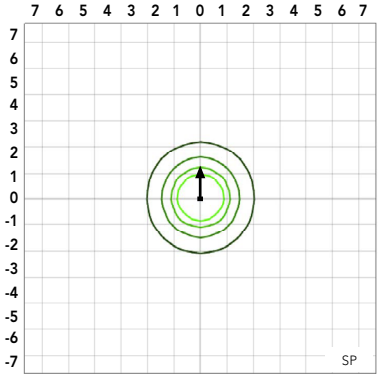

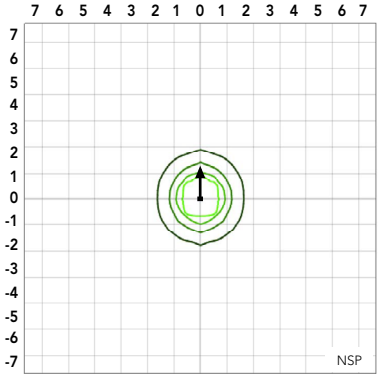

© 2011-2020 Acuity Brands Lighting, Inc. All rights reserved.

Performance Data

Lumen Ambient Temperature (LAT) Multipliers

Use these factors to determine relative lumen output for average ambient temperatures from 0-50°C (32-122°F).

Ambient	Ambient	Lumen Multiplier
0°C	32°F	1.05
5°C	41°F	1.04
10°C	50°F	1.03
15°C	59°F	1.02
20°C	68°F	1.01
25°C	77°F	1.00
30°C	86°F	0.99
35°C	95°F	0.98
40°C	104°F	0.97
45°C	113°F	0.96
50°C	122°F	0.95

Electrical Load

		Current (A)					
Performance Package	System Watts (W)	120V	208V	240V	277V	347V	480V
P1	71W	0.59	0.34	0.30	0.26	0.20	0.15
P2	111W	0.93	0.53	0.46	0.40	0.32	0.23
P3	147W	1.23	0.70	0.61	0.53	0.42	0.31
P4	187W	1.55	0.90	0.78	0.68	0.53	0.38
P5	210W	1.75	1.01	0.87	0.76	0.60	0.44
P6	244W	2.03	1.17	1.01	0.88	0.70	0.51

Projected LED Lumen Maintenance

Operating Hours	50,000	75,000	100,000
Lumen Maintenance Factor	>0.97	>0.95	>0.92

Values calculated according to IESNA TM-21-11 methodology and valid up to 40°C.

Lumen Output

Lumen values are from photometric tests performed in accordance with IESNA LM-79-08. Data is considered to be representative of the configurations shown, within the tolerances allowed by Lighting Facts. Contact factory for performance data on any configurations not shown here.

Performance Package	System Watts	Distribution. Type	Field Angle		Beam Angle		30K (3000K, 70 CRI)			40K (4000K, 70 CRI)			50K (5000K, 70 CRI)		
			°H	°V	°H	°V	Lumens	LPW	Max CD	Lumens	LPW	Max CD	Lumens	LPW	Max CD
P1	71W	AWFD	119	120	69	41	9,663	136	7,915	10,616	150	8,696	10,616	150	8,696
		WFL	133	129	116	80	9,467	133	4,031	10,401	146	4,428	10,401	146	4,428
		MFL	105	110	91	96	9,873	139	4,482	10,847	153	4,924	10,847	153	4,924
		NFL	78	79	44	45	9,529	134	14,090	10,469	147	15,480	10,469	147	15,480
		SP	48	48	27	27	9,223	130	29,378	10,133	143	32,277	10,133	143	32,277
		NSP	42	44	19	21	9,385	132	49,553	10,311	145	54,443	10,311	145	54,443
P2	111W	AWFD	119	120	69	41	15,094	136	12,364	16,584	149	13,584	16,584	149	13,584
		WFL	133	129	116	80	14,788	133	6,296	16,248	146	6,918	16,248	146	6,918
		MFL	105	110	91	96	15,422	139	7,001	16,944	153	7,692	16,944	153	7,692
		NFL	78	79	44	45	14,885	134	22,010	16,354	147	24,182	16,354	147	24,182
		SP	48	48	27	27	14,407	130	45,891	15,828	143	50,418	15,828	143	50,418
		NSP	42	44	19	21	14,660	132	77,406	16,107	145	85,046	16,107	145	85,046
P3	147W	AWFD	119	120	69	41	19,007	129	15,569	20,883	142	17,106	20,883	142	17,106
		WFL	133	129	116	80	18,622	127	7,928	20,460	139	8,711	20,460	139	8,711
		MFL	105	110	91	96	19,420	132	8,816	21,337	145	9,687	21,337	145	9,687
		NFL	78	79	44	45	18,744	128	27,716	20,594	140	30,451	20,594	140	30,451
		SP	48	48	27	27	18,142	123	57,788	19,932	136	63,490	19,932	136	63,490
		NSP	42	44	19	21	18,461	126	97,475	20,282	138	107,090	20,282	138	107,090
P4	187W	AWFD	119	120	69	41	22,974	123	18,819	25,241	135	20,676	25,241	135	20,676
		WFL	133	129	116	80	22,509	120	9,583	24,730	132	10,529	24,730	132	10,529
		MFL	105	110	91	96	23,474	126	10,657	25,790	138	11,708	25,790	138	11,708
		NFL	78	79	44	45	22,656	121	33,500	24,892	133	36,807	24,892	133	36,807
		SP	48	48	27	27	21,928	117	69,848	24,092	129	76,741	24,092	129	76,741
		NSP	42	44	19	21	22,314	119	117,820	24,516	131	129,446	24,516	131	129,446
P5	210W	AWFD	119	120	69	41	24,722	118	20,251	26,786	128	21,941	26,786	128	21,941
		WFL	133	129	116	80	24,222	115	10,312	26,612	127	11,330	26,612	127	11,330
		MFL	105	110	91	96	25,260	120	11,468	27,752	132	12,599	27,752	132	12,599
		NFL	78	79	44	45	24,380	116	36,050	26,786	128	39,607	26,786	128	39,607
		SP	48	48	27	27	23,597	112	75,164	25,925	123	82,580	25,925	123	82,580
		NSP	42	44	19	21	24,012	114	126,785	26,381	126	139,294	26,381	126	139,294
P6	244W	AWFD	119	120	69	41	27,637	113	22,638	30,364	124	24,872	30,364	124	24,872
		WFL	133	129	116	80	27,077	111	11,528	29,749	122	12,666	29,749	122	12,666
		MFL	105	110	91	96	28,237	116	12,819	31,024	127	14,085	31,024	127	14,085
		NFL	78	79	44	45	27,254	112	40,299	29,944	123	44,277	29,944	123	44,277
		SP	48	48	27	27	26,378	108	84,023	28,981	119	92,314	28,981	119	92,314
		NSP	42	44	19	21	26,842	110	141,728	29,491	121	155,715	29,491	121	155,715

© 2011-2020 Acuity Brands Lighting, Inc. All rights reserved.

Dimensions

RSXF2 with Adjustable Slipfitter (IS)

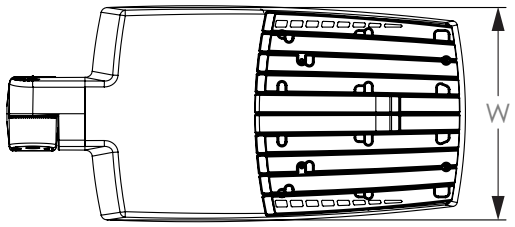

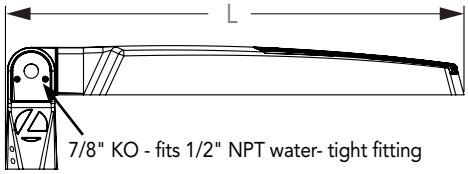

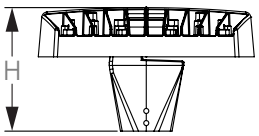

Length: 28.3" (71.9 cm)
Width: 13.4" (34.0 cm)
Height: 3.0" (7.6 cm) Main Body
7.6" (19.3 cm) Arm

RSXF2 with Yoke (YKC63)

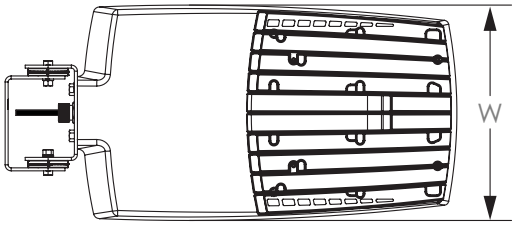

Length: 28.3" (71.9 cm)
Width: 13.4" (34.0 cm)
Height: 3.0" (7.6 cm) Main Body

Yoke (YK) Mounting Detail

Note: Mounting hole pattern is in-line with center of luminaire

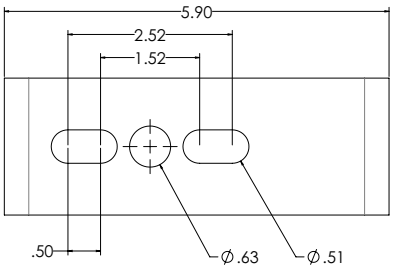

© 2011-2020 Acuity Brands Lighting, Inc. All rights reserved.

Dimensions

RSXF2 with Adjustable Tilt Arm - Square or Round Pole (AASP or AARP)

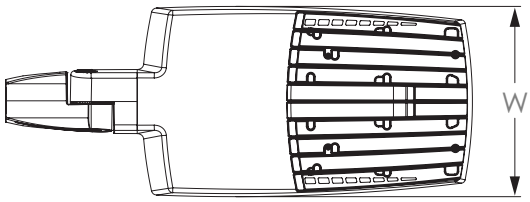

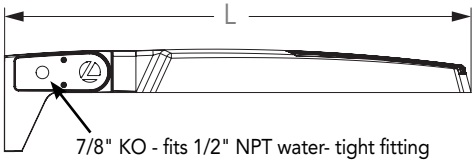

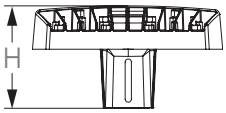

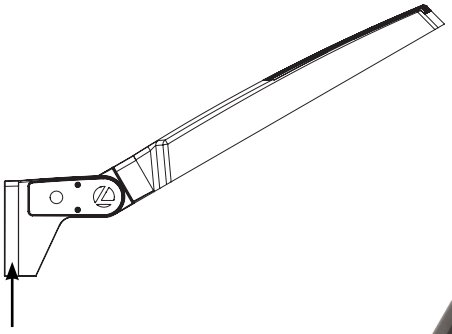

Length: 32.8" (83.3 cm) **AASP**
33.8" (85.9 cm) **AARP**
Width: 13.4" (34.0 cm)
Height: 3.0" (7.6 cm) Main Body
7.2" (18.2 cm) Arm

NOTE:
RPA - Round Pole mount can also be used to mount on square poles by omitting the round pole adapter plate shown here.

Notes

AASP: Requires 3.0" min. square pole for 1 at 90°. Requires 3.5" min. square pole for mounting 2, 3, 4 at 90°.

AARP: Requires 3.2" min. dia. round pole for 2, 3, 4 at 90°. Requires 3.0" min. dia. round pole for mounting 1 at 90°, 2 at 180°, 3 at 120°.

RSXF2 with Adjustable Tilt Arm with Wall Bracket (AAWB)

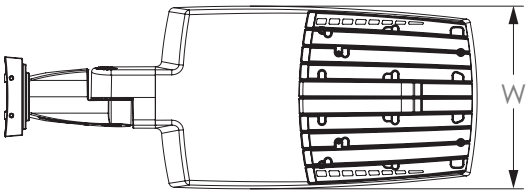

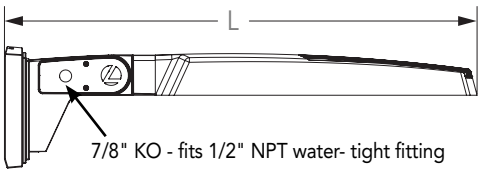

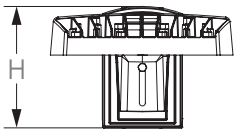

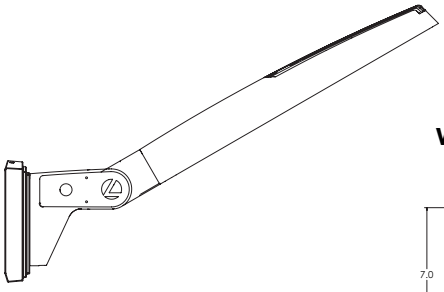

Wall Bracket (WBA) Mounting Detail

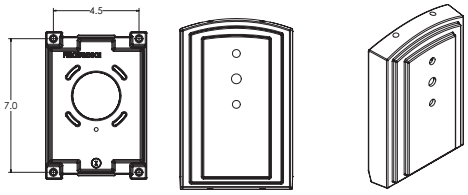

Length: 34.7" (88.1 cm)
Width: 13.4" (34.0 cm)
Height: 3.0" (7.6 cm) Main Body
8.9" (22.6 cm) Arm

© 2011-2020 Acuity Brands Lighting, Inc. All rights reserved.

Dimensions

RSXF2 with Adjustable Tilt Arm with Wall Bracket and Surface Conduit Box (AAWSC)

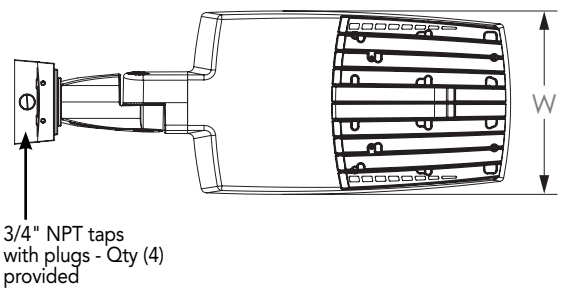

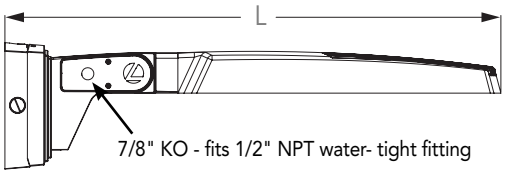

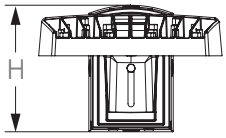

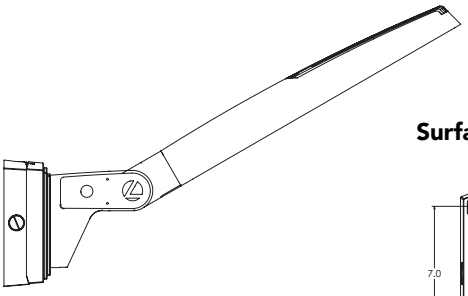

Length: 36.2" (91.9 cm)
Width: 13.4" (4.0 cm)
Height: 3.0" (7.6 cm) Main Body
9.2" (23.4 cm) Arm

Surface Conduit Box (SCB) Mounting Detail

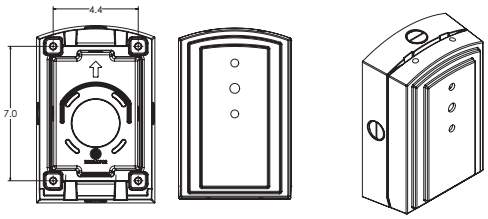

Additional Reference Drawings

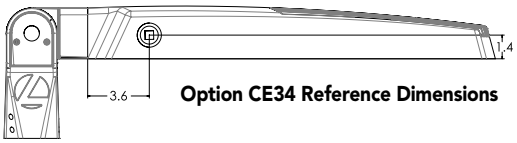

Option CE34 Reference Dimensions

© 2011-2020 Acuity Brands Lighting, Inc. All rights reserved.

PIRHN nLight Sensor Coverage Pattern

nLight PIRHN

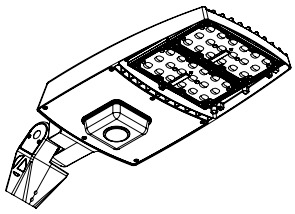

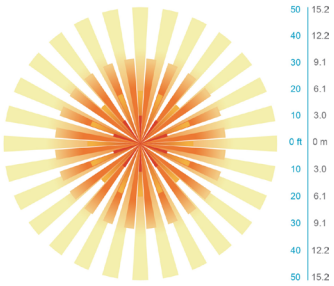

Top

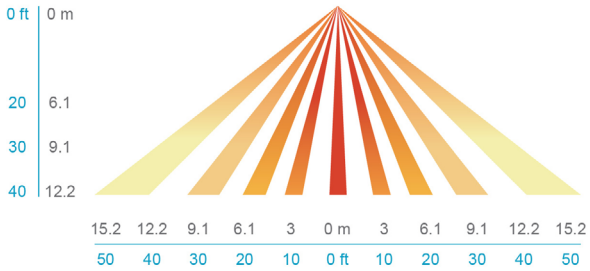

Side

Motion Sensor Default Settings - Option PIRHN						
Option	Dimmed State (unoccupied)	High Level (when occupied)	Photocell Operation	Dwell Time (occupancy time delay)	Ramp-up Time (from unoccupied to occupied)	Ramp-down Time (from occupied to unoccupied)
PIRHN	Approx. 30% Output	100% Output	Enabled @ 1.5FC	7.5 minutes	3 seconds	5 minutes

*Note: PIRHN default settings including photocell set-point, high/low dim rates, and occupancy sensor time delay are all configurable using the Clairity Pro App.

FEATURES & SPECIFICATIONS

INTENDED USE
The RSX LED flood family is designed to provide a long-lasting, energy-efficient solution for the one-for-one replacement of existing metal halide or high pressure sodium lighting. The RSXF1 delivers 11,000 to 31,000 lumens and is ideal for replacing 250W to 1000W HID floodlights in parking lots and other area lighting applications.

CONSTRUCTION
The RSX LED flood luminaire features a rugged die-cast aluminum main body that uses heat-dissipating fins and flow-through venting to provide optimal thermal management that both enhances LED performance and extends component life. Integral adjustable slipfitter mounts on a 2 3/8" OD tenon. The adjustable slipfitter has an integral junction box for easy installation. The light engines and housing are sealed against moisture and environmental contaminants to IP66. The low-profile design results in a low EPA, allowing pole optimization. Vibration rated per ANSI 136.31: RSXF and mountings rated for 3G vibration include IS, YK, AASP and AARP. RSXF and mountings rated for 1.5G vibration include AAWB and AAWSC.

FINISH
Exterior parts are protected by a zinc-infused Super Durable TGIC thermoset powder coat finish that provides superior resistance to corrosion and weathering. A tightly controlled multi-stage process ensures superior adhesion as well as a minimum finish thickness of 3 mils. The result is a high-quality finish that is warrantied not to crack or peel.

OPTICS
Precision acrylic refractive lenses are engineered for superior application efficiency, distributing the light to where it is needed most. Available in short and wide pattern distributions including Wide Flood, Medium Flood, Narrow Flood, Spot, Narrow Spot and an Area Wide/Forward distribution pattern featuring a strong forward throw reach that is ideal for lighting large areas from the perimeter..

ELECTRICAL
Light engine(s) configurations consist of high-efficacy LEDs mounted on metal-core circuit boards and aluminum heat sinks to maximize heat dissipation. Light engines are IP66 rated. LED lumen maintenance is >L92/100,000 hours. CCT's of 3000K, 4000K and 5000K (minimum 70 CRI) are available. Class 1 electronic drivers ensure system power factor >90% and THD <20%. Easily serviceable 10kV surge protection device meets a minimum Category C Low operation (per ANSI/IEEE C62.41.2).

STANDARD CONTROLS
The RSX LED flood luminaire has a wide assortment of control options. Dusk to dawn controls include MVOLT and 347V button-type photocells and NEMA twist-lock photocell receptacles.

nLIGHT AIR CONTROLS
The RSXF LED flood luminaire is also available with nLight® AIR which can be used for simple motion occupancy dimming or for the ultimate in wireless control. This powerful controls platform provides out-of-the-box basic motion sensing with photocontrol functionality and is suitable for mounting heights up to 40 feet. No commissioning is required when using factory default settings that provide basic stand-alone motion occupancy dimming that is switched on and off with a built-in photocell. See chart above for motion sensor default out-of-box settings. For more advanced wireless functionality, such as group dimming, nLight AIR can be commissioned using a smartphone and the easy-to-use CLAIRITY app. nLight AIR equipped luminaries can be grouped, resulting in motion sensor and photocell group response without the need for additional equipment. Scheduled dimming with motion sensor over-ride can be achieved when used with the nLight Eclypse. Additional information about nLight Air can be found here.

INSTALLATION
The integral "IS" mount offers an adjustable slipfitter that mounts on a 2 3/8" OD tenon. The adjustable slipfitter has an integral junction box and offers easy installation, wiring and precision distribution pattern aiming. A steel yoke mount is also available and includes a water-tight cord grip and cord. Additional mountings are available including an adjustable tilt arm for direct-to-pole and wall and a surface conduit box for wall mount applications. All mountings are adjustable in 5° increments. RSXF is not rated for tilting above 90° or mounting within 4 feet of ground. Can be tilted up to 90° above horizontal.

LISTINGS
CSA Certified to meet U.S. and Canadian standards. Suitable for wet locations. DesignLights Consortium® (DLC) Premium qualified product and DLC qualified product. Not all versions of this product may be DLC Premium qualified or DLC qualified. Please check the DLC Qualified Products List at www.designlights.org/QPL to confirm which versions are qualified.

WARRANTY
5-year limited warranty. Complete warranty terms located at:
www.acuitybrands.com/support/customer-support/terms-and-conditions

Note: Actual performance may differ as a result of end-user environment and application. All values are design or typical values, measured under laboratory conditions at 25 °C. Specifications subject to change without notice.

© 2011-2020 Acuity Brands Lighting, Inc. All rights reserved.

SP-19. CSX RAILROAD REQUIREMENTS

SPECIAL NOTE

RAILROAD AGREEMENT

D900056 **PIN 3501.60**

This project requires an agreement between the State of New York and **CSX TRANSPORTATION, INC. (CSXT)**. This agreement may not yet be approved by the Office of the State Comptroller. NYSDOT works directly with the Railroad to obtain an approved agreement and anticipates having the agreement approved by the time of contract award. The agreement will provide reimbursement to the Railroad for its services provided in support of the project, as deemed necessary by the State, including:

ENGINEERING, PERMITTING, PROTECTIVE SERVICES, and INSPECTION

The Contractor is advised that until the State's agreement with the Railroad has been approved by the Office of the State Comptroller, the Contractor may not be allowed to coordinate with the Railroad or secure the necessary Railroad permits, approvals and/or services to allow for the performance of contract work above, below or within fifty (50) feet of a Railroad or Railroad property.

To avoid any delays resulting from the State's Railroad agreement not being approved by the time the Contractor is ready to begin working, the Contractor should coordinate with NYSDOT when scheduling any work activities requiring coordination with the Railroad or permits, approvals, and/or services from the Railroad. Further information regarding delay provisions can be found in DB 108-04 of the Standard Specifications.

Additionally, the Contractor's attention is directed to DB 105-09, WORK AFFECTING RAILROADS, in the Standard Specifications.

SPECIAL NOTE

COORDINATION WITH RAILROADS

D900056 **PIN 3501.60**

This project requires Coordination with **CSX TRANSPORTATION, INC.**

The Contractor shall coordinate with the Railroad named above to acquire permits, plan reviews, approvals, authorizations, and/or protective services, necessitated by the Railroad to allow for contract work to occur above, below or within fifty (50) feet of the Railroad or Railroad property. It is anticipated that the Railroad will require its personnel to perform protective services for the Contractor while construction operations on the project take place above, below or within fifty (50) feet of the Railroad or Railroad property. The Railroad may require these protective services to ensure the safe operation of trains, prevent the delay of trains, or in the interest of the safety of all property and personnel on the project. The Railroad may not be able to fulfill all Contractor request(s) for Railroad protective services due to the Railroad's own operational needs. Therefore, flexibility in the Contractor's schedule and means and methods is recommended.

In consultation with the State's Engineer-in-Charge, the Contractor shall initiate coordination with the Railroad's point of contact listed below as early as possible in the project. The acquisition of any necessary permits, plan reviews, approvals, authorizations and/or protective services from the Railroad must occur before the Contractor is authorized to perform any work above, below or within fifty (50) feet of the Railroad or Railroad property. It is recommended that the Contractor coordinate with the State's Engineer-In-Charge and the Railroad when assembling its project schedule so appropriate durations and sequencing of activities requiring Railroad coordination and services can be appropriately captured.

Costs incurred by the Railroad for these coordination activities and services provided to the Contractor, as deemed necessary by the State, are reimbursable by the State through an agreement with the Railroad. The **RAILROAD AGREEMENT SPECIAL NOTE** contains additional information regarding the status of the State's agreement with the Railroad named above.

CSX TRANSPORTATION INC. POINT OF CONTACT:

NAME: Wendy Berrill
TITLE: Project Manager – Rail/Transit
ADDRESS 1: Michael Baker International (Representing CSX)
ADDRESS 2: 100 Airside Drive, Airside Business Park
CITY, STATE, ZIP: Moon Township, PA 15108
PHONE: 412-375-3197
EMAIL: wberrill@mbakerintl.com

Additionally, the Contractor's attention is directed to DB 105-09, WORK AFFECTING RAILROADS, in the Standard Specifications.

SPECIAL NOTE

RAILROAD DATA

Railroad operations information is available from the Federal Railroad Administration (FRA) website:

https://safetydata.fra.dot.gov/OfficeofSafety/PublicSite/Crossing/Xingqryloc.aspx

For locations where there are tracks present, if the FRA database lists zero (0) trains per day, a minimum of one (1) train per day should be assumed.

For additional requirements related to railroads, refer to the Standard Specifications DB 105-09 – *Work Affecting Railroads*.

Exhibit – 1CSX

CSX Special Provisions

CSXT SPECIAL PROVISIONS

I. AUTHORITY OF CSXT ENGINEER

The CSXT Representative shall have final authority in all matters affecting the safe maintenance of CSXT operations and CSXT property, and his or her approval shall be obtained by the Agency or its Contractor for methods of construction to avoid interference with CSXT operations and CSXT property and all other matters contemplated by the Agreement and these Special Provisions.

II. INTERFERENCE WITH CSXT OPERATIONS

A. Agency or its Contractor shall arrange and conduct its work so that there will be no interference with CSXT operations, including train, signal, telephone and telegraphic services, or damage to CSXT's property, or to poles, wires, and other facilities of tenants on CSXT's Property or right-of-way. Agency or its Contractor shall store materials so as to prevent trespassers from causing damage to trains, or CSXT Property. Whenever Work is likely to affect the operations or safety of trains, the method of doing such Work shall first be submitted to the CSXT Representative for approval, but such approval shall not relieve Agency or its Contractor from liability in connection with such Work.

B. If conditions arising from or in connection with the Project require that immediate and unusual provisions be made to protect train operation or CSXT's property, Agency or its Contractor shall make such provision. If the CSXT Representative determines that such provision is insufficient, CSXT may, at the expense of Agency or its Contractor, require or provide such provision as may be deemed necessary, or cause the Work to cease immediately.

III. NOTICE OF STARTING WORK

Agency or its Contractor shall not commence any work on CSXT Property or rights-of-way until it has complied with the following conditions:

A. Notify CSXT in writing of the date that it intends to commence Work on the Project. Such notice must be received by CSXT at least ten (10) business days in advance of the date Agency or its Contractor proposes to begin Work on CSXT property. The notice must refer to this Agreement by date. If flagging service is required, such notice shall be submitted at least thirty (30) business days in advance of the date scheduled to commence the Work.

B. Obtain authorization from the CSXT Representative to begin Work on CSXT property, such authorization to include an outline of specific conditions with which it must comply.

C. Obtain from CSXT the names, addresses and telephone numbers of CSXT's personnel who must receive notice under provisions in the Agreement. Where more than one individual is designated, the area of responsibility of each shall be specified.

IV. WORK FOR THE BENEFIT OF THE CONTRACTOR

A. No temporary or permanent changes to wire lines or other facilities (other than third party fiber optic cable transmission systems) on CSXT property that are considered necessary to the Work are anticipated or shown on the Plans. If any such changes are, or become, necessary in the opinion of CSXT or Agency, such changes will be covered by appropriate revisions to the Plans and by preparation of a force account estimate. Such force account estimate may be initiated by either CSXT or Agency, but must be approved by both CSXT and Agency. Agency or Contractor shall be responsible for arranging for the relocation of the third party fiber optic cable transmission systems, at no cost or expense to CSXT.

B. Should Agency or Contractor desire any changes in addition to the above, then it shall make separate arrangements with CSXT for such changes to be accomplished at the Agency or Contractor's expense.

V. HAUL ACROSS RAILROAD

A. If Agency or Contractor desires access across CSXT property or tracks at other than an existing and open public road crossing in or incident to construction of the Project, the Agency or Contractor must first obtain the permission of CSXT and shall execute a license agreement or right of entry satisfactory to CSXT, wherein Agency or Contractor agrees to bear all costs and liabilities related to such access.

B. Agency and Contractor shall not cross CSXT's property and tracks with vehicles or equipment of any kind or character, except at such crossing or crossings as may be permitted pursuant to this section.

VI. COOPERATION AND DELAYS

A. Agency or Contractor shall arrange a schedule with CSXT for accomplishing stage construction involving work by CSXT. In arranging its schedule, Agency or Contractor shall ascertain, from CSXT, the lead time required for assembling crews and materials and shall make due allowance therefore.

B. Agency or Contractor may not charge any costs or submit any claims against CSXT for hindrance or delay caused by railroad traffic; work done by CSXT or other delay incident to or necessary for safe maintenance of railroad traffic; or for any delays due to compliance with these Special Provisions.

C. Agency and Contractor shall cooperate with others participating in the construction of the Project to the end that all work may be carried on to the best advantage.

D. Agency and Contractor understand and agree that CSXT does not assume any responsibility for work performed by others in connection the Project. Agency and Contractor further understand and agree that they shall have no claim whatsoever against CSXT for any inconvenience, delay or additional cost incurred by Agency or Contractor on account of operations by others.

VII. STORAGE OF MATERIALS AND EQUIPMENT

Agency and Contractor shall not store their materials or equipment on CSXT's property or where they may potentially interfere with CSXT's operations, unless Agency or Contractor has received CSXT Representative's prior written permission. Agency and Contractor understand and agree that CSXT will not be liable for any damage to such materials and equipment from any cause and that CSXT may move, or require Agency or Contractor to move, such material and equipment at Agency's or Contractor's sole expense. To minimize the possibility of damage to the railroad tracks resulting from the unauthorized use of equipment, all grading or other construction equipment that is left parked near the tracks unattended by watchmen shall be immobilized to the extent feasible so that it cannot be moved by unauthorized persons.

VIII. CONSTRUCTION PROCEDURES

A. General

1. Construction work on CSXT property shall be subject to CSXT's inspection and approval.

2. Construction work on CSXT property shall be in accord with CSXT's written outline of specific conditions and with these Special Provisions.

3. Contractor shall observe the terms and rules of the CSXT Safe Way manual, which Agency and Contractor shall be required to obtain from CSXT, and in accord with any other instructions furnished by CSXT or CSXT's Representative.

B. Blasting

1. Agency or Contractor shall obtain CSXT Representative's and Agency Representative's prior written approval for use of explosives on or adjacent to CSXT property. If permission for use of explosives is granted, Agency or Contractor must comply with the following:

   a. Blasting shall be done with light charges under the direct supervision of a responsible officer or employee of Agency or Contractor.

   b. Electric detonating fuses shall not be used because of the possibility of premature explosions resulting from operation of two-way train radios.

   c. No blasting shall be done without the presence of an authorized representative of CSXT. At least thirty (30) days advance notice to CSXT Representative is required to arrange for the presence of an authorized CSXT representative and any flagging that CSXT may require.

   d. Agency or Contractor must have at the Project site adequate equipment, labor and materials, and allow sufficient time, to (i) clean up (at Agency's expense) debris resulting from the blasting without any delay to trains; and (ii) correct (at Agency's expense) any track misalignment or other damage to CSXT's property resulting from the blasting, as directed by CSXT Representative, without delay to trains. If Agency's or Contractor's actions result in delay of any trains, including Amtrak passenger trains, Agency shall bear the entire cost thereof.

   e. Agency and Contractor shall not store explosives on CSXT property.

2. CSXT Representative will:

   a. Determine the approximate location of trains and advise Agency or Contractor of the approximate amount of time available for the blasting operation and clean-up.

   b. Have the authority to order discontinuance of blasting if, in his or her opinion, blasting is too hazardous or is not in accord with these Special Provisions.

IX. MAINTENANCE OF DITCHES ADJACENT TO CSXT TRACKS

Agency or Contractor shall maintain all ditches and drainage structures free of silt or other obstructions that may result from their operations. Agency or Contractor shall provide erosion control measures during construction and use methods that accord with applicable state standard specifications for road and bridge construction, including either (1) silt fence; (2) hay or straw barrier; (3) berm or temporary ditches; (4) sediment basin; (5) aggregate checks; and (6) channel lining. All such maintenance and repair of damages due to Agency's or Contractor's operations shall be performed at Agency's expense.

X. FLAGGING / INSPECTION SERVICE

A. CSXT has sole authority to determine the need for flagging required to protect its operations and property. In general, flagging protection will be required whenever Agency or Contractor or their equipment are, or are likely to be, working within fifty (50) feet of live track or other track clearances specified by CSXT, or over tracks.

B. Agency shall reimburse CSXT directly for all costs of flagging that is required on account of construction within CSXT property shown in the Plans, or that is covered by an approved plan revision, supplemental agreement or change order.

C. Agency or Contractor shall give a minimum of thirty (30) days advance notice to CSXT Representative for anticipated need for flagging service. No work shall be undertaken until the flag person(s) is/are at the job site. If it is necessary for CSXT to advertise a flagging job for bid, it may take up to ninety (90) days to obtain this service, and CSXT shall not be liable for the cost of delays attributable to obtaining such service.

D. CSXT shall have the right to assign an individual to the site of the Project to perform inspection service whenever, in the opinion of CSXT Representative, such inspection may be necessary. Agency shall reimburse CSXT for the costs incurred by CSXT for such inspection service. Inspection service shall not relieve Agency or Contractor from liability for its Work.

E. CSXT shall render invoices for, and Agency shall pay for, the actual pay rate of the flagpersons and inspectors used, plus standard additives, whether that amount is above or below the rate provided in the Estimate. If the rate of pay that is to be used for inspector or flagging service is changed before the work is started or during the progress of the work, whether by law or agreement between CSXT and its employees, or if the tax rates on labor are changed, bills will be rendered by CSXT and paid by Agency using the new rates. Agency and Contractor shall perform their operations that require flagging protection or inspection service in such a manner and sequence that the cost of such will be as economical as possible.

XI. UTILITY FACILITIES ON CSXT PROPERTY

Agency shall arrange, upon approval from CSXT, to have any utility facilities on or over CSXT Property changed as may be necessary to provide clearances for the proposed trackage.

XII. CLEAN-UP

Agency or Contractor, upon completion of the Project, shall remove from CSXT's Property any temporary grade crossings, any temporary erosion control measures used to control drainage, all machinery, equipment, surplus materials, falsework, rubbish, or temporary buildings belonging to Agency or Contractor. Agency or Contractor, upon completion of the Project, shall leave CSXT Property in neat condition, satisfactory to CSXT Representative.

XIII. FAILURE TO COMPLY

If Agency or Contractor violate or fail to comply with any of the requirements of these Special Provisions, (a) CSXT may require Agency and/or Contractor to vacate CSXT Property; and (b) CSXT may withhold monies due Agency and/or Contractor; (c) CSXT may require Agency to withhold monies due Contractor; and (d) CSXT may cure such failure and the Agency shall reimburse CSXT for the cost of curing such failure.

Exhibit – 2CSX

CSX Insurance Provisions

ATTACHMENT "A"

INSURANCE REQUIREMENTS

I. Insurance Policies:

Agency and its Designee, if and to the extent that either is performing work on or about CSX's property, shall procure and maintain the following insurance policies:

1. Commercial General Liability coverage at their sole cost and expense with limits of not less than$5,000,000 in combined single limits for bodily injury and/or property damage per occurrence, and such policies shall name CSX as an additional named insured. The policy shall include endorsement ISO CG 24 17 evidencing that coverage is provided for work within 50 feet of a railroad. If such endorsement is not included, railroad protective liability insurance must be provided as described in item 4 below.

2. Statutory Worker's Compensation and Employers Liability Insurance with limits of not less than$1,000,000, which insurance must contain a waiver of subrogation against CSX and its affiliates (if permitted by state law).

3. Commercial automobile liability insurance with limits of not less than $1,000,000 combined single limit for bodily injury and/or property damage per occurrence, and such policies shall name CSX as an additional named insured. The policy shall include endorsement ISO CA 20 70 evidencing that coverage is provided for work within 50 feet of a railroad. If such endorsement is not included, railroad protective liability insurance must be provided as described in item 4 below.

4. Railroad protective liability insurance with limits of not less than $5,000,000 combined single limit for bodily injury and/or property damage per occurrence and an aggregate annual limit of $10,000,000, which insurance shall satisfy the following additional requirements:

a. The Railroad Protective Insurance Policy must be on the ISO/RIMA Form of Railroad Protective Insurance - Insurance Services Office (ISO) Form CG 00 35.

b. CSX Transportation must be the named insured on the Railroad Protective Insurance Policy.

c. Name and Address of Contractor and Agency must appear on the Declarations page.

d. Description of operations must appear on the Declarations page and must match the Project description.

e. Authorized endorsements must include the Pollution Exclusion Amendment - CG 28 31, unless using form CG 00 35 version 96 and later.

f. Authorized endorsements may include:

(i). Broad Form Nuclear Exclusion - IL 00 21
(ii) 30-day Advance Notice of Non-renewal or cancellation
(iii) Required State Cancellation Endorsement
(iv) Quick Reference or Index - CL/IL 240

g. Authorized endorsements may not include:
(i) A Pollution Exclusion Endorsement except CG 28 31
(ii) A Punitive or Exemplary Damages Exclusion
(iii) A “Common Policy Conditions” Endorsement
(iv) Any endorsement that is not named in Section 4 (e) or (f) above.
(v) Policies that contain any type of deductible

5. All insurance companies must be A. M. Best rated A- and Class VII or better.

6. The CSX OP number or CSX contract number, as applicable, must appear on each Declarations page and/or certificates of insurance.

7. Such additional or different insurance as CSX may require.

II. Additional Terms

1. Contractor must submit the complete Railroad Protective Liability policy, Certificates of Insurance and all notices and correspondence regarding the insurance policies in an electronic format to:

Insurance Department
CSX Transportation, Inc.
500 Water Street, C-907
Jacksonville, FL 32202

OR

insurancedocuments@csx.com

2. Neither Agency nor its Designee may begin work on or about CSX property until written approval of the required insurance has been received from CSX or CSX’s Insurance Compliance vendor, Ebix.

Exhibit – 3CSX

CSX Ballast Requirements

Diagram: Standard Clearance Matrix (2605)

2605

DIMENSIONS - NOTES:
ARE SHOWN IN FEET AND INCHES (F-I-IN).
ARE FOR TANGENT TRACK. SEE CSX 2604 FOR INCREASE DUE TO CURVATURE.
VERTICAL CLEARANCE IS MEASURED FROM TOP OF HIGH RAIL FOR THE ENTIRE FULL HORIZONTAL WIDTH DESCRIBED BELOW.
HORIZONTAL CLEARANCE IS MEASURED FROM CENTERLINE OF NEAREST TRACK.
APPLY TO ALL NEW CONSTRUCTION. RECONSTRUCTION AND ALTERATIONS
ALL COLUMNS ARE MINIMUM EXCEPT COLUMNS 22, 24, 27, AND 29 WHICH ARE MAXIMUM
CFH = CAR FLOOR HEIGHT.
REFERENCE CHAPTER 28 OF AREMA MANUAL FOR RAILWAY ENGINEERING FOR ENTIRE DETAILS OF STATE LEGAL CLEARANCES

	TRACK CENTERS									VERTICAL							HORIZONTAL						
	MAIN TRACKS	ANY TWO NON-MAIN TRACKS	ADJACENT NON-MAIN TRACK TO ANY MAIN TRACK	LADDER TRACK ADJACENT TO ANY PARALLEL TRACK	TWO ADJACENT PARALLEL LADDER TRACKS	LADDER TRACKS AND CABOOSE TRACKS	TEAM TRACKS IN PAIRS	UNLOADING TRACKS AT PLATFORMS	MAIN TRACK AND BULK LOADING OR UNLOADING TRACK	GENERAL (UNLESS PROVIDED FOR)	THRU BRIDGES	HIGHWAY BRIDGE (SPANNING TRACKS)	TUNNELS	BUILDING DOORS	IN BUILDINGS	GENERAL (UNLESS PROVIDED FOR)	THRU BRIDGES	HIGHWAY BRIDGE (SPANNING TRACKS)	TUNNELS	BUILDING DOORS	IN BUILDINGS
1	2	3	4	5	6	7	8	9	10	11	12	13	14	15	16	17	18	19	20	21
15-0	14-0	20-0	20-0	19-0	14-0	13-6	13-6	20-0	23-0	23-0	23-0	23-0	18-0	22-0	9-0	9-0	25-0	9-0	8-0	8-0

EXCEPTIONS:
COLUMN 6 SHALL BE 17-0 IN MASSACHUSETTS
COLUMN 7 AND 8 SHALL BE 14-0 IN MICHIGAN
COLUMN 14 SHALL BE 21-0 IN OHIO; 22-0 IN INDIANA, WEST VIRGINIA, & CANADA; 22-6 IN CONNECTICUT, MASSACHUSETTS, & MICHIGAN
COLUMN 15 SHALL BE 22-6 IN CONNECTICUT, MASSACHUSETTS, & MICHIGAN; 23-0 IN DELAWARE
COLUMN 16 SHALL BE 12-0 IN PENNSYLVANIA
COLUMN 20 SHALL BE 8-6 IN MASSACHUSETTS AND MICHIGAN
COLUMN 21 SHALL BE 8-6 IN MICHIGAN

HORIZONTAL

	PLATFORMS				SIGNALS									
	CENTERLINE OF TRACK GENERAL				HIGH	LOW BETWEEN TRACKS			SWITCH BOXES ETC.					
	PASSENGER		FREIGHT			HEIGHT	CLEARANCE	HEIGHT	CLEARANCE	POLES	ORE AND COAL DOCKS
	A	B	C	D							
	22	23	24	25	26	27	28	29	30	31	32
	0-8	5-1	CFH	8-0	8-6	3-0	6-0	0-4	3-0	12-0	8-0

EXCEPTIONS:
COLUMN 22 SHALL BE 0-4 IN ILLINOIS
COLUMN 23 SHALL BE 5-2 IN CONNECTICUT
COLUMN 25 SHALL BE 8-6 IN CONNECTICUT, MARYLAND, MICHIGAN, NEW YORK, & PENNSYLVANIA
COLUMN 26 SHALL BE 9-0 IN DELAWARE; 12-0 IN PENNSYLVANIA
COLUMN 27 SHALL BE 4-0 IN CANADA
COLUMN 29 SHALL BE 0-5 IN CANADA
COLUMN 30 SHALL BE 3-10 IN CANADA
COLUMN 32 SHALL BE 8-4 1/4 IN CANADA; 8-6 IN DC. & MARYLAND

CSX How tomorrow moves

STANDARD CLEARANCE MATRIX

APPROVED - DIRECTOR ENGINEERING STANDARDS

APPROVED CHIEF ENGNIEER - ENGINEERING SERVICES

PREPARED BY: C.S. MOALE

ISSUED: JULY 19, 1996
REVISED: NOVEMBER 12, 2014

2604

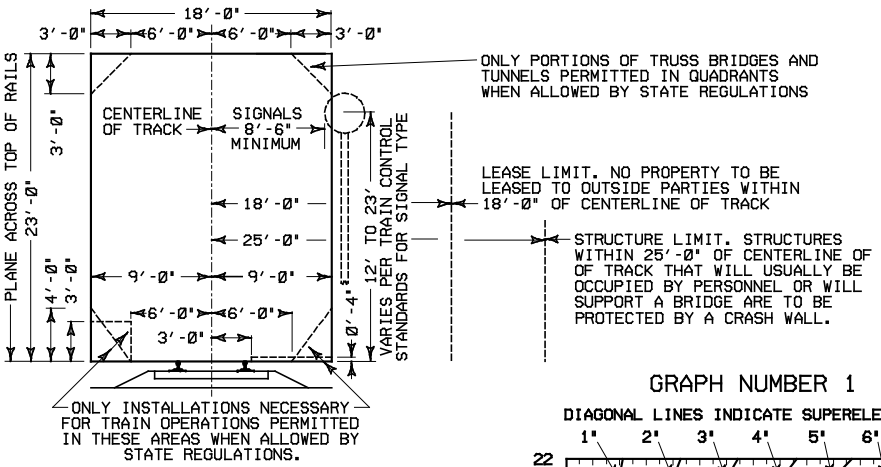

GENERAL

MAIN TRACKS, YARD TRACKS AND SIDINGS

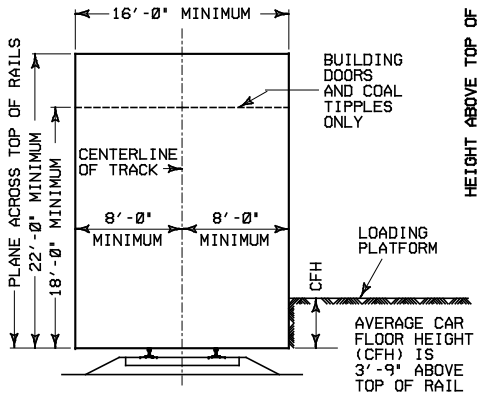

INDUSTRIAL SIDE TRACKS

GRAPH NUMBER 1

DIAGONAL LINES INDICATE SUPERELEVATION

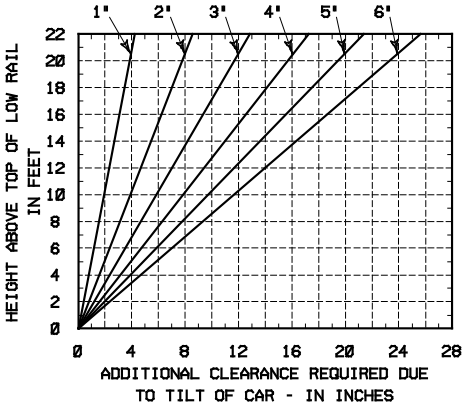

1. STANDARD CLEARANCES ARE TO BE USED FOR ALL NEW CONSTRUCTION WHERE THERE ARE NO LEGAL REQUIREMENTS THAT DICTATE GREATER CLEARANCES.

2. CLEARANCES FOR RECONSTRUCTION, REHABILITATION AND ALTERATION WORK ARE DEPENDENT ON EXISTING PHYSICAL CONDITIONS. WHERE POSSIBLE, THEY WILL BE IMPROVED TO COMPLY WITH THE STANDARD CLEARANCES.

3. STATE OR CANADIAN CLEARANCE LAWS MUST NOT BE VIOLATED. LEGAL REQUIRMENTS MAY BE MODIFIED ONLY BY THE GOVERNMENTAL BODY THAT ISSUED THEM.

4. STANDARD CLEARANCE MAY BE MODIFIED ONLY IF APPROVED BY THE CHIEF ENGINEER DESIGN, CONSTRUCTION, AND CAPACITY.

5. STANDARD CLEARANCE DIAGRAMS SHOWN ARE FOR TANGENT TRACK AND INCREASES MUST BE BE PROVIDED FOR THE EFFECTS OF CURVATURE AND SUPERELEVATION.

   A. ADDITIONAL CLEARANCE DUE TO CURVATURE:

      WHEN A FIXED OBSTRUCTION IS LOCATED ADJACENT TO A CURVED TRACK, THE HORIZONTAL CLEARANCE WILL BE INCREASED 1 1/2 INCHES PER DEGREE OF CURVATURE ON BOTH SIDES OF THE TRACK CENTERLINE PER TABLE 1. EXCEPTION: FLORIDA REQUIRES 2 INCHES PER DEGREE.

   B. ADDITIONAL CLEARANCE DUE TO SUPERELEVATION:

      WHEN A FIXED OBSTRUCTION IS LOCATED ADJACENT TO A SUPERELEVATED TRACK, THE HORIZONTAL CLEARANCE ON THE LOW RAIL SIDE OF THE TRACK WILL BE INCREASED TO ALLOW FOR TILT. THE MINIMUM INCREASE IS SHOWN ON GRAPH NO. 1.

   C. ADDITIONAL CLEARANCE DUE TO CURVATURE AND SUPERELEVATION:

      WHEN A FIXED OBSTRUCTION IS LOCATED ADJACENT TO A CURVED AND SUPERELEVATED TRACK, THE HORIZONTAL CLEARANCE INCREASE WILL BE THE SUM OF THE INCREASES OBTAINED USING 5.A AND 5.B ABOVE. EXCEPTION: CANADA REQUIRES A MINIMUM OF 2 INCHES PER DEGREE.

   D. ADDITIONAL CLEARANCE ON TANGENT TRACKS:

      WHEN A FIXED OBSTRUCTION IS ADJACENT TO TANGENT TRACK BUT THE TRACK IS CURVED WITHIN 80 FEET OF THE OBSTRUCTION, THE HORIZONTAL CLEARANCE WILL BE INCREASED AS FOLLOWS:

DISTANCE FROM OBSTRUCTION TO CURVED TRACK - FEET	INCREASED HORIZONTAL CLEARANCE
0 TO 20	100% OF PARAGRAPH 5.C
21 TO 40	75% OF PARAGRAPH 5.C
41 TO 60	50% OF PARAGRAPH 5.C
61 TO 80	25% OF PARAGRAPH 5.C

6. VERTICAL CLEARANCE ON SUPERELEVATED TRACK IS MEASURED FROM THE TOP OF THE HIGH RAIL.

CSX TRANSPORTATION

CLEARANCE DIAGRAMS

APPROVED – CHIEF ENGINEER
DESIGN, CONSTRUCTION, & CAPACITY

APPROVED – VICE PRESIDENT
ENGINEERING

PREPARED BY:
D.C. CLARK

ISSUED: JULY 19, 1996
REVISED: SEPTEMBER 5, 2006

TABLE NUMBER 1

ADDITIONAL CLEARANCE REQUIRED DUE TO CURVATURE - IN INCHES

DEGREE OF CURVE	1	2	3	4	5	6	7	8	9	10	11	12
ALL LOCATIONS EXCEPT FLORIDA	1 1/2	3	4 1/2	6	7 1/2	9	10 1/2	12	13 1/2	15	16 1/2	18
IN THE STATE OF FLORIDA	2	4	6	8	10	12	14	16	18	20	22	24

CSXT Ballast Requirements

1) SCOPE:

   a) These specifications cover the requirement for grading and other significant physical properties of mineral aggregates for prepared track ballast.

2) TYPES OF BALLAST:

   a) Ballast shall be quarried Granite or Trap Rock produced in a crushing-screening plant designed to satisfy the specifications listed below.

   b) The mineral aggregate shall be clean, hard, durable, free from any frozen lumps, deleterious matter and harmful adherent coatings. No materials subject to regulation as hazardous wastes as defined in the administrative code of the state where the material will be used shall be allowed.

3) TESTING:

   a) Determinations of deleterious substances resistance to abrasion and soundness shall be made at a testing laboratory approved by the Railroad.

   b) Visual inspections and gradation test shall be made at the place of production prior to shipment as often as considered necessary. (Minimum of 1 sample per 1000 tons of ballast produced but may be reduced if material consistently meets specification.) Gradation test results will be transmitted by e-mail to the CSX project representative. The reports shall be forwarded in a consolidated monthly summary of tests in an electronic format such as Excel. The supplier shall retain the details of gradation for a minimum of one year after the test is performed.

   c) CSX retains the right to conduct on-site inspection for compliance to this specification.

   d) Samples of the finished product for all tests shall be representative and of sufficient weight for testing.

4) GRADING REQUIREMENTS:

   a) All track ballast supplied for the project shall meet the requirements of AREMA Gradation 4A.

Size No. (See Note 1)	Nominal Size Square Opening	Percent Passing									
		3″	2½″	2″	1½″	1″	¾″	½″	d″	No.4	No. 8
24	2½″- ¾″	100	90-100		25-60		0-10	0-5	–	–	–
25	2½″ - d″	100	80-100	60-85	50-70	25-50	–	5-20	0-10	0-3	–
3	2″ - 1″	–	100	95-100	35-70	0-15	–	0-5	–	–	–
4A	2″ - ¾″	–	100	90-100	60-90	10-35	0-10	–	0-3	–	–
4	1½″ - ¾″	–	–	100	90-100	20-55	0-15	–	0-5	–	–
5	1″ - d″	–	–	–	100	90-100	40-75	15-35	0-15	0-5	–
57	1″ - No. 4	–	–	–	100	95-100	–	25-60	–	0-10	0-5

Note 1: Gradation Numbers 24, 25, 3, 4A and 4 are main line ballast materials. Gradation Numbers 5 and 57 are yard ballast materials.

Table 1 – AREMA Ballast Gradations

b) The grading of prepared track ballast and sub-ballast shall be determined by test with laboratory sieves having square openings and conforming to current ASTM Specifications, Designation E-11.

5) QUALITY REQUIREMENTS:

a) Deleterious substances shall not be present in prepared ballast in excess of the following amounts:

i) Material finer than No. 200 sieve (Track ballast only) = 1%

ii) Clay lumps and Soft or Friable pieces = 0.5%
(If clay lumps and soft or friable pieces exceeds 0.5%, the supplier must test and certify that clay lumps do not exceed 0.5% and soft or friable pieces do not exceed 2%. Action plan must be submitted to reduce this material.)

iii) The percentage of wear of prepared ballast tested in the Los Angeles Machine shall not be greater than 32%.

b) Granite ballast is considered the CSX Standard. Any deviation must be approved by the Vice President, Engineering.

c) The soundness of prepared ballast for use in regions where freezing temperatures are expected shall satisfy either of the following criteria:

i) In the sodium sulfate soundness test, the weighted average loss shall not be in excess of 7% after 5 cycles.

ii) In the magnesium sulfate soundness test, the weighted average loss shall not be in excess of 11% after 5 cycles.

6) METHODS OF TEST:

a) The supplier shall certify the ballast delivered to the Railroad is typical of that upon which specified tests have been made.

b) Samples shall be secured in accordance with the current ASTM methods of sampling. Designation D-75.

c) Sieve analysis shall be made in accordance with current ASTM method of test. Designation C-136.

d) Material finer than the No. 200 sieve shall be determined in accordance with the current ASTM of test. Designation C-117.

e) The percentage of clay lumps and soft particles shall be determined in accordance with the current ASTM method of test. Designation C-142.

f) The resistance to abrasion shall be determined in accordance with the current ASTM method of test. Designation C-131, or C-535, using the standard grading most nearly representative of the size of ballast specified.

g) Soundness test shall be made in accordance with the current ASTM method of test. Designation C-88.

h) The weight per cubic foot shall be determined in accordance with the current ASTM method of test designation C-29.

APPENDIX

CSX TRANSPORTATION

TEMPORARY RIGHT OF ENTRY AGREEMENT

Public Projects Group
Jacksonville, FL
Date Issued: April 2022

THIS AGREEMENT, made as of _____, 20___, by and between CSX TRANSPORTATION, INC., a Virginia corporation, whose mailing address is 500 Water Street, Jacksonville, Florida 32202, hereinafter called "CSX," and (**********), whose mailing address is (**********), (**********), hereinafter called "Licensee," WITNESSETH:

WHEREAS, Licensee has submitted a written application to CSX requesting permission to enter CSX's property located within the (*****) Division, (*****) Subdivision, at DOT#: (****) MP (****). (**Street**) in (**City**), (***) County, (**State**) (the "Property"), (description of scope of work), beginning (**) feet from the (****) and (***) right of way, (the "Project").

WHEREAS, CSX is willing to grant to Licensee the limited right and permission to enter upon the Property for the limited purpose of performing the Project.

NOW THEREFORE, CSX hereby grants to Licensee the right and permission to enter upon the Property for the purpose of performing said Project, subject to the terms and conditions set forth below:

1. PROJECT: The Project shall be performed at the entire cost and expense of Licensee, in accordance with good and sound engineering practices, to the satisfaction of CSX's Division Engineer or his or her duly authorized representative ("Division Engineer") and in a manner to avoid accidents, damages, unnecessary delays to or interference with train traffic of CSX. Prior to entry, Licensee shall notify the Division Engineer's representative and arrange for flagging protection in accordance to Sections 5 and 6 of this Agreement. Licensee shall not dig in the ballast line or within the tracks loading influence area, or otherwise disturb the track structure. Licensee and Licensee's employees, agents, contractors and other representatives (collectively, "Agents") shall maintain in their possession a copy of this Agreement at all times during their occupation of the Property.

2. INDEMNITY:

2.1 Licensee hereby assumes risk of and agrees to indemnify, defend, protect and save CSX and CSX's Affiliates harmless with respect to any and all attorneys' fees, liability, claims, demands, payments, suits, actions, recoveries, penalties, costs, legal expenses, judgments, settlements, and damages of every nature, degree, and kind (including direct, indirect, consequential, incidental, and punitive damages) for:

2.1.1 Personal injury, including, but not limited to bodily injury to or death of any person or persons whomsoever, including the agents, servants, Affiliates or employees of the parties;

2.1.2 The loss or damage to any property whatsoever, including property owned or in the care, custody or control of the parties hereto or their respective Affiliates;

2.1.3 Any environmental damage and any related remediation brought or recovered against CSX or any of its Affiliates; and

2.1.4 Any and all other losses or damages; arising directly or indirectly from the presence of Licensee or its Agents on or about the Property, whether or not attributable in whole or part to the negligence, gross negligence, or intentional misconduct of CSX or its Affiliates.

2.2 The parties waive any and all right or opportunity to contest the enforceability of this Section and agree that, in the event this Section, or any part of this Section, is found unenforceable by the final, unappealable judgment of a court of competent jurisdiction, this Section shall be construed so as to be enforceable to the maximum extent permitted by applicable law. In the event that such court of competent jurisdiction finds that Florida statutory construction contract indemnity monetary limits apply to this Agreement with respect to Licensee's indemnification of CSX and its Affiliates for liability caused in whole or in part by any act, omission or default by CSX or its Affiliates, the parties hereto agree that such limit shall be equal to the limits (exclusive of deductibles) of the applicable insurance required by Sections 3 and 4 of this Agreement. The parties acknowledge and agree that this monetary limit,

if required, bears a commercially reasonable relationship to this Agreement, in so far as, among other factors, the parties have taken into account the availability and cost of insurance and other risk transference devices, the scope of the Project, the risks associated with the Project, and the compensation and any other benefits exchanged between the parties in connection with this Agreement.

2.2.1 Licensee shall comply with any federal, state, or local laws, statutes, codes, ordinances, rules, and regulations applicable to its presence or performance of any activity on the Property and agrees to indemnify, defend, and hold CSX and its Affiliates harmless with respect to any fines, penalties, liabilities, or other consequences for its failure to so comply.

2.2.2 For the purpose of this Agreement, the term "Affiliates" includes all entities, directly or indirectly owned or controlled by, or under common control of a party or its respective officers, directors, employees and agents, and in the case of CSX, includes CSX Corporation, CSX and their Affiliates and their respective officers, directors, employees and agents.

2.2.3 The provisions of this Section shall survive the termination or expiration of this Agreement.

3. GENERAL LIABILITY INSURANCE: Licensee shall procure and maintain, at its expense: (i) statutory Worker's Compensation and Employers Liability Insurance with available limits of not less than $1,000,000.00, which insurance must contain a waiver of subrogation against CSX and its Affiliates; (ii) Commercial General Liability coverage (inclusive of contractual liability) with available limits of not less than $5,000,000.00 in combined single limits for bodily injury and property damage and covering the contractual liabilities assumed under this Agreement; (iii) business automobile liability insurance with available limits of not less than $1,000,000.00 combined single limit for bodily injury and/or property damage per occurrence; and (iv) such other insurance as CSX may reasonably require. Upon request, Licensee shall provide CSX with a copy of Licensee's applicable insurance policies. A policy endorsement naming CSX as an additional insured and specifying such coverage shall be furnished to CSX prior to the execution of this Agreement, and the required coverage will be kept in force until all of Licensee's obligations under this Agreement have been fully discharged and fulfilled, or until Licensee shall have been specifically released by a written instrument signed by an authorized officer of CSX. Licensee shall also provide CSX with a copy of the insurance policies. The insurance policies shall provide that the insurance carrier must give CSX notice at least thirty (30) days in advance of cancellation of coverage, of any change in coverage, or of cancellation of the policy. Notwithstanding any provisions of this Section, the liability assumed by Licensee shall not be limited to the required insurance coverage.

4. RAILROAD PROTECTIVE LIABILITY INSURANCE: Licensee agrees to purchase Railroad Protective Liability Insurance in accordance with CSX's requirements (attached as Exhibit A and incorporated into this Agreement) for the benefit of CSX for Licensee's operations under this Agreement. Licensee shall furnish an appropriate Insurance policy (and required endorsements), as the case may be, with the return of this executed Agreement.

5. PRIOR NOTIFICATION: Licensee or Licensee's Agents shall notify CSX's Roadmaster at least 10 days prior to requiring entry on the Property and shall abide by the instructions of the Division Engineer, or his or her authorized representative. The Roadmaster, (*****), can be contacted at: (*******), to schedule flagging services.

6. CLEARANCES: Neither Licensee nor Agents shall perform any Project or place or operate any equipment of Licensee or Agents at a distance closer than fifty (50) feet from the center of any track, without the prior approval of the Division Engineer. The Division Engineer may require protective services or such other services as deemed necessary or appropriate. Equipment shall be moved across CSX's track(s) only at a public crossing unless prior arrangements have been made with the Division Engineer and a Private Crossing Agreement is fully executed and in place. Licensee and Agents shall take all precautions

necessary to avoid interference with or damage to CSX's property and signal and communication facilities during their performance of the Project.

7. PROTECTIVE SERVICES: If protective services, such as flagging protection, are required by CSX, Licensee shall make arrangements with the Roadmaster to furnish such personnel, flagman or watchman, that in the Roadmaster's opinion may be necessary to protect the facilities and traffic of CSX during the performance of the Project. Licensee shall pay for the cost of such services, including all applicable surcharges and additives. These services are estimated to be $_____, as supported by the attached estimate.

8. PAYMENT FOR PROTECTIVE SERVICES: Payment shall be made by Licensee in accordance with the following designated option:

( ) Option 1: Licensee shall make an advance deposit of funds based on an estimate of the cost of protective or other services as determined by CSX. The cost for CSX's services shall then be assessed by CSX against this advance deposit. Upon completion of the Project, any unused funding will be returned to Licensee. Notwithstanding the foregoing, in the event Licensee performs any Project work without permission or without protective services (such as flagging protection) as may be required by CSX, no portion of Licensee's advance deposit will be refunded. If CSX's costs exceed the advance deposit(s), a request will be made to Licensee for additional funds or an invoice will be issued to Licensee for final payment. Licensee shall remit payment to CSX within thirty (30) days of receipt of either a request for additional funds or an invoice.

( ) Option 2: Licensee shall promptly reimburse CSX for the cost of protective or other services on an as-incurred basis, including all applicable surcharges, upon receipt of bill(s) therefor.

9. ENVIRONMENTAL: This Agreement does not include and expressly excludes the performance of any site investigation activities designed to determine environmental conditions on, about or beneath the Property. Precluded activities include performing soil borings for purposes other than geotechnical investigation, obtaining soil, sediment, groundwater and surface water samples, and conducting field or laboratory analyses of any soil, sediment, groundwater or surface water samples obtained from CSX property to identify chemical composition or environmental condition. If any type of environmental investigation is desired, a separate right of entry agreement issued through CSX's Environmental Department must be secured.

10. CLAIMS: Licensee shall, or shall require Agents, to promptly notify the Division Engineer of any loss, damage, injury or death arising out of or in connection with the Project.

11. REMEDIATION: It is understood and agreed that, upon completion of the Project, the Property shall be left in a condition satisfactory to Division Engineer or his or her duly authorized representative.

12. SAFETY:

12.1 All personnel entering the Property must comply with CSX safety rules and requirements to include, without exception, the wearing of hard hats and approved safety shoes and safety glasses with side shields. Anyone not in compliance with these rules and regulations will be asked to leave the Property.

12.2 Before performing any work authorized by this Agreement, Licensee, at its sole cost and expense, shall obtain all necessary permit(s) (including but not limited to zoning, building, construction, health, safety or environmental matters), letter(s) or certificate(s) of approval. Licensee expressly agrees and warrants that it shall conform and limit its activities to the terms of such permit(s), approval(s) and authorization(s), and shall comply with all applicable ordinances, rules, regulations, requirements and laws of any governmental authority (state, federal or local) having jurisdiction over Licensee's activities, including the location, contact, excavation and protection regulations of the Occupational Safety and Health Act (OSHA) (29 CFR 1926.651(b), et al.), and State "One Call" -"Call Before You Dig" requirements.

13. TERM: This Right-of-Entry Agreement and the permission conferred and the license granted by it does not constitute a grant of permanent easement and shall terminate upon completion of the Project or at midnight, , whichever occurs first, unless extended in writing by CSX. In the event Licensee fails to comply with terms and provisions of this Agreement, Licensee agrees to pay and agrees that CSX shall be entitled to recover costs and expenses incurred by CSX, including legal fees and expenses, to enforce the terms of this Agreement.

14. SEVERABILITY: The parties agree that if any part, term or provision of the Agreement is held to be illegal, unenforceable or in conflict with any applicable federal, state, or local law or regulation, such part, term or provision shall be severable, with the remainder of the Agreement remaining valid and enforceable. If any provision or any part of a provision of the Agreement shall be finally determined to be superseded, invalid, illegal, or otherwise unenforceable pursuant to any applicable law, ordinance, rule or regulation, such determination shall not impair or otherwise affect the validity, legality, or enforceability of the remaining provision or parts of the provision of the Agreement, which shall remain in full force and effect as if the unenforceable provision or part were deleted.

15. ENTIRE AGREEMENT: This Agreement embodies the entire understanding of the parties, may not be waived or modified except in a writing signed by authorized representatives of both parties, and supersedes all prior or contemporaneous written or oral understandings, agreements or negotiations regarding its subject matter.

16. NOTICES: All notices, consents and approvals required or permitted by this agreement shall be in writing and shall be deemed delivered; upon personal delivery, upon the expiration of three (3) business days following mailing by U.S. first class mail, or upon the next business day following mailing by a nationally recognized overnight carrier, to the Licensee at the address above, and to Licensor at the address shown on Page 1, or at such other addresses as either party may designate by delivery of prior notice to the other party .

17. TERMINATION: CSX shall have the right at any time and at its sole discretion to terminate this Agreement upon notice to Licensee.

18. WAIVER: If either party fails to enforce its respective rights under this Agreement, or fails to insist upon the performance of the other party's obligations hereunder, such failure shall not be construed as a permanent waiver of any rights or obligations in this Agreement.

19. GOVERNING LAW; VENUE: This Agreement shall be governed by and construed under the laws of the State of Florida, without regard to the choice of law provisions thereof. Venue for any action arising from, or brought to enforce, this Agreement, shall vest exclusively in the state or federal courts located in Duval County, Florida, and the parties agree to submit to the personal jurisdiction of any state or federal court located in Duval County, Florida.

20. NO ASSIGNMENT: Notwithstanding anything to the contrary contained in this Agreement, Licensee shall not permit Agents to enter the Property without first requiring Agents to agree in writing to comply with all of the terms of this Agreement. Notwithstanding the foregoing, Licensee shall continue to be responsible for insuring that Agents comply with all of the terms and conditions of this Agreement and shall indemnify and hold CSX harmless for any damages described in Section 2 above caused in whole or in part by such subcontractor. Assignment of this Agreement to any party other than Agents in accordance with this Section shall not be permitted except upon the prior written consent of CSX, which consent may be granted or withheld at CSX's sole discretion. This Agreement shall be binding upon the parties and their respective successors and assigns.

IN WITNESS WHEREOF, the parties hereto have caused this Agreement to be executed as of the day and year first above written.

Witness for CSX Transportation:

_____

CSX TRANSPORTATION, INC.

By: _____

Name:

Title:

Witness for: ( )

_____

( ):

By: _____

Print/Type Name:

Print/Type Title:

Who, by the execution hereof, affirms that he/she has the authority to do so and to bind the [*] to the terms and conditions of this Agreement.

SP-20. DRAFT PROJECT LABOR AGREEMENT (PLA)

PROJECT LABOR AGREEMENT
COVERING THE
NEW YORK STATE DEPARTMENT OF TRANSPORTATION
I-81 VIADUCT PROJECT PHASE 1 CONTRACT 2
NYSDOT CONTRACT NUMBER D900056
(PIN 3501.91)

TABLE OF CONTENTS

ARTICLE 1 – PREAMBLE 1
SECTION 1. PARTIES TO THE AGREEMENT 2

ARTICLE 2 – GENERAL CONDITIONS 2
SECTION 1. DEFINITIONS 2
SECTION 2. CONDITIONS FOR AGREEMENT TO BECOME EFFECTIVE 3
SECTION 3. ENTITIES BOUND & ADMINISTRATION OF AGREEMENT 3
SECTION 4. SUPREMACY CLAUSE 3
SECTION 5. LIABILITY 3
SECTION 6. THE NYSDOT 4
SECTION 7. AVAILABILITY AND APPLICABILITY TO ALL BIDDERS AND CONTRACTORS 4

ARTICLE 3 - SCOPE OF THE AGREEMENT 4
SECTION 2. TIME LIMITATIONS 6
SECTION 3. EXCLUDED EMPLOYEES 6
SECTION 4. NON-APPLICATION TO CERTAIN ENTITIES 7

ARTICLE 4 - UNION RECOGNITION AND EMPLOYMENT 8
SECTION 1. PRE-HIRE RECOGNITION 8
SECTION 2. UNION REFERRAL 8
SECTION 3. NON-DISCRIMINATION IN REFERRALS 9
SECTION 4. MINORITY/ FEMALE REFERRALS 9
SECTION 5. INCENTIVE BASED HIRING PREFERENCES 10
SECTION 6. CROSS AND QUALIFIED REFERRALS 10
SECTION 7. UNION DUES 10
SECTION 8. CRAFT FOREPERSONS AND GENERAL FOREPERSONS 11

ARTICLE 5 - UNION REPRESENTATION 11
SECTION 1. LOCAL UNION REPRESENTATIVE 11
SECTION 2. STEWARDS 11
SECTION 3. LAYOFF OF A STEWARD 12

ARTICLE 6 - MANAGEMENT'S RIGHTS 12
SECTION 1. RESERVATION OF RIGHTS 12
SECTION 2. MATERIALS. METHODS & EQUIPMENT 12

ARTICLE 7 - WORK STOPPAGES AND LOCKOUTS 13
SECTION 1. NO STRIKES-NO LOCK OUT 13
SECTION 2. DISCHARGE FOR VIOLATION 13
SECTION 3. NOTIFICATION 13
SECTION 4. EXPEDITED ARBITRATION 13
SECTION 5. ARBITRATION OF DISCHARGES FOR VIOLATION 15

ARTICLE 8 - LABOR MANAGEMENT COMMITTEE 15
SECTION 1. SUBJECTS 15
SECTION 2. COMPOSITION 15

ARTICLE 9 - GRIEVANCE & ARBITRATION PROCEDURE 15
SECTION 1. CLOSE COOPERATION 15
SECTION 2. IMPORTANCE TO ALL PARTIES 15
SECTION 3. PROCEDURE 15
SECTION 4. LIMITATION AS TO RETROACTIVITY 17

ARTICLE 10 - JURISDICTIONAL DISPUTES 17

SECTION 1. ASSIGNMENT 17
SECTION 2. PROCEDURE FOR SETTLEMENT OF DISPUTES 17
SECTION 3. NO INTERFERENCE OF WORK 17
SECTION 4. PRE-JOB CONFERENCE 17

ARTICLE 11 - WAGES AND BENEFITS 18
SECTION 1. CLASSIFICATION AND BASE HOURLY RATE 18
SECTION 2. EMPLOYEE BENEFITS/SUPPLEMENTS 18

ARTICLE 12 - HOURS OF WORK, PREMIUM PAYMENTS, SHIFTS AND HOLIDAYS 20
SECTION 1. WORK WEEK AND WORK DAY 20
SECTION 2. OVERTIME/PREMIUM PAY 20
SECTION 3. SHIFTS 21
SECTION 4. HOLIDAYS 21
SECTION 5. REPORTING PAY 22
SECTION 6. PAYMENT OF WAGES 22
SECTION 7. EMERGENCY WORK SUSPENSION 23
SECTION 8. INJURY/DISABILITY 23
SECTION 9. TIME KEEPING 23
SECTION 10. MEAL PERIOD 23
SECTION 11. BREAK PERIODS 23

ARTICLE 13 – APPRENTICES 23
SECTION 1. RATIOS 23
SECTION 2. DEPARTMENT OF LABOR 24

ARTICLE 14 - SUBCONTRACTING 24

ARTICLE 15 - DIVERSITY 24

ARTICLE 16 - HELMETS TO HARDHATS 24
SECTION 1. 24
SECTION 2. 25

ARTICLE 17 - SAFETY PROTECTION OF PERSON AND PROPERTY 25
SECTION 1. SAFETY AND SECURITY REQUIREMENTS 25
SECTION 2. CONTRACTOR RULES 25
SECTION 3. INSPECTIONS 25

ARTICLE 18 - NO DISCRIMINATION 25
SECTION 1. COOPERATIVE EFFORTS 25
SECTION 2. LANGUAGE OF AGREEMENT 26

ARTICLE 19 - GENERAL TERMS 26
SECTION 1. PROJECT RULES 26
SECTION 2. TOOLS OF THE TRADE 26
SECTION 3. SUPERVISION 26
SECTION 4. TRAVEL ALLOWANCES 26
SECTION 5. FULL WORK DAY 26

ARTICLE 20 - COOPERATION 27

ARTICLE 21 - SAVINGS AND SEPARABILITY 27
SECTION 1. THIS AGREEMENT 27
SECTION 2. THE BID SPECIFICATIONS 27
SECTION 3. NON-LIABILITY 27
SECTION 4. NON-WAIVER 27

ARTICLE 22 - FUTURE CHANGES IN SCHEDULE A AREA CONTRACTS 28
SECTION 1. CHANGES TO AREA CONTRACTS 28
SECTION 2. LABOR DISPUTES DURING AREA CONTRACT NEGOTIATIONS 28

ARTICLE 23 - WORKERS' COMPENSATION ADR 28
SCHEDULE A – LOCAL COLLECTIVE BARGAINING AGREEMENTS 32
SCHEDULE B – LETTER OF ASSENT 35
SCHEDULE C – PRE-JOB QUESTIONAIRE 36
SCHEDULE D - SIDE LETTER OF AGREEMENT 45
SCHEDULE E - WAIVER OF EMPLOYEE BENEFIT CONTRIBUTIONS 49

PROJECT LABOR AGREEMENT
COVERING THE
I-81 VIADUCT PROJECT – PHASE 1, CONTRACT 2

ARTICLE 1 – PREAMBLE

WHEREAS, New York State Department of Transportation ("NYSDOT"), desires to provide for the efficient, safe, quality, and timely completion of construction described herein relating to the I-81 Viaduct Project - Phase 1, Contract 2 ("The Project") in a manner designed to afford the lowest reasonable costs to the NYSDOT, and the public it represents, and the advancement of permissible statutory objectives;

WHEREAS, New York State Department of Transportation has engaged Seeler Engineering, P.C. ("Seeler") to undertake a study of whether the use of a Project Labor Agreement will best serve the NYSDOT's interest in obtaining the best work at the lowest possible price, preventing favoritism, fraud and corruption, and other considerations such as the impact of delay, the possibility of cost saving advantages, and any local history of labor unrest; and

WHEREAS, Seeler's *Report Project Labor Agreement Benefits Analysis*, (the "study") dated October 5, 2022 ("*Repor*t"), concluded that use of a Project Labor Agreement would provide the NYSDOT with measurable economic benefits and would promote the NYSDOT's interest in obtaining the best work at the lowest prices as well as preventing favoritism, fraud and corruption; and

WHEREAS, the NYSDOT has carefully reviewed and considered Seeler's *Report* and has issued a "Project Labor Agreement Record Review and Determination I-81 Viaduct Project – Phase 1, Contract 2," dated November 28, 2022, which finds, among other things, that New York State's interest in obtaining the best work at the lowest possible price, preventing favoritism, fraud and corruption, preventing the impact of delay, avoiding labor unrest, and gaining measurable management flexibility and benefits are best met by requiring a Project Labor Agreement and, therefore, directs that a Project Labor Agreement be made part of the Project; and

WHEREAS, this Project Labor Agreement will foster the achievement of these goals, inter alia, by:

(1) providing a mechanism for achieving the most cost efficient and effective means of construction, including direct and indirect labor and other cost savings;

(2) avoiding the costly delays of potential strikes, slowdowns, walkouts, picketing and other disruptions arising from work disputes and promote labor harmony and peace on the jobsite for the duration of the covered work;

(3) standardizing the terms and conditions governing the employment of labor on covered work;

(4) permitting wide flexibility in work scheduling and shift hours and times;

(5) providing comprehensive and standardized mechanisms for the settlement of work disputes, including those relating to jurisdiction;

(6) furthering public policy objectives as to improved employment opportunities in the construction industry for residents, minorities, women and the economically disadvantaged;

(7) ensuring a reliable source of skilled and experienced labor;

(8) expediting the construction process, enhancing the NYSDOT's ability to keep existing facilities functional, and otherwise minimizing public inconveniences relating to that construction; and

WHEREAS, the signatory Unions desire the stability, security and work opportunities afforded by a Project Labor Agreement; and

WHEREAS, the Parties desire to maximize safety conditions relating to the covered work;

NOW, THEREFORE, the Parties enter into this Agreement:

SECTION 1. PARTIES TO THE AGREEMENT

This is a Project Labor Agreement ("Agreement") to be entered into by and between the NYSDOT's Prime Contractor (PC) for this Project for certain construction work to be performed as part of the I-81 Viaduct Project - Phase 1, Contract 2 (as defined below), and the Central and Northern New York Building and Construction Trades Council, ·AFL-CIO, on behalf of itself and its affiliated local union members; and the signatory Local Unions on behalf of themselves and their members.

ARTICLE 2 – GENERAL CONDITIONS

SECTION 1. DEFINITIONS

Throughout this Agreement, the Union parties (the signatory Local Unions and Council) are referred to singularly and collectively as "Union(s)"; where specific reference is made to "Local Unions," that phrase is sometimes used; the term "Contractor(s)" shall include the NYSDOT's Prime Contractor and its subcontractors of whatever tier, engaged in on-site construction work within the scope of this Agreement as defined in Article 3; the NYSDOT's Prime Contractor on this Project, individually, is referred to as the "PC"; New York State Department of Transportation is referred to as the "NYSDOT" or "Owner"; the Central and Northern New York Building and Construction Trades Council, AFL-CIO is referred to as the "Central and Northern New York Council," and the work covered by this Agreement (as defined in Article 3) is referred to as the "Project" and/or "Project Work"

Wherever in this Agreement the PC is authorized or permitted to take any action, such action may be taken by either the PC or its designee. Whenever in this Agreement the NYSDOT is authorized or permitted to take any action, such action may be taken by either the NYSDOT or its designee.

SECTION 2. CONDITIONS FOR AGREEMENT TO BECOME EFFECTIVE

This Agreement shall not become effective unless each of the following conditions are met: (1) the Agreement is approved by the Building and Construction Trades Department, AFL-CIO and the NYS Building & Construction Trades Council: (2) signed by the Central and Northern New York Council and those Local Unions having jurisdiction over the Project Work and which are listed on the signature pages to this Agreement; (3) the Agreement is authorized by the NYSDOT; and (4) the Agreement is signed by the PC.

SECTION 3. ENTITIES BOUND & ADMINISTRATION OF AGREEMENT

This Agreement shall be binding on all signatory Unions, and their affiliates and all Contractors performing on-site Project Work as defined in Article 3. The PC shall include in any contract that it lets for performance during the term of this Agreement, a requirement that its subcontractors, of whatever tier, become bound by this Agreement with respect to subcontracted work performed within the scope of Article 3. Covered Contractors (including subcontractors of any tier) shall execute the Letter of Assent form attached to this Agreement as Schedule B. This Agreement shall be administered by the PC, for the benefit of NYSDOT, which is an intended third-party beneficiary of this Agreement.

SECTION 4. SUPREMACY CLAUSE

This Agreement, together with the local Collective Bargaining Agreements listed in the appendix hereto as Schedule A, represents the complete understanding of all parties and supersedes any national agreement, local agreement or other collective bargaining agreement of any type which would otherwise apply to Project Work, in whole or in part, except that in the event a Contractor is signatory to the NTL Article of Agreement, the National Stack/Chimney Agreement, the National Cooling Tower Agreement, the UA/IBEW Joint National Agreement for Instrument and Control Systems Technicians, or the National Agreement of the International Union of Elevator Constructors those agreements shall apply (except that notwithstanding the foregoing National Agreements, Articles 7, 9 and 10 of this Agreement shall still apply). Where a subject covered by the provisions, explicit or implicit, of this Agreement is also covered by a provision in Schedule A, the provisions of this Agreement shall prevail. It is further understood that no Contractor shall be required to sign any other labor agreement as a condition of performing Project Work. No practice, understanding or agreement between a Contractor and a Local Union which is not explicitly set forth in this Agreement shall be binding on Project Work unless endorsed in writing by the PC. Nothing in this Agreement requires employees to join a union or pay dues or fees to a union as a condition of working on the covered project. This Agreement is not, however, intended to supersede independent requirements in applicable local union agreements as to contractors that are otherwise signatory to those agreements and as to employees of such employers performing covered work.

SECTION 5. LIABILITY

The liability of any Contractor and the liability of any Union under this Agreement shall be several and not joint. The PC shall not be liable for any violations of this Agreement by any other

Contractor nor shall any Contractor be liable for any violations of this Agreement by any other Contractor; and the Central and Northern New York Council and Local Unions shall not be liable for any violations of this Agreement by any other Union. No grievance shall be brought directly against NYSDOT under this Agreement. Further, no arbitration decision or award may provide retroactivity of more than twenty (20) days prior to the date of service of a written grievance as described herein.

SECTION 6. THE NYSDOT

The NYSDOT shall require in its bid specifications for the Prime Contractor for Project Work as defined in Article 3 that the successful bidder, and its subcontractors of whatever tier become bound by this Agreement. Neither the NYSDOT nor its designee shall be liable in any manner under this Agreement. It is understood that nothing in this Agreement shall be construed as limiting the discretion the NYSDOT otherwise has in determining which Prime Contractor shall be awarded the contract for Project Work. It is further understood that the NYSDOT has sole discretion at any time to terminate, delay or suspend, in whole or part, Project Work, or to undertake any of the work itself, without regard to this Agreement.

SECTION 7. AVAILABILITY AND APPLICABILITY TO ALL BIDDERS AND CONTRACTORS

The Unions agree that this Agreement will be made available to, and will fully apply to any successful bidder for Project Work, and its subcontractors, who become bound thereto, without regard to whether that successful bidder and/or its subcontractors perform work at other sites on either a union or non-union basis and without regard to whether employees of such successful bidder and/or its subcontractors are, or are not, members of any unions, This Agreement shall not apply to the work of any Contractor which is not Project Work, as defined in Article 3, Section 1.

ARTICLE 3 - SCOPE OF THE AGREEMENT

The Project Work covered by this Agreement shall be as defined and limited by the following sections of this Article.

SECTION 1. PROJECT WORK

Subject to section 3(c) of this Article, this Agreement shall apply to all on site work related to the I-81 Viaduct Project – Phase 1, Contract 2 Project Work as designated by the NYSDOT Contract Number D900056 (NYSDOT Project I.D. No. 3501.91) in its bid specifications (herein referenced as "Project Work"). The scope of Project Work may be subject to change as this work progresses or as circumstances change, and the scope of the PC's work is changed. Nevertheless, the· parties understand that generally included within covered Project Work will be as follows.

- Improvements to the new section of I-81 (former I-481) between I-690 and Kirkville Road (Interchange 5) including:
    - Construction of a third southbound (auxiliary) lane between Kirkville Road (Interchange 5 southbound on-ramp) and I-690 (Interchange 4 southbound

off-ramp), including widening and rehabilitation of the existing bridge over the CSX railroad tracks
    - Construction of a third northbound (auxiliary) lane between I-690 (Interchange 4 northbound onramp) and Kirkville Road (Interchange 5 northbound off-ramp), including widening and rehabilitation of the bridge over the CSX railroad tracks
- Improvements to the new section of I-81 (former I-481) between Interchange 4 (I-690) and Interchange 3 (Dewitt/Fayetteville) including:
    - Reconstruct portions of the 4-lane to 3-lane merge between Interchange 4 (I-690 eastbound ramp) along I-81 southbound (former I-481) to Kinne Road bridge
    - Reconstruct and lengthen the auxiliary lane along I-81 northbound (former I-481 northbound) from Interchange 3 (Genesee Street to I-81 northbound on ramp) to Kinne Road bridge
- Reconstruct portions of Interchange 3 (Dewitt/Fayetteville) including:
    - Reconstruct and widen I-81 southbound (former I-481) off ramp to East Genesee Street westbound and install a traffic signal at the intersection of the off ramp and East Genesee Street. Reconstructed ramp to include turning lanes to East Genesee Street in both the east and west direction.
    - Remove the off ramp from I-81 southbound (former I-481) to East Genesee Street eastbound
    - Reconstruct a portion of the East Genesee Street westbound to I-81 southbound (former I-481) ramp and merging lane
    - Reconstruct and widen a portion of East Genesee Street eastbound from approximately 250’ west of Ambergate Road to the I-81 southbound (former I-481) bridge
- Improvements to the NYS Route 5/92 intersection (Lyndon Corners) including:
    - Construct an additional lane on East Genesee Street eastbound and Highbridge Road eastbound, beginning at approximately 600’ west of the NYS Route 5/92 intersection continuing approximately 1000’ east of the NYS Route 5/92 intersection
- Reconstruct the existing I-81/I-481 Southern Interchange including:
    - Demolish the existing ramp that connects northbound I-81 to northbound I-481
    - Demolish the existing ramp that connects southbound I-481 to southbound I-81
    - Demolish the existing ramp that connects southbound I-481 to northbound I-81
    - Demolish the existing ramp that connects East Brighton Avenue to existing I-81 northbound
    - Relocate existing East Glen Avenue to align with new I-81 southbound (former I-481) ramp to East Brighton Avenue and installation of a traffic signal; this work to include four ramps at East Glen Avenue: BL 81 southbound (former I-81) to East Glen Avenue, East Glen Avenue to BL 81 southbound (former I-81), I-81 northbound to East Glen Avenue and East Glen Avenue to BL 81 northbound (former I-81)

- Construct a new ramp from existing I-81 northbound to new BL 81 northbound (former I-81)
- Construct a new 2 lane portion of BL 81 southbound (former I-81) to I-81 southbound
- Construct a new ramp from BL 81 southbound (former I-81 to new I-81 northbound (former I-481)
- Construct a new 2 lane mainline roadway from existing I-81 northbound to new I-81 northbound (former I-481)
- Construct a new 2 lane mainline roadway from new I-81 southbound (former I-481) to I-81 southbound
- Remove five existing bridges and construct six new bridges
- One bridge replacement o
- Minor Rehabilitation of 1 bridge

To the extent there is any conflict between the above general description and the NYSDOT's express designation of work (or the absence of any designation) in its bid specifications for a Prime Contractor, the NYSDOT's express designation (or absence of designation) shall be controlling and determinative of whether work is Project Work within the scope of this Agreement. Any work not included in the NYSDOT's PC bid specifications is not covered Project Work under this Agreement.

Specifically excluded from coverage under this Agreement is: (1) all work relating to bids solicited and/or work awarded prior to the execution of this Agreement by the parties and/or approval of it by the NYSDOT, (2) maintenance and repair work performed in the normal course of the NYSDOT's operations; (3) any work to be completed by the NYSDOT or any of its operating contractors and/or vendors; (4) off-site work not subject to coverage under Section 220 of the New York State Labor Law.

SECTION 2. TIME LIMITATIONS

This Agreement shall be limited to Project Work performed under the NYSDOT's PC contract (subject to exclusions noted herein) provided that this Agreement is approved by the NYSDOT and by the Central and Northern New York Council and each Local Union and shall terminate when New York State Department of Transportation determines that the PC has completed all work of his contract and declares the work covered by this agreement is complete. This Agreement may be extended by mutual written agreement of the parties.

SECTION 3. EXCLUDED EMPLOYEES

Notwithstanding the provisions of Section 1, the following persons/entities (and the work performed by them) are not subject to the provisions of this Agreement, even though performing work on or in connection with the Project:

a. Superintendents, supervisors (excluding general and forepersons specifically covered by a craft's Schedule A), engineers, inspectors and testers, quality control/ assurance personnel, timekeepers, mail carriers, clerks, office workers, messengers, guards,

technicians, non-manual employees, and all professional, engineering, administrative and management persons;

b. The NYSDOT, any State or Federal agency, authority or entity or any municipality or other public employer, and any of their employees; the NYSDOT's designee and its employees; and any operations contractor, and its employees, employed by the NYSDOT,

c. Entities (and their employees) engaged in off-site manufacture, modifications, repair, maintenance, assembly, painting, handling or fabrication of Project components, materials, equipment or machinery or involved in deliveries to and from site of Project Work including granular materials, concrete and/or ready-mix, asphaltic materials, soils and spoils (dedicated off-site work to which§ 220 of New York's Labor Law applies is not excluded from coverage);

d. Equipment suppliers (and their employees) performing and/or assisting in on-site equipment installation (where required by the supplier or as needed for warranty coverage) and on-site equipment warranty work, including but not limited to security and fire alarm systems suppliers, audio/visual equipment suppliers, ticketing systems equipment suppliers, and vendor related food service equipment suppliers;

e. Entities (and their emp1oyees) engaged in geophysical testing;

f. Entities (and their employees) engaged in laboratory, specialty testing, inspections, or surveying pursuant to a professional services agreement between the NYSDOT, the PC, or any of the NYSDOT's other professional consultants, and such laboratory, testing, inspection or surveying firm.

g. Individuals engaged in on-site surveying as direct hires of a signatory Contractor, rather than pursuant to a professional services contract with the NYSDOT, the PC or any of the NYSDOT's other professional consultants, are covered by this Agreement; and

h. Third parties (and their employees) engaged in ancillary Project Work performed by third parties such as electric utilities, gas utilities, water, telephone companies, and railroads.

SECTION 4. NON-APPLICATION TO CERTAIN ENTITIES

This Agreement shall not apply to the parents, affiliates, subsidiaries, or other joint or sole ventures of any Contractor which do not perform Project Work. It is agreed, for the purposes of this Agreement only, that this Agreement does not have the effect of creating any joint employment, single employer or alter ego status among the NYSDOT or its designee, the PC and/or any other Contractor. The Agreement shall not apply to the NYSDOT or its designee or any state

or federal agency, authority, or other municipal or public entity and nothing contained herein shall be construed to prohibit or restrict the NYSDOT or their employees or any NYSDOT, or state or federal authority, agency or entity and its employees or Contractors from performing on or off-site work related to the Project. As the contracts which comprise Project Work are completed and accepted by the NYSDOT and/or its designee, the Agreement shall not have further force or effect on such items or areas except where inspections, additions, repairs, modifications, check-out and/or warranty work are assigned in writing (copy to Local Union involved) by the PC for explicit performance under the terms of this Agreement.

ARTICLE 4 - UNION RECOGNITION AND EMPLOYMENT

SECTION 1. PRE-HIRE RECOGNITION

The Contractors recognize the signatory Unions as the sole and exclusive bargaining representatives of all craft employees who are performing Project Work within the scope of this Agreement as defined in Article 3. With respect to craft employees performing work which falls within the jurisdiction of a non-signatory craft, the Council shall be the sole and exclusive bargaining representative for those employees (and throughout this Agreement references to "Local Union" shall include the Council acting in that capacity).

SECTION 2. UNION REFERRAL

The Contractors agree to hire craft employees for Project Work covered by this Agreement through the job referral systems and hiring halls (where the referrals meet the qualifications set forth in items 1, 2 and 4 of subparagraph B) established in the applicable Local Unions' area collective bargaining agreements (listed in Schedule A to this Agreement). Notwithstanding this, the Contractors shall have sole right to determine the competency of all referrals; the number of employees required; the selection of employees to be laid-off (except as provided in Article 5, Section 3); and the sole right to reject any applicant referred by a Local Union, subject to any required show-up allowance. In the event that a Local Union is unable to fill any request for qualified employees within a 48-hour period after such requisition is made by the Contractor (Saturdays, Sundays and holidays excepted), the Contractor may employ qualified applicants from any other available source. In the event that the Local Union does not have a job referral system, the Contractor shall give the Local Union first preference to refer applicants, subject to the other provisions of this Article. The Contractor shall notify the Local Union of Project craft employees hired within its jurisdiction from any source other than referral by the Union.

A Contractor may request by name, and the Local must honor, referral of persons who have applied to the Local for Project Work and who meet the following qualifications:

(1) possess any license required by NYS law for the Project Work to be performed;
(2) have worked a total of at least 1000 hours in the Construction craft during the prior 3 years;
(3) were on the Contractor's active payroll for at least 60 out of the 180 calendar days prior to the contract award;
(4) have the ability to safely perform the basic functions of the applicable trade.

No more than 25 per centum of the employees covered by this Agreement, per Contractor by craft, shall be hired through the special provisions above (any fraction shall be rounded to the next highest whole number). Employees hired under ARTICLE 4 SECTION 5. INCENTIVE BASED HIRING PREFERENCES shall not be subject to qualifications requirements (2) and (3) above. Craft forepersons and/or general forepersons may be included in this 25 percent. If requested by the appropriate Union, a Contractor utilizing this provision for by-name referrals will furnish the Union with a written certification that the individuals requested for referral meet the requirements of (1) - (4) above.

It is understood that the first three employees per Contractor by craft shall be obtained through the Local Unions' job referral system and hiring halls; the 4th employee may be requested under the special provisions set forth above; and so on.

C. Notwithstanding the foregoing, a Contractor (including a subcontractor of any tier) who employs craft labor to perform work which falls within the craft jurisdiction of a non-signatory craft may obtain its workforce from any qualified source, including completely from its pre-existing workforce. Where appropriate, that Contractor will consider qualified participants in NYSDOT approved training programs for work opportunities.

SECTION 3. NON-DISCRIMINATION IN REFERRALS

The Local Unions represent that their hiring halls and referral systems will be operated in a non-discriminatory manner and in full compliance with all applicable federal, state and local laws and regulations which require equal employment opportunities. Referrals shall not be affected in any way by the rules, regulations, bylaws, constitutional provisions or any other aspects or obligations of union membership, policies or requirements and shall be subject to such other conditions as are established in this Article. No employment applicant shall be discriminated against by any referral system or hiring hall because of the applicant's union membership, or lack thereof.

SECTION 4. MINORITY/ FEMALE REFERRALS

The Unions recognize and acknowledge that Contractor and Subcontractors shall undertake or continue existing EEO programs to ensure that minority group members and women are afforded equal employment opportunities without discrimination because of race, creed, color, national origin, sex (including gender identity or expression), sexual orientation, military status, age, disability, predisposing genetic characteristics, marital status or domestic violence victim status. For these purposes, EEO shall apply in the areas of recruitment, employment, job assignment, promotion, upgrading, demotion, transfer, layoff, or termination and rates of pay or other forms of compensation.

The Contractor shall request each employment agency, labor union, or authorized representative of workers with which it has a collective bargaining or other agreement or understanding, to acknowledge that such employment agency, labor union, or representative will not discriminate on the basis of race, creed, color, national origin, sex (including gender identity or

expression), sexual orientation, military status, age, disability, predisposing genetic characteristics, marital status or domestic violence victim status, and that such union or representative will affirmatively cooperate in the implementation of the Contractor's obligations herein.

SECTION 5. INCENTIVE BASED HIRING PREFERENCES

The Project will target employment of residents located in specific zip codes within the City of Syracuse and Onondaga County, as well as residents of the Onondaga Nation Reserve where median incomes are disproportionately low and unemployment levels are considerably higher than that of the Region. Two incentive tiers will be utilized.

Tier 1 workers shall be workers from the Onondaga Nation territory or from the zip codes 13202, 13203, 13204, 13205, 13207, 13208, 13210, 13224 or 13290, or from zip codes 13206 or 13214 that reside within the City of Syracuse. Residents of 13206 and 13214 will need to confirm they live in the City of Syracuse. Tier 2 workers shall be Tier 1 qualifications who will also face one of the following barriers: being a custodial single parent, receiving federally funded housing assistance, receiving HEAP, SNAP, or Medicaid, lacking a GED or high school diploma, having a criminal conviction, or emancipated from the foster care system.

Local hires need to reside in the target area for at least 6 months before being hired.

The Unions recognize that the maximum incentive for the project is 15% of the overall project hours. If a Local Union is unable to fill any request for Tier 1 or Tier 2 employees within a 48-hour period after such requisition is made by the Contractor (Saturdays, Sundays and holidays excepted) the Contractor may employ qualified applicants from any other available source.

SECTION 6. CROSS AND QUALIFIED REFERRALS

The Local Unions shall not knowingly refer to a Contractor an employee then employed by another Contractor working under this Agreement. The Local Unions will exert their utmost efforts to recruit sufficient numbers of skilled and qualified crafts employees to fulfill the requirements of the Contractor.

Consistent with law and its rules, the Unions will make every reasonable effort to provide a preference in referrals to Contractors for qualified journeymen and apprentices who reside within the geographic boundaries of the NYSDOT.

SECTION 7. UNION DUES

No employee shall be discriminated against because of the employee's union membership or lack thereof. Each Contractor shall deduct from each employee’s wages all uniform dues and working assessments the employee has voluntarily authorized in writing as set forth in the employee’s applicable Schedule A local agreement and remit the same to the applicable local Union.

Each Contractor shall be responsible for and guarantee the payment of all remittance to the appropriate Local Union of the applicable union dues payable by its employees working on the Project. The Local Unions and/or the Central and Northern New York Council shall notify the Contractor, the PC, and NYSDOT's project manager within 48 hours whenever a Contractor or Subcontractor, including the PC, fails to make a required payment and such delinquency remains outstanding after 30 days. Notification must be in writing and may be by email. If written notice of such a delinquency is received by the Contractor within that 48-hour period, the Contractor shall notify the PC and NYSDOT's project manager immediately, but, in any case, within 24 hours. If NYSDOT or the PC receives notice of a delinquency, NYSDOT may and the PC shall withhold from any payment, based upon the work of the delinquent Contractor and/or Subcontractor, the amount of that dues payment delinquency, up to the total amount due until any dispute regarding the delinquency has been resolved. The PC shall have no other obligation with respect to dues remittances owed by any Contractor (or its Subcontractor); but the PC shall continue to be obligated with respect to dues payment based on work done by the PC. If notice of a delinquency is not received by NYSDOT within the required time periods, NYSDOT shall have no basis upon which to withhold, with respect to that delinquency, any part of a payment which is otherwise due.

SECTION 8. CRAFT FOREPERSONS AND GENERAL FOREPERSONS

The selection of craft forepersons and/or general forepersons and the number of forepersons required shall be solely the responsibility of the Contractor. All forepersons shall take orders exclusively from the designated Contractor representatives. All forepersons shall be designated as working forepersons at the request of the Contractor.

ARTICLE 5 - UNION REPRESENTATION

SECTION 1. LOCAL UNION REPRESENTATIVE

Each Local Union signatory to this Agreement shall be entitled to designate in writing (copy to Contractor involved, the PC and the NYSDOT or its designee) two representatives, and/or the Business Manager, who shall be afforded reasonable access to Project Work.

SECTION 2. STEWARDS

Each Local Union shall have the right to designate one working journey person as a Steward and one alternate for each Contractor and shall notify the Contractor and PC of the identity of the designated Steward (and alternate) prior to the assumption of such duties. Stewards shall not exercise supervisory functions and will receive the regular rate of pay for their craft classifications. There will be no non-working Stewards.

In addition to their work as an employee, the Steward shall have the right to receive complaints or grievances and to discuss and assist in their adjustment with the Contractor's appropriate supervisor. Each Steward shall be concerned with the employees of the Steward's Contractor and, if applicable, subcontractors of that Contractor, but not with the employees of any

other Contractor. The Contractor will not discriminate against the Steward in the proper performance of Union duties.

The Stewards shall not have the right to determine when overtime shall be worked or who shall work overtime.

SECTION 3. LAYOFF OF A STEWARD

Contractors agree to notify the appropriate Union 24 hours prior to the layoff of a Steward, except in cases of discipline or discharge for just cause. If a Steward is protected against layoff by a Schedule A provision, such provision shall be recognized to the extent the Steward possesses the necessary qualifications to perform the work required. In any case in which a Steward is discharged or disciplined for just cause, the Local Union involved shall be notified immediately by the Contractor.

ARTICLE 6 - MANAGEMENT'S RIGHTS

SECTION 1. RESERVATION OF RIGHTS

Except as expressly limited by a specific provision of this Agreement, Contractors retain full and exclusive authority for the management of their operations including, but not limited to: the right to direct the work force, including determination as to the number to be hired and the qualifications therefore; the promotion, transfer, layoff of its employees; or the discipline or discharge for just cause of its employees; the assignment and schedule of work; the promulgation of reasonable work rules; and, the requirement, timing and number of employees to be utilized for overtime work. No rules, customs, or practices which limit or restrict productivity or efficiency of the individual (as determined by the Contractor or PC) and/or joint working efforts with other employees shall be permitted or observed.

SECTION 2. MATERIALS. METHODS & EQUIPMENT

There shall be no limitation or restriction under this Agreement upon the Contractors' choice of materials, techniques, methods, technology or design, or, regardless of source or location, upon the use and installation of equipment, machinery, package units, pre-cast, pre- fabricated, pre-finished, or pre-assembled materials, tools, or other labor-saving devices. Contractors may, without restriction under this Agreement, install or use materials, supplies or equipment regardless of their source. Except as provided in Article 3, Section 3, the on-site installation or application of such items shall be performed by the craft having jurisdiction over this work; provided, however, even then it is recognized that other personnel having special qualifications may participate, in a supervisory capacity, in the installation, check-off or testing of specialized or unusual equipment or facilities as designated by the PC or Contractor. There shall be no restrictions as to work which is performed off-site except as may be imposed by law.

ARTICLE 7 - WORK STOPPAGES AND LOCKOUTS

SECTION 1. NO STRIKES-NO LOCK OUT

There shall be no strikes, sympathy strikes, picketing, work stoppages, slowdowns, hand billing, bannering, demonstrations or other disruptive activity at or in proximity to the Project Site or any other site where Project Work is performed for any reason by any Union or employee against the NYSDOT or its designee, PC or any Contractor or other employer while performing any work at that site. There shall be no other Union or concerted or employee activity related to Project Work which disrupts or interferes with the operation of any NYSDOT facility or function wherever located. Failure of any Union or employee to cross any picket line or banner line established by any union, signatory or non-signatory to this Agreement, or the picket, banner or demonstration line of any other organization, at or in proximity to the Project Site or any other site where Project Work is performed or could be adversely affected is a violation of this Article. There shall be no lockout in connection with Project Work by any signatory Contractor. Contractors and Unions shall take all steps necessary to ensure compliance with this Section 1 and to ensure uninterrupted construction, the free flow of traffic in, out and around the Project Site and/or any other Project Work site, and unimpeded operation of the NYSDOT facilities and functions for the duration of this Agreement.

SECTION 2. DISCHARGE FOR VIOLATION

A Contractor may discharge any employee violating Section 1, above, and any such employee will not be eligible thereafter for referral under this Agreement for a period of 100 working days.

SECTION 3. NOTIFICATION

If a Contractor contends that any Union has violated this Article, it will notify the Central and Northern New York Council, with copies of the notification to the Local Union, the Owner or its designee. The Central and Northern New York Council shall instruct, order and otherwise use their best efforts to cause the employees, and/or the Local Unions to immediately cease and desist from any violation of this Article. If the Central and Northern New York Council complies with these obligations, it shall not be liable for the unauthorized acts of a Local Union or its members.

SECTION 4. EXPEDITED ARBITRATION

Any Contractor or Union alleging a violation of Section 1 of this Article may utilize the expedited procedure set forth below (in lieu of, or in addition to, any actions at law or equity) that may be brought.

A party invoking this procedure shall notify Robert Rabin, Jeffery Selchick, or Thomas Rinaldo who shall alternate as Arbitrator under this expedited arbitration procedure. If the Arbitrator next on the list is not available to hear the matter within 48 hours of notice, the next Arbitrator on the list shall be called. If for any reason none of the foregoing are available, the PC and Council shall attempt mutually to select an arbitrator, but if they are unable to do so, they shall request the American Arbitration Association to provide them with a list of arbitrators from which

the Arbitrator shall be selected. Copies of such notification will be simultaneously sent to the alleged violator and, if a Local Union is alleged to be in violation, its International affiliate, the Central and Northern New York Council, and the PC and the NYSDOT or its designee.

The Arbitrator shall thereupon, after notice as to time and place to the Contractor, the Local Union involved, the Central and Northern New York Council, the PC, and the NYSDOT or its designee, hold a hearing within 48 hours of receipt (excluding Sundays and holidays) of the notice invoking the procedure if it is contended that the violation still exists. The hearing will not, however, be scheduled for less than 24 hours (excluding Sundays and holidays) after the notice required by Section 3, above. Any hearing shall be held in Syracuse, New York unless the parties and the NYSDOT or its designee mutually agree otherwise.

All notices pursuant to this Article may be by telephone, telegraph, hand delivery, or email, confirmed by overnight delivery, to the Arbitrator, Contractor, PC, NYSDOT or its designee, Central and Northern New York Council and Union involved. The hearing may be held on any day including Saturdays or Sundays. The hearing shall be completed in one session, which shall not exceed 8 hours duration (no more than 4 hours being allowed to either side to present their case, and conduct their cross examination) unless otherwise agreed. A failure of any Union or Contractor to attend the hearing shall not delay the hearing of evidence by those present or the issuance of an award by the Arbitrator.

The sole issue at the hearing shall be whether a violation of Section 1, above, occurred. If a violation is found to have occurred, the Arbitrator shall issue a Cease and Desist Award restraining such violation and serve copies on the Contractor, PC, NYSDOT or its designee, Central and Northern New York Council and Union involved. The Arbitrator shall have no authority to consider any matter in justification, explanation or mitigation of such violation or to award damages, which issue is reserved solely for court proceedings, if any. The Award shall be issued in writing within 3 hours after the close of the hearing and may be issued without an Opinion. If any involved party desires an Opinion, one shall be issued within 15 calendar days, but its issuance shall not delay compliance with, or enforcement of, the Award.

An Award issued under this procedure may be enforced by any court of competent jurisdiction upon the filing of this Agreement together with the Award. Notice of the filing of such enforcement proceedings shall be given to the Union and Contractor involved and to the PC and NYSDOT or its designee. In any court proceeding to obtain a temporary or preliminary order enforcing the arbitrator's Award as issued under this expedited procedure, the involved Union and Contractor waive their right to a hearing and agree that such proceedings may be ex parte, provided notice is given to opposing counsel. Such agreement does not waive any party's right to participate in a hearing for a final court order of enforcement or in any contempt proceeding.

Any rights created by statute or law governing arbitration proceedings which are inconsistent with the procedure set forth in this Article, or which interfere with compliance thereto, are hereby waived by the Contractors and Unions to whom they accrue.

The fees and expenses of the Arbitrator shall be equally divided between the involved Contractor and Union.

SECTION 5. ARBITRATION OF DISCHARGES FOR VIOLATION

Procedures contained in Article 9 shall not be applicable to any alleged violation of this Article, with the single exception that an employee discharged for violation of Section 1, above, may have recourse to the procedures of Article 9 to determine only if the employee did, in fact, violate the provisions of Section 1 of this Article; ·but not for the purpose of modifying the discipline imposed where a violation is found to have occurred.

ARTICLE 8 - LABOR MANAGEMENT COMMITTEE

SECTION 1. SUBJECTS

The Project Labor Management Committee will meet on a regular basis to: 1) promote harmonious relations among the Contractors and Unions; 2) enhance safety awareness, cost effectiveness and productivity of construction operations; 3) protect the public interest; 4) discuss matters relating to staffing and scheduling with safety and productivity as considerations; and 5) review Affirmative Action and equal employment opportunity matters pertaining to the Project Work. The PC shall take notes of all meetings and distribute them to the Committee.

SECTION 2. COMPOSITION

The Committee shall be comprised of three designees of the Central and Northern New York Council and three designees of the PC (at least one of which will come from the PC), and representatives of the Local Unions and Contractors involved in the issues being discussed. The Committee may elect its own chair. The Committee may conduct business through mutually agreed sub-committees.

ARTICLE 9 - GRIEVANCE & ARBITRATION PROCEDURE

SECTION 1. CLOSE COOPERATION

This Agreement is intended to provide close cooperation between management and labor. Each of the Unions will assign a representative to this Project for the purpose of completing the construction of the Project economically, efficiently, continuously, and without interruptions, delays, or work stoppages.

SECTION 2. IMPORTANCE TO ALL PARTIES

The Contractors, Unions, and the employees, collectively and individually, realize the importance to all parties to maintain continuous and uninterrupted performance of the work of the Project, and agree to resolve disputes in accordance with the grievance-arbitration provisions set forth in this Article.

SECTION 3. PROCEDURE

Any question or dispute arising out of and during the term of this Project Agreement (other than trade jurisdictional disputes) shall be considered a grievance and subject to resolution under the following procedures:

Step 1. (a) When any employee subject to the provisions of this Agreement feels he or she is aggrieved by a violation of this Agreement, he or she, through his or her local union business representative or job steward, shall, within five (5) working days after the occurrence of the violation, give notice to the work-site representative of the involved Contractor stating the provision(s) alleged to have been violated. The business representative of the local union or the job steward and the work-site representative of the involved Contractor and the PC (if it so chooses) shall meet and endeavor to adjust the matter within three (3) working days after timely notice has been given. The Contractor shall keep the meeting minutes and shall respond to the Union representative 'in writing (copying the PC) at the conclusion of the meeting but not later than twenty-four (24) hours thereafter. If they fail to resolve the matter within the prescribed period, the grieving party may, within forty-eight (48) hours thereafter, pursue Step 2 of the Grievance Procedure, provided the grievance is reduced to writing, setting forth the Relevant information concerning the alleged grievance, including a short description thereof, the date on which the grievance occurred, and the provision(s) of the Agreement alleged to have been violated.

(b) Should the Local Union(s) or any Contractor (including the PC) have a dispute with the other party and, if after conferring, a settlement is not reached within three (3) working days, the dispute may be reduced to writing and proceed to Step 2 in the same manner as outlined herein for the adjustment of an employee complaint.

Step 2. The International Union Representative and the involved Contractor shall meet within' seven (7) working days of the referral of a dispute to this second step to arrive at a satisfactory settlement thereof. Meeting minutes shall be kept by the Contractor. If the parties fail to reach an agreement, the dispute may be appealed in writing in accordance with the provisions of Step 3 within seven (7) calendar days thereafter.

Step 3. (a) If the grievance has been submitted but not adjusted under Step 2, either party may request in writing, within seven (7) calendar days thereafter, that the grievance be submitted to an Arbitrator mutually agreed upon by them. If the parties are unable to agree upon an arbitrator, they shall request the American Arbitration Association to provide them with a list of arbitrators from which the Arbitrator shall be selected. The rules of the American Arbitration Association shall govern the conduct of the arbitration hearing. The decision of the Arbitrator shall be final and binding on all parties. The fee and expenses of such Arbitration shall be borne equally by the Contractor and the involved Local Union(s). Any hearing will be held in Syracuse, New York unless the parties, including the NYSDOT or its designee, mutually agree otherwise.

(b) Failure of the grieving party to adhere to the time limits established herein shall render the grievance null and void. The time limits established herein may be extended only by written consent of the parties involved at the particular step where the extension is agreed upon. The Arbitrator shall have the authority to make decisions only on issues presented to him or her, and he or she shall not have authority to change, amend, add to or detract from any of the provisions of this Agreement.

(c) The PC, NYSDOT or its designee shall be notified of all actions at Steps 2 and 3 and shall, upon their request, be permitted to participate in all proceedings at these steps.

SECTION 4. LIMITATION AS TO RETROACTIVITY

No arbitration decision or award may provide retroactivity of any kind prior to the date of service of the grievance under Step 1 or 28 days prior to the date of service of the written grievance on the PC and the involved Contractor or Local Union under Step 2, whichever period is shorter.

ARTICLE 10 - JURISDICTIONAL DISPUTES

SECTION 1. ASSIGNMENT

The assignment of work will be solely the responsibility of the Contractor performing the work involved; and such work assignments will be in accordance with the National Plan for the Settlement of Jurisdictional Disputes in the Construction Industry (the “National Plan") or any successor Plan approved by the Building & Construction Trades Department, AFL-CIO.

SECTION 2. PROCEDURE FOR SETTLEMENT OF DISPUTES

All jurisdictional disputes involving Project Work between or among parties to this Agreement, shall be settled and adjusted according to the present Plan established by the Building and Construction Trades Department or any other plan or method of procedure that may be adopted in the future by the Building and Construction Trades Department. Decisions rendered shall be final, binding and conclusive on the Contractors and Unions parties to this Agreement with respect to Project Work.

SECTION 3. NO INTERFERENCE OF WORK

All Jurisdictional disputes shall be resolved without the occurrence of any strike, work stoppage, or slow-down of any nature, and the Contractor's assignment shall be adhered to until the dispute is resolved. Individuals violating this section shall be subject to immediate discharge.

SECTION 4. PRE-JOB CONFERENCE

Each Contractor or subcontractor of any tier will conduct a pre-job conference with the Central and Northern New York Council prior to commencing work. The PC and the NYSDOT or its designee will be advised in advance of all such conferences and may participate if they wish.

In conjunction with the pre-job conference, each Contractor shall complete the attached Pre-Job Questionnaire form (Schedule C) to identify all Subcontractors and indicating what trades will be used to perform the Project work “Proposed Trade Assignments”. This form shall be submitted to the Central and Northern New York Council at least fourteen (14) days in advance of the commencement of work. If any Local Union(s) objects or disagrees to the Proposed Trade Assignment of either the Prime Contractor, Contractor or Subcontractor, the Local Union will state

its objection and there shall be a good faith discussion among the Contractor or Subcontractor and the objecting Local Union and other affected Unions to resolve objections to the trade assignment. If no resolution is reached, any involved Local Union may submit their position in writing together with support documentation within seven (7) calendar days to the Prime Contractor, Contractor or Subcontractor with a copy to all affected Local Unions. The Prime Contractor, Contractor or Subcontractor will review all submitted supporting documentation regarding the Proposed Trade Assignments and will submit to the Contractor, the Central and Northern New York Council, and all affected Local Unions a "Final Trade Assignment" letter within fourteen (14) days calendar days of the pre-job meeting at which the Proposed Trade Assignments were made. Any unresolved disputes concerning trade assignments shall be handled in accordance with Section 10.1, 10.2, and 10.3 of this Article in accordance with the present Plan established by the Building and Construction Trades Department.

ARTICLE 11 - WAGES AND BENEFITS

SECTION 1. CLASSIFICATION AND BASE HOURLY RATE

Subject to the provisions of this Agreement, all employees covered by this Agreement shall be classified in accordance with the work performed and paid the base, straight time hourly wage rates applicable for those classifications as required by the applicable New York State Labor Law Section 220 prevailing wage determination.

SECTION 2. EMPLOYEE BENEFITS/SUPPLEMENTS

A. Except as may be modified by this Agreement (to the extent permitted by law), the Contractors agree to pay employee benefits/supplements on behalf of all of their employees covered by this Agreement in the amounts required by the applicable Section 220 schedule in effect.

Except as provided below and in 2B, the Contractors agree that such payments shall be made to those established jointly trusteed employee benefit funds designated in Schedule A, and in the amounts so designated, to the extent such amounts are required by Section 220 and payment to a Schedule A fund satisfies that obligation. Bona fide jointly trusteed fringe benefit plans established or negotiated through collective bargaining during the life of this Agreement may be added if they similarly fall within Section 220. Contractors shall not be required to contribute to non-Section 220 benefits, trusts or plans or beyond Section 220 required amounts.

B. Notwithstanding Article 11 Section 2A, Contractors who designate employees pursuant to Article 4 Section 2B, may satisfy the above benefit obligation with respect to those employees by: (i) providing those employees with coverage under their own bona fide private benefit plans, provided such plans satisfy the requirements of the Internal Revenue Code, (ii) by electing to pay into the applicable jointly held trustee funds designated on Schedule A on their behalf, or (iii) by including the full amount of such benefit in the employee's wages. When the benefit payments are paid into private plans, the payments to be made on behalf of those employees must equal the total supplement amount set forth at the Wage and Benefit sheet referred in Section 1 of this Article and must be consistent with the requirements of Section 220, and any shortfall must be included in the employee's wages.

The option for a private plan equivalent supplement or payment of benefits in employee wages shall not apply to contributions into Joint Apprentice Training Committee (JATC) or similar apprentice funds designated on Schedule A if the Contractor does not have an apprentice training program approved by the Department of Labor. Upon request by the Council, any contractor providing coverage to Article 4, Section 2B employees under private benefit plans will provide the Council with documentation of benefit payments made to individual employees during the term of their employment on the Project.

C. Contractors who exercise the option under Article 11 Section 2B of this Article to pay into their own private benefit plans or pay cash in the envelop rather than the applicable jointly trusteed funds designated in Schedule A shall be responsible for and guarantee employee benefit/supplement payments and shall indemnify and hold harmless the jointly trusteed funds designated in Schedule A against any and all benefit/supplement claims by its employees. Employees who exercise this option shall sign a waiver included as Schedule E. Contractors shall not be allowed to exercise the above-referenced option under Article 11, Section 2.B, unless and until a Schedule E waiver is executed by each employee exercising the option and such waiver is delivered to the Project Manager and the Council.

D. Contractors who contribute to jointly trusteed funds under this Section agree to be bound by the written terms of the legally-established jointly trusteed Trust Agreements specifying the detailed basis on which payments are to be paid into, and benefits paid out of, such Trust Funds but only with regard to Project Work and only for those employees to whom this Agreement requires such benefit payments. Notwithstanding the foregoing, a Contractor's liability shall be at all times limited to the amount of contributions required to be made to the Trust Funds.

E. Each Contractor shall be responsible for and guarantee the payment of all required fringe benefits for Project Work. The Local Unions and/or the Council shall notify the PC, the NYSDOT and the Contractor or Subcontractor within 48 hours whenever a Contractor or Subcontractor fails to make a required benefit payment and such delinquency remains outstanding after 30 days. Notification must be in writing and may be by email. If the PC and NYSDOT receives notice of a delinquency by Contractor or Subcontractor, the NYSDOT may place the funds equivalent to the delinquency into escrow or otherwise withheld from any funds due the Contractor or Subcontractor, up to the total amount due, until the delinquency is resolved. The NYSDOT shall have no other obligation with respect to contributions owed by any Contractor (or its Subcontractor), but the Contractor shall continue to be obligated with respect to contributions based on work done by the Contractor. If notice of a delinquency is not received by the NYSDOT or the PC within the required time periods, the NYSDOT shall have no basis upon which to withhold, with respect to that delinquency, any part of a payment which is otherwise due.

Any payment otherwise required under any CBA with the exception of those expressly required under Section 220 separate and apart from wages and fringe benefits shall not be required.

ARTICLE 12 - HOURS OF WORK, PREMIUM PAYMENTS, SHIFTS AND HOLIDAYS

SECTION 1. WORK WEEK AND WORK DAY

A. The standard work week shall consist of 40 hours of work at straight time rates per one of the following schedules:

(1) Five-Day Work Week: Monday - Friday; 5 days, 8 hours plus 1/2 hour unpaid lunch period each day.

(2) Four-Day Work Week: Monday - Thursday, 4 days, l 0 hours plus l /2 hour unpaid lunch period each day.

B. The Day Shift shall normally commence between the hours of 6:00 am. and 9:00 a.m., although there may be times when NYSDOT or its designee may require the day shift to start as early as 5:00 a.m. Starting and quitting times shall occur at the site as designated by the Contractor.

C. Scheduling - The Contractor shall have the option of scheduling either a five-day or four-day work week and work day hours consistent with Project Work requirements and scheduling. When conditions beyond the control of the Contractor, such as weather, power failure, fire or natural disaster, prevent the performance of Project Work on a regularly scheduled work day, the Contractor may schedule Friday (where on 4, 10's) or Saturday (where on 5, 8's) during that calendar week in which a workday was lost, at straight time pay, providing the employees involved have not otherwise worked more than 40 hours during that work week. In the event the employees involved have worked more than 40 hours during that work week they will receive time and one-half pay for the hours in excess of 40. An individual employee shall not be penalized for inability to work a Friday or Saturday make-up day. It shall be the employee’s responsibility to notify the Employer and Union involved that they will not be working that day.

D. Notice - Contractors shall provide not less than 5 working days prior notice to the Local Union involved as to the work week and work hour schedules (including any changes in the work schedule) to be worked or such lesser notice as may be mutually agreed upon.

SECTION 2. OVERTIME/PREMIUM PAY

Unless provided differently in this Agreement, overtime and/or premium pay for hours outside of the standard work week and work day, described in Section 1 above, shall be paid in accordance with the applicable Schedule A (or where there is no applicable Schedule A then as required by the wage and supplement schedule under Labor Law Section 220), except that overtime/premium pay shall not exceed 1 an 1/2 times the base rate for any hours worked Monday through Saturday. There will be no restriction upon the Contractor's scheduling of overtime or the non-discriminatory designation of employees who shall be worked. "There shall be no pyramiding of overtime/premium pay under any circumstances. The Contractor shall have the right to schedule work so as to minimize overtime. Holiday pay, if any, will be paid in accordance with Article 12, Section 4 below.

SECTION 3. SHIFTS

A. Flexible Schedules-Scheduling of shift work shall remain flexible in order to meet Project schedules and existing conditions. It is not necessary to work a day shift in order to schedule a second or third shift. Any combination of shifts may be used (including only a second shift or only a third shift.) Shifts must have prior approval of the NYSDOT or its designee and must be scheduled with not less than five work days notice to the Local Union.

B. Second/or Third Shifts - The second shift will normally start between 4:30 p.m. and 7:30 p.m. and the third shift will normally start after 7:30 p.m. and in each case shall be paid the lesser of a shift differential of 5% and 10%, respectively, or the differential required by Section 220. There shall be no reduction in hours worked on a second and/or third shift, except that when 3 shifts are working together, the length of one or more shifts can be reduced to accommodate a 24 hour day and only actual hours worked will be paid.

C. Flexible Starting Times - The foregoing shift starting times can be adjusted by the Contractor, with the NYSDOT or its designee's approval, as necessary to fulfill Project requirements, subject to the notice requirements of paragraph A.

Four Tens - When working a four-day work week, the standard work day shall consist of 10 hours work for 10 hours of pay at the straight time rate exclusive of an unpaid 1/2 hour meal period and regardless of the starting time. Should a work assignment extend for more than ten hours, hours 11, 12, and 13 shall be paid at 1 and ½ time base. Hour 14 and thereafter shall be paid at 2 times base.

Night Shift – There shall be no wage rate premium for Night Shift work.

SECTION 4. HOLIDAYS

A. Schedule- There shall be 8 recognized holidays on the Project:

New Year’s Day
Memorial Day
Fourth of July
Labor Day
Thanksgiving Day
Christmas Day
Martin Luther King Day
Juneteenth

All said holidays shall be observed on the dates designated by New York State Law. In the absence of such designation, they shall be observed on the calendar date except those holidays which occur on Saturday shall be observed on the preceding Friday and those which occur on Sunday shall be observed on the following Monday.

B. Payment – There shall be no payment for holidays if not worked. Any premium pay for work performed on such a recognized holiday shall be in accordance with the applicable Schedule A.

C. Exclusivity - No holidays other than those listed in Section 4-A above shall be recognized or observed.

SECTION 5. REPORTING PAY

A. Employees who report to the work location pursuant to a regular schedule and who are not provided with work or whose work is terminated early by a Contractor, for whatever reason, shall receive the greater of an allowance for travel costs equal to one hour's pay or pay for any hours actually worked, but not both. (Such payment is in lieu of any reporting or similar pay provided for in an applicable Schedule A.) The allowance for travel costs is not to be considered as wages nor is it to be included in the calculation of any benefits.

B. When an employee who has completed their scheduled shift and left the Project site is "called out" to perform special work of a casual, incidental or irregular nature, the employee shall receive pay for actual hours worked with a minimum guarantee, as may be required by the applicable Schedule A, at the employee's straight time rate, unless overtime rates otherwise apply.

C. When an employee leaves the job or work location of their own volition or is discharged for cause or is not working as a result of the Contractor's invocation of Section 7 below, they shall be paid only for the actual time worked.

D. Except as specifically set forth in this Article there shall be no premiums, bonuses, hazardous duty (unless required under Section 220), high time or other special payments of any kind.

E. There shall be no pay for time not actually worked except as specifically set forth in this Article.

SECTION 6. PAYMENT OF WAGES

A. Payday - Payment shall be made by check, drawn on a New York bank with branches located within commuting distance of the job site. Paychecks shall be issued by the Contractor at the job site by 10 a.m, on Thursdays. A Contractor who fails to make payments on the designated day shall be subject to a late fee of $50.00/day per employee until payment is issued. In the event that the following Friday is a bank holiday, paychecks shall be issued on Wednesday of that week. Not more than 3 days' wages shall be held back in any pay period. Paycheck stubs shall contain the name and business address of the Contractor, together with an itemization of deductions from gross wages and the prevailing rate of wage for the employee's particular job classification, as required by Section 220 of the New York State Labor Law.

B. Termination- Employees who are laid off or discharged for cause shall be paid in full for that which is due them at the time of termination. The Contractor shall also provide the employee with a written statement setting forth the date of lay off or discharge.

SECTION 7. EMERGENCY WORK SUSPENSION

A Contractor may, if considered necessary for the protection of life, property, and/or safety of employees or others, suspend all or a portion of Project Work. In such instances, employees will be paid for actual time worked; provided, however, that when a Contractor requests that employees remain at the job site available for work, employees will be paid for "stand-by" time at their hourly rate of pay.

SECTION 8. INJURY/DISABILITY

An employee who, after commencing work, suffers a work-related injury or disability while performing work duties, shall receive no less than 8 hours wages for that day. Further, the employee shall be rehired at such time. as able to return to duties provided there is still Project Work available for which the employee is qualified and able to perform.

SECTION 9. TIME KEEPING

A Contractor may utilize brassing or other systems to check employees in and out. Each employee must check in and out. The Contractor will provide adequate facilities for checking in and out in an expeditious manner.

SECTION 10. MEAL PERIOD

A Contractor shall schedule an unpaid period of not more than 1/2 hour duration at the work location between the 3rd and 5th hour of the scheduled shift. A Contractor may, for efficiency of operation, establish a schedule which coordinates the meal periods of two or more crafts. If an employee is required to work through the meal period, the employee shall be compensated in a manner established in the applicable Schedule A.

SECTION 11. BREAK PERIODS

There will be no rest periods, organized coffee breaks or other non-working time established during working hours. Individual coffee containers will be permitted at the employee's work location.

ARTICLE 13 – APPRENTICES

SECTION 1. RATIOS

Recognizing the need to maintain continuing supportive programs designed to develop adequate numbers of competent workers in the construction industry and to provide craft entry opportunities for minorities, women and economically disadvantaged non-minority males,

Contractors will employ apprentices in their respective crafts to perform such work as is within their capabilities and which is customarily performed by the craft in which they are indentured. Contractors may utilize apprentices registered in a NYS certified program (and such other appropriate classifications as are contained in the applicable Schedule A) in a ratio not less than 33% of the work force by craft (without regard to whether a lesser ratio is set forth in Schedule A), unless the applicable Schedule A provides for a higher percentage, in which case that will apply. Apprentices and such other classifications as are appropriate shall be employed in a manner consistent with the provisions of the appropriate Schedule A. The Local Unions shall maintain sufficient apprenticeship slots to meet Project Work needs.

SECTION 2. DEPARTMENT OF LABOR

To assist the Contractors in attaining a maximum effort in connection with Project Work, the Unions agree to work in close cooperation with, and accept monitoring by, the New York State Department of Labor to ensure that individuals qualified under ARTICLE 4 SECTION 5. INCENTIVE BASED HIRING PREFERENCES are afforded every opportunity to participate in apprenticeship programs which result in the placement of apprentices on this Project. To further ensure that this Contractor effort is attained, up to 50% of the apprentices placed on this Project may be first year, apprentices hired through the INCENTIVE BASED HIRING PREFERENCES Section of this agreement. The Local Unions will cooperate with Contractor requests for such referrals to meet this Contractor effort.

ARTICLE 14 - SUBCONTRACTING

No Contractor or subcontractor will subcontract any Project Work except to a person, firm or corporation who is or agrees to become party to this Agreement. Any Contractor or subcontractor working on the Project shall, as a condition to working on said Project, sign a Letter of Assent and perform all Project Work under the terms of this Agreement, including Article 4 which requires that all workers used for Project Work be represented by the Local Unions signatory to this agreement. Project Work may be contracted/subcontracted to any Contractor or subcontractor who is or agrees to become party to this Agreement.

ARTICLE 15 - DIVERSITY

The Unions and Contractors recognize the importance of fostering participation and growth of Disadvantaged Business Enterprises (DBEs) and agree that they will work cooperatively with the NYSDOT in support of its diversity efforts and its goals for DBEs. This cooperation includes working with NYSDOT to participate in informational recruitment seminars and other such activities as scheduled by NYSDOT and the PC as well as active individual Contractor outreach to encourage participation.

ARTICLE 16 - HELMETS TO HARDHATS

SECTION 1.

The Contractors and the Unions also recognize a desire to facilitate the entry into the Building and Construction Trades of veterans who are interested in careers in the building and construction industry. The Contractors and Unions agree to utilize the services of the Center for Military Recruitment, Assessment and Veterans Employment (hereinafter "Center") and the Center's "Helmets to Hardhats" program to serve its a resource for preliminary orientation, assessment of construction aptitude, referral to apprenticeship programs or hiring halls, counseling and mentoring, support network, employment opportunities and other needs as identified by the parties.

SECTION 2.

The Contractors and the Unions agree to coordinate with the Center to create and maintain an integrated database of veterans interested in working on this Project and of apprenticeship and employment opportunities for this project. To the extent permitted by law, the Unions will give credit to such veterans for bona fide, provable past experience.

ARTICLE 17 - SAFETY PROTECTION OF PERSON AND PROPERTY

SECTION 1. SAFETY AND SECURITY REQUIREMENTS

Each Contractor will ensure that applicable OSHA, NYSDOT, and PC mandated Project Safety Program requirements, are at all times maintained· and the employees and Unions agree to cooperate fully with these efforts. Employees must perform their work at all times in a safe manner, subject to required security protocols, and protect themselves and the property of the Contractor and NYSDOT from injury or harm. Failure to do so may be grounds for discipline, including discharge.

SECTION 2. CONTRACTOR RULES

Employees covered by this Agreement shall at all times also be bound by the reasonable safety, security, and visitor rules as established by the PC, Contractors, and/or NYSDOT. Such rules will be published and posted in conspicuous places throughout the work site.

SECTION 3. INSPECTIONS

The Owner or its designee, Contractors and PC retain the right to inspect incoming shipments of equipment, apparatus, machinery and construction materials of every kind.

ARTICLE 18 - NO DISCRIMINATION

SECTION 1. COOPERATIVE EFFORTS

The Contractors and Unions agree that they will not discriminate against any employee or applicant for employment because of race, color, religion, sex, national origin, marital status, age, union or non-union status, or any other status protected by law, in any manner prohibited by law or regulation. It is recognized that special procedures may be established by mutual agreement among

Contractors and Local Unions and the New York State Department of Labor for the training and employment of persons who have not previously qualified to be employed on construction projects of the type covered by this Agreement. The parties to this Agreement will assist in such programs and agree to use their best efforts to ensure that the goals for female and minority employment are met on this Project.

SECTION 2. LANGUAGE OF AGREEMENT

The use of the masculine or feminine gender in this Agreement shall be construed as including both genders.

ARTICLE 19 - GENERAL TERMS

SECTION 1. PROJECT RULES

The PC and/or the Contractors shall establish from time to time such reasonable work rules (which may include pre-hire and post-hire drug testing rules) as are appropriate for the good order of the Project Work. These rules will be explained at the pre-job conference (if then existing) and posted at the site and may be amended thereafter as necessary. Failure of an employee to observe these rules and regulations shall be grounds for discipline, including discharge. The fact that no order was posted prohibiting a certain type of misconduct shall not be a defense to an employee disciplined or discharged for such misconduct when the action taken is for cause.

SECTION 2. TOOLS OF THE TRADE

The welding/cutting torch and chain fall are tools of the trade having jurisdiction over the work performed. Employees using these tools shall perform any of the work of the trade. There shall be no restrictions on the emergency use of any tools or equipment by any qualified employee or on the use of any tools or equipment for. the performance of work within the employee's jurisdiction.

SECTION 3. SUPERVISION

Employees shall work under the supervision of the craft foreperson or general foreperson.

SECTION 4. TRAVEL ALLOWANCES

There shall be no payments for travel expenses, travel time, parking, subsistence allowance or other such reimbursements or special pay except as expressly set forth in this Agreement.

SECTION 5. FULL WORK DAY

Employees shall be at their work area at the starting time established by the Contractor. The signatories reaffirm their policy of a fair day's work for a fair day's wage.

ARTICLE 20 - COOPERATION

To the extent permitted by law, the parties intend for the provisions of this Agreement to control in the event of a conflict between this Agreement and any provision of New York State Labor Law. Towards that end, the PC, Contractors and the Unions will cooperate in seeking any NYS Department of Labor approvals that may be required for implementation of any terms of this Agreement.

ARTICLE 21 - SAVINGS AND SEPARABILITY

SECTION 1. THIS AGREEMENT

In the event that the application of any provision of this Agreement is enjoined, on either on an interlocutory or permanent basis, or otherwise found in violation of law, the provision involved shall be rendered, temporarily or permanently, null and void. In such event, the remainder of the Agreement shall remain in full force and effect, to the extent allowed by law, for contracts or work already bid and/or awarded and still in construction provided the Contractor then voluntarily accepts the Agreement. The parties to this Agreement will enter into negotiations for a substitute provision in conformity with the law and the intent of the parties for contracts to be let in the future.

SECTION 2. THE BID SPECIFICATIONS

. In the event that the NYSDOT's bid specifications, or any other action taken by the NYSDOT or the PC, requiring that a successful bidder or other recipient of Project Worker become signatory to this Agreement is enjoined, on either an interlocutory or permanent basis, or otherwise found in violation of law, then such specification or other action, and with it Article 2, Section 6, shall be rendered, temporarily or permanently, null and void. In such event, this Agreement shall remain in full force and effect to the extent allowed by law for contracts or work already bid and/or awarded and still in construction provided the Contractor then voluntarily accepts the Agreement. The parties will enter into negotiations as to modifications to the Agreement to reflect the court action taken and the intent of the parties for contracts to be let in the future.

SECTION 3. NON-LIABILITY

In the event of an occurrence referenced in Section 1 or Section 2 of this Article, neither the NYSDOT, the Owner's Representative, any Contractor, nor any signatory Union shall be liable under this Agreement or otherwise, directly or indirectly, for any action taken, or not taken, in order to comply with any court order, injunction or determination, Project bid specifications will be issued in conformance with court orders then in effect and no retroactive payments or other retroactive action will be required if the original court determination is reversed. Contracts shall be awarded on the basis of the specification issued unless those specifications have been enjoined or otherwise ruled unlawful, in which case the award, if any, shall be based on the specification as modified to meet any applicable court order.

SECTION 4. NON-WAIVER

Nothing in this Article shall be construed as waiving the prohibitions of Article 7 as to bound Contractors and signatory Unions.

ARTICLE 22 - FUTURE CHANGES IN SCHEDULE A AREA CONTRACTS

SECTION 1. CHANGES TO AREA CONTRACTS

A. To the extent applicable to the Project Work, Schedule A to this Agreement shall continue in effect until the Contractor and/or Union parties to the Area Collective Bargaining Agreements which are the basis for Schedule A notify the PC in writing of the mutually agreed upon changes in provisions of such agreements which are applicable to the Project Work, and their effective dates. Such changes, including changes in wage and benefit/supplement rates, shall only be effective to the extent consistent with this Agreement.

B. It is agreed that any provisions negotiated into Schedule A will not apply to work on this Project if such provisions are less favorable to Project Work than ·those uniformly required of Contractors for construction work, other than Project Work, normally covered by those agreements; nor shall any provision be recognized or applied to Project Work if it may be construed to apply exclusively, or predominantly, to work covered by this Agreement.

C. Any disagreement between signatories to this Agreement over the incorporation into Schedule A of provisions agreed upon in the renegotiation of Area Collective Bargaining Agreements shall be resolved in accordance with the procedure set forth in Article 9 of this Agreement.

SECTION 2. LABOR DISPUTES DURING AREA CONTRACT NEGOTIATIONS

The Unions agree that there will be no strikes, work stoppages, sympathy actions, picketing, slowdowns or other disruptive activity or other violations of Article 7 affecting Project Work by any Local Union involved in the renegotiation of Area Local Collective Bargaining Agreements nor shall there be any lock-out with respect to Project Work affecting a Local Union during the course of such renegotiations.

ARTICLE 23 - WORKERS' COMPENSATION ADR

The parties agree that the PC may implement a Workers' Compensation Alternative Dispute Resolution program which is consistent with Section 25 (2-C) of the New York Workers' Compensation Law. The final terms of the program shall be determined by the PC, after consultation with the Union. If the PC is not satisfied with the cost savings to be generated by such a program, it may, in its discretion, decline to implement, or at any time after implementation decline to continue, that program.

IN WITNESS WHEREOF the parties have caused this Agreement to be executed and effective as of the _____ day of _____, 2023.

FOR PRIME CONTRACTOR

BY _____
(Name/Title)

FOR THE BUILDING & CONSTRUCTION TRADES
CENTRAL AND NORTHERN NEW YORK BUILDING CONSTRUCTION TRADES COUNCIL

BY: _____
(Name/Title)

FOR THE LOCAL UNIONS

INTERNATIONAL ASSOCIATION OF HEAT AND FROST INSULATORS AND ALLIED WORKERS, LOCAL NO. 30

BY: _____
(Name/Title)

BOILERMAKERS' UNION LOCAL NO. 175

BY: _____
(Name/Title)

BRICKLAYERS AND ALLIED CRAFT LOCAL NO. 2

BY: _____
(Name/Title)

INTERNATIONAL BROTHERHOOD OF ELECTRICAL WORKERS UNION LOCAL NO. 43

BY: _____
(Name/Title)

INTERNATIONAL ASSOCIATION OF BRIDGE, STRUCTURAL AND ORNAMENTAL IRON WORKERS LOCAL NO. 60

BY: _____
(Name/Title)

CONSTRUCTION AND GENERAL LABORERS' LOCAL NO.633

BY: _____

(Name/Title)

INTERNATIONAL UNION OF OPERATING ENGINEERS LOCAL NO. 158

BY: _____
(Name/Title)

INTERNATIONAL UNION OF OPERATING ENGINEERS TECHNICAL ENGINEERING DIVISION LOCAL 158

BY: _____
(Name/Title)

UNITED ASSOCIATION OF JOURNEYMEN AND APPRENTICES
OF TIIE PLUMBING AND PIPEFITTING INDUSTRY LOCAL 81

BY: _____
(Name/Title)

UNITED UNION OF ROOFERS, WATERPROOFERS AND ALLIED WORKERS LOCAL NO. 195

BY: _____
(Name/Title)

SHEET METAL WORKERS' INTERNATIONAL ASSOCIATION LOCALN0.58

BY: _____
(Name/Title)

INTERNATIONAL BROTHERHOOD OF TEAMSTERS, CHAUFFEURS, WAREHOUSEMEN AND HELPERS LOCAL NO. 317

BY: _____
(Name/Title)

INTERNATIONAL UNION OF ELEVATOR CONSTRUCTORS, LOCAL NO. 62

BY: _____
(Name/Title)

DISTRICT COUNCIL NO. 4 GLAZIERS LOCAL NO. 677

BY: _____
(Name/Title)

DISTRICT COUNCIL NO. 4 PAINTERS LOCAL NO. 31

BY: _____
(Name/Title)

ROAD SPRINKLER FITTERS LOCAL NO. 669

BY: _____
(Name/Title)

MILLWRIGHTS LOCAL UNION 1163

BY: _____
(Name/Title)

NORTH ATLANTIC STATES REGIONAL COUNCIL OF CARPENTERS, LOCAL 277

BY _____
(Name/Title)

OPERATIVE PLASTERERS & CEMENT MASONS LOCAL NO. 111

BY: _____
(Name/Title)

PLASTERERS & CEMENT MASONS LOCAL NO. 9

BY: _____
(Name/Title)

SCHEDULE A – LOCAL COLLECTIVE BARGAINING AGREEMENTS

ARTICLES OF AGREEMENT between the INTERNATIONAL BROTHERHOOD OF BOILERMAKERS, IRON SHIP BUILDERS, BLACKSMITHS, FORGERS & HELPERS, AFL-CIO and THE FIRMS WHOSE SIGNATURES ARE AFFIXED HERETO January 1, 2022 – December 31, 2024

BRICKLAYERS & ALLIED CRAFTWORKERS BUILDING AGREEMENT between EASTERN CONTRACTORS ASSOCIATION, INC. CONSTRUCTION EMPLOYERS ASSOCIATION OF CNY, INC. and BRICKLAYERS AND ALLIED CRAFTWORKERS LOCAL UNION NO. 2, NY June 1, 2021 – May 31, 2026

BRICKLAYERS & ALLIED CRAFTWORKERS HEAVY & HIGHWAY AGREEMENT between EASTERN CONTRACTORS ASSOCIATION, INC. & CONSTRUCTION EMPLOYERS ASSOCIATION OF CENTRAL NEW YORK, INC. and BRICKLAYERS AND ALLIED CRAFTWORKERS LOCAL UNION NO. 2, NY/VT June 1, 2021 – May 31, 2026

NORTHWEST REGIONAL AGREEMENT between THE ASSOCIATIONS and the NORTHEAST REGIONAL COUNCIL OF CARPENTERS of the UNITED BROTHERHOOD OF CARPENTERS AND JOINERS OF AMERICA June 1, 2021 – May 31, 2026

MEMORANDUM OF AGREEMENT between LABOR RELATIONS DIVISION WESTERN NEW YORK REGION ASSOCIATED GENERAL CONTRACTORS OF NEW YORK STATE LLC and NORTHEAST REGIONAL COUNCIL OF CARPENTERS UNITED BROTHERHOOD OF CARPENTERS AND JOINERS OF AMERICA May 1, 2022 – April 30, 2025

AGREEMENT between LABOR RELATIONS DIVISION WESTERN NEW YORK REGION ASSOCIATED GENERAL CONTRACTORS OF NEW YORK STATE LLC and NORTHEAST REGIONAL COUNCIL OF CARPENTERS UNITED BROTHERHOOD OF CARPENTERS AND JOINERS OF AMERICA May 1, 2019 – April 30, 2022

MEMORANDUM OF AGREEMENT between CONSTRUCTION INDUSTRY EMPLOYERS ASSOCIATION and CEMENT MASONS LOCAL UNION NO. 111 May 15, 2021 – June 31, 2026

AGREEMENT between CONSTRUCTION INDUSTRY EMPLOYERS ASSOCIATION, INC. and the CEMENT MASONS' LOCAL UNION NO. 111 May 15, 2016 – May 14, 2021

INSIDE CONSTRUCTION AGREEMENT by and between LOCAL UNION 43, INTERNATIONAL BROTHERHOOD OF ELECTRICAL WORKERS and FINGER LAKES, NY CHAPTER NATIONAL ELECTRICAL CONTRACTORS ASSOCIATION June 1, 2021 – May 31, 2024

AGREEMENT by and between the NATIONAL ELEVATOR BARGAINING ASSOCIATION and the INTERNATIONAL UNION OF ELEVATOR CONSTRUCTORS July 9, 2022 – July 8, 2027

COLLECTIVE BARGAINING AGREEMENT of INTERNATIONAL UNION OF PAINTERS & ALLIED TRADES OF AMERICA & CANADA AFL-CIO DISTRICT COUNCIL #4 GLAZIERS ARCHITECTURAL METAL & GLASSWORKERS OF WESTERN NEW YORK and INDEPENDENT CONTRACTORS May 1, 2022 – April 30, 2025

AGREEMENT between THE INTERNATIONAL ASSOCIATION OF HEAT & FROST INSULATORS & ALLIED WORKERS LOCAL NO. 30 SYRACUSE, NEW YORK and THE SYRACUSE INSULATION CONTRACTORS May 1, 2020 – April 30, 2023

WORKING AGREEMENT between THE IRON WORKERS UPSTATE LOCALS OF NEW YORK AND VICINITY, CONSISTING OF INTERNATIONAL ASSOCIATION OF BRIDGE, STRUCTURAL, ORNAMENTAL, AND REINFORCING IRON WORKERS LOCAL UNIONS NOS. 6, 9, 12, 33, 60 AND 440 and UPSTATE IRON WORKER EMPLOYERS ASSOCIATION, INC. July 1, 2021 – June 30, 2024

WORKING AGREEMENT between LABORERS INTERNATIONAL UNION OF NORTH AMERICA UPSTATE NEW YORK LABORERS LOCAL UNION NO. 633 and CONSTRUCTION EMPLOYERS ASSOCIATION OF CENTRAL NEW YORK, INC. June 1, 2018 – May 31, 2022

AGREEMENT between LABOR RELATIONS DIVISION CENTRAL NEW YORK REGION ASSOCIATED GENERAL CONTRACTORS OF NEW YORK STATE, LLC and LOCALS 633, 785 AND 1822 LABORER'S INTERNATIONAL UNION OF NORTH AMERICA April 1, 2019 – March 31, 2022

MILLWRIGHT AGREEMENT between THE EASTERN MILLWRIGHT REGIONAL COUNCIL representing MILLWRIGHTS LOCAL UNION 1163 and the MILLWRIGHT CONTRACTORS, ASSOCIATION, INC. June 1, 2021 – May 31, 2024

OPERATING ENGINEERS BUILDING AGREEMENT between THE ASSOCIATIONS and LOCAL NO. 158 OF THE INTERNATIONAL UNION OF OPERATING ENGINEERS March 1, 2019 – February 28, 2023

AGREEMENT between LABOR RELATIONS DIVISION OF CENTRAL NEW YORK REGION ASSOCIATED GENERAL CONTRACTORS OF NEW YORK STATE, LLC and INTERNATIONAL UNION OF OPERATING ENGINEERS LOCAL UNION NO. 158 April 1, 2019 – March 31, 2023

UP-STATE NEW YORK TECHNICAL ENGINEERS AGREEMENT 2021-2026 between INDEPENDENT EMPLOYERS and INTERNATIONAL UNION OF OPERATING ENGINEERS LOCALS 17, 463, & 158 April 1, 2021 – March 31, 2026

MASTER COLLECTIVE BARGAINING AGREEMENT by and between PAINTERS DISTRICT COUNCIL NO. 4 and INDEPENDENT CONTRACTORS May 1, 2022 – April 30, 2027

PLASTERERS & CEMENT MASONS UNION LOCAL #9 BUFFALO, NEW YORK COLLECTIVE BARGAINING AGREEMENT April 1, 2020 – March 31, 2023

AGREEMENT by and between THE MECHANICAL TRADES AND MASTER PLUMBERS ASSOCIATION OF CENTRAL NEW YORK, INC. and PLUMBERS & STEAMFITTERS LOCAL 267 May 1, 2022 – April 30, 2024

AGREEMENT by and between ROOFING CONTRACTORS ASSOCIATION, INC. and LOCAL 195 OF NEW YORK UNITED UNION OF ROOFERS, WATERPROOFERS AND ALLIED WORKERS, AFL-CIO June 1, 2022 – May 31, 2025

AGREEMENT by and between CENTRAL NEW YORK SHEET METAL CONTRACTORS ASSOCIATION INC. and LOCAL UNION NO. 58 OF SHEET METAL WORKERS' INTERNATIONAL ASSOCIATION May 1, 2021 – April 30, 2026

AGREEMENT between NATIONAL FIRE SPRINKLER ASSOCIATION, INC. and ROAD SPRINKLER FITTERS' LOCAL UNION NO. 669 April 1, 2020 – March 31, 2025

WORKING AGREEMENT between TEAMSTERS LOCAL NO. 317 affiliated with INTERNATIONAL BROTHERHOOD OF TEAMSTERS and CONSTRUCTION EMPLOYERS ASSOCATION OF CENTRAL NEW YORK, INC. June 1, 2019 – May 31, 2023

HEAVY AND HIGHWAY AGREEMENT with TEAMSTERS LOCAL 317 affiliated with THE INTERNATIONAL BROTHERHOOD OF TEAMSTERS June 1, 2022 – May 31, 2025

SCHEDULE B – LETTER OF ASSENT

This is to certify that the undersigned Contractor:

1. has examined a copy of the Project Labor Agreement negotiated with the Central and Northern New York Building and Construction Trades Council, AFL-CIO and the signatory Unions for use on the I-81 Viaduct Project Phase 1 Contract 2 Project;

2. on behalf of itself and all its employees, accepts and agrees to be bound by the terms and conditions of the Project Labor Agreement, together with any and all amendments and supplements now existing or which are later made hereto;

3. has no commitments or agreements which would preclude its full compliance with the terms and conditions of this Project Labor Agreement; and

4. agrees to secure from any contractor(s) which is or becomes a subcontractor(s), a duly executed Letter of Assent in a form identical to this document prior to commencement of any work.

Name of Contractor:

_____
Print

By: _____

Title: _____

Date: _____

SCHEDULE C – PRE-JOB QUESTIONAIRE

NEW YORK STATE DEPARTMENT OF TRANSPORTATION
I-81 VIADUCT PROJECT PHASE 1 CONTRACT 1
NYSDOT CONTRACT NUMBER D900064 (PIN 3501.91)

PROPOSED TRADE ASSIGNMENTS
PRE-JOB CONFERENCE

TO: Central and Northern New York Building and Construction Trades Council

CLIENT: New York State Department of Transportation

ADMINISTRATOR: The Prime Contractor
Fax: (XXX) XXX-XXXX

CONTRACTOR: _____

CONTRACT#: _____

NAME OF PROJECT: _____

PURPOSE: To make proposed jurisdictional trade assignments, broken down by craft and classification, as well as to discuss details and answer questions relating to the project scope of work, safety and job requirements.

MEETING PLACE: TBD
(XXX) XXX-XXXX Office
(XXX) XXX-XXXX Fax

MEETING DATE: _____

RESPONSE DATE: _____

MEETING DATE: _____

** **PLEASE TYPE IN ALL INFORMATION** **

1. **SCOPE OF WORK:**

2. **ESTIMATED WORK SCHEDULE:**

Approximate Commencement Date: _____

Approximate Completion Date: _____

3. **ADDRESSES:**

Job Location: _____

_____

_____

Company's Local Mailing Address: _____

_____

_____

Trust Fund Billing Address: _____

_____

_____

4. **CONTRACTOR PERSONNEL:**

Project Manager:

Office Telephone # _____

Mobile Telephone # _____

Fax Telephone # _____

Superintendent:

Office Telephone # _____
Mobile Telephone # _____
Fax Telephone # _____

Safety Representative:

Office Telephone # _____
Mobile Telephone # _____
Fax Telephone # _____

Drug Test Result Coordinator: (List in order of contact priority)

Name of First Contact: _____
Office Telephone # _____
Mobile Telephone # _____

Name of Second Contact: _____
Office Telephone # _____
Mobile Telephone # _____

Name of Third Contact: _____
Office Telephone # _____
Mobile Telephone # _____

Dispatch Contact Personnel: The following Contractor personnel are the only ones authorized to call the hiring halls to have craft workers dispatched out to this project:

1. _____

2. _____

3. _____

Referral procedures will be in accordance with the provisions contained within the Project Labor Agreement. The referral procedures are to be posted in the hiring halls in order to be in full compliance with the law.

5. WORKFORCE PROJECTIONS:

Workforce Objectives:

Minority/Women Participation: 20 Percent of Hours by Craft (Federal Definition of Minority)

CRAFT	PEAK No.	AVG No.	TOTAL HOURS	TIER 1 HOURS	TIER 1 %	TIER 2 HOURS	TIER 2 %
Asbestos Workers							
Boilermakers							
Bricklayers							
Carpenters							
• **Carpenters**							
• **Pile Drivers**							
• **Millwrights**							
Cement Masons							
Electrical (Inside Wiremen)							
Elevator Constructors							
Glaziers							
Insulators							
Ironworkers							
• **Structural**							
• **Rebar**							
Laborers							
Operating Engineers							
• **Op. Engineers**							
• **Op. Engineers Technical**							
Painters							
Pipefitters/Plumber							
Plasterers							
Roofers							
Sheetmetal Workers							
Sprinkler Fitters							
Teamsters							

6. OPERATIONAL INFORMATION

Shift Schedule: AM _____ to PM _____

Number of Shifts: _____

Pay Day: Thursday

End of Pay Period: _____

First Aid Facilities: Kits _____

Sanitary Facilities: Portable _____

Job Site Telephone Number: _____

Job Site Fax Number: _____

PROPOSED TRADE ASSIGNMENTS

NAME OF CONTRACTOR: _____

CONTRACT # _____

The following jurisdictional trade assignments are proposed and any Union in disagreement with any of these assignments shall state such disagreement at the pre-job conference and follow the procedure set forth at Article 10, Section 10.4.

Asbestos Workers: _____

Boilermakers: _____

Bricklayers: _____

Carpenters: _____

Cement Masons: _____

Electrical Workers (Inside Wiremen): _____

Electrical Workers (Outside Wiremen): _____

Glaziers: _____

Insulators: _____

Ironworkers (Structural): _____

Ironworkers (Rebar): _____

Laborers: _____

_____

_____

_____

_____

Millwrights: _____

_____

_____

_____

_____

Operating Engineers: _____

_____

_____

_____

_____

Painters: _____

_____

_____

_____

_____

Pile Drivers: _____

_____

_____

_____

_____

Asbestos Workers: _____

_____

_____

_____

_____

Pipefitters/Plumbers: _____

_____

_____

_____

_____

Plasterers: _____
_____
_____
_____
_____

Roofers: _____
_____
_____
_____
_____

Sprinkler Fitters: _____
_____
_____
_____
_____

Sheetmetal Workers: _____
_____
_____
_____
_____

Teamsters: _____
_____
_____
_____
_____

UTILIZATION OF EQUIPMENT

NAME OF CONTRACTOR: _____
_____

CONTRACT #: _____
_____

List of equipment and the proposed assignment of craft for full time use of operation of each piece:

EQUIPMENT:	**CRAFT:**
1. _____	_____
2. _____	_____

3. _____ _____

4. _____ _____

5. _____ _____

6. _____ _____

7. _____ _____

8. _____ _____

9. _____ _____

10. _____ _____

11. _____ _____

12. _____ _____

13. _____ _____

14. _____ _____

15. _____ _____

TOOLS-OF-THE-TRADE: (Part-time use -- lo listing of craft is necessary)

EQUIPMENT:	**EQUIPMENT:**
1. _____	4. _____
2. _____	5. _____
3. _____	6. _____

SCHEDULE D - SIDE LETTER OF AGREEMENT

To the Project Labor Agreement Covering the
I-81 Viaduct Project Contract 1 Phase 1

This Side Letter of Agreement shall be binding on all entities (Unions, Contractors and/or others) covered by the Project Labor Agreement covering the I-81 Viaduct Project Phase 1 Contract 2("PLA"), entered into on the ____ day of _____, 2023, to the same extent as if incorporated therein.

This provision will not be used if the resulting participation totally excludes or completely prevents a building trades craft discipline from participating with any particular subcontractor with respect to Covered Work for that trade.

REFERRALS FOR SUBCONTRACTORS WORKING AS APPROVED
DISADVANTAGED BUISNESS ENTERPRISES

Notwithstanding Article 4, Section 2 of the PLA, or any provision of that agreement, and to the full extent permitted by law, a Contractor may designate subcontractors, who have been identified in the Contractor's approved Disadvantaged Business Utilization Plan and whose subcontracts in total represent approximately 12 to 15%, as exempt from the hiring hall referral procedure of Article 4, Section 2, and instead that subcontractor may request the first employee from the hiring hall and then use two of its existing employees.. To the extent such a subcontractor uses more than three employees on Covered Work, the PLA hiring hall provision will apply beginning with the 4th employee and then continue with one (contractor's employee) and one (hiring hall referral) until the requirements for that craft are met. For purposes of applying this exemption to individual subcontractors, the work of each building trade craft discipline shall be considered separately in striving for compliance with the contractor's approved Disadvantaged Business Utilization Plan. Any excluded subcontractor has the option of using the above hiring hall (with the 25% drag along) procedure of Article 4, Section 2 starting with its first employee for Covered Work.

Any disputes arising under this Side Letter of Agreement are subject to Article 7 (Work Stoppages and Lock Outs) and Article 9 (Grievance and Arbitration Procedure) of the PLA.

IN WITNESS WHEREOF the parties have caused this Agreement to be executed and effective as of the _____ day of _____, 2023.

FOR THE PRIME CONTRACTOR

BY: _____
(Name/Title)

FOR THE BUILDING & CONSTRUCTION TRADES
CENTRAL AND NORTHERN NEW YORK BUILDING CONSTRUCTION TRADES COUNCIL

BY: _____
(Name/Title)

FOR THE LOCAL UNIONS

INTERNATIONAL ASSOCIATION OF HEAT AND FROST INSULATORS AND ALLIED WORKERS, LOCAL NO. 30

BY: _____
(Name/Title)

BOILERMAKERS' UNION LOCAL NO. 175

BY: _____
(Name/Title)

BRICKLAYERS AND ALLIED CRAFT LOCAL NO. 2

BY: _____
(Name/Title)

INTERNATIONAL BROTHERHOOD OF ELECTRICAL WORKERS UNION LOCAL NO. 43

BY: _____
(Name/Title)

INTERNATIONAL ASSOCIATION OF BRIDGE, STRUCTURAL AND ORNAMENTAL IRON WORKERS LOCAL NO. 60

BY: _____
(Name/Title)

CONSTRUCTION AND GENERAL LABORERS' LOCAL NO.633

BY: _____
(Name/Title)

INTERNATIONAL UNION OF OPERATING ENGINEERS LOCAL NO. 158

BY: _____
(Name/Title)

INTERNATIONAL UNION OF OPERATING ENGINEERS TECHNICAL ENGINEERING DIVISION LOCAL 158

BY: _____
(Name/Title)

UNITED ASSOCIATION OF JOURNEYMEN AND APPRENTICES OF TIIE PLUMBING AND PIPEFITTING INDUSTRY LOCAL 81

BY: _____
(Name/Title)

UNITED UNION OF ROOFERS, WATERPROOFERS AND ALLIED WORKERS LOCAL NO. 195

BY: _____
(Name/Title)

SHEET METAL WORKERS' INTERNATIONAL ASSOCIATION LOCALN0.58

BY: _____
(Name/Title)

INTERNATIONAL BROTHERHOOD OF TEAMSTERS, CHAUFFEURS, WAREHOUSEMEN AND HELPERS LOCAL NO. 317

BY: _____
(Name/Title)

INTERNATIONAL UNION OF ELEVATOR CONSTRUCTORS, LOCAL NO. 62

BY: _____
(Name/Title)

DISTRICT COUNCIL NO. 4 GLAZIERS LOCAL NO. 677

BY: _____
(Name/Title)

DISTRICT COUNCIL NO. 4 PAINTERS LOCAL NO. 31

BY: _____
(Name/Title)

ROAD SPRINKLER FITTERS LOCAL NO. 669

BY: _____
(Name/Title)

MILLWRIGHTS LOCAL UNION 1163

BY: _____
(Name/Title)

NORTH ATLANTIC STATES REGIONAL COUNCIL OF CARPENTERS, LOCAL 277

BY: _____
(Name/Title)

OPERATIVE PLASTERERS & CEMENT MASONS LOCAL NO. 111

BY: _____
(Name/Title)

PLASTERERS & CEMENT MASONS LOCAL NO. 9

BY: _____
(Name/Title)

SCHEDULE E - WAIVER OF EMPLOYEE BENEFIT CONTRIBUTIONS

Concerning the Project Labor Agreement Covering the
I-81 VIADUCT PROJECT PHASE I CONTRACT 2
NYSDOT CONTRACT NUMBER D900056

In accordance with the provisions of Article 11, Section 2 of the Project Labor Agreement covering the I-81 Viaduct Project Phase 1 Contract 2 Project, I am hereby waiving the right to payment on my behalf of contributions into one or more of the applicable jointly trusteed funds designated on Schedule A and, in lieu of such payments and benefit coverage, am requesting and directing that I receive an equivalent amount of such benefit payments either (i) with coverage under my employer's bona fide private benefit plans, provided such plans satisfy the requirements of the Internal Revenue Code, or (ii) by electing to have my employer include the full amount of such benefit in a supplemental check to me. I acknowledge that when the benefit payments are paid into private plans, the payments to be made on my behalf must equal the total supplement amount set forth at the Wage and Benefit sheet referred in Section 1 of this Article and must be consistent with the requirements of Section 220, and that any shortfall will be included in a supplemental check issued to me by my employer.

Date:_____ Signed:_____

Print Name of Employer: _____