I-81 VIADUCT PROJECT - PHASE 1, CONTRACT 1

PIN 3501.90, Contract D900054

DB CONTRACT DOCUMENTS REQUEST FOR PROPOSALS

PART 7

ENGINEERING DATA (PART 1 OF 2)

Final June 17, 2022

ENGINEERING DATA

TABLE OF CONTENTS

ASBESTOS SURVEY REPORTS

Asbestos Survey Reports

Watts Architects &Engineers
95 Perry Street
Suite 300
Buffalo, NY 14203
120 East Washington Street
Suite 414
Syracuse, NY 13202
325 Gold Street
Suite 701
Brooklyn, NY 11201

BRIDGE ASBESTOS INSPECTION RESULTS

NYSDOT D031085, PIN 3501.60 – I-81 Viaduct Replacement or New Urban Arterial City of Syracuse, Onondaga County

BIN 1072781 - I-81 (Former I-481) SB over Totman Road
BIN 1072791 - I-481 SB over Thompson Road
BIN 1072792 - I-81 (Former I-481) NB over Thompson Road
BIN 1093561 - I-81 (Former I-481) SB over Manlius Center Road (Route 290)
BIN 1093571 - I-81 (Former I-481) SB over Conrail Railroad
BIN 1093572 - I-81 (Former I-481) NB over Conrail Railroad
BIN 1093682 - I-81 (Former I-481) NB over I-90
BIN 1093562 - I-81 (Former I-481) NB over Manlius Center Road (Route 290)
BIN 1031720 – South Bay Road over I-81

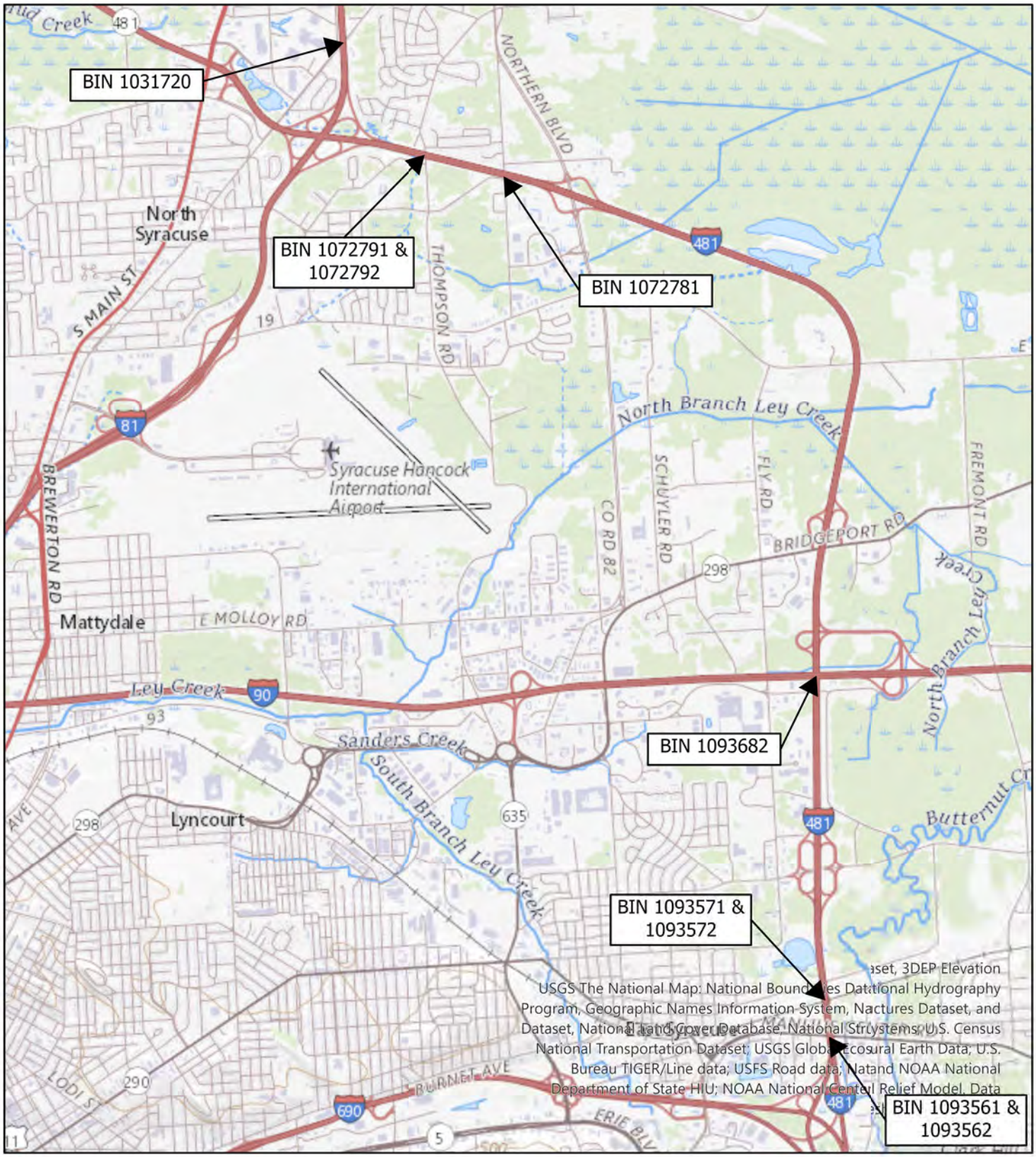

0 0.45 0.9 1.8 Miles

Watts Architects &Engineers

Project Location Map - Bridge Asbestos Inspections

NYSDOT D031085, I-81 Viaduct Replacement
or New Urban Arterial
City of Syracuse, Onondaga County, New York

May 2022

Watts
Architects
&Engineers

Bridge Widening and Rehabilitation

Watts
Architects
&Engineers

BIN 1072781

I-81 (Former I-481) SB over Totman Road

BIN 1072781
Location: I-481 SB over Totman Road

NYSDOT D031085 PIN 3501.60 - I-81 Viaduct Replacement or New Urban Arterial
City of Syracuse, Onondaga County
Bridge Asbestos Assessment Results

No asbestos containing materials have been identified on this bridge.

The following summarizes the results of the most recent asbestos survey and record plan review.

Watts Inspection Findings (December 2013)

A bridge inspection was completed on 12/11/2013 and the following suspect ACMs were identified and sampled:

- Bearing pad
- Grey masonry paint
- Grey caulk at fence on top of sidewall

The sampled materials were not positive for asbestos, per laboratory analytical results.

Review of Historic Plans and Previous Asbestos Survey Information

Record plans were reviewed in support of the field survey.

- Contract D250416 (dated 1982) - No suspect materials were identified in the review of this record plan set. The NYSDOT has confirmed that they do not consider Type D waterstop to be a suspect material.
- Contract D259214 (dated 2002) – No suspect materials were identified in the review of this record plan set.
- A previous asbestos survey completed by LaBella in 2001 was reviewed in support of this project. No asbestos containing materials were identified.

No additional suspect ACM sampling has been identified for BIN 1072781.

Watts Architecture & Engineering

BRIDGE ASBESTOS FIELD INSPECTION FORM

BIN Number/Location: 1072781 (481 SB over Totman Rd)
Inspection Date: 12/11/13
Project Name: : I-81 Viaduct Replacement or New Urban Arterial
PIN Number: PIN: 3501.60, D031085
Inspector(s): William Koch
Watts Project No: 13092

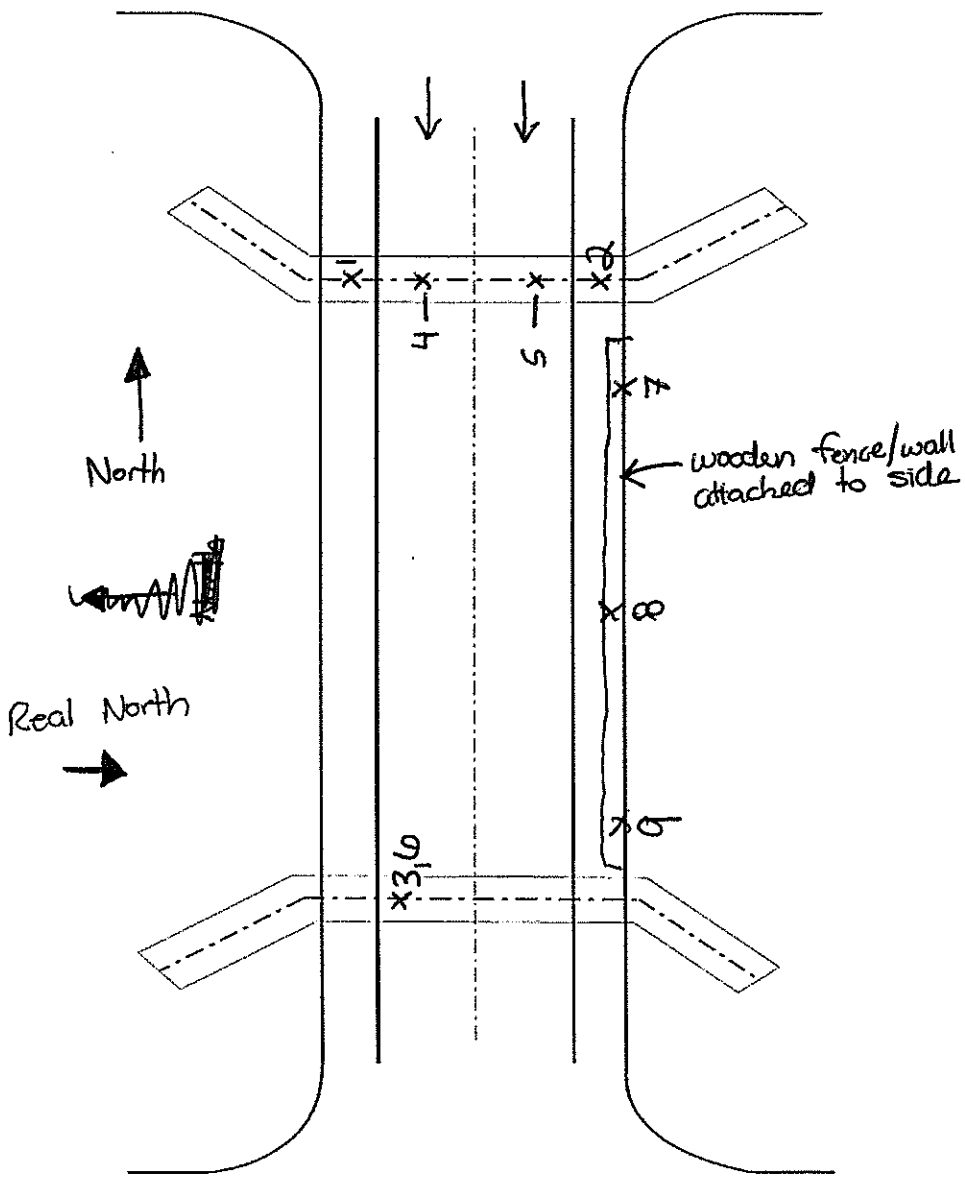

SAMPLE LOCATION PLAN VIEW - N.T.S.

Field Inspection Checklist Item	Investigated	Present	Sampled	
Girder Paint	☒	☐	■	
Truss Paint	☒	☐	☐	
Abutment Coating	☐	☐	☒	4-6
Abutment Caulk	☒	☐	☐	
Abut. Exp. Jt. Filler	☒	☐	☐	
Headwall Sheet Packing	☒	☐	☐	
Bearing Pad	☐	☐	☒	1-3
Transite Pipe	☒	☐	☐	
Pipe Coating/Wtr. Proof	☒	☐	☐	
Scupper Wtr. Proof	☒	☐	☐	
Dum Dum Paint	☒	☐	☐	
Deck Caulk along fence	☒	☐	☒	7-9
Deck Exp. Jt. Filler	☒	☐	☐	
Approach Sheet Packing	☒	☐	☐	
Railing Paint	☒	☐	☐	
Railing Caulk	☒	☐	☐	
Sidewalk Caulk	☒	☐	☐	
Lighting Pole Caulk	☒	☐	☐	
Masonry Castings	☒	☐	☐	
Miscellaneous Tar	☒	☐	☐	
Utilities	☐	☐	☐	
Other _____	☐	☐	☐	
Other _____	☐	☐	☐	
Other _____	☐	☐	☐	
Other _____	☐	☐	☐	
Other _____	☐	☐	☐	

Notes:
- No exp. caulk
- Grey masonry caulk
- Bearing pads sampled
- No girder paint found

EMSL Analytical, Inc.
490 Rowley Road, Depew, NY 14043
Phone/Fax: (716) 651-0030 / (716) 651-0394
http://www.EMSL.com buffalolab@emsl.com

EMSL Order:	141400415
CustomerID:	WATT50A
CustomerPO:	
ProjectID:	

Attn: **Scott Matthews**
Watts Architecture & Engineering
2610 Salina Street
Syracuse, NY 13205

Phone:	(315) 443-8611
Fax:	(315) 443-8605
Received:	02/04/14 10:00 AM
Analysis Date:	2/9/2014
Collected:	12/11/2013

Project: **13092 - 181 Viaduct Replacement or New Urban Arterial Bin 1072781 - 481 S.B. Over Totman Rd**

Test Report:Asbestos Analysis of Bulk Material

Test	Analyzed Date	Color	Non Asbestos Fibrous	Non Asbestos Non-Fibrous	Asbestos
Sample ID 1072781-1 *141400415-0001*		**Description**	bearing pad		
		Homogeneity	Homogeneous		
PLM NYS 198.1 Friable					**Not Analyzed**
PLM NYS 198.6 VCM					**Not Analyzed**
PLM NYS 198.6 NOB	2/7/2014	Brown /Red			**Inconclusive: None Detected**
TEM NYS 198.4 NOB	2/9/2014	Brown /Red			**None Detected**
Sample ID 1072781-2 *141400415-0002*		**Description**	bearing pad		
		Homogeneity	Homogeneous		
PLM NYS 198.1 Friable					**Not Analyzed**
PLM NYS 198.6 VCM					**Not Analyzed**
PLM NYS 198.6 NOB	2/7/2014	Brown /Red			**Inconclusive: None Detected**
TEM NYS 198.4 NOB	2/9/2014	Brown /Red			**None Detected**
Sample ID 1072781-3 *141400415-0003*		**Description**	bearing pad		
		Homogeneity	Homogeneous		
PLM NYS 198.1 Friable					**Not Analyzed**
PLM NYS 198.6 VCM					**Not Analyzed**
PLM NYS 198.6 NOB	2/7/2014	Brown /Red			**Inconclusive: None Detected**
TEM NYS 198.4 NOB	2/9/2014	Brown /Red			**None Detected**
Sample ID 1072781-4 *141400415-0004*		**Description**	grey masonry paint		
		Homogeneity	Homogeneous		
PLM NYS 198.1 Friable					**Not Analyzed**
PLM NYS 198.6 VCM					**Not Analyzed**
PLM NYS 198.6 NOB	2/7/2014	Gray			**Inconclusive: None Detected**
TEM NYS 198.4 NOB	2/9/2014	Gray			**None Detected**
Sample ID 1072781-5 *141400415-0005*		**Description**	grey masonry paint		
		Homogeneity	Homogeneous		
PLM NYS 198.1 Friable					**Not Analyzed**
PLM NYS 198.6 VCM					**Not Analyzed**
PLM NYS 198.6 NOB	2/7/2014	Gray			**Inconclusive: None Detected**
TEM NYS 198.4 NOB	2/9/2014	Gray			**None Detected**

Initial Report From 02/09/2014 18:29:32

EMSL Analytical, Inc.
490 Rowley Road, Depew, NY 14043
Phone/Fax: (716) 651-0030 / (716) 651-0394
http://www.EMSL.com buffalolab@emsl.com

EMSL Order:	141400415
CustomerID:	WATT50A
CustomerPO:	
ProjectID:	

Test Report:Asbestos Analysis of Bulk Material

Test			Color	Fibrous	Non Asbestos Non-Fibrous	Asbestos
Sample ID	1072781-6		**Description**	grey masonry paint		
	141400415-0006		**Homogeneity**	Homogeneous		
PLM NYS 198.1 Friable						**Not Analyzed**
PLM NYS 198.6 VCM						**Not Analyzed**
PLM NYS 198.6 NOB		2/7/2014	Gray			**Inconclusive: None Detected**
TEM NYS 198.4 NOB		2/9/2014	Gray			**None Detected**
Sample ID	1072781-7		**Description**	grey caulk at fence on top of sidewall		
	141400415-0007		**Homogeneity**	Homogeneous		
PLM NYS 198.1 Friable						**Not Analyzed**
PLM NYS 198.6 VCM						**Not Analyzed**
PLM NYS 198.6 NOB		2/7/2014	Gray			**Inconclusive: None Detected**
TEM NYS 198.4 NOB		2/9/2014	Gray			**None Detected**
Sample ID	1072781-8		**Description**	grey caulk at fence on top of sidewall		
	141400415-0008		**Homogeneity**	Homogeneous		
PLM NYS 198.1 Friable						**Not Analyzed**
PLM NYS 198.6 VCM						**Not Analyzed**
PLM NYS 198.6 NOB		2/7/2014	Gray			**Inconclusive: None Detected**
TEM NYS 198.4 NOB		2/9/2014	Gray			**None Detected**
Sample ID	1072781-9		**Description**	grey caulk at fence on top of sidewall		
	141400415-0009		**Homogeneity**	Homogeneous		
PLM NYS 198.1 Friable						**Not Analyzed**
PLM NYS 198.6 VCM						**Not Analyzed**
PLM NYS 198.6 NOB		2/7/2014	Gray			**Inconclusive: None Detected**
TEM NYS 198.4 NOB		2/9/2014	Gray			**None Detected**

Analyst(s)
Rachel Giese
Rhonda McGee

Rhonda McGee

Rhonda McGee, Laboratory Manager
or other approved signatory

NOB = Non Friable Organically Bound N/A = Not Applicable VCM = Vermiculite Containing Material

-In New York State, TEM is currently the only method that can be used to determine if NOB materials can be considered or treated as non-asbestos containing.
All samples examined for the presence of vermiculite when analyzed via NYS 198.1.
-NYS Guidelines for Vermiculite containing samples are available at http://www.wadsworth.org/labcert/elapcert/forms/VermiculiteInterimGuidance_Rev070913.pdf
EMSL maintains liability limited to cost of analysis. This report relates only to the samples reported above and may not be reproduced, except in full, without written approval by EMSL. EMSL bears no responsibility for sample collection activities or analytical method limitations. Interpretation and use of test results are the responsibility of the client. Samples were received in good condition unless otherwise noted.
This report must not be used by the client to claim product certification, approval, or endorsement by NVLAP, NIST, or any agency of the federal government. This report may contain data that is not covered by the NVLAP accreditation.

Samples analyzed by EMSL Analytical, Inc. Depew, NY NYS ELAP 11606

Initial Report From 02/09/2014 18:29:32

141400415

WATTS ARCHITECTURE & ENGINEERING, P.C.
ASBESTOS BULK SAMPLE CHAIN-OF-CUSTODY

Page: 1 of 1
Date: 12/11/13

Client: C&S / DOT
Watts Project No.: 13092
Project: 181 Viaduct Replacement or New Urban Arterial
Turnaround Requested: ____ 3 Hr. ____ 48 Hr.
Building / Location: BIN 1072781 (481 S.B. over ~~Thompson~~ Totman Rd)
Analysis Requested: ____ 6 Hr. ____ 72 Hr. em 2/4/14
Contact: Scott Matthews at (315) 443-8611
PLM X TEM X 12 Hr. X ~~5 Day~~ 1/week
Email Preliminary Results to: smatthews@watts-ae.com
24 Hr. ____ 6-10 Day

Mail Invoice to: Accounts Payable
Watts Architecture & Engineering, P.C.
95 Perry Street, Buffalo, NY 14203

Mail Report to: Scott Matthews
Watts Architecture & Engineering, P.C.
2610 S Salina Street, Syracuse, NY 13210

Sample Number	Material Description	Sample Location	Laboratory Results PLM	Laboratory Results TEM
1072781 - 1	Bearing Pad	~~East end~~ S. end abutment		
2	" "	~~East end~~ S. end abutment		
3	" "	~~West end~~ N. end abutment		
4	Grey masonry paint	~~East end~~ S. end abutment		
5	" "	~~East end~~ S. end abutment		
6	" "	~~West end~~ N. end abutment		
7	Grey caulk ~~on~~ at fence on top of sidewall	W. side (outer lane) at S. end		
8	" "	W. side (outer lane) middle		
9	" "	W. side (outer lane) N. end		

RECEIVED FEB 04 2014 BY: 10a Fed-X

Sampled By: Scott Matthews/Will Kock J. Matthews Date: 2-3-14 Received By: ____ Date: ____
Relinquished By: Scott Matthews to FedEx Date: ____ Received By: ____ Date: ____
Comments:

C:\Documents and Settings\smatthews\Desktop\BulkForm.xls
12/2/2013

Page 1 Of 1

OrderID: 141400415

Watts
Architects
&Engineers

BIN 1072781 Inspection Photos

I-81 (Former I-481) SB over Totman Road

Photo 1

Photo 2

Photo 3

Photo 4

FED. RD. REG. NO.	STATE	FEDERAL AID PROJECT NO.	SHEET NO.	TOT. SHEE
	NEW YORK	I-481-2(154) IR-81-2(154)	242	380

INTERSTATE RTE. 570 EXTENSION (I-481)
NORTHERN BLVD. TO BEAR ROAD INTERCHANGE
ONONDAGA COUNTY

CAPITAL PROJECT IDENTIFICATION NO. 3107.00

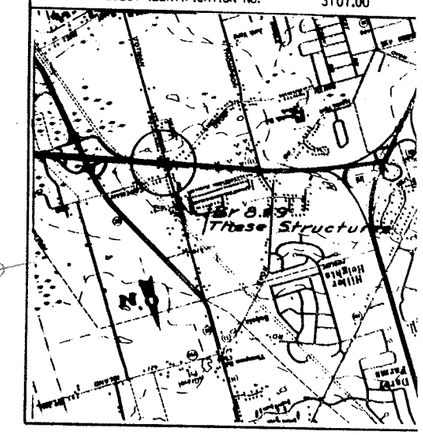

'CICERO QUADRANGLE'

Location Map

Scale: 1"=2000'

481 SB

1072781

Peter Reehlen 11/16/88

Opalka 12/4/90

R.J.R. 11/9/92

Opalka 11/1/94

Douglas E. Heller 11/5/96

Opalka 3/12

Gary W. Lee 8/30 9/1/04

Gary W. Lee 06/29/08

Gary W. Lee 5/15/08

RJR 5/11/10

DJ Hann 5/19

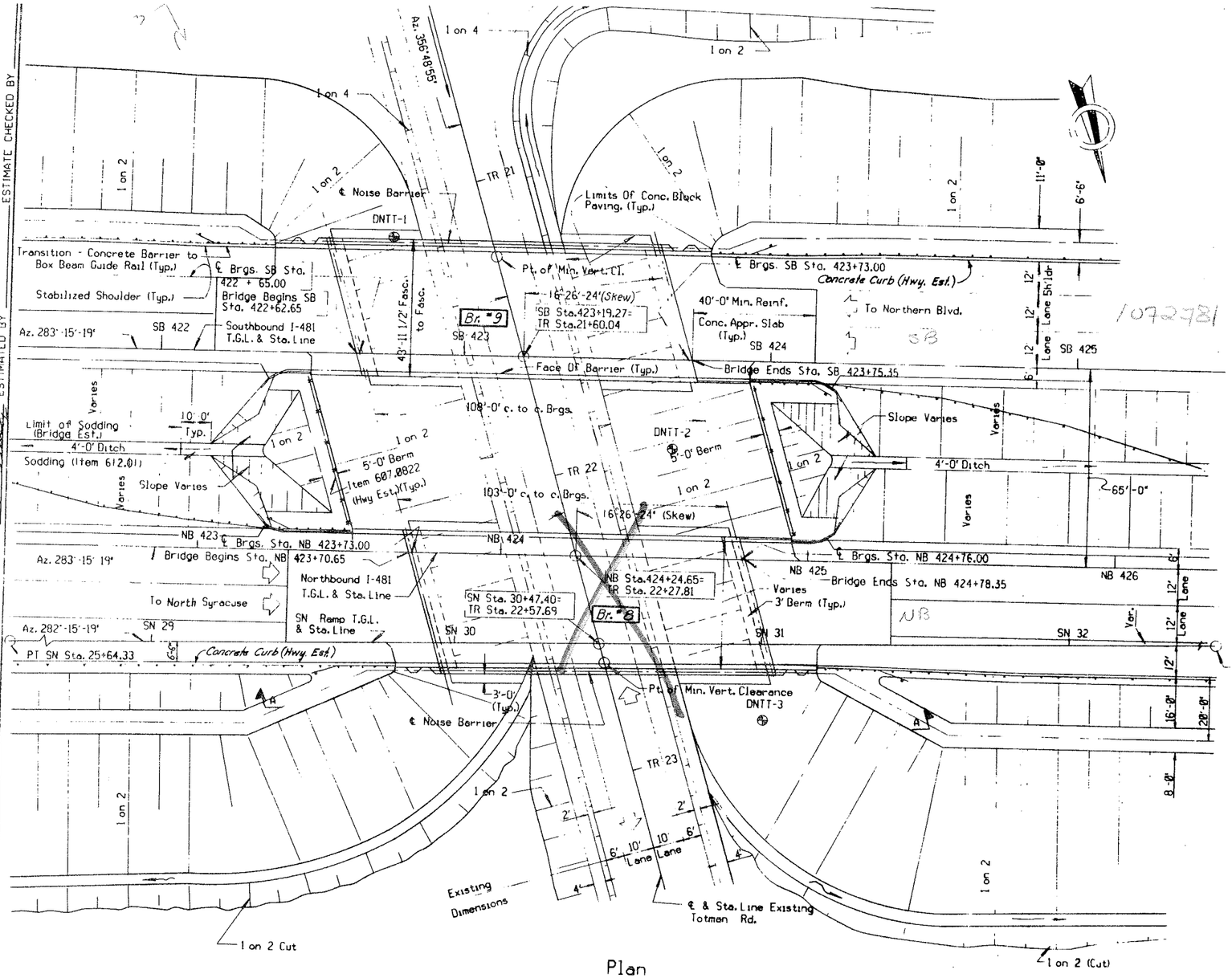

Plan

Scale: 1"=20'-0"

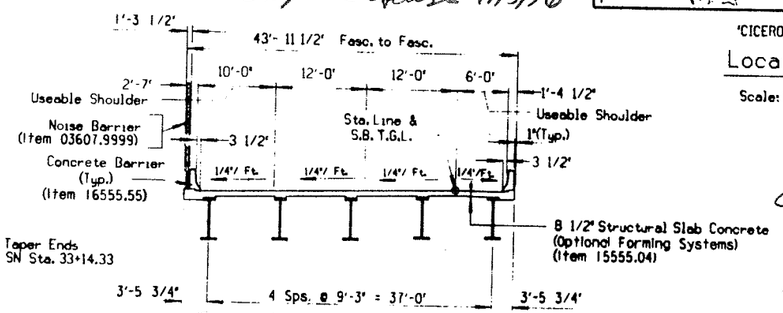

Typical Bridge Section

Southbound I-481 (Bridge #9)

B.I.N. 1072781

Scale: 1"=10'-0"

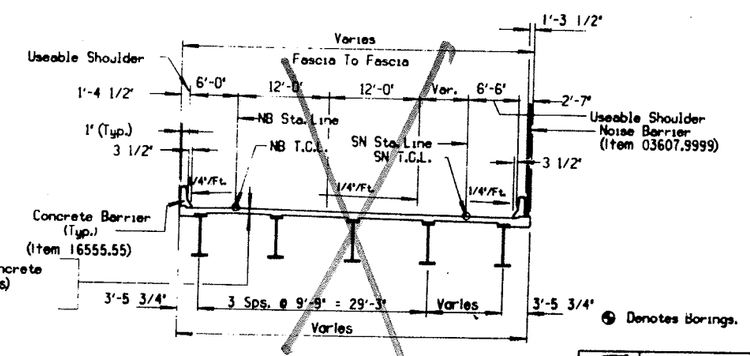

Typical Bridge Section

Northbound I-481 (Bridge #8)

B.I.N. 1072782

Scale: 1"=10'-0"

⊕ Denotes Borings.

LOAD RATINGS

	LOADING	INVENTORY	OPERATING
BRIDGE NO. 8	HS	HS 23 (41 T) W.S.	HS 43 (78 T) W.S.
BRIDGE NO. 9	HS	HS 23 (41 T) W.S.	HS 44 (80T) W.S.

STATE OF NEW YORK
DEPARTMENT OF TRANSPORTATION

Bridges 8 & 9-N.B. & S.B.
Over Totman Rd.

PROJ. ENG. W.J.WINKLER	DATE Dec./82
SQUAD D.J. ROY	DRAWING NO. 1 OF 36

ESTIMATE CHECKED BY
ESTIMATED BY
DETAIL CHECKED BY
DETAILED BY
DESIGN CHECKED BY
DESIGNED BY

D250416

FED. RD. REG. NO.	STATE	FEDERAL AID PROJECT NO.	SHEET NO.	TOTAL SHEETS
	NEW YORK	IR-81-2(154)	248	380

INTERSTATE RTE. 570 EXTENSION (I-481)
NORTHERN BLVD. TO BEAR ROAD INTERCHANGE
ONONDAGA COUNTY

CAPITAL PROJECT IDENTIFICATION NO. 3107.00

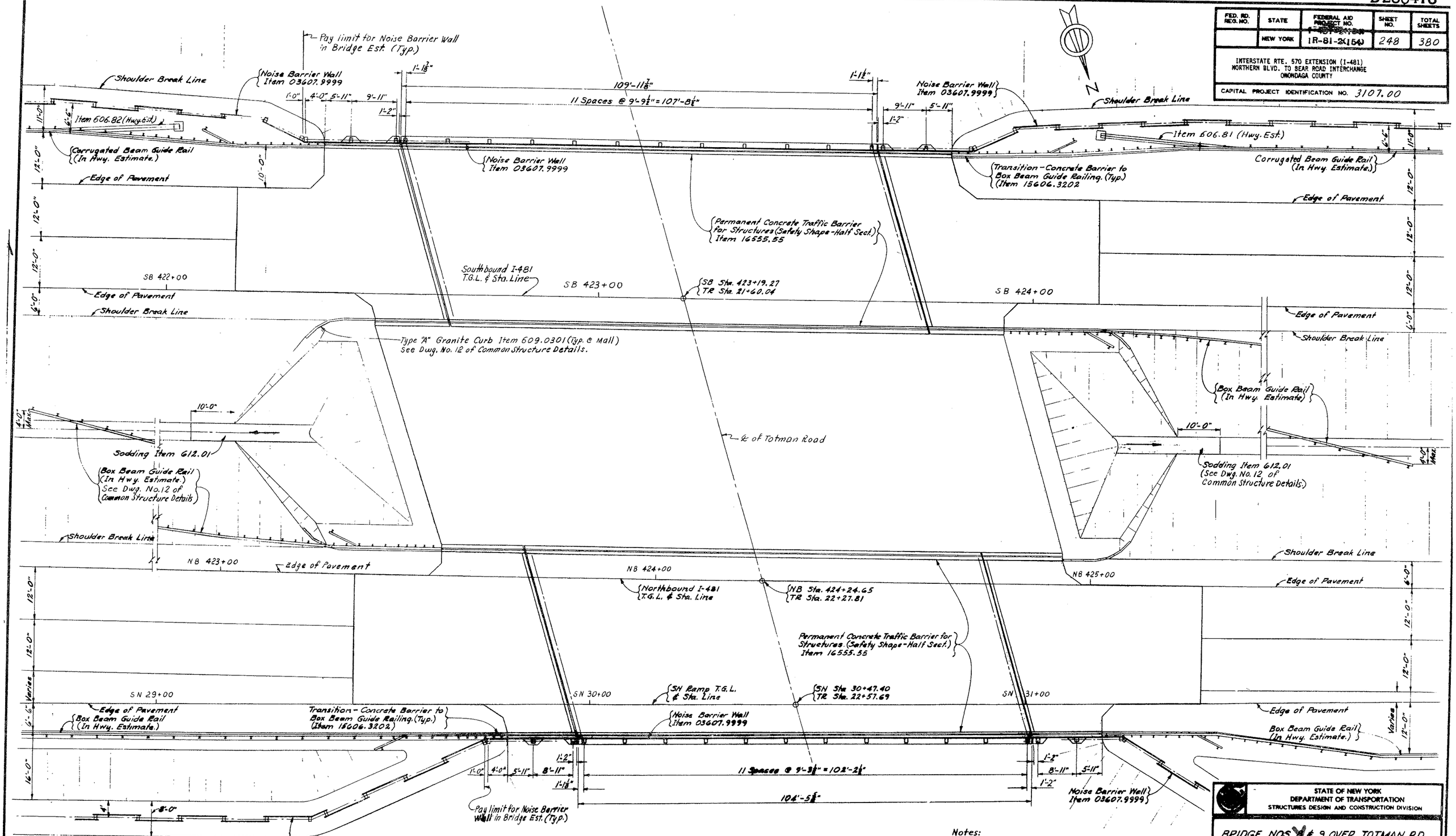

NOISE BARRIER WALL & GUIDE RAIL LAYOUT

Scale 1" = 10'-0"

Notes:

1. For details of Transition - Concrete Barrier to Box Beam Guide Rail see Dwg. No. 13 of Common Structure Details. For Details of Noise Barrier Wall see Dwg. No. 16 of Common Structure Details.
2. The area under Posts for Noise Barrier to be level as similarly shown in "Noise Barrier Support Details" on Dwg. No. 15.

STATE OF NEW YORK
DEPARTMENT OF TRANSPORTATION
STRUCTURES DESIGN AND CONSTRUCTION DIVISION

BRIDGE NOS. 8 & 9 OVER TOTMAN RD.

NOISE BARRIER WALL AND APPROACH GUIDE RAIL LAYOUT

PROJ. ENG. W. J. Winkler	DATE MADE Dec. 18
SQUAD D. J. Roy	DRAWING NO. 7 OF 36

BD 179e (7/69)

FED. RD. REG. NO.	STATE	FEDERAL AID PROJECT NO.	SHEET NO.
	NEW YORK	IR-81-2(154)	249

INTERSTATE RTE. 570 EXTENSION (I-481)
NORTHERN BLVD. TO BEAR ROAD INTERCHANGE
ONONDAGA COUNTY

CAPITAL PROJECT IDENTIFICATION NO. 3107.00

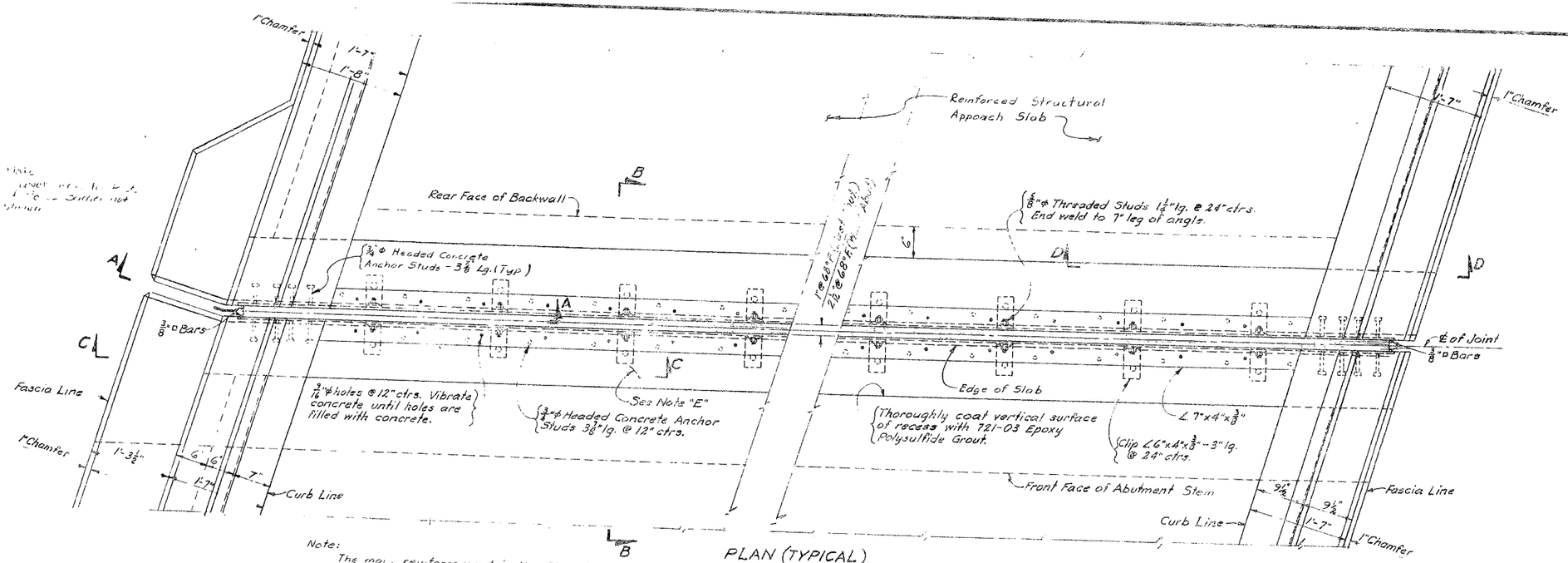

Note:
The main reinforcement in the Structural Slab and the reinforcement in the fascia and traffic barrier are not shown on these details.

PLAN (TYPICAL)
Scale: 1" = 1'-0"

JOINT TABLE		
BRIDGE No.	LOCATION	ITEM No.
8	East Abut.	Item No. 567.31
	West Abut.	Item No. 567.35
9	East Abut.	Item No. 567.31
	West Abut.	Item No. 567.35

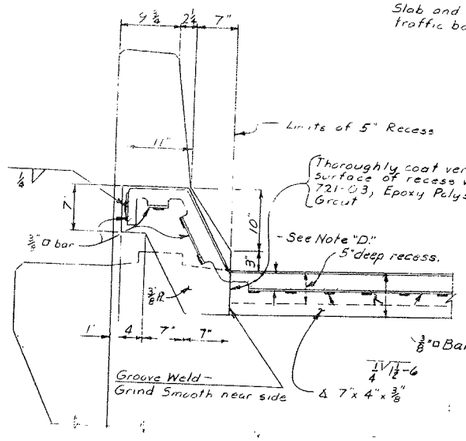

SECTION A-A
Scale: 1" = 1'-0"

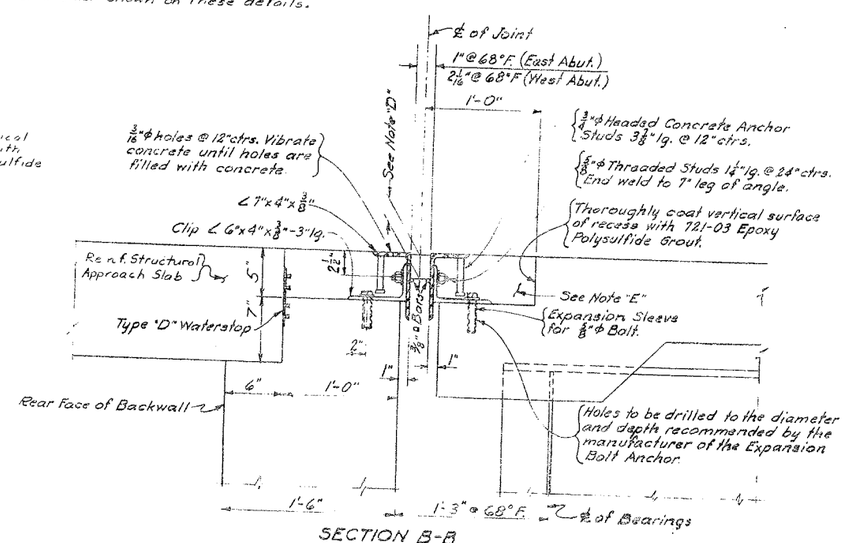

SECTION B-B
Scale: 1 1/2" = 1'-0"

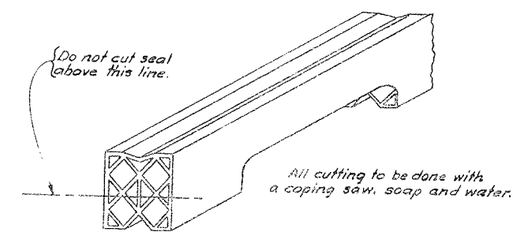

The sealer shall be supplied in one piece for the full length of joint. Splices will not be permitted when the length of this piece is less than 50 feet.

Note "D"
This depth shall be indicated on the shop and shall be such that when the seal is compre 50% of its normal width the top of the seal s not less than 1/4" nor more than 3/8" below th of roadway.

Note "E"
Concrete in recesses on superstructure pr for installing the Armored Joint System shall with the Specifications for the structural slab except that machine finishing will not be req No additional payment will be made for furnis and placing this concrete as this quantity lie within the limits of the area to be paid for the item.

It is desirable to have the Armored Joi its Compression Seal assembled in the shop delivered to the job site ready for installa in its preformed recess in the structural sl In cases where the Armored Joint cannot b assembled in the shop, due to its excessive causing shipping problems, the joint shall sealed with the Compression Seal before th structure is opened to traffic, including cons traffic, and before discontinuing operatio work is suspended during the Winter.

The cost of furnishing and placing the Polysulfide Grout shall be included in the uni bid for the slab item.

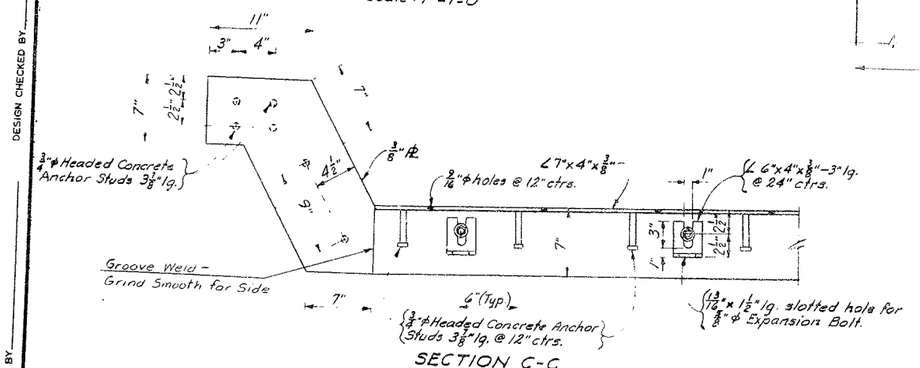

SECTION C-C
(STEEL ONLY SHOWN)
Scale: 1 1/2" = 1'-0"

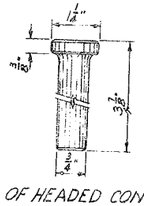

DETAIL OF HEADED CONCRETE ANCHOR STUD
Not to Scale

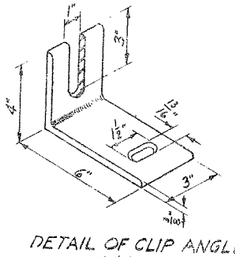

DETAIL OF CLIP ANGLE
Not to Scale

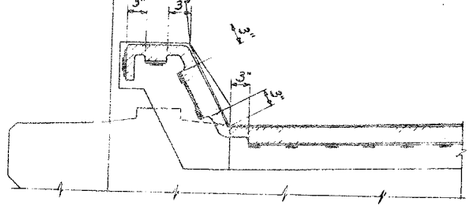

DETAIL FOR CUTTING AND BENDING SEAL
Not to Scale

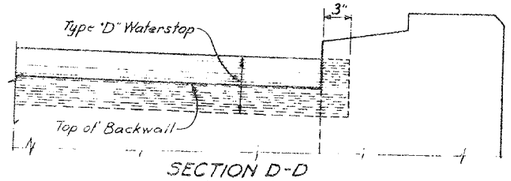

SECTION D-D
Not to Scale

STATE OF NEW YORK
DEPARTMENT OF TRANSPORTATION
STRUCTURES DESIGN AND CONSTRUCTION DIVIS.

BRIDGE NOS. 8 & 9 OVER TOTMAN R

DETAILS OF ARMORED JOINT SYSTEM WITH COMPRESSION SEAL

PROJ. ENG. W. J. Winkler	DATE MADE Dec. 198
SQUAD D. J. Roy	DRAWING NO. 8 OF

DETAILED BY
DESIGN CHECKED BY
DETAIL CHECKED BY
DESIGNED BY

BD 179a (7/80)

D250416

FED. RD. DIST. NO.	STATE	FEDERAL AID PROJECT NO.	SHEET NO.	TOTAL SHEETS
	NEW YORK	IR-81-2(154)	250	380

INTERSTATE RTE. 570 EXTENSION (I-481)
NORTHERN BLVD. TO BEAR ROAD INTERCHANGE
ONONDAGA COUNTY

CAPITAL PROJECT IDENTIFICATION NO. 3107.00

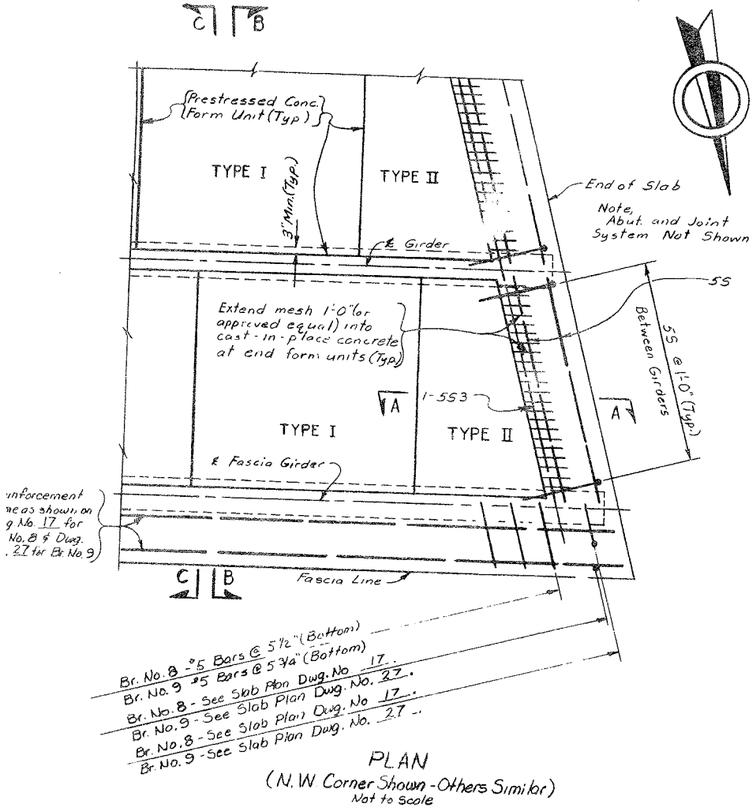

PLAN
(N.W. Corner Shown - Others Similar)
Not to Scale

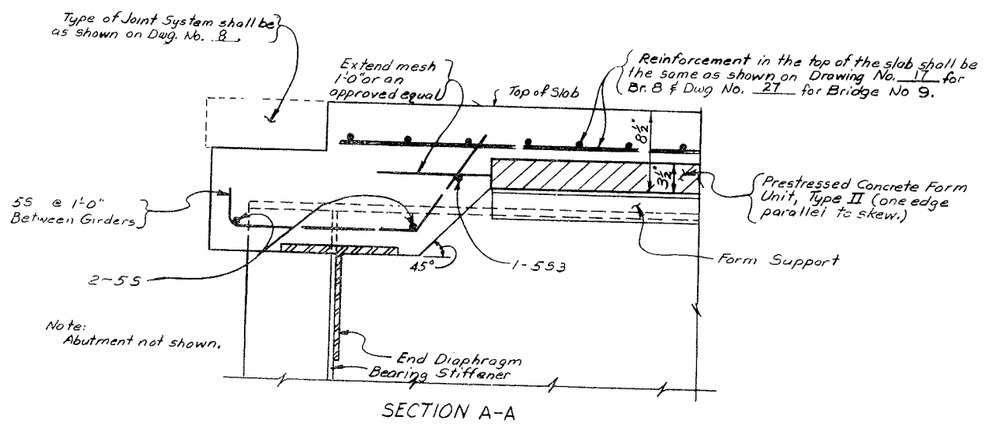

SECTION A-A
Not to Scale

Note:
For Traffic Barrier Details see
Dwg. No. 17 for Br. 8 and
Dwg. No. 27 for Br. 9

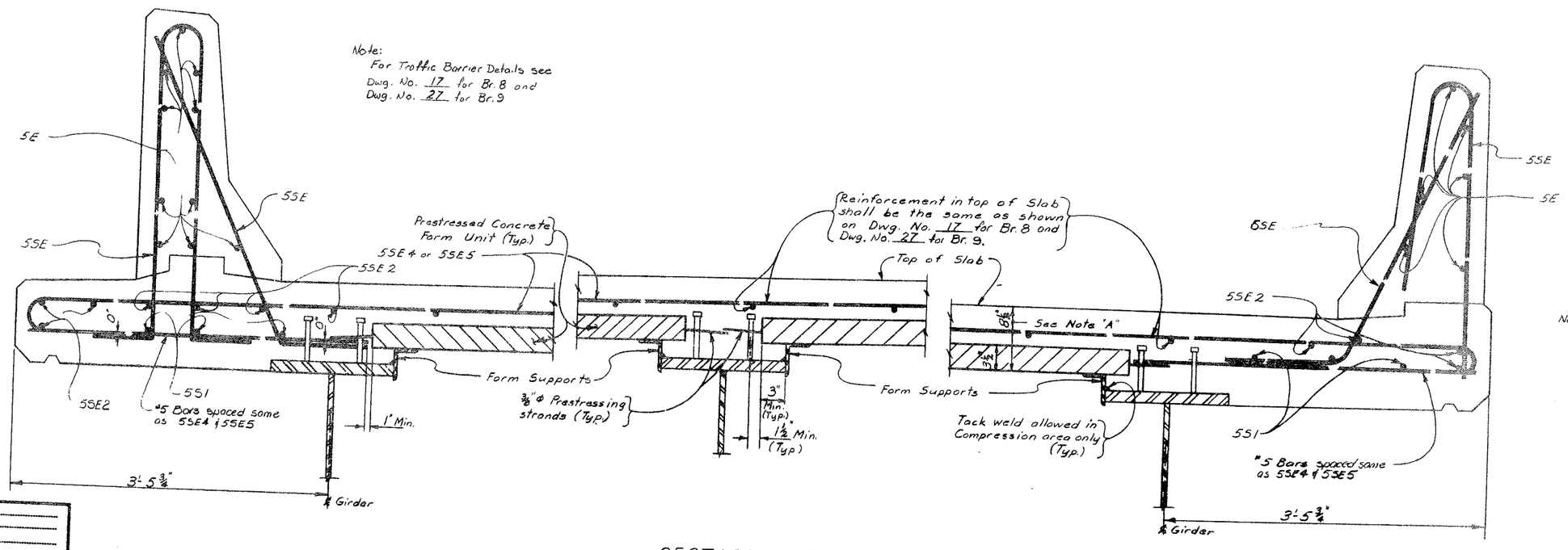

SECTION B-B — BRIDGE NO. 9
SECTION C-C — BRIDGE NO. 8
Scale: 1 1/2" = 1'-0"

Notes,

A. The bottom of the Prestressed Concrete Form Unit shall be parallel to and 8 1/2" below the finished top of the slab; except when the cross-slope of the slab changes between the Girders. In this case, the Prestressed Concrete Form Unit shall be set so the bottom is 8 1/2" below the top of the slab at each edge of the Girder line.

B. For details of Prestressed Concrete Form Units see Dwg. No. 10.

C. No welding of form supports to the top flange in tension zone is allowed.

ASE
T ENGINEER
NS OF
ED BY
CHECKED BY
D BY
CHECKED BY

STATE OF NEW YORK
DEPARTMENT OF TRANSPORTATION
DIVISION OF CONSTRUCTION

BRIDGE NOS. 8 & 9 OVER TOTMAN RD.

PRESTRESSED CONCRETE FORM UNITS LAYOUT

DRAWING NO. 9 OF 36

D250

FED. RD. REG. NO.	STATE	FEDERAL AID PROJECT NO.	SHEET NO.
	NEW YORK	IB-81-2(154)	251

INTERSTATE RTE. 690 EXTENSION (I-481)
NORTHERN BLVD. TO BEAM ROAD INTERCHANGE
ONONDAGA COUNTY

CAPITAL PROJECT IDENTIFICATION NO 3107.0

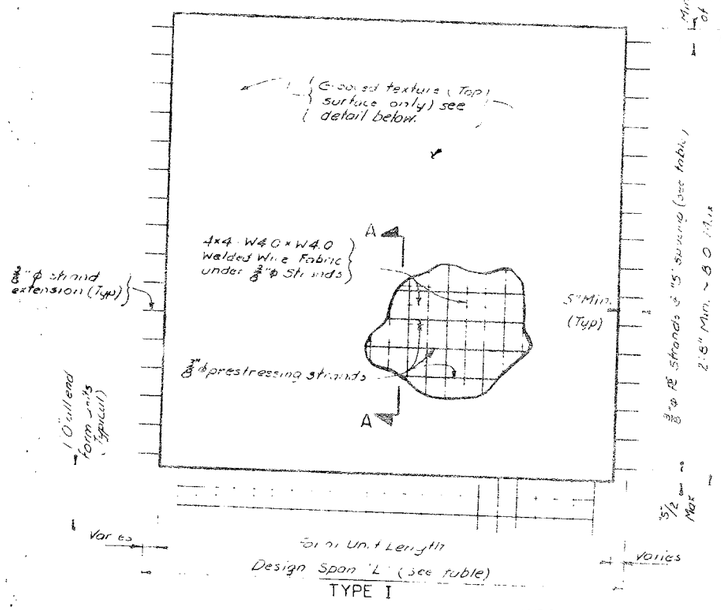

TYPE I

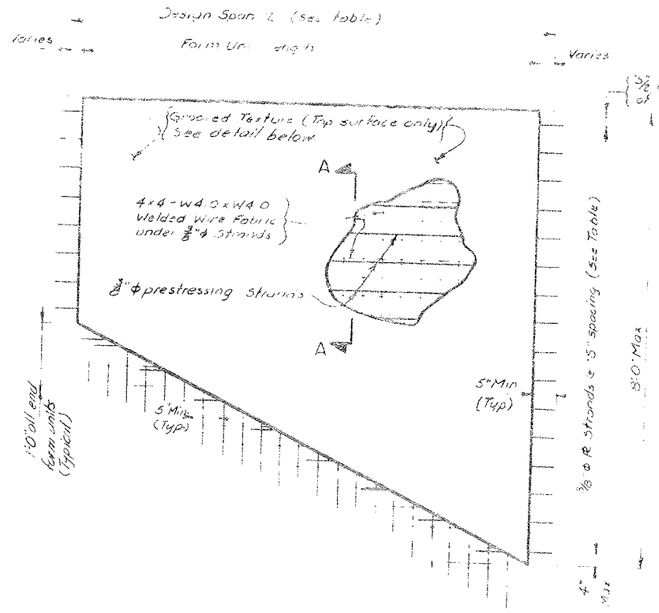

TYPE II

PRESTRESSED CONCRETE FORM UNIT DETAILS

DESIGN SPAN "L"	STRAND SPACING "S"
5.0'-6.0'	6"
5.0'-8.0'	4"
5.0'-9.0'	3"
5.0'-10.75'	2 3/4"

Note:
The Design Span "L" is equal to the beam spacing minus one half the girder top flange width.

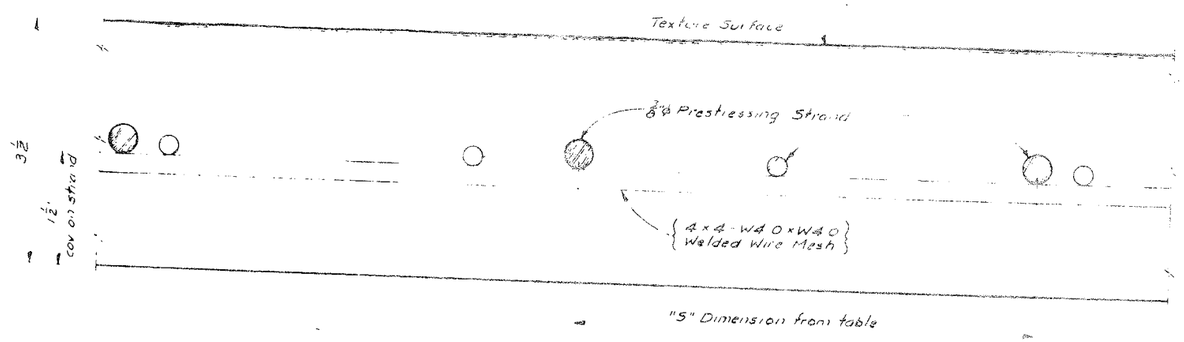

SECTION A-A

FORM UNIT NOTES

The prestressing strands shall be 3/8 inch diameter with a guaranteed ultimate strength of 270 ksi, Jacking force shall be 16,100 lbs. per strand.

Required minimum concrete strength at transfer shall be 4,000 psi.
Required minimum concrete strength at 28 days shall be 5,000 psi. The allowable tension in the prestressed concrete units at transfer shall be 0 f'ci psi, at 28 day strength shall be 0 f'c psi.

Note: This drawing shows typical details, all of which may not be required on any given bridge. Likewise, the skew, beam spacing and other details may not match those in the particular bridge.

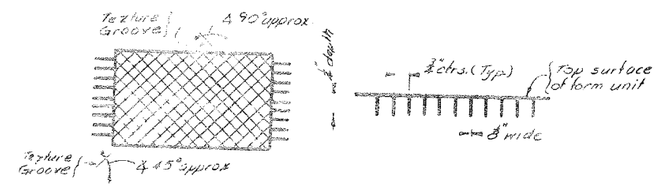

TEXTURE SURFACE DETAIL

Note,
See "Deck Form Options" note on Dwg. Nos. 17

STATE OF NEW YORK
DEPARTMENT OF TRANSPORTATION
DIVISION OF DESIGN AND CONSTRUCTION

BRIDGE NOS. 8 & 9 OVER TOTMAN RD.

PRESTRESSED CONCRETE FORM UNITS - TYPICAL DETAILS

PROJ. ENG. W. J. Winkler | DATE MADE Dec./82

DETAIL CHECKED BY
DETAILED BY
DESIGN CHECKED BY
DESIGNED BY

Noise Barrier Wall shall be installed along the South side of this bridge. For Lin... Wall see Dwg No 7.

Deck Forms Option Note:
The Contractor's attention is directed to the provisions of Item 15555.04 which allow the option of three deck forming systems.

ITEM NO. RES. NO.	STATE	FEDERAL AID PROJECT NO.	SHEET NO.	TOTAL SHEETS
	NEW YORK	[illegible]	268	380

INTERSTATE RTE. 390 EXTENSION (I-481)
NORTHERN BLVD. TO FIRST ROAD INTERCHANGE
ONONDAGA COUNTY

CAPITAL PROJECT IDENTIFICATION NO. 3107.00

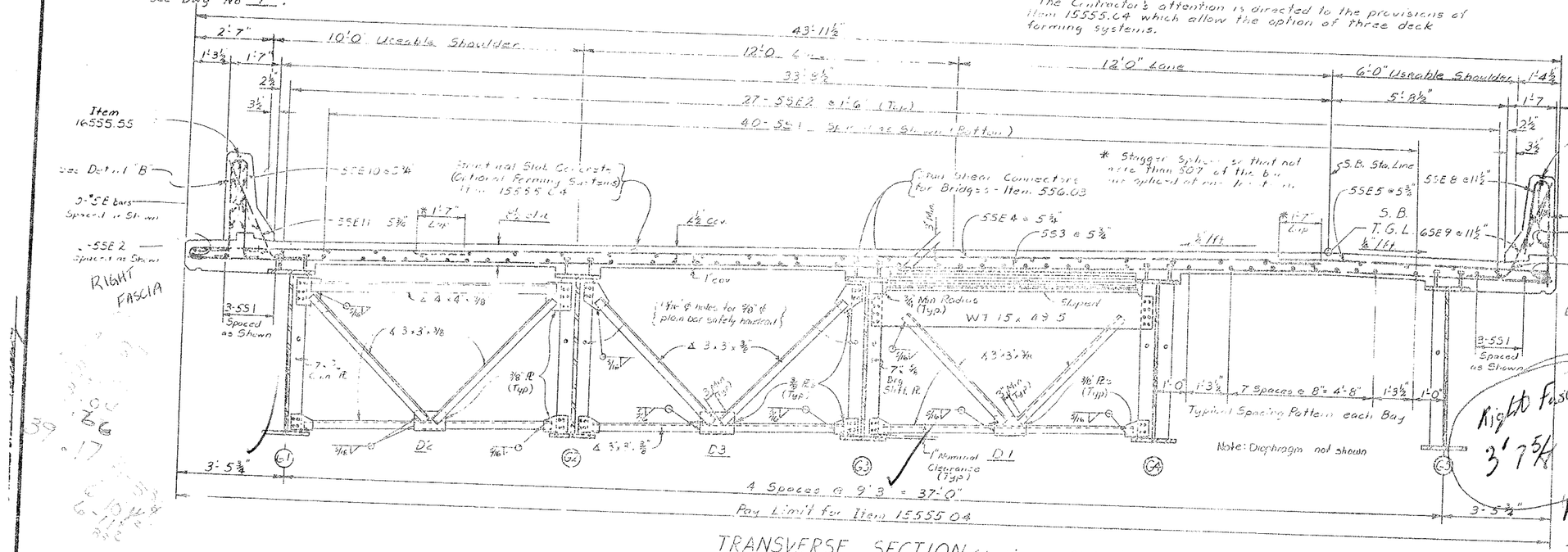

TRANSVERSE SECTION (Looking Up-Station)
Scale: ½" = 1'-0"

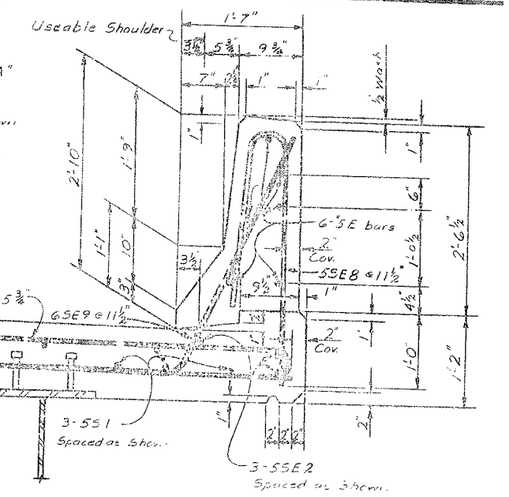

DETAIL "A"
Scale: 1" = 1'-0"

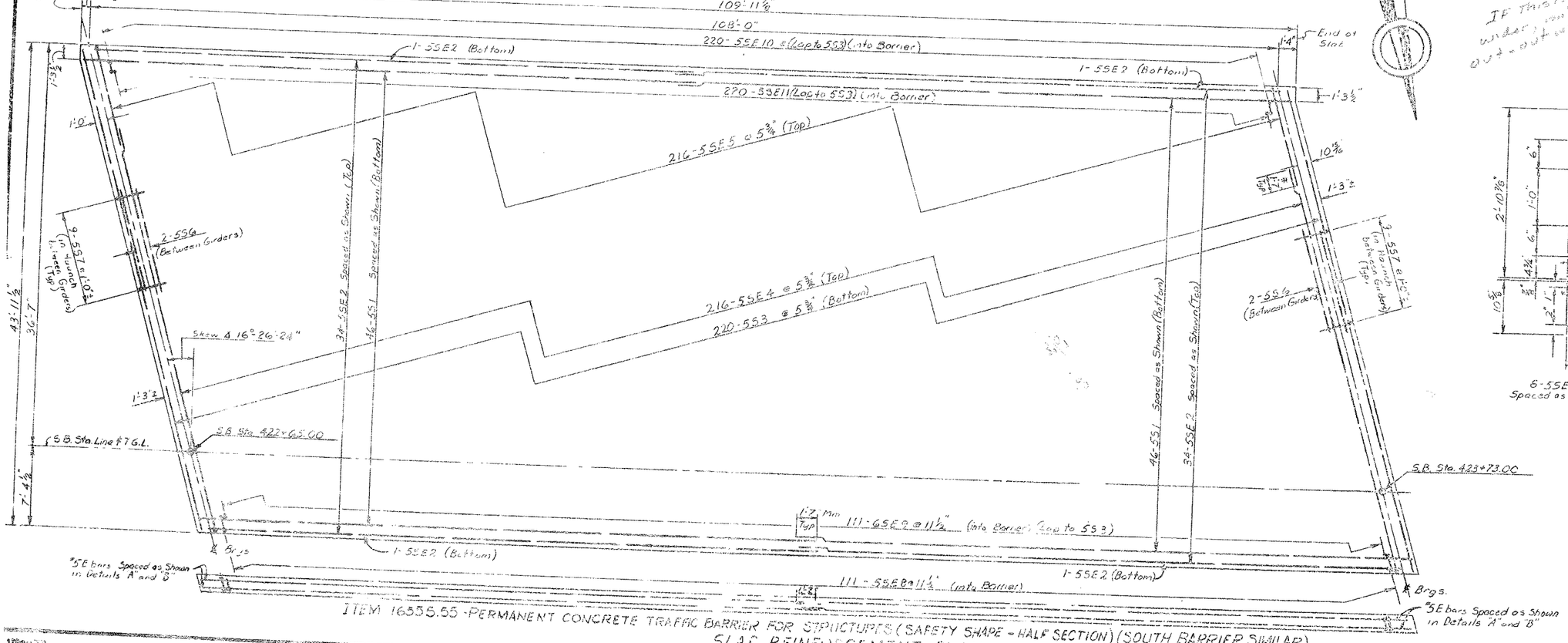

ITEM 16555.55 - PERMANENT CONCRETE TRAFFIC BARRIER FOR STRUCTURES (SAFETY SHAPE - HALF SECTION) (SOUTH BARRIER SIMILAR)
SLAB REINFORCEMENT PLAN
Scale: 1/8" = 1'-0"

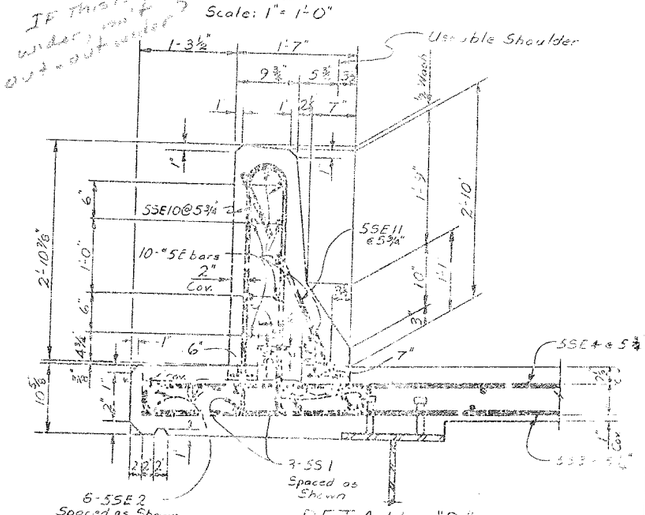

DETAIL "B"
Scale 1" = 1'-0"

Notes,
For Safety Hardrail Details see Dwg No. 5 of Common Structure Details
For End of Slab Haunch Detail, Traffic Barrier Chamfer Detail and Concrete Table see Dwg. No. 28.
For Location of Diaphragms see Dwg No. 28.
For Girder Details see Dwg. No. 27.
For Diaphragm Notes see Dwg. No. 33.

STATE OF NEW YORK
DEPARTMENT OF TRANSPORTATION
STRUCTURES DESIGN AND CONSTRUCTION DIVISION

BRIDGE NO. 3 OVER TOTMAN RD.

TRANSVERSE SECTION AND SLAB BAR LAYOUT

PROJ. ... SCALE ...
SQUAD C. J. ROSE
DRAWING NO. 27 OF 38

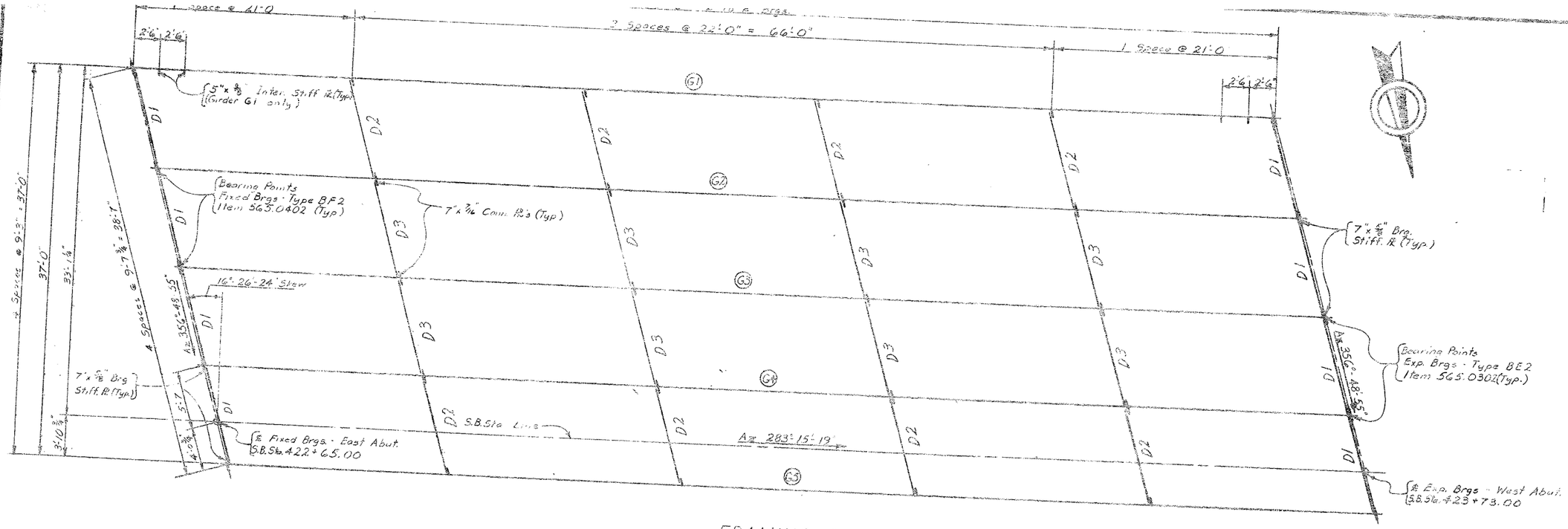

FRAMING PLAN
Scale: 3/16" = 1'-0"

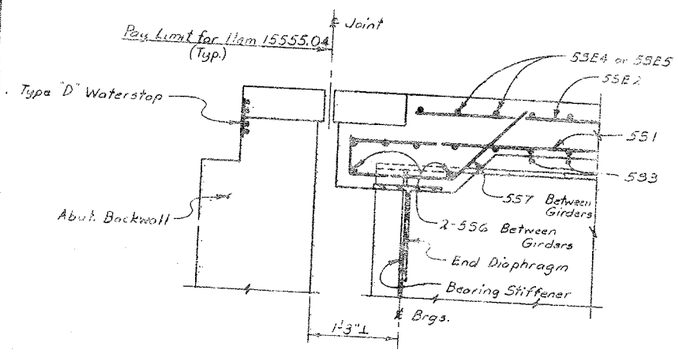

END OF SLAB HAUNCH DETAIL
Scale: 1" = 1'-0"

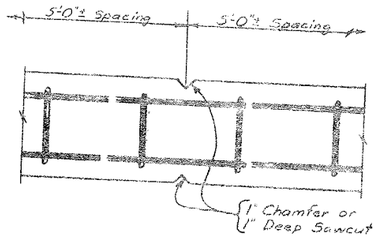

TRAFFIC BARRIER CHAMFER DETAIL
Not to Scale

CONCRETE TABLE		
LOCATION	Struct. Slab Conc. Item 15555.04	Traffic Barrier Item 15555.55
Struct. Slab	4848 S.F.	——
No. Traffic Barrier	——	111 L.F.
So. Traffic Barrier	——	111 L.F.

NOTES FOR DIAPHRAGM DETAILS

1. Where holes are indicated, connections shall be 7/8" diameter high-strength bolts.
2. Cross frames may be fabricated to fit the girders in their erected position and cambered shape, but deflected vertically under the de load of the steel work only.
3. The contractor may place diaphragms on either side of the bearing stiffeners or stiffener connection plates as necessary to correct alignment provided there will be no inteference with other structural details
4. Snipe the outstanding leg of all angles and plates 1" minimum.
5. Tapered or flat shim plates may be used in the connection between skewed diaphragms and the bearing stiffeners or stiffener connectio plates. Variable thicknesses of shim plates may be used. The mini mum thickness of shim plate shall be 1/8" with a maximum number of shim plates permitted at any connection The total thickness of al shim plates used at any connection shall not exceed 1". Shim plate shall have the dimensions of the faying surface. The shim material shall conform to ASTM Designation A36, except that on unpainted structures, the shim material shall conform to ASTM Designation A588 No additional payment will be made for furnishing and placing the shim plates.

Notes,
For Girder Details see Dwg. No. 29
For details of diaphragms D1, D2 and D3 Transverse Section on Dwg. No. 27.
For Bearing Details see Dwg. No. 3 Common Structure Details.

STRUCTURAL SLAB REINFORCEMENT																		
MARK	SIZE	No.	TYPE	LENGTH	A	B	C	D	E	F	G	H	J	K	L	R	S
SS1	5	92	Str.	55-8													
SSE2	5	72	Str.	52-7													
SS3	5	220	Str.	45-6													
SSE4	5	216	1	38-7	0-7	38-0					0		0-5				
SSE5	5	216	1	9-8	0-7	9-1					0		0-5				
SS6	5	16	Str.	7-11													
SS7	5	72	15	2-8				1-2				0-4	0-10		0-10		1-2
SSE8	5	111	2	6-0		2-2	0-9	3-1	0	0-3	0		0	2-2		0-3	
SSE9	6	111	15	4-9				1-3				0	1-4		3-2		3-6
SSE10	5	220	14	8-9	3-4	0-9	3-4	0-8	0-8	0-5						0-3	
SSE11	5	220	15	4-6				1-0				0	1-4		3-2		3-6

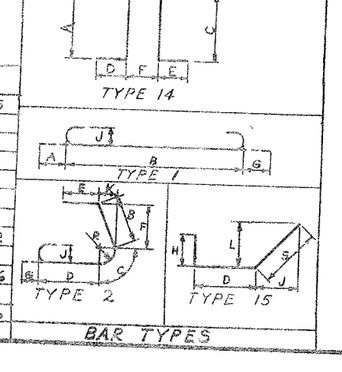

BAR TYPES

DATE ISSUED
PROJECT ENGINEER
IN CHARGE OF
DESIGNED BY
DESIGN CHECKED BY
DETAILED BY
DETAIL CHECKED BY

STATE OF NEW YORK
DEPARTMENT OF TRANSPORTATION
DIVISION OF CONSTRUCTION

BRIDGE NO. 9 OVER TOTMAN RD

FRAMING PLAN AND SLAB DETA

DRAWING NO. 28 OF

STATE | FEDERAL AID PROJECT | IR-81-(30)341

INTERSTATE RTE. 81 EXTENSION (I-
NORTHERN BLVD. TO SEAR ROAD INTERC
ONONDAGA COUNTY

CAPITAL PROJECT IDENTIFICATION NO. 3

FED. RD. REG. NO.	STATE	FEDERAL AID PROJECT NO.	SHEET NO.
	NEW YORK	I-481-2(154) IR-81-2(154)	270

INTERSTATE RTE. 570 EXTENSION (I-481)
NORTHERN BLVD. TO BEAR ROAD INTERCHANGE
ONONDAGA COUNTY

CAPITAL PROJECT IDENTIFICATION NO. 3107.00

* F.P.G.W. = Full Penetration Groove Weld
M.B. = Mill to Bear

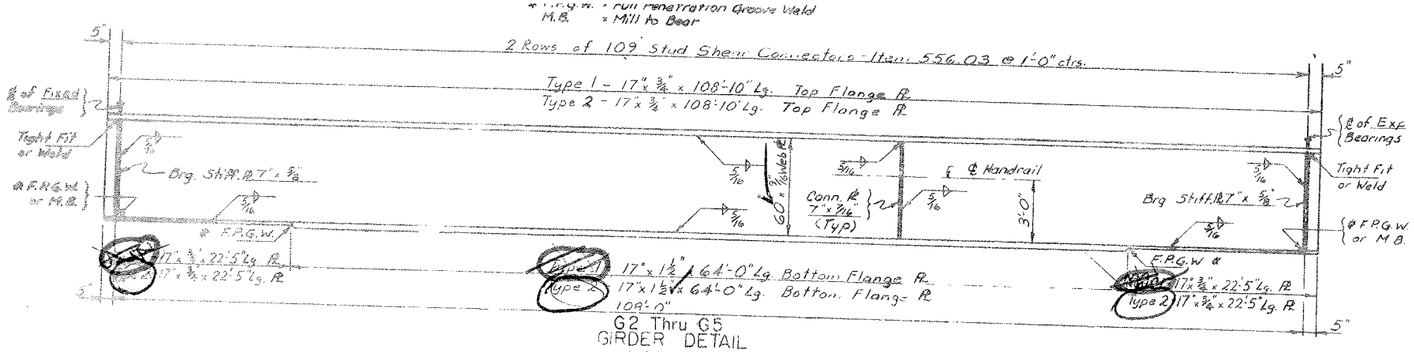

G2 Thru G5
GIRDER DETAIL
Not to Scale

MOMENT & SHEAR TABLE

			℄ BRG	MID PT
G1	D.L.	Moment	—	1932 K'
		Shear	71.6 K	—
	S.D.L.	Moment	—	910 K'
		Shear	33.7 K	—
	L.L.(+)	Moment	—	1484 K'
		Shear	58.5 K	27.9 K
G2 Thru G5	D.L.	Moment	—	2089 K'
		Shear	77.4 K	—
	S.D.L.	Moment	—	522 K'
		Shear	19.3 K	—
	L.L.(+)	Moment	—	1703 K'
		Shear	67.2 K	32.0 K

Type 1 forms are removable or integral prestressed concrete.
Type 2 forms are permanent corrugated metal.

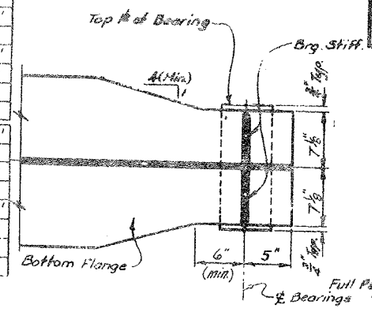

BOTTOM FLANGE TAPER
Not to Scale

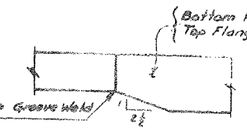

FLANGE THICKNESS TAPER
Not to Scale

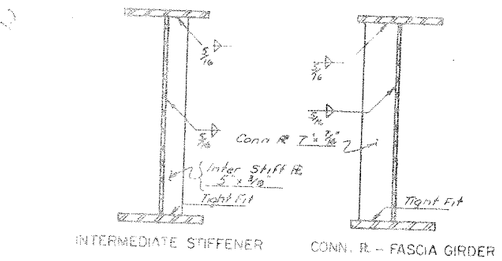

INTERMEDIATE STIFFENER CONN. PL. - FASCIA GIRDER

DESIGN LOAD TABLE/GIRDER

	UNIT	LOAD/FT G1	LOAD/FT G2 Thru G5
D.L.	Slab & Haunch	0.985 K/Ft	1.023 K/Ft
	Girder	0.253 K/Ft	0.245 K/Ft
	S.I.P. Forms	0.062 K/Ft	0.125 K/Ft
	Diaphragms	0.025 K/Ft	0.040 K/Ft
S.D.L.	Traffic Barriers	0.200 K/Ft	0.200 K/Ft
	Future W.S.	0.158 K/Ft	0.158 K/Ft
	Noise Barrier	0.266 K/Ft	—

Assumed Live Load = HS20-44

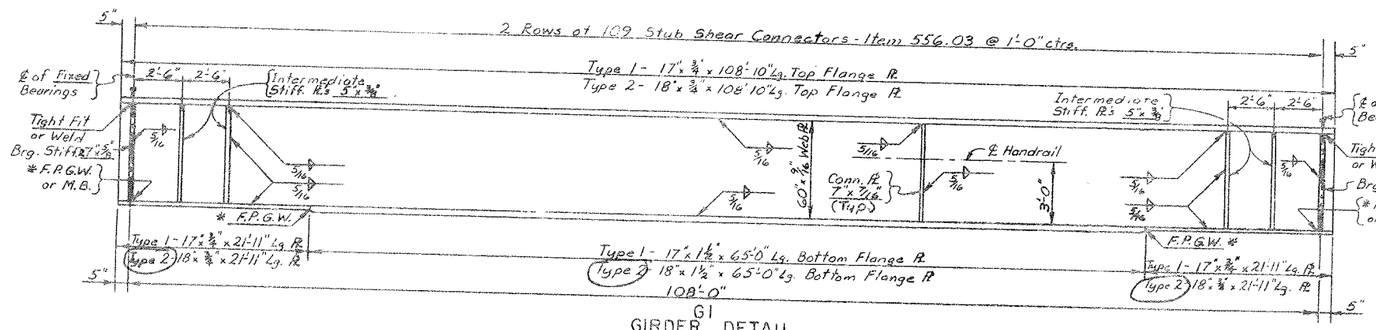

G1
GIRDER DETAIL
Not to Scale

~~TYPE 2 ON RT FASCIA ONLY~~
~~(NOISE WALL FASCIA)~~
WHY CROSSED OFF?
SEEMS RIGHT.

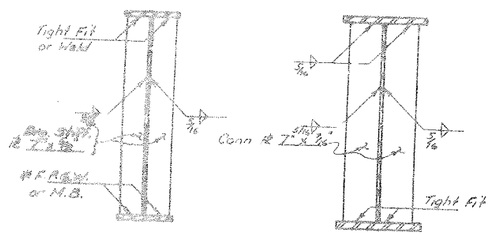

BRG. STIFF. CONN. PL. - INTERIOR GIRDER
GIRDER SECTIONS

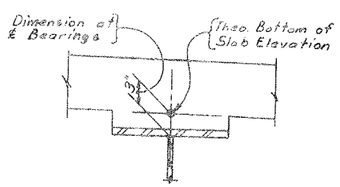

GIRDER HAUNCH DETAIL
Scale: 1" = 1'-0"

CAMBER NOTES

1. The camber labeled "Vertical Curve" in the table is the camber required to follow the vertical curve.
2. The camber labeled "Steel D.L." in the table is the camber required to offset the deflection due to the dead load weight of the girder as fabricated.
3. The camber labeled "Concrete D.L." in the table is the camber required to offset the deflection due to the dead load weight of the concrete slab.
4. The camber labeled "Superimposed D.L." in the table is the camber required to offset the deflection due to the weight of the traffic barrier, noise barrier and future wearing surface.
5. The total camber is the sum of vertical curve, steel dead load, concrete dead load and superimposed dead load. All camber offsets are measured vertically to the top of web from a straight reference line drawn from the intersection of top of web and centerline of bearing at one end of the girder to the corresponding point at the other end of the girder.
6. Positive numbers in the table are above the straight reference line.
7. Negative numbers in the table are below the straight reference line.
8. The camber offsets are tabulated in decimals of a foot.

Note:
D.L. = Dead Load
S.D.L. = Superimposed Dead Load
L.L. = Live Load
Live Load moments and shears include impact
Moments are expressed as Ft. Kips.
Shears are expressed as Kips.
The ends of all girders and the bearing stiffeners shall be vertical. All connection plates and intermediate stiffeners may be perpendicular to the top flange.
For Stud Shear Connector, Drip Bars, Bottom Flange Taper and Safety Handrail Details see Dwg 5 of Common Structure Details.
Drip Bars shall be used on the east end of the fascia girders.

HAUNCH TABLE

		℄ BRG	0.1L	0.2L	0.3L	0.4L	0.5L	0.6L	0.7L	0.8L	0.9L	℄ BRG
G1	(A) Req'd bottom of slab elev.	423.07	423.11	423.15	423.19	423.22	423.25	423.28	423.30	423.32	423.33	423.35
	(B) Top of steel elev. (field meas.)											
	(C) = (A) - (B)											
	(D) Conc. + S.D.L. Deflection	0.00	0.11	0.20	0.26	0.29	0.31	0.29	0.26	0.20	0.11	0.00
	(E) Depth of haunch = (C)+(D) ft.											
G2	(A) Req'd bottom of slab elev.	423.28	423.32	423.36	423.39	423.42	423.45	423.48	423.50	423.51	423.53	423.54
	(B) Top of steel elev. (field meas.)											
	(C) = (A) - (B)											
	(D) Conc. + S.D.L. Deflection	0.00	0.10	0.18	0.24	0.27	0.29	0.27	0.24	0.18	0.10	0.00
	(E) Depth of haunch = (C)+(D) ft.											
G3	(A) Req'd bottom of slab elev.	423.48	423.52	423.56	423.59	423.62	423.65	423.67	423.69	423.71	423.73	423.74
	(B) Top of steel elev. (field meas.)											
	(C) = (A) - (B)											
	(D) Conc. + S.D.L. Deflection	0.00	0.10	0.18	0.24	0.27	0.29	0.27	0.24	0.18	0.10	0.00
	(E) Depth of haunch = (C)+(D) ft.											
G4	(A) Req'd bottom of slab elev.	423.68	423.72	423.76	423.79	423.82	423.85	423.87	423.89	423.91	423.92	423.93
	(B) Top of steel elev. (field meas.)											
	(C) = (A) - (B)											
	(D) Conc. + S.D.L. Deflection	0.00	0.10	0.18	0.24	0.27	0.29	0.27	0.24	0.18	0.10	0.00
	(E) Depth of haunch = (C)+(D) ft.											
G5	(A) Req'd bottom of slab elev.	423.72	423.76	423.80	423.83	423.86	423.89	423.91	423.93	423.94	423.95	423.96
	(B) Top of steel elev. (field meas.)											
	(C) = (A) - (B)											
	(D) Conc. + S.D.L. Deflection	0.00	0.10	0.18	0.24	0.27	0.29	0.27	0.24	0.18	0.10	0.00
	(E) Depth of haunch = (C)+(D) ft.											

CAMBER TABLE (FT.)

		℄ BRG	0.1L	0.2L	0.3L	0.4L	0.5L	0.6L	0.7L	0.8L	0.9L	℄ BRG
G1	(I) Steel D.L.	0.000	0.020	0.035	0.046	0.059	0.055	0.053	0.046	0.035	0.020	0.000
	(II) Conc. D.L.	0.000	0.082	0.147	0.192	0.220	0.229	0.220	0.192	0.147	0.082	0.000
	(III) S.D.L.	0.000	0.027	0.049	0.064	0.073	0.076	0.073	0.064	0.049	0.027	0.000
	(IV) Vertical Curve	0.000	0.015	0.027	0.035	0.040	0.042	0.040	0.035	0.027	0.015	0.000
	Total (I)+(II)+(III)+(IV)	0.000	0.144	0.258	0.337	0.386	0.402	0.386	0.337	0.258	0.144	0.000
G2 Thru G5	(I) Steel D.L.	0.000	0.020	0.035	0.046	0.053	0.055	0.053	0.046	0.035	0.020	0.000
	(II) Conc. D.L.	0.000	0.086	0.153	0.201	0.229	0.239	0.229	0.201	0.153	0.086	0.000
	(III) S.D.L.	0.000	0.017	0.029	0.039	0.044	0.046	0.044	0.039	0.029	0.017	0.000
	(IV) Vertical Curve	0.000	0.015	0.027	0.035	0.040	0.042	0.040	0.035	0.027	0.015	0.000
	Total (I)+(II)+(III)+(IV)	0.000	0.138	0.244	0.321	0.366	0.382	0.366	0.321	0.244	0.138	0.000

All Structural Steel shall conform to A.S.T.M. A588 unless otherwise noted

STATE OF NEW YORK
DEPARTMENT OF TRANSPORTATION
BUREAU OF CONSTRUCTION

BRIDGE NO. 9 OVER TOTMAN RD.

GIRDER DETAILS

DETAILED BY ____ DESIGN CHECKED BY ____ DETAILED BY ____ DESIGN CHECKED BY ____

3/3 1072781

D259214

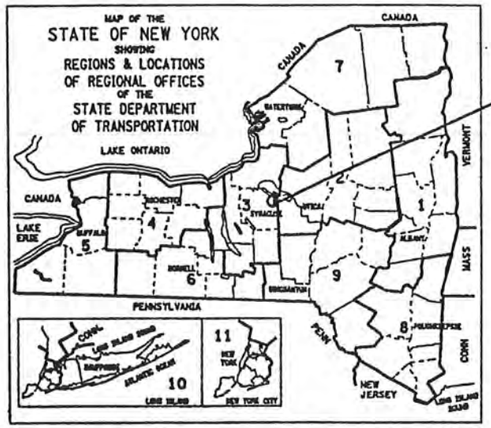

PROJECT LOCATION

THIS IS A BRIDGE REHABILITATION PROJECT ON VARIOUS BRIDGES ON INTERSTATE 481, LOCATED IN THE TOWNS OF CICERO AND DEWITT IN ONONDAGA COUNTY. THIS WORK CONSISTS OF BRIDGE JOINTS, BEARINGS, BRIDGE RAIL AND CONCRETE REPAIR OF SUBSTRUCTURES. THERE ARE 28 BRIDGES IN THE PROJECT BEGINNING AT REFERENCE MARKER 481I-3301-1000 SOUTH OF THE CITY OF SYRACUSE AND ENDING AT REFERENCE MARKER 481I-3301-2143. I481 INTERCHANGE NORTH OF THE CITY.

STATE OF NEW YORK
DEPARTMENT OF TRANSPORTATION
OFFICE OF ENGINEERING

BRIDGE REHABILITATION PROJECT (ELEMENT SPECIFIC)
VARIOUS BRIDGES ON INTERSTATE 481
TOWNS OF DEWITT AND CICERO

VOLUME 1 OF 2

432 SHEETS ONONDAGA COUNTY CONTRACT D259214

F.A. PROJECT

STANDARD SHEETS

M203-4, M203-5, M203-6R1, M603-1
M606-32, M606-33, M606-34,
M619-3R1, M619-4, M619-5
M685-1, M685-2R1, M685-3R1
M685-4R1, M685-5R1, M403-1, M203-4,
M203-5, M203-6R1, M603-1

BTO 9/1/04
06/29/06
03/15/08
HR 5/1/10
DJ Hann 5/15/12

ALL WORK CONTEMPLATED UNDER THIS CONTRACT IS TO BE COVERED BY AND IN CONFORMITY WITH THE STANDARD SPECIFICATIONS (METRIC UNITS) OF JANUARY 2, 2002, AS AMENDED BY ADDENDA NOS. 1 AND 2, EXCEPT AS MODIFIED ON THESE PLANS AND IN THE ITEMIZED PROPOSAL.

CONTRACTOR'S NAME _____
AWARD DATE _____
COMPLETION DATE _____
FINAL ACCEPTANCE DATE _____
REGIONAL DIRECTOR _____
ENGINEER IN CHARGE _____
FINAL COST TOTAL _____

FISCAL SHARE COST(S)

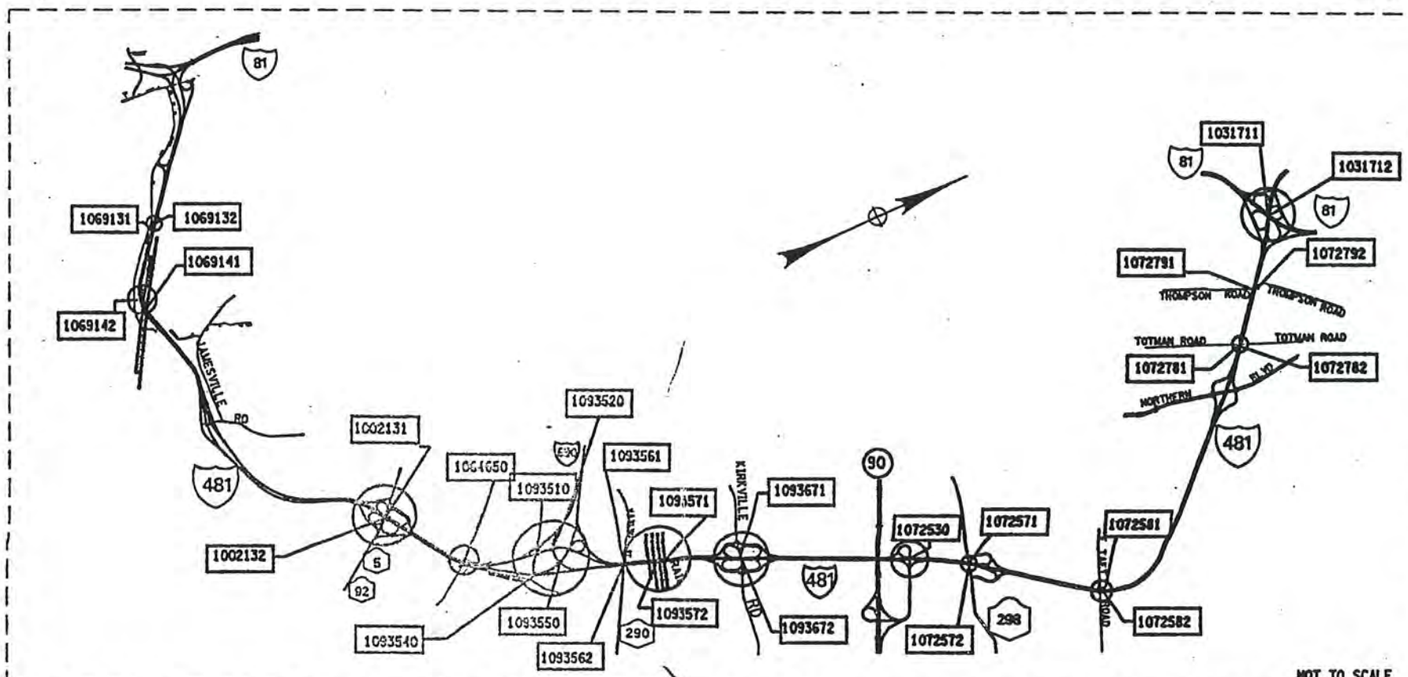

NOT TO SCALE

PROJECT LOCATION

BRIDGE REHAB. PROJ.- ELEMENT SPECIFIC			
VARIOUS BRIDGES ON INTERSTATE 481			
TOWNS OF DEWITT AND CICERO			
ONONDAGA COUNTY			
FED. ROAD REG. NO.	STATE	SHEET NO.	TOTAL SHEETS
1	N.Y.	1	432
FEDERAL AID PROJECT NO.			
CAPITAL PROJECT IDENTIFICATION NO. 3056.13			
INDEX ON SHEET NO. 5 & 6			

RECOMMENDED BY John E Fritz 9/04/02
REGIONAL DESIGN ENGINEER DATE

RECOMMENDED BY Myron A. Quirk 9/4/02
REGIONAL CONSTRUCTION ENGINEER DATE

RECOMMENDED BY 9/04/02
REGIONAL TRANSPORTATION MAINTENANCE/ ENGINEER DATE

RECOMMENDED BY 9-4-02
REGIONAL TRAFFIC ENGINEER DATE

APPROVED BY 09-04-02
REGIONAL DIRECTOR DATE

DESIGN SUPERVISOR Clarence J. Schmitt JOB MANAGER Nick DeCicco DESIGNED BY Alex Kuchinsky CHECKED BY Chris Spiro ESTIMATED BY Mark Wey DRAFTED BY Chris Spiro CHECKED BY

FED ROAD REG. NO.	STATE	CONTRACT NO.	SHEET NO.	TOTAL SHEETS
1	N.Y.	D259214	5	432

BRIDGE REHABILITATION PROJECT (ELEMENT SPECIFIC)
VARIOUS BRIDGES ON INTERSTATE 481
TOWNS OF DEWITT AND CICERO
ONONDAGA COUNTY
P.I.N. 305613 B.I.N. ALL BINS

INDEX

SHEET NO.	DESCRIPTION	DRAWING NO.
1	TITLE SHEET	COVER
2,3,4	ESTIMATE OF QUANTITIES	
5,6	INDEX	IDX-1 - IDX-2
7-155	MAINTENANCE AND PROTECTION OF TRAFFIC	MPT-1 - MPT-149
156	CROSSOVER TYPICAL SECTION	CTS-1
157-160	CROSSOVER SURVEY CONTROL DATA	HC-1 - HC-4
161-166	CROSSOVER PLANS	CPL-1 - CPL-6
167-174	CROSSOVER PROFILES	CPR-1 - CPR-8
175-177	CROSSOVER MISC. DETAILS	CMD-1 - CMD-3
178-179	CROSSOVER MISC. TABLES	CMT-1 - CMT-2
180-191	ESTIMATE OF QUANTITIES BY STRUCTURE	QE-1A - QE-4C
192	GENERAL NOTES	GN-1
193	BIN 1002131, I481SB/RT. 5, PLAN AND ELEVATION	GP1-1
194	BIN 1002131, TYPICAL BRIDGE SECTION AND PROFILE	TS1-1
195-197	BIN 1002131, SOUTH ABUTMENT (SB)	AB1-1 - AB1-3
198-199	BIN 1002131, NORTH ABUTMENT (SB), SHEET PILING LAYOUT	AB1-4 - AB1-5
200-201	BIN 1002131 PIER 1 & PIER 2 SB REMOVAL DETAILS	PR1-1 & PR1-2
202	BIN 1002131, PEDESTAL REPLACEMENT	PR1-3
203	BIN 1002131, BOLSTER DETAILS	PR1-4
204	BIN 1002131, ANCHOR BOLT LAYOUT (SB)	PR1-5
205	BIN 1002132, I481NB/RT. 5, PLAN AND ELEVATION	GP2-1
206-207	BIN 1002132, TYPICAL BRIDGE SECTION AND PROFILE, APPROACH SECTION	TS2-1 & TS2-2
208-213	BIN 1002132, SOUTH ABUTMENT (NB)	AB2-1 - AB2-6
214-219	BIN 1002132, NORTH ABUTMENT (NB)	AB2-7 - AB2-12
220-221	BIN 1002132, PIERS (NB)	PR2-1 & PR2-2
222	BIN 1002132, PEDESTAL REPLACEMENT (NB)	PR2-3
223	BIN 1002132, BOLSTER DETAILS (NB)	PR2-4
224	BIN 1002132, ANCHOR BOLT LAYOUT (NB)	PR2-5
225	BIN 1031711 AND 1031712, I-481/I-81, PLAN AND ELEVATION	GP3-1
226	BIN 1031711 & 1031712, TYPICAL BRIDGE SECTION AND PROFILE	TS3-1
227	BIN 1031711, EAST ABUTMENT (SB) PLAN & ELEVATION	AB3-1
228	BIN 1031711, WEST ABUTMENT (SB) PLAN & ELEVATION	AB3-2
229	BIN 1031712, EAST ABUTMENT (NB) PLAN & ELEVATION	AB3-3
230	BIN 1031712, WEST ABUTMENT (NB) PLAN & ELEVATION	AB3-4
231	BIN 1031711 & 1031712, APPROACH SLABS	AS3-1
232	BIN 1064650, KINNE RD/I-481, PLAN, ELEVATION, AND BRIDGE SECTION	GP4-1
233	BIN 1069131 & 1069132, I-481/QUARRY DRIVEWAY, PLAN AND ELEVATION	GP5-1
234	BIN 1069131 & 1069132, TYPICAL BRIDGE SECTION AND PROFILE AND BRIDGE SECTION	TS5-1
235	BIN 1069131, WEST ABUTMENT (SB) PLAN & ELEVATION	AB5-1
236	BIN 1069131, EAST ABUTMENT (SB) PLAN & ELEVATION	AB5-2
237	BIN 1069132, EAST ABUTMENT (NB) PLAN & ELEVATION	AB5-3
238-239	BIN 1069141 & 1069142, I-481/NYS + W RAILROAD, GENERAL PLAN AND ELEVATION	GP6-1 - GP6-2
240-241	BIN 1069141 & 1069142, TYPICAL BRIDGE SECTION AND PROFILES	TS6-1 & TS6-2
242	BIN 1069141, WEST ABUTMENT (SB) PLAN & ELEVATION	AB6-1
243	BIN 1069141, EAST ABUTMENT (SB) PLAN & ELEVATION	AB6-2
244	BIN 1069142, WEST ABUTMENT (NB) PLAN & ELEVATION	AB6-3
245	BIN 1069142, EAST ABUTMENT (NB) PLAN & ELEVATION	AB6-4

INDEX (CONTINUED)

SHEET NO.	DESCRIPTION	DRAWING NO.
246	BIN 1072530, RAMP TO I-481/I-481, PLAN, ELEVATION AND BRIDGE SECTION	GP7-1
247-248	BIN 1072530, EAST ABUTMENT	AB7-1 - AB7-2
249	BIN 1072571 & BIN 1072572, I-481/ROUTE 298 PLAN AND ELEVATION AND BRIDGE SECTION	GP8-1
250	BIN 1072571 & BIN 1072572, TYPICAL BRIDGE SECTION AND PROFILE	TS8-1
251	BIN 1072571, SOUTH ABUTMENT (SB) PLAN & ELEVATION	AB8-1
252	BIN 1072571, NORTH ABUTMENT (SB) PLAN & ELEVATION	AB8-2
253	BIN 1072572, SOUTH ABUTMENT (NB) PLAN & ELEVATION	AB8-3
254	BIN 1072581 & BIN 1072582, I-481/TAFT ROAD, PLAN AND ELEVATION	GP9-1
255	BIN 1072581 & 1072582, TYPICAL BRIDGE SECTION AND PROFILE	TS9-1
256-257	BIN 1072581, SOUTH ABUTMENT AND NORTH ABUTMENT (SB)	AB9-1 & AB9-2
258-259	BIN 1072582, SOUTH ABUTMENT AND NORTH ABUTMENT (NB)	AB9-3 & AB9-4
260	BIN 1072781 & BIN 1072782, I-481/TOTMAN ROAD, PLAN, ELEVATION AND BRIDGE SECTION	GP10-1
261	BIN 1072781 & BIN 1072782 TYPICAL BRIDGE SECTION AND PROFILE	TS10-1
262-263	BIN 1072781, EAST ABUTMENT (SB) PLAN & ELEVATION	AB10-1 & AB10-2
264	BIN 1072782, WEST ABUTMENT (NB) PLAN & ELEVATION	AB10-3
265	BIN 1072781, APPROACH SLABS	AS10-1
266	BIN 1072791 & BIN 1072792, I-481/ THOMPSON ROAD, PLAN, ELEVATION AND BRIDGE SECTION	GP11-1
267	BIN 1072791 & BIN 1072792 TYPICAL BRIDGE SECTIONS AND PROFILE	TS11-1
268	BIN 1072791, EAST & WEST ABUTMENTS (SB)	AB11-1
269	BIN 1072791, APPROACH SLAB (SB)	AS11-1
270	BIN 1093510, I-690 RAMP/ I-481SB, PLAN, ELEVATION, AND BRIDGE SECTION	GP12-1
271	BIN 1093510, WEST ABUTMENT PLAN & ELEVATION	AB12-1
272	BIN 1093520, WN LINE OVER INTERSTATE 481 SB, PLAN, ELEVATION, AND BRIDGE SECTION	GP13-1
273	BIN 1093520, WEST ABUTMENT PLAN & ELEVATION	AB13-1
274	BIN 1093540, I-690 EB/ I-481 NB RAMP, PLAN, ELEVATION, AND BRIDGE SECTION	GP14-1
275	BIN 1093540 TYPICAL BRIDGE SECTION AND PROFILE	TS14-1
276	BIN 1093540, WEST ABUTMENT	AB14-1
277	BIN 1093550, I-481 NB/WB CONNECTOR, PLAN, ELEVATION, AND BRIDGE SECTION	GP15-1
278	BIN 1093550, SOUTH ABUTMENT, NB PLAN & ELEVATION	AB15-1
279	BIN 1093550, NORTH ABUTMENT, NB PLAN & ELEVATION	AB15-2
280	BIN 1093561 & 1093562, I-481/ROUTE 290, PLAN, ELEVATION AND BRIDGE SECTION	GP16-1
281	BIN 1093561 & 1093562 TYPICAL BRIDGE SECTION AND PROFILE	TS16-1
282	BIN 1093561, SOUTH ABUTMENT (SB) PLAN & ELEVATION	AB16-1
283	BIN 1093562, SOUTH ABUTMENT (NB) PLAN & ELEVATION	AB16-2
284-287	BIN 1093571 & BIN 1093572, I-481/CSX RAILROAD YARD, PLAN & ELEVATION	GP17-1 - GP17-4
288	BIN 1093571 AND BIN 1093572, TYPICAL BRIDGE SECTION AND PROFILES	TS17-1
289-293	BIN 1093571 AND BIN 1093672, DRAINAGE DETAILS	DD17-1 - DD17-5
294-296	BIN 1093571 AND BIN 1093672, SCUPPER EXTENSIONS	DD17-6 - DD17-8
297-314	BIN 1093571, PIERS 1-14, (SB)	PR17-1S - PR17-18S
315	BIN 1093572, SOUTH ABUTMENT (NB)	AB17-1
316-329	BIN 1093572, PIERS 1-14 (NB)	PR17-1N - PR17-14N
330-331	BIN 1093571 AND 1093572, PARAPET REPAIR DETAILS	PW17-1 & PW17-2
332	BIN 1093572, BRIDGE DECK REPAIRS	DR17-1

ALL DIMENSIONS ARE IN m UNLESS OTHERWISE NOTED

AS BUILT REVISIONS

SIGNATURE DATE

INTERSTATE 481
REHABILITATION PROJECT

INDEX

STATE OF NEW YORK
DEPARTMENT OF TRANSPORTATION

FILENAME	REGION	DATE	DRAWING NO.
305613AA.L2A	3	10/02	IDX-1

DESIGN COMPUTATIONS ESTIMATED BY CHECKED BY DRAFTED BY CHECKED BY DESIGNED BY

FED ROAD REG. NO.	STATE	CONTRACT NO.	SHEET NO.	TOTAL SHEETS
1	N.Y.	D259214	6	432

BRIDGE REHABILITATION PROJECT (ELEMENT SPECIFIC)
VARIOUS BRIDGE ON INTERSTATE 481
TOWN OF DEWITT AND CICERO
ONONDAGA COUNTY
P.I.N. 305613 B.I.N. VARIOUS

INDEX (CONTINUED)

SHEET NO.	DESCRIPTION	DRAWING NO.
333	BIN 1093671 & 1093672, I-481/KIRKVILLE ROAD, PLAN, ELEVATION AND BRIDGE SECTION	GP18-1
334	BIN 1093671 & BIN 1093672 TYPICAL BRIDGE SECTION AND PROFILE	TS18-1
335-336	BIN 1093671, SOUTH ABUTMENT (SB) PLAN, ELEVATION AND SECTIONS	AB18-1 - AB18-2
337	BIN 1093671, NORTH ABUTMENT (SB) PLAN & ELEVATION	AB18-3
338-339	BIN 1093672, SOUTH ABUTMENT (NB) PLAN, ELEVATION AND SECTIONS	AB18-4 - AB18-5
340	BIN 1093672, NORTH ABUTMENT (NB) PLAN & ELEVATION	AB18-6
341-342	BIN 1002131, BIN 1002132 & BIN 1093571, MULTIROTATIONAL BEARINGS	BR-1 & BR-2
343	BIN 1002131, BEARING RESTORATION DETAILS	BR-3
344	BINS 1069131 & 1069132, BEARING RESTORATION DETAILS	BR-4
345-346	BIN 1069141 & BIN 1069142, BEARING RESTORATION DETAIL	BR-5 & BR-6
347	BIN 1072530, BEARING RESTORATION DETAILS	BR-7
348	BIN 1072791 AND BIN 1072792 BEARING RESTORATION DETAILS	BR-8
349	BIN 1093550, BEARING RESTORATION DETAILS	BR-9
350-351	BINS 1093751 & 1093572, BEARING RESTORATION DETAILS	BR-10 & BR-11
352	BIN 1072781 BEARING RESTORATION DETAILS	BR-12
	RAILING DETAILS	
353-355	BIN 1002131 & BIN 1002132, RAILING DETAILS	RD-1 - RD-3
356-358	BIN 1069141 & BIN 1069142, RAILING DETAILS	RD-4 - RD-6
359-360	RAILING DETAILS	RD-7 - RD-8
	BRIDGE JOINTS	
361-364	BRIDGE JOINT TABLE	JT-1 - JT-4
365	COMPRESSION SEAL JOINT DETAIL (ALL BRIDGES)	JD-1
366-370	BIN 1002131, JOINT DETAILS	JD-2 - JD-6
371-375	BIN 1002132, JOINT DETAILS	JD-7 - JD-11
376-377	BIN 1031711 & BIN 1031712, JOINT DETAILS	JD-12 - JD-13
378-383	BIN 1064650, JOINT DETAILS	JD-14 - JD-19
384-385	BIN 1069131, JOINT DETAILS	JD-20 + JD-21
386-387	BIN 1069132, JOINT DETAILS	JD-22 + JD-23
388-392	BIN 1069141 & BIN 1069142	JD-24 - JD-28
393-394	BIN 1072530, JOINT DETAILS	JD-29 + JD-30
395-396	BIN 1072571, JOINT DETAILS	JD-31 + JD-32
397-398	BIN 1072572, JOINT DETAILS	JD-33 + JD-34
399-400	BIN 1072581, JOINT DETAILS	JD-35 + JD-36
401-402	BIN 1072582, JOINT DETAILS	JD-37 + JD-38
403-404	BIN 1072781, JOINT DETAILS	JD-39 + JD-40
405-406	BIN 1072782, JOINT DETAILS	JD-41 + JD-42
407-408	BIN 1072792, JOINT DETAILS	JD-43 + JD-44
409-410	BIN 1093510, JOINT DETAILS	JD-45 + JD-46
411	BIN 1072791, BIN 1093520 & BIN 1093540, JOINT DETAILS	JD-47
412-413	BIN 1093550, JOINT DETAILS	JD-48 + JD-49
414-416	BIN 1093561 & BIN 1093562, JOINT DETAILS	JD-50 - JD-52
417-420	BIN 1093571 & BIN 1093572, JOINT DETAILS	JD-53 - JD-56
421-423	BIN 1093671 & BIN 1093672, JOINT DETAILS	JF-57 - JD-59

INDEX (CONTINUED)

SHEET NO.	DESCRIPTION	DRAWING NO.
424	VARIOUS BRIDGES - ROAD PLATE DETAIL	AA - RP1
	BAR LIST	
425-428	ALL BINS (BRIDGE JOINT SYSTEMS)	BL-1 - BL-4
429	BIN 1002131 & 1002132	BL-5
430	BIN 1093571	BL-6
431	STRUCTURAL SLAB OVERLAY & ASPHALT PAVEMENT REPAIR DETAILS	MS-1
432	MISC. TABLE	MT-1

ALL DIMENSIONS ARE IN m UNLESS OTHERWISE NOTED

AS BUILT REVISIONS

SIGNATURE DATE

INTERSTATE 481
REHABILITATION PROJECT

INDEX

STATE OF NEW YORK
DEPARTMENT OF TRANSPORTATION

FILENAME	REGION	DATE	DRAWING NO.
305613AAL2A	3	10/02	IDX-2

CHECKED BY ____ DRAFTED BY ____ ESTIMATED BY ____ DESIGNED BY ____

FED ROAD REG. NO.	STATE	CONTRACT NO.	SHEET NO.	TOTAL SHEETS
1	N.Y.	D259214	186	432

BRIDGE REHABILITATION PROJECT (ELEMENT SPECIFIC)
VARIOUS BRIDGES ON INTERSTATE 481
TOWNS OF DEWITT AND CICERO
ONONDAGA COUNTY
P.I.N. 305613 B.I.N. VARIOUS

ESTIMATE OF QUANTITIES BY STRUCTURE

ITEM #	DESCRIPTION	UNIT	1072781		1072782		1072791		1072792		1093510		1093520		1093540	
			EST.	FINAL	EST.	FINAL	EST.	FINAL	EST.	FINAL	EST.	FINAL	EST.	FINAL	EST.	FINAL
203.02 M	UNCLASSIFIED EXCAVATION & DISPOSAL	CM	2		—		2		—		—		—		—	
203.03 M	EMBANKMENT IN PLACE	CM	—		—		—		—		—		—		—	
203.07 M	SELECT GRANULAR FILL	CM	—		—		—		—		—		—		—	
203.1770 M	CLEAN EXISTING PIPE CULVERT	M	—		—		—		—		—		—		—	
203.18 M	CLEANING CLOSED DRAINAGE SYSTEMS	M	—		—		—		—		—		—		—	
203.19 M	CLEAN DRAINAGE STRUCTURES AND MANHOLES	EA	—		—		—		—		—		—		—	
203.21 M	SELECT STRUCTURE FILL	CM	—		—		—		—		—		—		—	
15203.51 M	GRADING, CLEANING AND RESHAPING EXISTING DITCHES	M	—		—		—		—		—		—		—	
206.01 M	STRUCTURE EXCAVATION	CM	—		—		—		—		—		—		—	
206.02 M	TRENCH AND CULVERT EXCAVATION	CM	—		—		—		—		—		—		—	
207.10 M	GEOTEXTILE BEDDING	SM	—		—		—		—		—		—		—	
210.5433 M	REMOVAL AND DISPOSAL OF ASBESTOS CONTAINING CAULKING (BV 12)	LS	—		—		—		—		—		—		—	
210.9913 M	REMOVAL AND DISPOSAL OF MISC. ASBESTOS CONTAINING MATERIAL BV-12	LS	—		—		—		—		—		NEC		—	
304.15 M	SUBBASE COURSE, OPTIONAL TYPE	CM	—		—		—		—		—		—		—	
402.128201 M	12.5mm F2 SUPERPAVE HMA, 80 SERIES COMPACTION	MT	3		—		3		—		3		—		—	
402.128211 M	PLANT PRODUCTION QUALITY ADJUSTMENT TO ITEM 402.128201M	QU	1		—		1		—		1		—		—	
402.258901 M	25mm F9 SUPERPAVE HMA, 80 SERIES COMPACTION	MT	—		—		—		—		4		—		—	
402.258911 M	PLANT PRODUCTION QUALITY ADJUSTMENT TO 402.258901M	QU	—		—		—		—		1		—		—	
402.378901 M	37.5mm, F9 SUPERPAVE HMA, 80 SERIES COMPACTION	MT	—		—		—		—		—		—		—	
402.378911 M	PLANT PRODUCTION QUALITY ADJUSTMENT TO 402.378901M	QU	—		—		—		—		—		—		—	
407.01 M	TACK COAT	L	5		—		5		—		9		—		—	
490.30 M	MISC. COLD MILLING OF BITUMINUS CONCRETE	SM	—		—		—		—		25		—		—	
502.92 M	SEALING TRANSVERSE JOINTS	M	—		—		—		—		—		21		21	
08520.5014 M	SAWCUT, ASPH, CONC/ASPH, OVERLAY- PCC PAVE	M	74		—		48		—		17		—		—	
552.13 M	TEMPORARY STEEL SHEETING	SM	—		—		—		—		—		—		—	
555.0105 M	CONCRETE FOR STRUCTURES - CLASS A	CM	1		—		—		—		—		—		—	
555.09 M	CONCRETE FOR STRUCTURES, CLASS HP	CM	3		1		—		1		1		—		—	
18555.81 M	STRUCTURAL CRACK SEALING	LM	6		—		—		—		—		—		—	
556.0201 M	UNCOATED BAR REINFORCEMENT FOR CONCRETE STRUCTURES	KG	—		—		—		—		—		—		—	
556.0202 M	EPOXY COATED REBAR FOR STRUCTURES	KG	70		72		—		71		52		—		—	
558.01 M	TRANSVERSE SAWCUT GROOVING OF STR SLAB SURF	SM	18		—		17		—		—		—		—	
18559.1696 M	PROTECTIVE SEALER STRUCTURAL CONCRETE	SM	—		—		—		—		—		—		—	
18559.1896 M	PROT SEAL STR. CONC. - NEW BRIDGE DECK OVERLAYS	SM	—		—		—		—		—		—		—	
564.0501 M	STRUCTURAL STEEL	LS	—		—		—		—		—		—		—	
565.1522 M	TYPE M.R. EXPANSION BEARING (1001 TO 2000 KN)	EA	—		—		—		—		—		—		—	
565.1722 M	TYPE M.R. FIXED BEARING (1001 TO 2000 KN)	EA	—		—		—		—		—		—		—	
15565.4302 M	BRIDGE BEARING RESTORATION	EA	10		—		10		10		—		—		—	
566.01 M	MODULAR EXPANSION JOINT SYSTEM, ONE-CELL	M	—		—		—		—		—		—		—	
566.02 M	MODULAR EXPANSION JOINT SYSTEM TWO-CELL	M	—		—		—		—		—		—		—	
567.31 M	ARM JNT SYS WI COMPRESSION SEAL - TY A1	M	13		13		—		14		—		—		—	
567.32 M	ARM JNT SYS WI COMPRESSION SEAL - TY A2	M	—		—		—		—		—		—		—	
567.35 M	ARM JNT SYS WI COMPRESSION SEAL - TY A5	M	13		13		—		14		—		—		—	
567.36 M	ARM JNT SYS WI COMPRESSION SEAL - TY A6	M	—		—		—		—		—		—		—	
18567.46 M	ELASTOMERIC CONCRETE FOR BRIDGE JOINT SYSTEMS	M	—		26		—		26		—		—		—	
16567.640001 M	REPLACE COMPRESSION SEAL IN EXISTING BRIDGE JOINTS	M	—		—		28		—		18		10		10	
568.32 M	CEMENT MORTAR PADS	EA	—		—		—		—		—		—		—	
568.50 M	STEEL BRIDGE RAILING (2 RAIL)	M	—		—		—		—		—		—		—	
570.090001 M	ENVIRONMENTAL GROUND PROTECTION	LS	—		—		—		—		—		—		—	
570.090002 M	ENVIRONMENTAL GROUND PROTECTION	LS	—		—		—		—		—		—		—	
570.090003 M	ENVIRONMENTAL GROUND PROTECTION	LS	—		—		—		—		—		—		—	

ALL DIMENSIONS ARE IN m UNLESS OTHERWISE NOTED

AS BUILT REVISIONS

SIGNATURE DATE

SHEET 7 OF 12

ESTIMATE OF QUANTITIES

STATE OF NEW YORK
DEPARTMENT OF TRANSPORTATION

FILENAME	REGION	DATE	DRAWING NO.
305613.L1A	3	10/02	QE-3A

DESIGN SUPERVISOR ____ JOB MANAGER ____ DESIGNED BY ____ CHECKED BY ____ ESTIMATED BY ____ DRAFTED BY ____ CHECKED BY ____

FED ROAD REG. NO.	STATE	CONTRACT NO.	SHEET NO.	TOTAL SHEETS
1	N.Y.	D259214	187	432

BRIDGE REHABILITATION PROJECT (ELEMENT SPECIFIC)
VARIOUS BRIDGES ON INTERSTATE 481
TOWNS OF DEWITT AND CICERO
ONONDAGA COUNTY
P.I.N. 305613 B.I.N. VARIOUS

ESTIMATE OF QUANTITIES BY STRUCTURE

ITEM #	DESCRIPTION	UNIT	1072781		1072782		1072791		1072792		1093510		1093520		1093540	
			EST.	FINAL	EST.	FINAL	EST.	FINAL	EST.	FINAL	EST.	FINAL	EST.	FINAL	EST.	FINAL
570.090004 M	ENVIRONMENTAL GROUND PROTECTION	LS	—		—		—		—		—		—		—	
570.100001 M	ENVIRONMENTAL WATERWAY PROTECTION	LS	—		—		—		—		—		—		—	
570.100002 M	ENVIRONMENTAL WATERWAY PROTECTION	LS	—		—		—		—		—		—		—	
16570.32 M	LOCALIZED PAINTING OF BARE STRUCTURAL STEEL	SM	—		—		—		—		—		—		—	
16570.72 M	LOCALIZED VACUUM CONTAINED CLEANING OF STRUCTURAL STEEL PLANAR SURFACES	SM	—		—		—		—		—		—		—	
16570.76 M	LOCALIZED VACUUM CONTAINED CLEANING OF STRUCTURAL STEEL - IRREGUALR	SM	—		—		—		—		—		—		—	
571.010001 M	TREATMENT AND DISPOSAL OF PAINT REMOVAL WASTE	CM	—		—		—		—		—		—		—	
571.010002 M	TREATMENT AND DISPOSAL OF PAINT REMOVAL WASTE	CM	—		—		—		—		—		—		—	
571.010003 M	TREATMENT AND DISPOSAL OF PAINT REMOVAL WASTE	CM	—		—		—		—		—		—		—	
571.010004 M	TREATMENT AND DISPOSAL OF PAINT REMOVAL WASTE	CM	—		—		—		—		—		—		—	
572.010001 M	STRUCTURAL STEEL PAINT SYSTEM: SHOP APPLIED	SM	—		—		—		—		—		—		—	
572.010002 M	STRUCTURAL STEEL PAINT SYSTEM: SHOP APPLIED	SM	—		—		—		—		—		—		—	
576.2001M	DOWNSPOUT SYSTEM, DUCTILE IRON	M	—		—		—		—		—		—		—	
578.020001 M	OVERLAY CONCRETE - CLASS E	SM	—		—		—		—		—		—		—	
578.020002 M	OVERLAY CONCRETE - CLASS E	SM	—		—		—		—		—		—		—	
578.020003 M	OVERLAY CONCRETE - CLASS E	SM	—		—		—		—		—		—		—	
578.020004 M	OVERLAY CONCRETE - CLASS E	SM	—		—		—		—		—		—		—	
578.020005 M	OVERLAY CONCRETE - CLASS E	SM	—		—		—		—		—		—		—	
578.030001 M	SLAB RECONSTRUCTION CONCRETE - CLASS D OR E	SM	—		—		—		—		—		—		—	
578.030002 M	SLAB RECONSTRUCTION CONCRETE - CLASS D OR E	SM	—		—		—		—		—		—		—	
578.030003 M	SLAB RECONSTRUCTION CONCRETE - CLASS D OR E	SM	—		—		—		—		—		—		—	
578.030004 M	SLAB RECONSTRUCTION CONCRETE - CLASS D OR E	SM	—		—		—		—		—		—		—	
578.030005 M	SLAB RECONSTRUCTION CONCRETE - CLASS D OR E	SM	—		—		—		—		—		—		—	
578.030006 M	SLAB RECONSTRUCTION CONCRETE - CLASS D OR E	SM	18		—		—		—		—		—		—	
578.030007 M	SLAB RECONSTRUCTION CONCRETE - CLASS D OR E	SM	—		—		17		—		—		—		—	
579.02 M	REINFORCING BAR EXPOSURE	SM	26		8		17		8		—		—		—	
580.01 M	REMOVAL OF STRUCTURAL CONCRETE	CM	3		3		—		3		1		—		—	
582.05 M	REMOVE STRUCTURAL CONCRETE WITH CLASS A CONCRETE	CM	1		1		1		—		1		1		2	
582.07 M	REMOVE STRUCTURAL CONCRETE AND REPLACE WITH VERTICAL OVERHEAD PATCH MATERIAL	SM	—		—		—		—		—		—		—	
16584.13 M	RAPID SETTING CONCRETE FOR BRIDGE AND APPROACH SLAB REPAIRS	KG	—		—		—		—		—		—		—	
585.01 M	STRUCTURAL LIFTING OPERATIONS - TYPE A	EA	10		—		10		10		—		—		—	
585.02 M	STRUCTURAL LIFTING OPERATIONS - TYPE B	EA	—		—		—		—		—		—		—	
585.03 M	STRUCTURAL LIFTING OPERATIONS TYPE C	EA	—		—		—		—		—		—		—	
586.01 M	DRILL AND GROUT BOLTS, OR REINFORCING BARS	mm	6000		6000		—		6600		4200		—		—	
17586.18M	DRILLING HOLES IN EXISITING SUBSTRUCTURE	M	—		—		—		—		—		—		—	
16586.200125 M	DRILL AND GROUT ANCHOR BOLTS AND REBAR IN CONCRETE	EA	—		—		—		—		—		—		—	
16586.200216 M	DRILL AND GROUT ANCHOR BOLTS AND REBAR IN CONCRETE	EA	—		—		—		—		—		—		—	
587.01 M	BRIDGE RAILING REMOVAL AND DISPOSAL	M	—		—		—		—		—		—		—	
589.520001 M	REMOVAL OF EXISTING STEEL	EA	—		—		—		—		—		—		—	
589.520002 M	REMOVAL OF EXISTING STEEL	EA	—		—		—		—		—		—		—	
589.520003 M	REMOVAL OF EXISTING STEEL	EA	—		—		—		—		—		—		—	
589.520004 M	REMOVAL OF EXISTING STEEL	EA	—		—		—		—		—		—		—	
589.520005 M	REMOVAL OF EXISTING STEEL	EA	—		—		—		—		—		—		—	
590.01M	VERTICAL ADJUSTMENT OF BRIDGE DRAINAGE DEVICES	EA	—		—		—		—		—		—		—	
603.6001 M	REINFORCED CONCRETE PIPE CLASS III, 300 mm	M	—		—		—		—		—		—		—	
603.7301M	REINFORCED CONCRETE PIPE END SECTION 300 mm DIAMETER	EA	—		—		—		—		—		—		—	

ALL DIMENSIONS ARE IN m UNLESS OTHERWISE NOTED

AS BUILT REVISIONS

SIGNATURE DATE

SHEET 8 OF 12

ESTIMATE OF QUANTITIES

STATE OF NEW YORK
DEPARTMENT OF TRANSPORTATION

FILENAME	REGION	DATE	DRAWING NO.
305613J1A	3	10/02	QE-38

DESIGN SUPERVISOR ____ JOB MANAGER ____ DESIGNED BY ____ CHECKED BY ____ ESTIMATED BY ____ DRAFTED BY ____ CHECKED BY ____

FED ROAD REG. NO.	STATE	CONTRACT NO.	SHEET NO.	TOTAL SHEETS
1	N.Y.	D259214	188	432

BRIDGE REHABILITATION PROJECT (ELEMENT SPECIFIC)
VARIOUS BRIDGES ON INTERSTATE 481
TOWNS OF DEWITT AND CICERO
ONONDAGA COUNTY
P.I.N. 305613 B.I.N. VARIOUS

ESTIMATE OF QUANTITIES BY STRUCTURE

ITEM #	DESCRIPTION	UNIT	1072781		1072782		1072791		1072792		1093510		1093520		1093540	
			EST.	FINAL	EST.	FINAL	EST.	FINAL	EST.	FINAL	EST.	FINAL	EST.	FINAL	EST.	FINAL
605.0901 M	UNDERDRAIN FILTER TYPE 1	CM	—		—		—		—		—		—		—	
605.1702 M	OPT. UNDERDRAIN PIPE 150 mm ø	M	—		—		—		—		—		—		—	
606.8701 M	CORRUGATED BEAM GUIDE RAILING TRANSITION ASSEMBLY, TWO RAIL, STEEL BRIDGE RAILING	EA	—		—		—		—		—		—		—	
16606.80 M	TRANSITION BRIDGE RAILING TO BOX BEAM GUIDE RAIL	M	—		—		—		—		—		—		—	
609.15 M	RESETTING EXISTING CURB	M	—		—		—		—		—		—		—	
610.0203 M	ESTABLISH TURF	SM	—		—		—		—		—		—		—	
612.0205 M	CLASS II TYPE B EROSION CONTROL MATERIAL	SM	—		—		—		—		—		—		—	
08615.0402 M	TREE AND VEGETATION BARRIER	M	—		—		—		—		—		—		—	
620.03 M	STONE FILLING (LIGHT)	CM	—		—		—		—		—		—		—	
625.01 M	SURVEY AND STAKEOUT	LS	—		—		—		—		—		—		—	
637.03 M	CONCRETE CYLINDER CURING BOX	EA	—		—		—		—		—		—		—	
637.0702 M	ENGINEER'S OFFICE TYPE C	MNTH	—		—		—		—		—		—		—	
10637.2101 M	FURN PORTABLE CELLULAR TELEPHONE EQUIP.	LS	—		—		—		—		—		—		—	
08637.3501 M	MICRO COMPUTER SYSTEM	EA	—		—		—		—		—		—		—	
15637.61 M	CPM SCHEDULE	LS	—		—		—		—		—		—		—	
15637.51 M	DIGITAL CAMERA SYSTEM	LS	—		—		—		—		—		—		—	
15637.91 M	CHAMPS MANAGEMENT SYSTEM	LS	—		—		—		—		—		—		—	
15637.98 M	PARTNERING WORKSHOP	LS	—		—		—		—		—		—		—	
640.10 M	WHITE PAINT REFLEC PAVEMENT STRIPES-0.38 mm	M	—		—		—		—		4		—		—	
640.11 M	YELLOW PAINT REFLEC PAVEMENT STRIPES-0.38 mm	M	—		—		—		—		3		—		—	
14646.10 M	MILLED IN AUDIBLE ROWAY DELINS (WIDE)	M	—		—		—		—		—		—		—	
23675.15M	FURNISH AND PLACE STONE BALLAST SURFACING COURSE	MT	—		—		—		—		—		—		—	
91685.0705 M	WHT POLYESTER REFLEC PAVEMENT STRIPE	M	—		—		—		—		4		—		—	
91685.0706 M	YEL POLYESTER REFLEC PAVEMENT STRIPE	M	—		—		—		—		3		—		—	
697.02 M	FIELD CHANGE ORDER	LS	—		—		—		—		—		—		—	
699.040001 M	MOBILIZATION	LS	NEC		NEC		NEC		NEC		NEC		NEC		NEC	

ALL DIMENSIONS ARE IN m UNLESS OTHERWISE NOTED

AS BUILT REVISIONS

SIGNATURE DATE

SHEET 9 OF 12

ESTIMATE OF QUANTITIES

STATE OF NEW YORK
DEPARTMENT OF TRANSPORTATION

FILENAME	REGION	DATE	DRAWING NO.
305613.L1A	3	10/02	QE-3C

DESIGN SUPERVISOR ____ JOB MANAGER ____ DESIGNED BY ____ CHECKED BY ____ ESTIMATED BY ____ DRAFTED BY ____ CHECKED BY ____

FED ROAD REG. NO.	STATE	CONTRACT NO.	SHEET NO.	TOTAL SHEETS
1	N.Y.	D259214	260	432

BRIDGE REHABILITATION PROJECT (ELEMENT SPECIFIC)
VARIOUS BRIDGES ON INTERSTATE 481
TOWNS OF DEWITT AND CICERO
ONONDAGA COUNTY
P.I.N. 305613 | B.I.N. 1072781 & 1072782

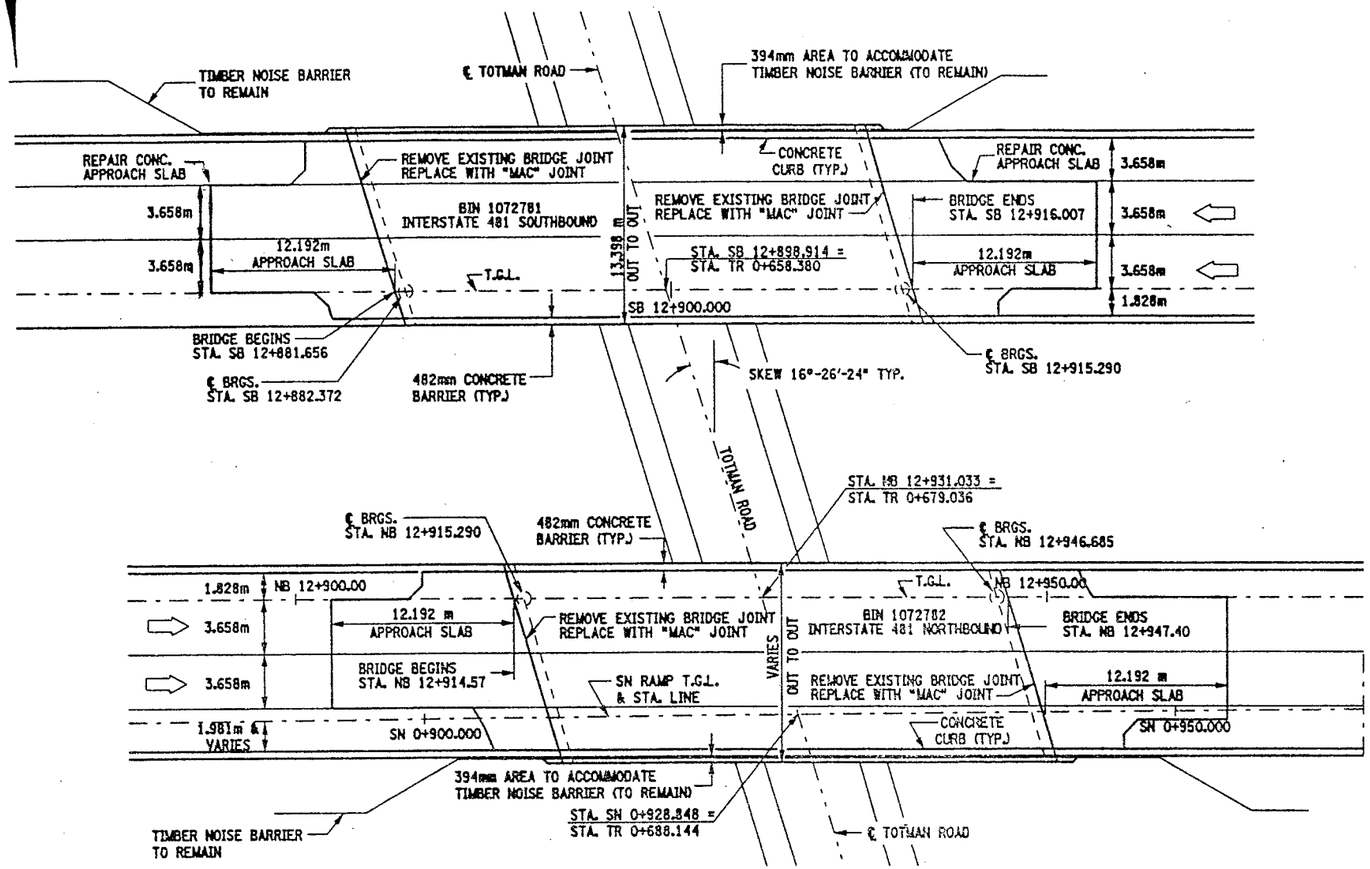

PLAN VIEW
SCALE: 1:200

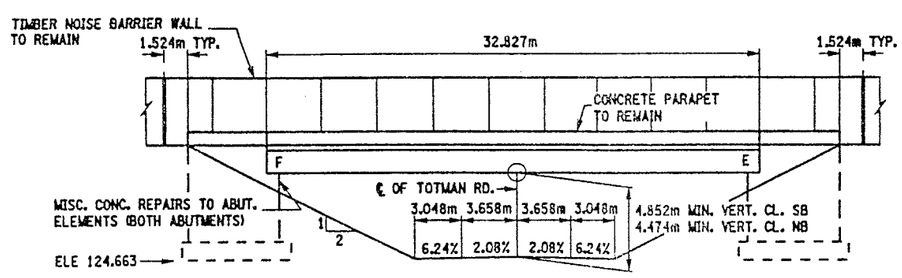

ELEVATION
SCALE: 1:200

NB SHOWN, SB SIMILAR

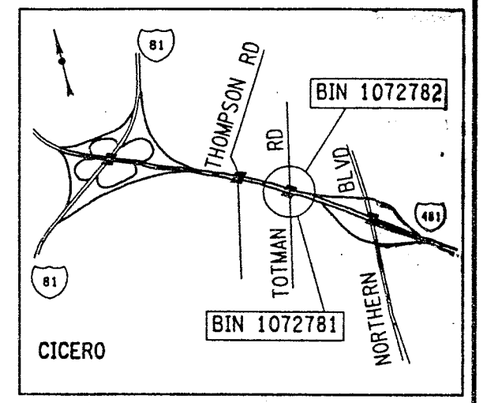

LOCATION MAP
NOT TO SCALE

WORK TO BE DONE (NOT NECESSARILY IN THIS ORDER):

BIN 1072781:

1. ESTABLISH MP&T SCHEME FOR STAGE CONSTRUCTION.
2. REPAIR CONCRETE APPROACH SLAB.
3. REMOVE EXISITING BRIDGE JOINTS.
4. PLACE NEW BRIDGE JOINTS, ("MAC" JOINTS).
5. PERFORM MISCELLANEOUS REPAIRS TO CONCRETE ELEMENTS AT ABUTMENTS.

BIN 1072782:

1. ESTABLISH MP&T SCHEME FOR STAGE CONSTRUCTION.
2. REMOVE EXISITING BRIDGE JOINTS.
3. PLACE NEW BRIDGE JOINTS, ("MAC" JOINTS).
4. PERFORM MISCELLANEOUS REPAIRS TO CONCRETE ELEMENTS AT ABUTMENTS.

NOTE:

"MAC" JOINT - MODIFIED ARMORED JOINT SYSTEM WITH COMPRESSION SEAL.

BIN 1072781 SOUTHBOUND
BIN 1072782 NORTHBOUND

ALL DIMENSIONS ARE IN m UNLESS OTHERWISE NOTED

AS BUILT REVISIONS

SIGNATURE | DATE

INTERSTATE 481
OVER
TOTMAN ROAD

PLAN, ELEVATION AND BRIDGE SECTION

STATE OF NEW YORK
DEPARTMENT OF TRANSPORTATION

FILENAME	REGION	DATE	DRAWING NO.
305613AB.G1A	3	10/02	GP10-1

DESIGN SUPERVISOR ____ JOB MANAGER ____ DESIGNED BY ____ CHECKED BY ____ ESTIMATED BY ____ DRAFTED BY ____ CHECKED BY ____

FED ROAD REG. NO.	STATE	CONTRACT NO.	SHEET NO.	TOTAL SHEETS
1	N.Y.	D259214	261	432

BRIDGE REHABILITATION PROJECT (ELEMENT SPECIFIC)
VARIOUS BRIDGES ON INTERSTATE 481
TOWNS OF DEWITT AND CICERO
ONONDAGA COUNTY
P.I.N. 305613 | B.I.N. 1072781 & 1072782

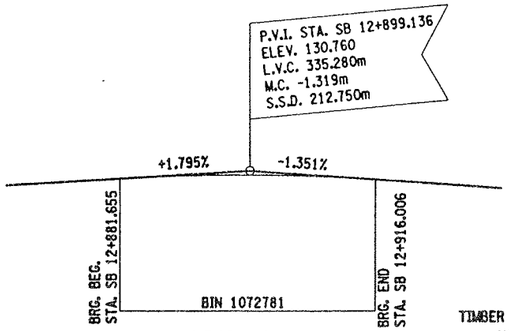

PROFILE
NOT TO SCALE

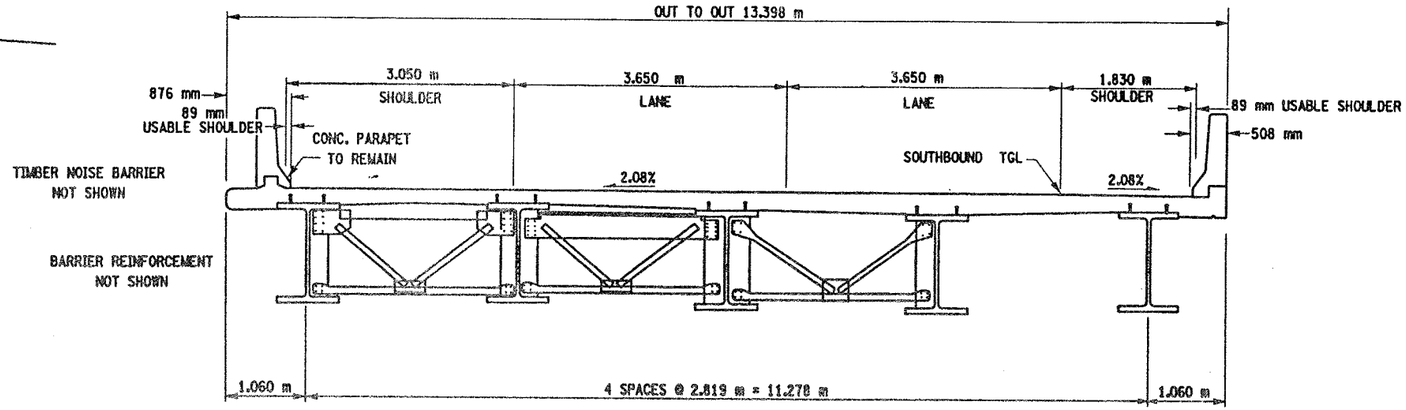

BRIDGE SECTION
BIN 1072781
NOT TO SCALE

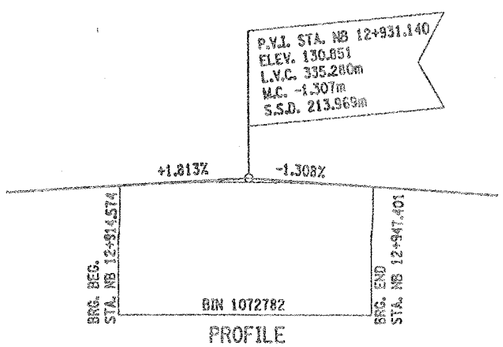

PROFILE
NOT TO SCALE

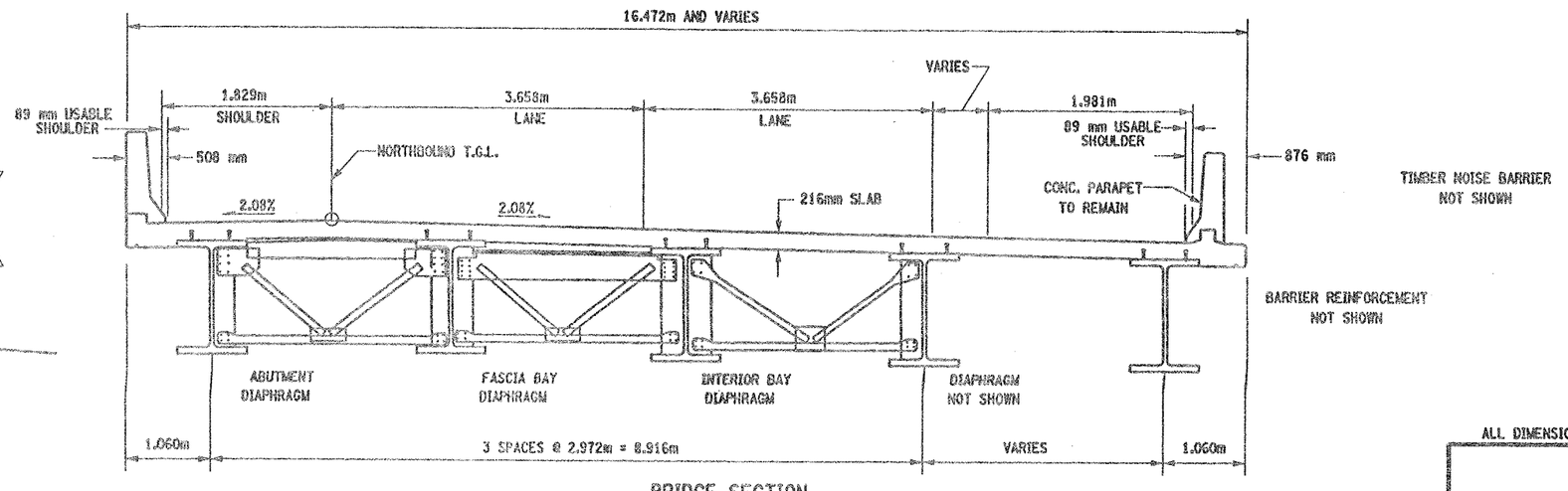

BRIDGE SECTION
BIN 1072782
NOT TO SCALE

NOTES:

TIMBER NOISE BARRIER WALL IS ATTACHED TO NORTH FASCIA ON BIN 1072782 NB AND TO THE SOUTH FASCIA ON BIN 1072781 SB.

ALL DIMENSIONS ARE IN m UNLESS OTHERWISE NOTED

AS BUILT REVISIONS

SIGNATURE | DATE

INTERSTATE 481
OVER
TOTMAN ROAD

TYPICAL BRIDGE SECTION AND PROFILE

STATE OF NEW YORK
DEPARTMENT OF TRANSPORTATION

FILENAME	REGION	DATE	DRAWING NO.
305613AB.G1A	3	10/02	TS10-1

DESIGN SUPERVISOR ____ JOB MANAGER ____ DESIGNED BY ____ CHECKED BY ____ ESTIMATED BY ____ DRAFTED BY ____ CHECKED BY ____

FED ROAD REG. NO.	STATE	CONTRACT NO.	SHEET NO.	TOTAL SHEETS
1	N.Y.	D259214	262	432

BRIDGE REHABILITATION PROJECT (ELEMENT SPECIFIC)
VARIOUS BRIDGES ON INTERSTATE 481
TOWNS OF DEWITT AND CICERO
ONONDAGA COUNTY
P.I.N. 305613 B.I.N. 1072781

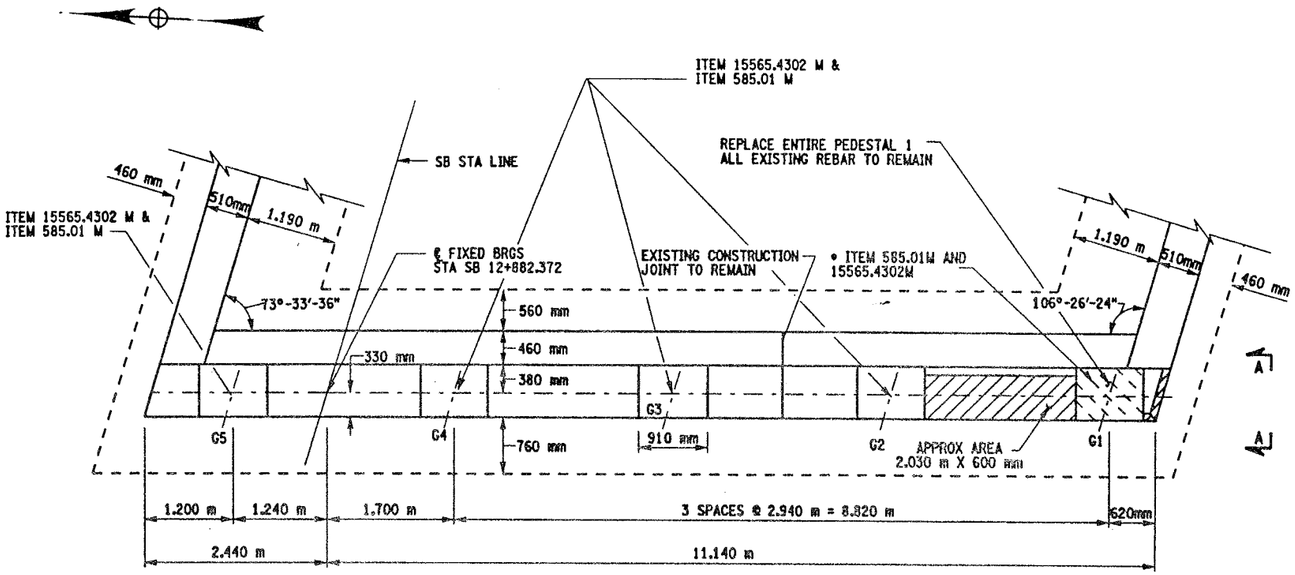

EAST ABUTMENT PLAN

SCALE 1:40

• PERFORM STRUCTURAL LIFTING UNDER ITEM 585.01M - STRUCTURAL LIFTING OPERATIONS TYPE A (LIFTING AT AN ABUTMENT).

JACKING LOADS

DL = 50 MT
LL = 50 MT
TOTAL = 100 MT

NOTES:

1. ALL DIMENSIONS SHOWN FOR CONCRETE REMOVAL ARE APPROXIMATE AND SHALL BE FIELD VERIFIED BY THE CONTRACTOR AND E.I.C.
2. REMOVE CONCRETE TO LIMITS SHOWN AS WELL AS TO SOUND CONCRETE, A.O.B.E.
3. WHEN REMOVING EXISTING CONCRETE, SAWCUT 5 mm MIN. TO PRODUCE NEAT REMOVAL LINES. ANY COST TO BE INCLUDED IN THE BID PRICE FOR ITEM 582.05M.
4. ALL EXISTING REINFORCEMENT TO REMAIN.
5. ELEVATIONS ARE GIVEN FOR QUANTITY ESTIMATES ONLY.
6. REFER TO CONTRACT D250416 FOR ORIGINAL CONSTRUCTION DETAILS.
7. FOR REMOVAL DETAIL SEE DWG AB10-2.

BRIDGE BEARING RESTORATION NOTES:

1. THE BRIDGE BEARING RESTORATION ITEM 15565.4302M SHALL INCLUDE ALL DESIGNATED WORK AS PER THE SPECIFICATION.
2. IF THE CONTRACTOR ELECTS TO LIFT ONLY ONE GIRDER AT A TIME PER SPAN (TO A MAXIMUM OF 3mm TO REMOVE LOAD FROM BEARINGS), NO VEHICULAR TRAFFIC RESTRICTIONS WILL BE REQUIRED AS STATED IN SPECIFICATION SECTION 585 -STRUCTURAL LIFTING OPERATIONS.
3. BEARING RESTORATION SHALL INCLUDE REPLACEMENT OF BRONZE PLATE.
4. FIXED BEARINGS TO BE CLEANED IN PLACE. DO NOT DISASSEMBLE.
5. SEE BR-12 FOR EAST ABUTMENT BEARING RESTORATION DETAILS.
6. ALL FIVE EXPANSION BEARINGS AT WEST ABUTMENT, SHALL ALSO INCLUDE ITEM 15565.4302 M BRIDGE BEARING RSTORATION AND ITEM 585.01 M STRUCTURAL LIFTING TYPE A. SEE BR-12 FOR DETAILS.

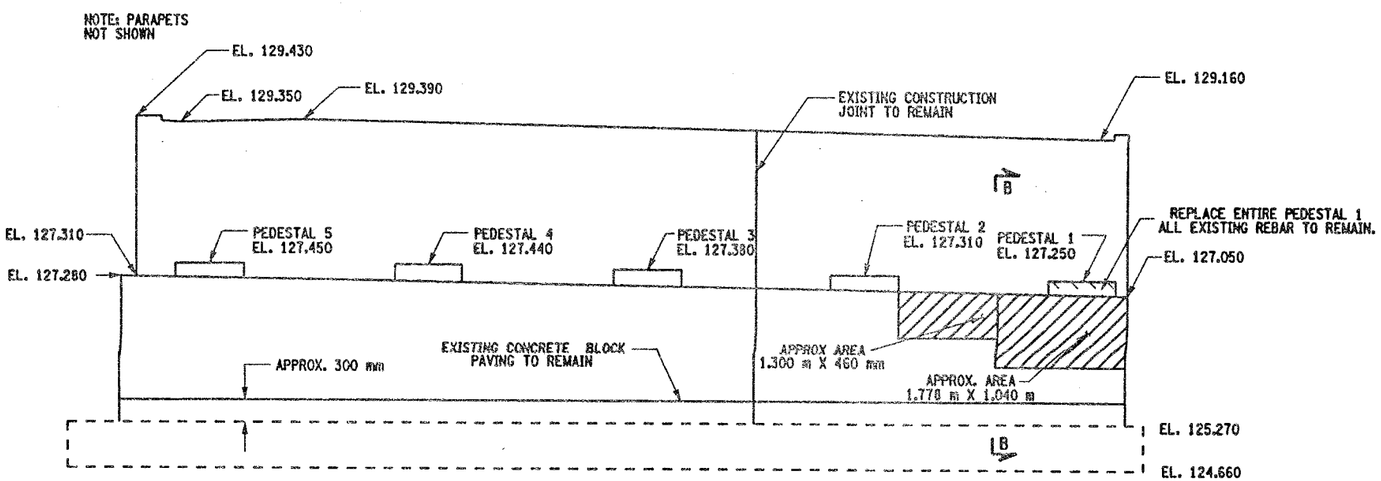

EAST ABUTMENT ELEVATION

SCALE 1:40

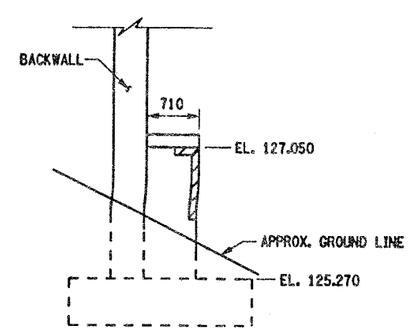

SETION B-B

NOT TO SCALE

AREAS OF PROPOSED WORK: ITEM 580.01M REMOVAL OF STRUCTURAL CONCRETE (CM), ITEM 555.0105M CONCRETE FOR STRUCTURES, CLASS A (CM)

AREAS OF PROPOSED WORK: ITEM 582.05M REMOVAL OF STRUCTURAL CONCRETE-REPLACEMENT WITH CLASS A CONCRETE

CONCRETE TABLE (m^3)		
PLACEMENT	QUANTITY	ITEM NO.
1	0.13	555.0105M

LIST OF ITEMS USED:

ITEM 555.0105M - CONCRETE FOR STRUCTURES CLASS A (CM)
ITEM 15565.4302M - BRIDGE BEARING RESTORATION (EA)
ITEM 580.01M - REMOVAL OF STRUCTURAL CONCRETE (CM)
ITEM 582.05M - REM. OF STRUC. CONC. - REPLACE WITH CLASS A CONCRETE (CM)
ITEM 585.01M - STRUCTURAL LIFTING OPERATIONS, TYPE A (EA)

ALL DIMENSIONS ARE IN mm UNLESS OTHERWISE NOTED

AS BUILT REVISIONS

SIGNATURE DATE

INTERSTATE 481 SB
OVER
TOTMAN ROAD
EAST ABUTMENT

STATE OF NEW YORK
DEPARTMENT OF TRANSPORTATION

FILENAME	REGION	DATE	DRAWING NO.
305613AB.A18	3	10/02	AB10-1

DESIGN SUPERVISOR ____ JOB MANAGER ____ DESIGNED BY ____ CHECKED BY ____ ESTIMATED BY ____ DRAFTED BY ____ CHECKED BY ____

FED ROAD REG. NO.	STATE	CONTRACT NO.	SHEET NO.	TOTAL SHEETS
1	N.Y.	D259214	263	432

BRIDGE REHABILITATION PROJECT (ELEMENT SPECIFIC)
VARIOUS BRIDGES ON INTERSTATE 481
TOWNS OF DEWITT AND CICERO
ONONDAGA COUNTY
P.I.N. 305613 B.I.N. 1072781

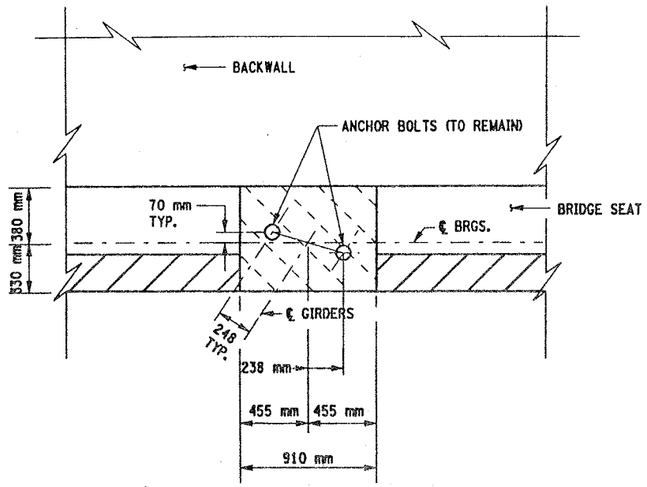

EXISTING ANCHOR BOLT LAYOUT
SCALE 1:20

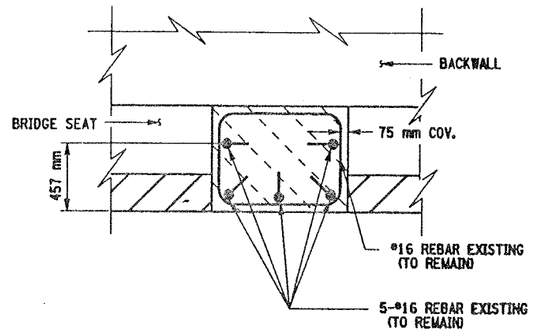

EXISTING PEDESTAL REINFORCEMENT
SCALE 1:20

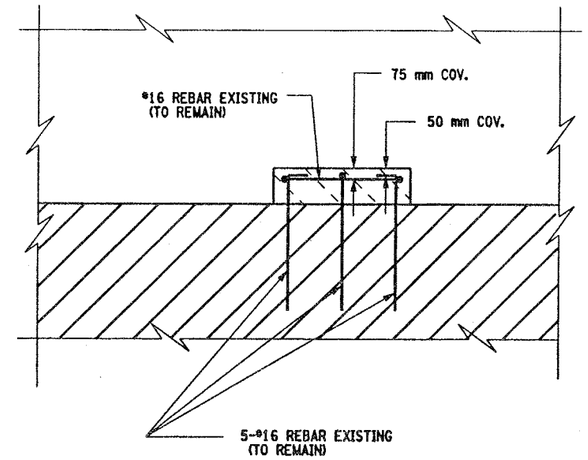

EXISTING PEDESTAL REINFORCEMENT
SCALE 1:20

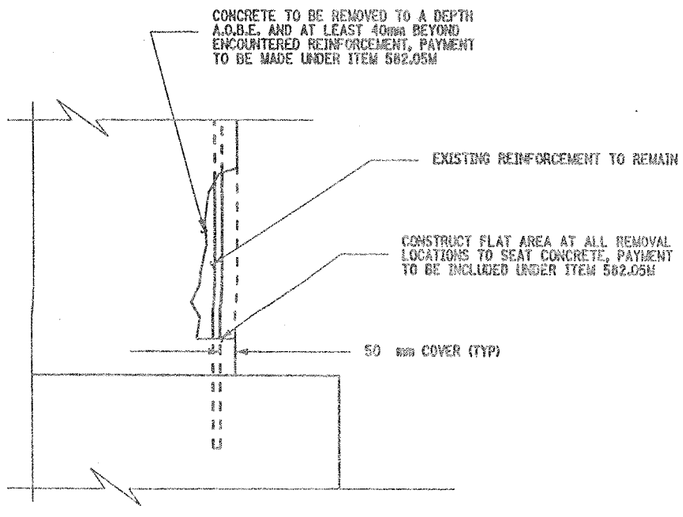

REMOVAL DETAIL
NOT TO SCALE

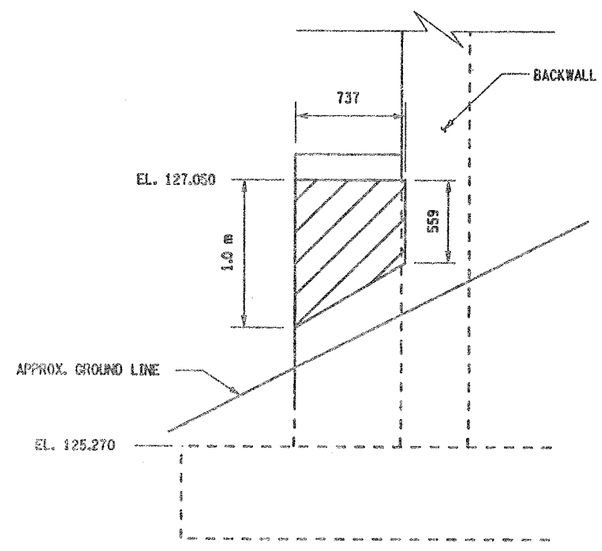

SETION A-A
NOT TO SCALE

AREAS OF PROPOSED WORK: ITEM 580.01M REMOVAL OF STRUCTURAL CONCRETE (CM), ITEM 555.0105M CONCRETE FOR STRUCTURES, CLASS A (CM)

AREAS OF PROPOSED WORK: ITEM 582.05M REMOVAL OF STRUCTURAL CONCRETE-REPLACEMENT WITH CLASS A CONCRETE

LIST OF ITEMS USED:

ITEM 555.0105M - CONCRETE FOR STRUCTURES CLASS A (CM)
ITEM 580.01M - REMOVAL OF STRUCTURAL CONCRETE (CM)
ITEM 582.05M - REM. OF STRUC. CONC. - REPLACE WITH CLASS A CONCRETE (CM)

ALL DIMENSIONS ARE IN mm UNLESS OTHERWISE NOTED

AS BUILT REVISIONS

SIGNATURE DATE

INTERSTATE 481 SB
OVER
TOTMAN ROAD
EAST ABUTMENT

STATE OF NEW YORK
DEPARTMENT OF TRANSPORTATION

FILENAME	REGION	DATE	DRAWING NO.
305613AB.A1B	3	10/02	AB10-2

DESIGN SUPERVISOR ____ JOB MANAGER ____ DESIGNED BY ____ CHECKED BY ____ ESTIMATED BY ____ DRAFTED BY ____ CHECKED BY ____

FED ROAD REG. NO.	STATE	CONTRACT NO.	SHEET NO.	TOTAL SHEETS
1	N.Y.	D259214	264	432

BRIDGE REHABILITATION PROJECT (ELEMENT SPECIFIC)
VARIOUS BRIDGES ON INTERSTATE 481
TOWNS OF DEWITT AND CICERO
ONONDAGA COUNTY
P.I.N. 305613 B.I.N. 1072782

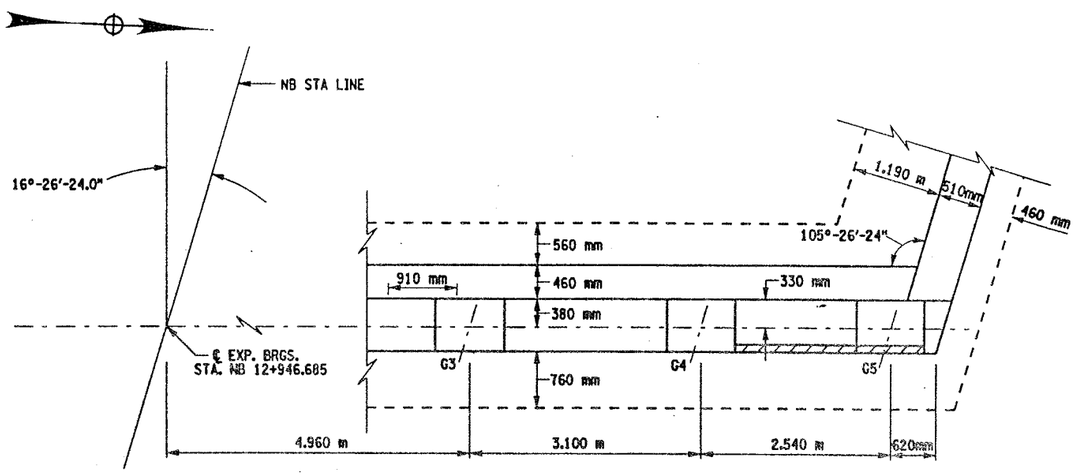

WEST ABUTMENT
PARTIAL PLAN
SCALE 1:40

NOTES:

1. ALL DIMENSIONS SHOWN FOR CONCRETE REMOVAL ARE APPROXIMATE AND SHALL BE FIELD VERIFIED BY THE CONTRACTOR AND EIC.
2. REMOVE CONCRETE TO LIMITS SHOWN AS WELL AS TO SOUND CONCRETE, A.O.B.E.
3. WHEN REMOVING EXISTING CONCRETE, SAWCUT 5 mm MIN. TO PRODUCE NEAT REMOVAL LINES. ANY COST TO BE INCLUDED IN THE BID PRICE FOR ITEM 582.05M.
4. ALL EXISTING REINFORCEMENT TO REMAIN.
5. ELEVATIONS ARE GIVEN FOR QUANTITY ESTIMATES ONLY.
6. REFER TO CONTRACT D250416 FOR ORIGINAL CONSTRUCTION DETAILS.
7. FOR REMOVAL DETAILS SEE DWG. AB10-2.

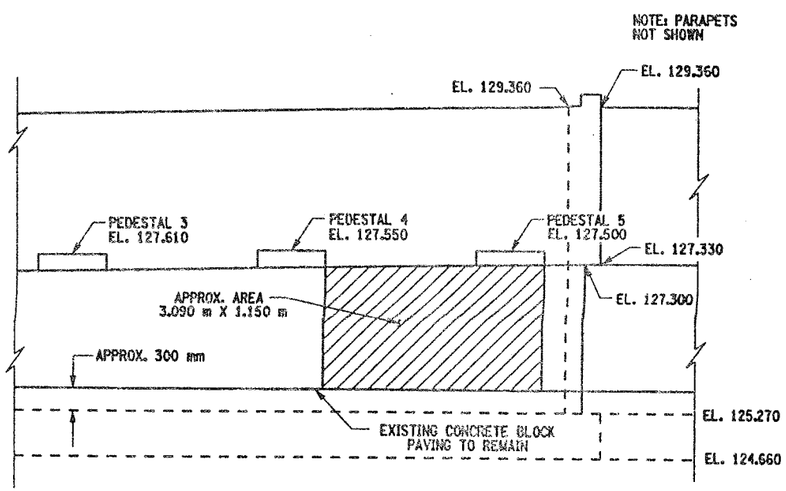

WEST ABUTMENT
PARTIAL ELEVATION
SCALE 1:40

AREAS OF PROPOSED WORK: ITEM 582.05M
REMOVAL OF STRUCTURAL CONCRETE-
REPLACEMENT WITH CLASS A CONCRETE

LIST OF ITEMS USED:

ITEM 582.05M - REMOVAL OF STRUCTURAL CONCRETE - REPLACEMENT WITH CLASS A CONCRETE.

ALL DIMENSIONS ARE IN m UNLESS OTHERWISE NOTED

AS BUILT REVISIONS

SIGNATURE DATE

INTERSTATE 481 NB
OVER
TOTMAN ROAD
WEST ABUTMENT

STATE OF NEW YORK
DEPARTMENT OF TRANSPORTATION

FILENAME	REGION	DATE	DRAWING NO.
305613AB.A18	3	10/02	AB10-3

DESIGN SUPERVISOR ____ JOB MANAGER ____ DESIGNED BY ____ CHECKED BY ____ ESTIMATED BY ____ DRAFTED BY ____ CHECKED BY ____

FED ROAD REG. NO.	STATE	CONTRACT NO.	SHEET NO.	TOTAL SHEETS
1	N.Y.	D259214	265	432

BRIDGE REHABILITATION PROJECT (ELEMENT SPECIFIC)
VARIOUS BRIDGES ON INTERSTATE 481
TOWNS OF DEWITT AND CICERO
ONONDAGA COUNTY
P.I.N. 305613 B.I.N. 1072781

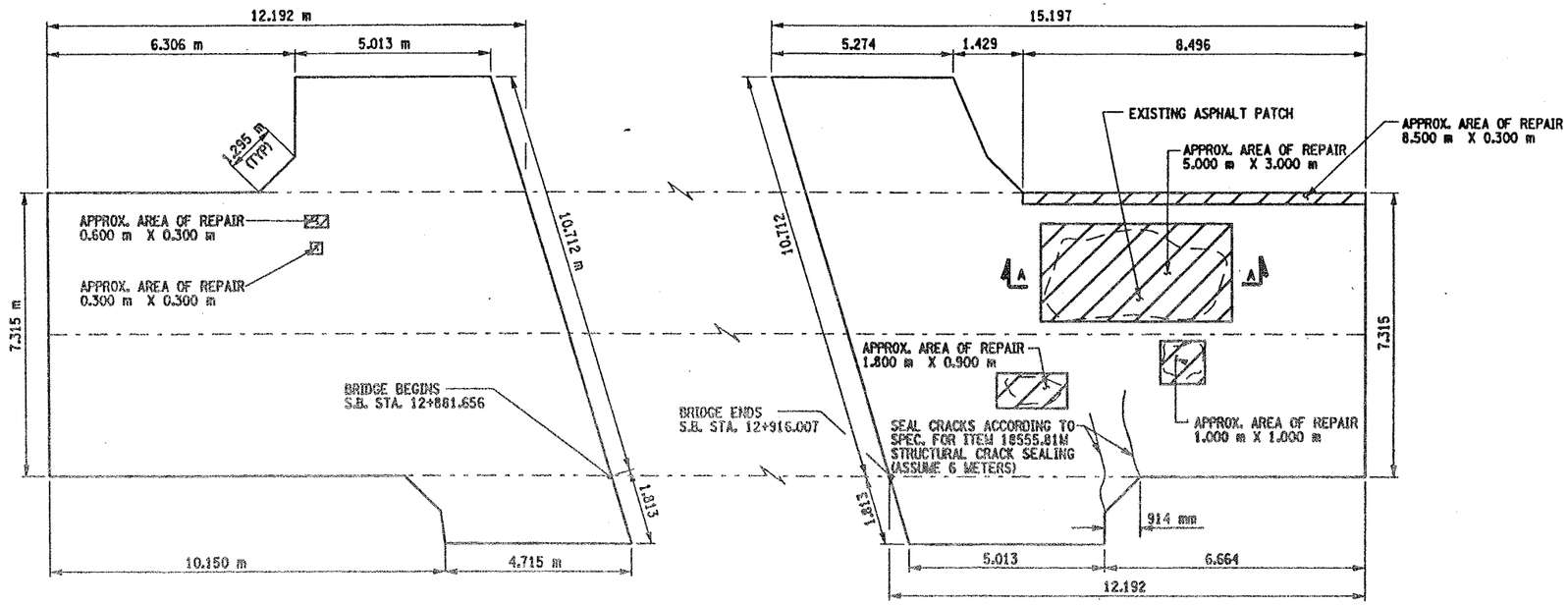

PLAN VIEW
APPROACH SLABS
SCALE: 1 TO 75

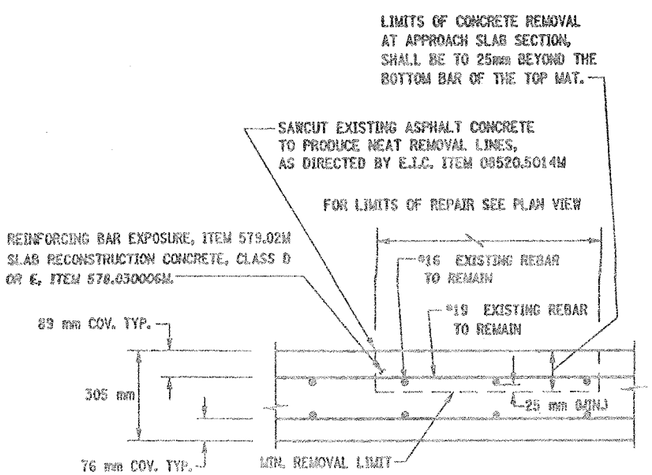

APPROACH SLAB REPAIR
SECTION A-A
SCALE: 5 TO 1

NOTES

1. ALL DIMENSIONS SHOWN FOR CONCRETE REMOVAL ARE APPROXIMATE AND SHALL BE FIELD VERIFIED BY THE CONTRACTOR AND EIC.
2. REMOVE CONCRETE TO LIMITS SHOWN AS WELL AS TO SOUND CONCRETE, A.O.B.E.
3. WHEN REMOVING EXISTING CONCRETE, SAWCUT 5 mm MIN. TO PRODUCE NEAT REMOVAL LINES.
4. ALL EXISTING REINFORCMENT TO REMAIN.
5. REFER TO CONTRACT D250416 FOR ORIGINAL CONSTRUCTION DETAILS

ITEM 579.02M - REINFORCING BAR EXPOSURE, ITEM 578.030006 SLAB RECONSTRUCTION CONCRETE, CLASS D OR E AND ITEM 558.01M TRANSVERSE SAWCUT GROOVING OF STRUCTURAL SLAB SURFACE

LIST OF ITEMS USED:

ITEM 08520.5014M - SAWCUT ASPH CONC/ASPH OVERLAY PCC PAVE (M)
ITEM 18555.81M - STRUCTURAL CRACK SEALING (M)
ITEM 558.01M - TRANSVERSE SAWCUT GROOV OF STR SLAB SURF (SM)
ITEM 578.030006M - SLAB RECONSTRUCTION CONRETE, CLASS D OR E (SM)
ITEM 579.02M - REINFORCING BAR EXPOSURE (SM)

ALL DIMENSIONS ARE IN m UNLESS OTHERWISE NOTED

AS BUILT REVISIONS

SIGNATURE DATE

INTERSTATE 481 SB
OVER
TOTMAN ROAD
APPROACH SLABS

STATE OF NEW YORK
DEPARTMENT OF TRANSPORTATION

FILENAME	REGION	DATE	DRAWING NO.
305613AB.A1A	3	10/02	AS10-1

DESIGN SUPERVISOR ____ JOB MANAGER ____ DESIGNED BY ____ CHECKED BY ____ ESTIMATED BY ____ DRAFTED BY ____ CHECKED BY ____

FED ROAD REG. NO.	STATE	CONTRACT NO.	SHEET NO.	TOTAL SHEETS
1	N.Y.	D259214	266	432

BRIDGE REHABILITION PROJECT (ELEMENT SPECIFIC)
VARIOUS BRIDGES ON INTERSTATE 481
TOWN OF DEWITT AND CICERO
ONONDAGA COUNTY
P.I.N. 305613 B.I.N. 1072791 & 1072792

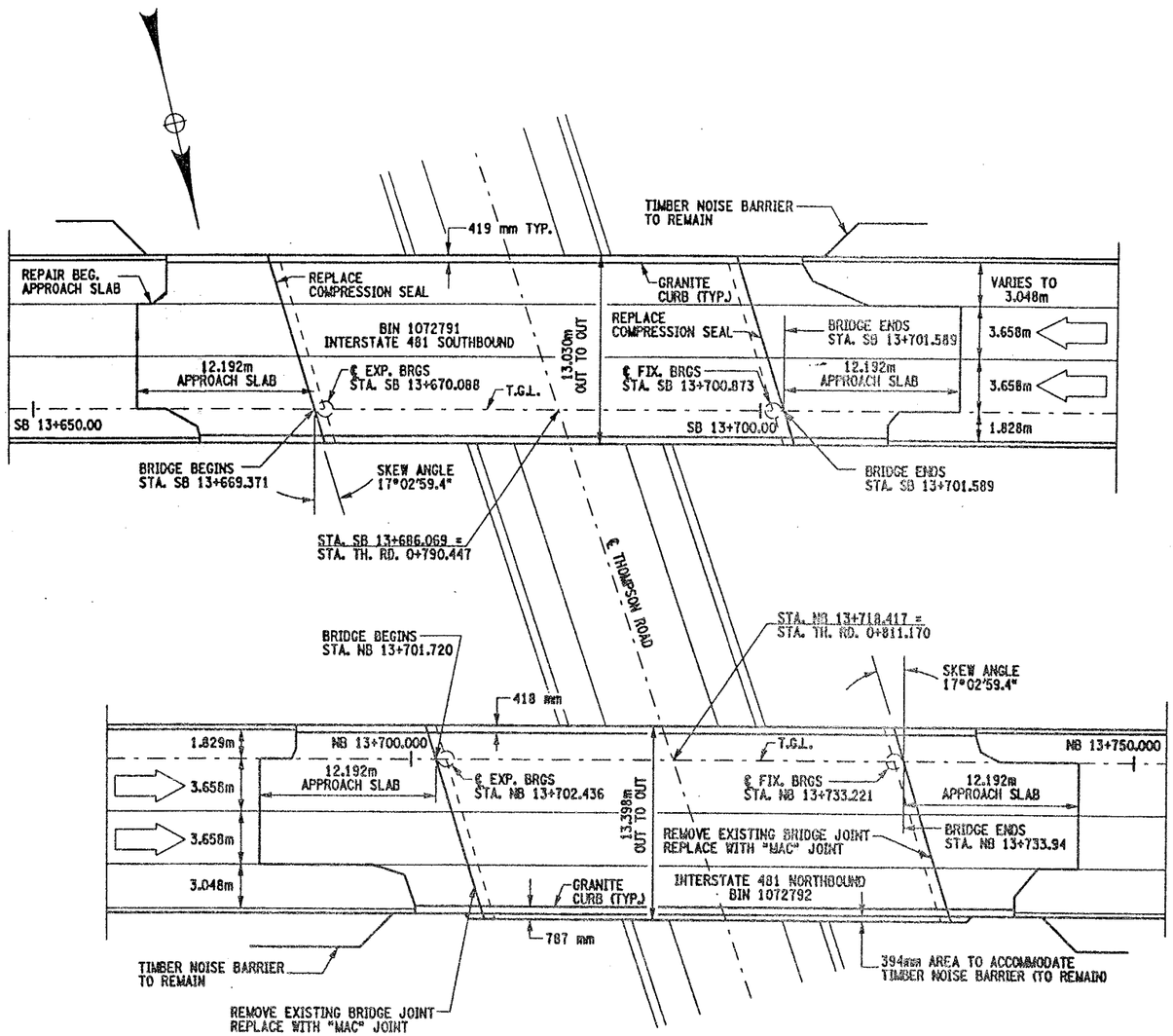

EXISTING PLAN VIEW
SCALE: 1:200

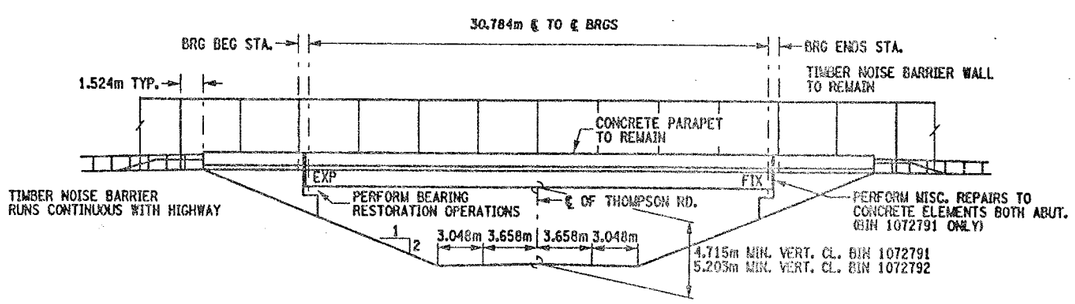

EXISTING ELEVATION VIEW
SCALE: 1:200

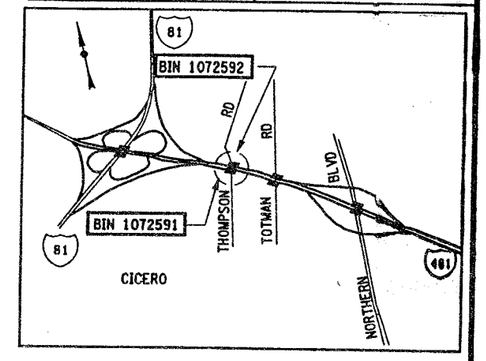

LOCATION MAP
NOT TO SCALE

WORK TO BE DONE (NOT NECESSARILY IN THIS ORDER)

BIN 1072791:

1. ESTABLISH MP&T SCHEME FOR STAGE CONSTRUCTION.
2. REPLACE COMPRESSION SEALS AT THE BRIDGE JOINTS.
3. REPAIR CONCRETE BEGINNING APPROACH SLAB. (SEE DWG. MS-2)
4. PERFORM BEARING RESTORATION OPERATIONS.
5. PERFORM MISCELLANEOUS REPAIRS TO CONCRETE ELEMENTS, BOTH ABUTMENTS.

BIN 1072792:

1. ESTABLISH MP&T SCHEME FOR STAGE CONSTRUCTION.
2. REMOVE EXISTING BRIDGE JOINTS.
3. PLACE NEW BRIDGE JOINTS, ("MAC" JOINTS).
4. PERFORM BEARING RESTORATION OPERATIONS.

NOTE:

"MAC" JOINT - MODIFIED ARMORED JOINT SYSTEM WITH COMPRESSION SEAL.

BIN 1072791 SOUTHBOUND
BIN 1072792 NORTHBOUND

ALL DIMENSIONS ARE IN m UNLESS OTHERWISE NOTED

AS BUILT REVISIONS

SIGNATURE DATE

INTERSTATE 481
OVER
THOMPSON ROAD
PLAN, ELEVATION AND BRIDGE SECTION

STATE OF NEW YORK
DEPARTMENT OF TRANSPORTATION

FILENAME	REGION	DATE	DRAWING NO.
305613AC.G1A	3	10/02	GP11-1

DESIGN SUPERVISOR ____ JOB MANAGER ____ DESIGNED BY ____ CHECKED BY ____ DRAFTED BY ____ CHECKED BY ____ ESTIMATED BY ____

1072781

FED ROAD REG. NO.	STATE	CONTRACT NO.	SHEET NO.	TOTAL SHEETS
1	N.Y.	D259214	352	432

BRIDGE REHABILITATION PROJECT (ELEMENT SPECIFIC)
VARIOUS BRIDGES ON INTERSTATE 481
TOWNS OF DEWITT AND CICERO
ONONDAGA COUNTY
P.I.N. 305613 B.I.N. 1072781

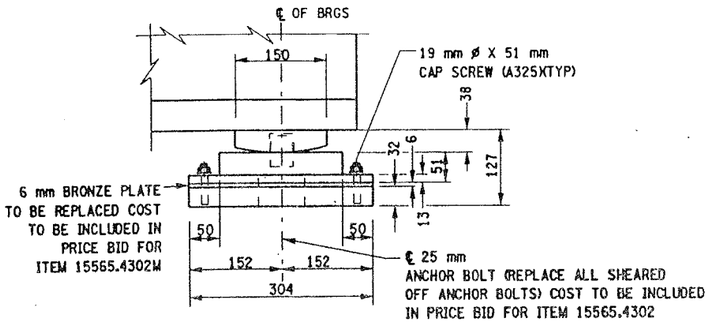

EXPANSION SIDE ELEVATION
NOT TO SCALE

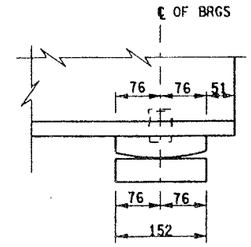

FIXED SIDE ELEVATION
NOT TO SCALE

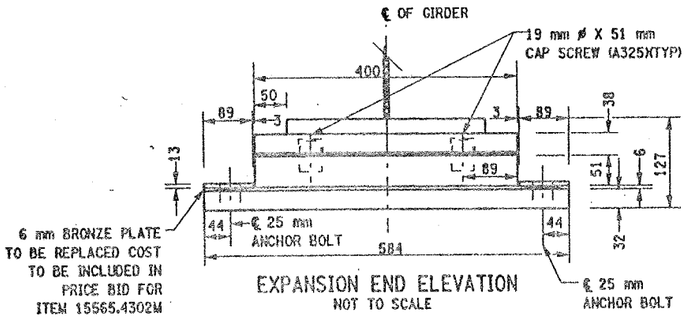

EXPANSION END ELEVATION
NOT TO SCALE

LOW STEEL EXPANSION BEARING DETAILS
BIN 1072781 - EAST ABUTMENT

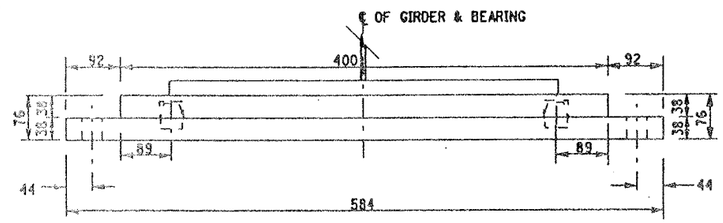

FIXED END ELEVATION
NOT TO SCALE

LOW STEEL FIXED BEARING DETAILS
BIN 1072781-WEST ABUTMENT

BRIDGE BEARING RESTORATION NOTES:

1. BRIDGE BEARING RESTORATION ITEM 15565.4302M SHALL INCLUDE ALL DESIGNATED WORK AS PER THE SPECIFICATION.
2. STRUCTURAL LIFTING SHALL BE USED WITH ALL EXPANSION BEARING RESTORATION.
3. IF THE CONTRACTOR ELECTS TO LIFT ONLY ONE GIRDER AT A TIME PER SPAN (TO A MAXIMUM OF 3 mm TO REMOVE LOAD FROM BEARINGS), NO VEHICULAR TRAFFIC RESTRICTIONS WILL BE REQUIRED AS STATED IN SPECIFICATIONS SECTON 585-STRUCTURAL LIFTING OPERATIONS.
4. BEARING RESTORATION SHALL AS A MINIMUM, AND IN ALL CASES INCLUDE REPLACEMENT OF BRONZE PLATE.
5. FIXED BEARING TO BE CLEANED IN PLACE. DO NOT DISASSEMBLE.

JACKING NOTES:

THE METHOD OF LIFTING SHALL BE APPROVED BY THE DEPUTY CHEIF ENGINEER (STRUCTURES), DCES, TWO WEEKS PRIOR TO THE START OF THE WORK.

NO LIFTING WILL BE ALLOWED UNTIL ALL TEMPORARY SUPPORTS ARE SECURED.

WHEN POSSIBLE, THERE WILL BE NO LIVE LOAD DURING LIFTING.

LIFTING SHALL BE CONFINED TO ONE END OF A SPAN AT ANY ONE TIME.

IF THE CONTRACTOR ELECTS TO LIFT ONLY ONE GIRDER AT A TIME PER PIER (TO A MAXIMUM OF 3 mm TO REMOVE LOAD FROM BEARING), NO VEHICULAR TRAFFIC RESTRICTIONS WILL BE REQUIRED AS STATED IN THE SPECIFICATION SECTION 585-STRUCTURAL LIFTING OPERATIONS.

ALL MATERIALS ASTM A588
EXCEPT AS NOTED

LIST OF ITEMS USED:

ITEM 15565.4302 M - BRIDGE BEARING RESTORATION (EA)
ITEM 585.01M - STRUCTURAL LIFTING OPERATIONS (TYPE A) (EA)

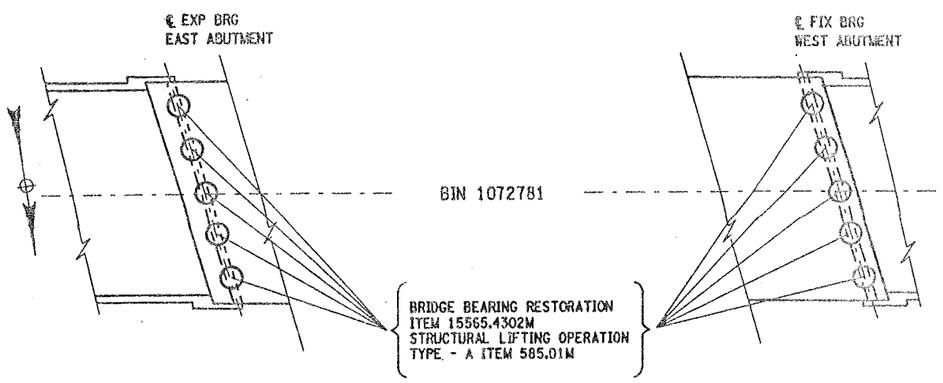

NOT TO SCALE

• PERFORM STRUCTURAL LIFTING UNDER ITEM 585.01M - STRUCTURAL LIFTING OPERATIONS - TYPE A (LIFTING AT AN ABUTMENT).

JACKING LOADS:

D.L. = 50 MT
L.L. = 50 MT
TOTAL = 1000 MT

ALL DIMENSIONS ARE IN mm UNLESS OTHERWISE NOTED

AS BUILT REVISIONS

SIGNATURE DATE

INTERSTATE 481 SB
OVER
TOTMAN ROAD

BEARING RESTORATION DETAILS

STATE OF NEW YORK
DEPARTMENT OF TRANSPORTATION

FILENAME	REGION	DATE	DRAWING NO.
305613ZZ.M1A	3	10/02	BR-12

DESIGN SUPERVISOR ____ JOB MANAGER ____ DESIGNED BY ____ CHECKED BY ____ ESTIMATED BY ____ DRAFTED BY ____ CHECKED BY ____

FED ROAD REG. NO.	STATE	CONTRACT NO.	SHEET NO.	TOTAL SHEETS
1	N.Y.	D259214	351	432

BRIDGE REHABILITATION PROJECT (ELEMENT SPECIFIC)
VARIOUS BRIDGES ON INTERSTATE 481
TOWNS OF DEWITT AND CICERO
ONONDAGA COUNTY
P.I.N. 305613 B.I.N. 1093571 & 1093572

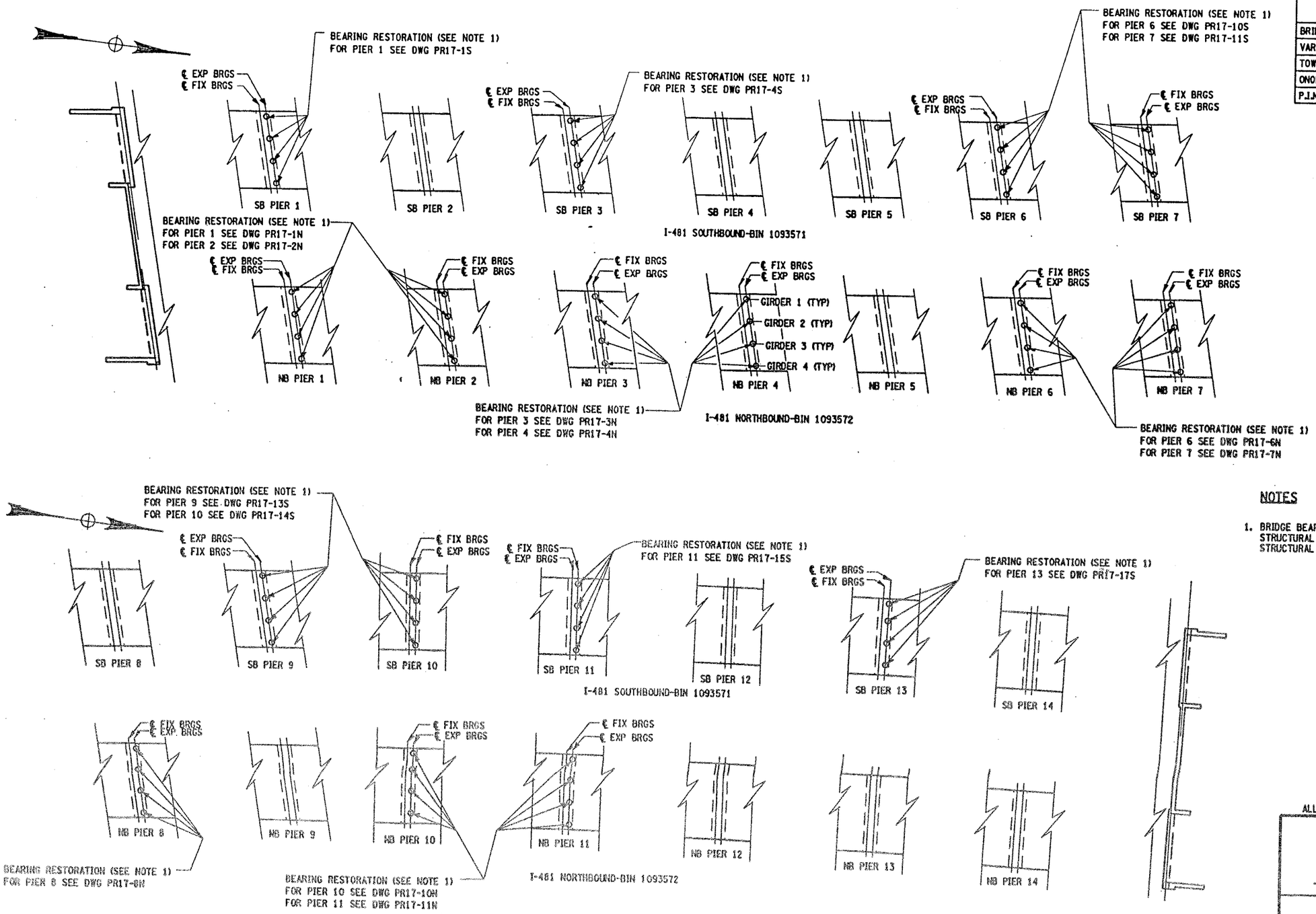

BRIDGE PLAN SCHEMATIC
SCALE 1:300

NOTES

1. BRIDGE BEARING RESTORATION ITEM 15565.4302M AND EITHER STRUCTURAL LIFTING OPERATION -(TYPE B) ITEM 585.02M OR STRUCTURAL LIFTING OPERATION -(TYPE C) ITEM 585.03M

ALL DIMENSIONS ARE IN m UNLESS OTHERWISE NOTED

AS BUILT REVISIONS

SIGNATURE DATE

INTERSTATE 481 SB & NB
OVER
CSX RAILROAD

BEARING RESTORATION DETAILS
BRIDGE PLAN SCHEMATIC

STATE OF NEW YORK
DEPARTMENT OF TRANSPORTATION

FILENAME	REGION	DATE	DRAWING NO.
305613ZZ.M1A	3	10/02	BR-11

DESIGN SUPERVISOR ____ JOB MANAGER ____ DESIGNED BY ____ ESTIMATED BY ____ DRAFTED BY ____ CHECKED BY ____ CHECKED BY ____

FED ROAD REG. NO.	STATE	CONTRACT NO.	SHEET NO.	TOTAL SHEETS
1	N.Y.	D259214	362	432

BRIDGE REHABILITATION PROJECT (ELEMENT SPECIFIC)
VARIOUS BRIDGES ON INTERSTATE 481
TOWNS OF DEWITT AND CICERO
ONONDAGA COUNTY
P.I.N. 305613 | B.I.N. ALL BINS

BRIDGE JOINT TABLE

B.I.N. NUMBER	JOINT LOCATION	JOINT SKEW	SPAN(S) LENGTH FOR JOINT (METERS)	JOINT BEND LOCAT'N RT	JOINT BEND LOCAT'N LT	EXISTING JOINT TYPE	PROPOSED JOINT TYPE	CURB TO CURB DISTANCE (METERS) (SEE NOTES)	FASCIA & MEDIAN LENGTH (METERS) LT/RT	TOTAL LENGTH (METERS)	JOINT ITEM NUMBER(S)	DRAWING NUMBER SECT VIEW	DRAWING NUMBER PLAN VIEW	DRAWING NUMBER FASCIA DETAIL
1072530	EAST ABUT.	0°-00'-00"	33.528	N	N	ACJ	MAC-5	15.850	.457/.457	16.764	567.35M	JD-30	JD-29	JD-30
	WEST ABUT.	0°-00'-00"	37.795	N	N	ACJ	MAC-5	15.850	.457/.457	16.764	567.35M	JD-30	JD-29	JD-30
1072571	SOUTH ABUT.	20°-29'-45.2"	44.196	N	N	ACJ	MAC-6	14.481	.488/.488	15.457	567.36M	JD-32	JD-31	JD-32
	NORTH ABUT.	20°-29'-45.2"	———	N	N	ACJ	MAC-1	15.456	.488/.488	16.428	567.31M	JD-32	JD-31	JD-32
1072572	SOUTH ABUT.	21°-09'-2.1"	44.196	N	N	ACJ	MAC-6	12.746	.490/.490	13.726	567.36M	JD-34	JD-33	JD-34
	NORTH ABUT.	21°-09'-2.1"	———	N	N	ACJ	MAC-1	12.746	.490/.490	13.726	567.31M	JD-34	JD-33	JD-34
1072581	SOUTH ABUT.	3°59'-27.5"	37.033	N	N	ACJ	MAC-5	11.917	.458/.458	12.833	567.35M	JD-36	JD-35	JD-36
	NORTH ABUT.	3°-59'-27.5"	———	N	N	ACJ	MAC-1	11.917	.458/.458	12.833	567.31M	JD-36	JD-35	JD-36
1072582	SOUTH ABUT.	3°-51'-57.9"	37.033	N	N	ACJ	MAC-5	11.915	.458/.458	12.831	567.35M	JD-38	JD-37	JD-38
	NORTH ABUT.	3°-51'-57.9"	———	N	N	ACJ	MAC-1	11.915	.458/.458	12.831	567.31M	JD-38	JD-37	JD-38
1072781	EAST ABUT.	16°-26'-24"	———	N	N	ACJ	MAC-1	12.500	.530/.530	13.560	567.31M	JD-40	JD-39	JD-40
	WEST ABUT.	16°-26'-24"	33.635	N	N	ACJ	MAC-5	12.500	.530/.530	13.560	567.35M	JD-40	JD-39	JD-40
1072782	EAST ABUT.	16°-26'-24"	———	N	N	ACJ	MAC-1	13.183	.530/.530	14.243	567.31M	JD-42	JD-41	JD-42
	WEST ABUT.	16°-26'-24"	31.394	N	N	ACJ	MAC-5	12.589	.530/.530	13.649	567.35M	JD-42	JD-41	JD-42
1072791	EAST ABUT.	17°-02'-59.4"	30.785	N	N	ACJ	RCS	12.566	.531/.531	13.628	16567.64M	JD-47	JD-43	JD-47
	WEST ABUT.	17°-02'-59.4"	———	N	N	ACJ	RCS	12.566	.531/.531	13.628	16567.64M	JD-47	JD-43	JD-47
1072792	EAST ABUT.	17°-02'-59.4"	30.785	N	N	ACJ	MAC-5	12.566	.530/.530	14.015	567.35M	JD-44	JD-43	JD-44
	WEST ABUT.	17°-02'-59.4"	———	N	N	ACJ	MAC-1	12.566	.530/.530	14.015	567.31M	JD-44	JD-43	JD-44
1093510	WEST ABUT.	44°-07'-00"	———	N	N	ACJ/ADA	RCS	16.560	.637/.637	17.834	16567.64M	JD-46	JD-45	JD-46
	EAST ABUT.	40°-26'-00"	37.522	N	N	ADA	RADA	15.620	———	15.620	———	JD-46	JD-45	———

LEGEND

EXISTING JOINT TYPE:

ACJ = ARMORED COMPRESSION JOINT SYSTEM
MOD = MODULAR JOINT SYSTEM
MAC = MODIFIED ARMORED COMPRESSION SYSTEM (NO HORIZ. ARMORING ANGLE)
ADA = ARMORED DECK ANGLE
SS = STRIP SEAL JOINT
OPEN = OPEN JOINT

PROPOSED JOINT TYPE:

MAC-1 = MOD. ARM./COMP. SEAL JT. SYS. (A-1)
MAC-2 = MOD. ARM./COMP. SEAL JT. SYS. (A-2)
MAC-5 = MOD. ARM./COMP. SEAL JT. SYS. (A-5)
MAC-6 = MOD. ARM./COMP. SEAL JT. SYS. (A-6)
RCS = REPLACE EXISTING COMPRESSION SEAL
RADA = REMOVE ARMOR DECK ANGLE
MOD-1 = MODULAR JT. SYS. (ONE-CELL)
MOD-2 = MODULAR JT. SYS. (TWO-CELL)

JOINT BEND LOCATION:

N = NO BENDS
CRB = CURB LINE
PAV'T = PAVEMENT

GENERAL NOTES:

- ALL MEASUREMENTS SHALL BE FIELD VERIFIED.
- CURB TO CURB LENGTHS ARE MEASURED ALONG ℄ OF JOINT.
- MULTIPLE DIMENSIONS ARE SHOWN LOOKING UP-STATION, LEFT TO RIGHT.
- ALL DIMENSIONS ARE SHOWN IN METERS.

INFORMATIONAL NOTES:

BIN 1072530 - NO JOINT AT PIER.

BIN 1072791 - REPLACE COMPRESSION SEALS
BEG. ABUT. (EAST), TYPE A-5
END ABUT. (WEST), TYPE A-1

FOR JOINT DETAILS REFER TO THE FOLLOWING DRAWINGS:

DWG. NO. JD-1 - MODIFIED ARMORED COMPRESSION SEAL JOINT SYSTEM.
DWG. NO. JD-24 - ONE-CELL MODULAR JOINT SYSTEM.
DWG. NO. JD-25 - TWO-CELL MODULAR JOINT SYSTEM.

LIST OF BRIDGE JOINT ITEMS USED:

ITEM 566.01M - MODULAR EXP. JOINT SYSTEM ONE-CELL (M)
ITEM 566.02M - MODULAR EXP. JOINT SYSTEM TWO-CELL (M)
ITEM 567.31M - MODIFIED ARMORED JOINT SYSTEM W/ COMP. SEAL TYPE A1 (m)
ITEM 567.32M - MODIFIED ARMORED JOINT SYSTEM W/ COMP. SEAL TYPE A2 (m)
ITEM 567.35M - MODIFIED ARMORED JOINT SYSTEM W/ COMP. SEAL TYPE A5 (m)
ITEM 567.36M - MODIFIED ARMORED JOINT SYSTEM W/ COMP. SEAL TYPE A6 (m)
ITEM 16567.640001M - REPLACE COMPRESSION SEAL FOR EXISTING BRDGE JOINTS (m)

ALL DIMENSIONS ARE IN m UNLESS OTHERWISE NOTED

AS BUILT REVISIONS

SIGNATURE DATE

INTERSTATE 481 VARIOUS BRIDGES

BRIDGE JOINT TABLE

STATE OF NEW YORK
DEPARTMENT OF TRANSPORTATION

FILENAME	REGION	DATE	DRAWING NO.
305613AJJA1	3	10/02	JT-2

CHECKED BY
DRAFTED BY
ESTIMATED BY
CHECKED BY
DESIGNED BY
JOB MANAGER
DESIGN SUPERVISOR

FED ROAD REG. NO.	STATE	CONTRACT NO.	SHEET NO.	TOTAL SHEETS
1	N.Y.	D259214	365	432

BRIDGE REHABILITATION PROJECT (ELEMENT SPECIFIC)
VARIOUS BRIDGES ON INTERSTATE 481
TOWNS OF DEWITT AND CICERO
ONONDAGA COUNTY
P.I.N. 305613 B.I.N. ALL BIN'S

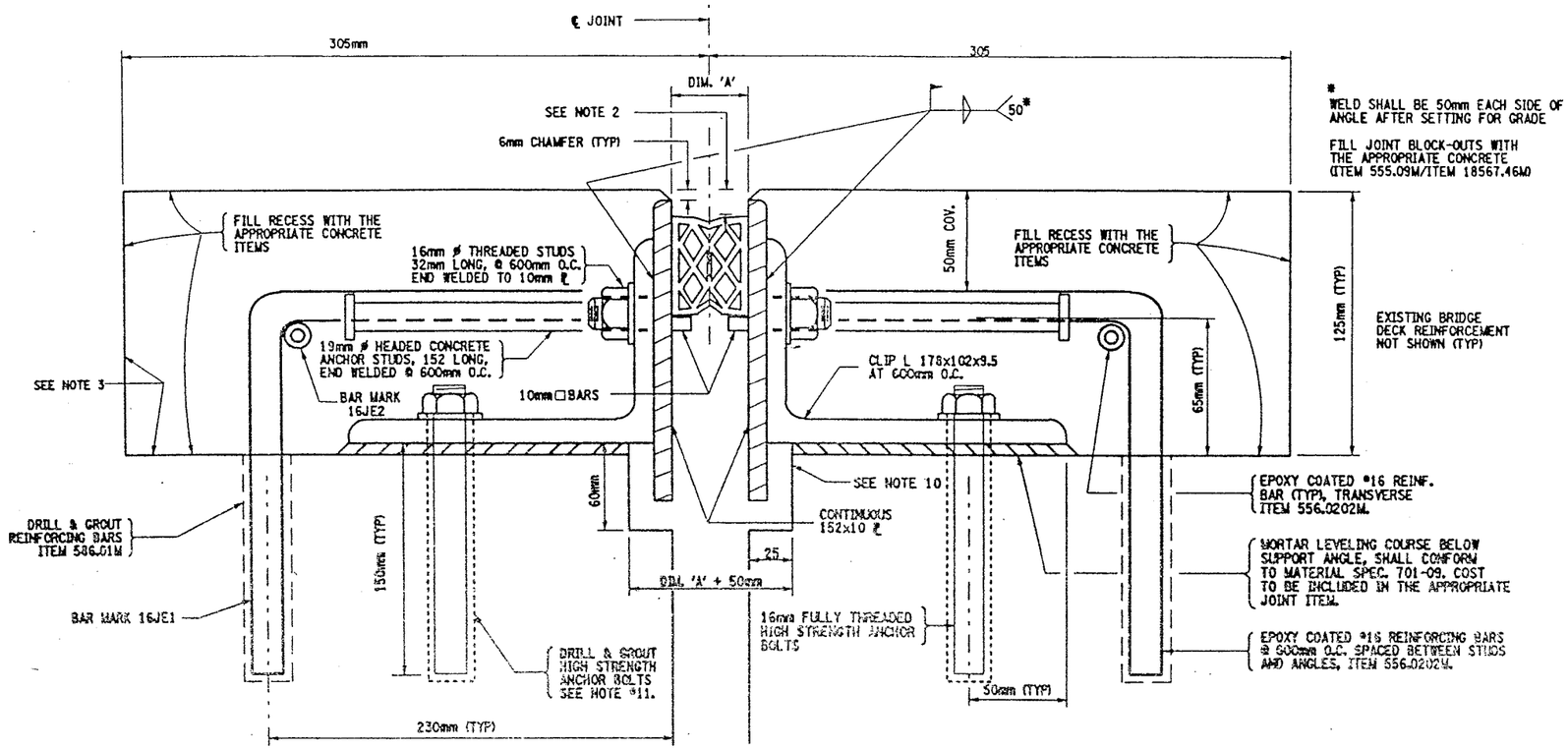

* WELD SHALL BE 50mm EACH SIDE OF ANGLE AFTER SETTING FOR GRADE

FILL JOINT BLOCK-OUTS WITH THE APPROPRIATE CONCRETE (ITEM 555.09M/ITEM 18567.46M)

MODIFIED ARMORED COMPRESSION JOINT DETAIL

FOR INSTALLATION LOCATIONS SEE JOINT TABLE

NOT TO SCALE

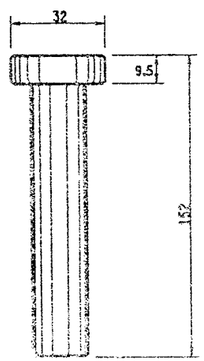

DETAIL OF HEADED CONCRETE ANCHOR STUD

NOT TO SCALE

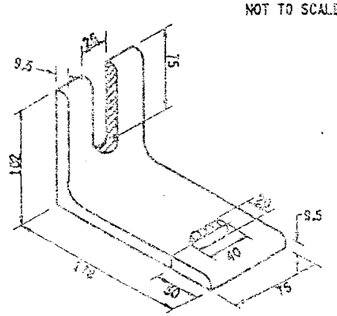

DETAIL OF CLIP ANGLE

NOT TO SCALE

NOTE:

ALL CUTTING TO BE DONE WITH A COPING SAW, SOAP AND WATER

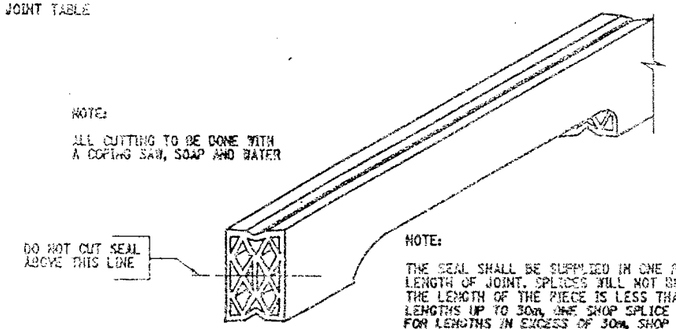

NOTE:

THE SEAL SHALL BE SUPPLIED IN ONE PIECE FOR THE FULL LENGTH OF JOINT. SPLICES WILL NOT BE PERMITTED WHEN THE LENGTH OF THE PIECE IS LESS THAN 15m. FOR LENGTHS UP TO 30m, ONE SHOP SPLICE WILL BE PERMITTED. FOR LENGTHS IN EXCESS OF 30m, SHOP SPLICES MAY BE PLACED AT APPROXIMATELY 15m INTERVALS.

DETAIL FOR CUTTING SEAL

NOT TO SCALE

GENERAL NOTES:

1. THE TEMPERATURE OF THE BRIDGE MUST BE TAKEN ON THE STRUCTURAL STEEL SURFACE TO DETERMINE THE TEMPERATURE CORRECTION FOR THE JOINT OPENINGS.
2. THIS DEPTH SHALL BE INDICATED ON THE SHOP DRAWINGS AND SHALL BE SUCH THAT WHEN THE SEAL IS COMPRESSED TO 50% OF ITS NORMAL WIDTH, THE TOP OF THE SEAL SHALL BE NOT LESS THAN 6mm NOR MORE THAN 19mm BELOW THE TOP OF THE ROADWAY.
3. RECESSES RECEIVING ITEM 555.09M. AFTER SURFACE PREPARATION, THOROUGHLY WET THE CONCRETE SURFACE AND ALL POROUS SURFACES TO BE IN CONTACT WITH NEW CONCRETE, FOR 12 HOURS. NOTE THE USE OF MATERIAL SPECIF. 705-22 PORTLAND CEMENT MORTAR BONDING GROUT HAS BEEN ELIMINATED, SEE INSERT IN PROJECT PROPOSAL.
4. A WATER-TIGHT INTEGRITY TEST SHALL BE PERFORMED BY THE CONTRACTOR AT ALL COMPRESSION SEAL JOINT INSTALLATIONS. THE FOLLOWING TEST PARAMETERS SHALL BE INCORPORATED IN THE TEST:
   1. A 15 MINUTE MINIMUM PERIOD OF STANDING WATER, WITH A 25mm MINIMUM DEPTH SHALL BE USED.
   2. IN ADDITION, IN LOCATIONS OF COPED AREAS OF THE SEAL, BENDS, ETC., WATER PRESSURE SHALL BE APPLIED, TO THE SATISFACTION OF THE EIC FOR A 15 MINUTE PERIOD.
   3. LIMITS OF TEST AREA SHALL BE FROM FACE OF CURB TO FACE OF CURB ON THE DECK SURFACE.
5. NO PAYMENT WILL BE MADE TO THE CONTRACTOR FOR THE JOINT IF, IN THE OPINION OF THE ENGINEER, THE INSTALLED JOINT LEAKS WITHIN THE 15 MINUTE TEST PERIOD.
6. PRIOR TO THE START OF WORK AT EACH JOINT, THE CONTRACTOR SHALL SUBMIT A WRITTEN PLAN FOR THE SPECIFICS OF THE TESTING, INCLUDING CONTAINMENT OF THE WATER AND THE METHOD TO BE USED FOR ACCESS BY THE E.I.C. TO THE BOTTOM OF THE JOINT BEING TESTED.
7. THE COST OF ALL LABOR, EQUIPMENT AND MATERIALS REQUIRED FOR THE TESTING WHICH INCLUDES, BUT IS NOT LIMITED TO:
   1. A CONTAINMENT SYSTEM FOR THE TEST WATER.
   2. PROVISIONS FOR E.I.C. ACCESS TO THE BOTTOM OF THE JOINT.
   SHALL BE INCLUDED IN THE PRICE BID FOR THE RESPECTIVE JOINT ITEMS.
8. THE COST OF ALL LABOR, EQUIPMENT, AND MATERIALS TO INSTALL THE NEW JOINT SHALL BE INCLUDED IN THE UNIT PRICE BID FOR THE APPROPRIATE JOINT ITEM.
9. MORTAR LEVELING COURSE SHALL CONFORM TO MATERIAL SPECIFICATION 701-09 AND SHALL BE INCLUDED IN THE PRICE BID FOR THE APPROPRIATE JOINT ITEM.
10. THE DIMENSIONS OF THE REMOVAL AREA UNDER THE 152x10 PLATES ARE SHOWN TO ALLOW SPACE FOR THE PLATES TO REST FREELY. IF THERE IS ALREADY ADEQUATE SPACE, NO CONCRETE REMOVAL OR REPLACEMENT IS REQUIRED IN THIS AREA.
11. 16 mm ø ASTM A325M ANCHOR BOLT TO BE DRILLED AND GROUTED IN PLACE IN ACCORDANCE WITH THE REQUIREMENTS OF SUB-SECTION 586-3.02. GROUTING MATERIALS SHALL BE IN ACCORDANCE WITH MATERIALS SUB-SECTION 701-07 ANCHORING MATERIALS-CHEMICALLY CURING. HOLES TO BE DRILLED TO THE DIAMETER AND DEPTH RECOMMENDED BY THE MANUFACTURER OF THE GROUTING MATERIAL (MIN. DEPTH OF 150 mm). THE COST OF THE ANCHORS, INCLUDING DRILLING AND GROUTING, SHALL BE INCLUDED IN THE UNIT PRICE BID FOR THE APPROPRIATE JOINT SYSTEM ITEM.
12. IT IS DESIRABLE TO HAVE THE ARMORED JOINT WITH ITS COMPRESSION SEAL ASSEMBLED IN THE SHOP AND DELIVERED TO THE JOB SITE ALL SET FOR INSTALLATION IN ITS PREFORMED RECESS IN THE STRUCTURAL SLAB. IN CASES WHERE THE ARMORED JOINT CANNOT BE ASSEMBLED IN THE SHOP, DUE TO ITS EXCESSIVE LENGTH CAUSING SHIPPING PROBLEMS, THE JOINT SHALL BE SEALED WITH THE COMPRESSION SEAL BEFORE THE STRUCTURE IS OPENED TO TRAFFIC INCLUDING CONSTRUCTION TRAFFIC, AND BEFORE DIS CONTINUING OPERATIONS WHEN WORK IS SUSPENDED DURING THE WINTER.

ALL DIMENSIONS ARE IN mm UNLESS OTHERWISE NOTED

EPOXY POLYSULFIDE GROUT NOTE:

CONTRACTOR MAY WITH THE APPROVAL OF THE ENGINEER USE MATERIAL SPECIFICATION 721-03 EPOXY POLYSULFIDE GROUT, AT THE RECESSES, INSTEAD OF THE 12 HOUR CONTINUOUS PREWETTING REQUIREMENTS (PROJECT PROPOSAL). CONTRACTOR MUST ENSURE PROPER CONSTRUCTION PRACTICES ARE FOLLOWED WHEN USING THIS GROUT. THE USE OF EPOXY POLYSULFIDE GROUT SHALL BE AT NO ADDITIONAL COST TO THE STATE.

SEALS (mm)			ARMORED JOINT SYSTEM	
TYPE	NOMINAL WIDTH	DIM. "A" @ 20°C.	TYPE	END CONDITION
1	44	25	A1	Fixed End Only
2	51	30	A2	Exp. up to 18 m
3	64	38	A3	Exp. over 18 m to 23 m
4	76	44	A4	Exp. over 23 m to 27 m
5	89	52	A5	Exp. over 27 m to 38 m
6	102	60	A6	Exp. over 38 m to 46 m

Maximum Skew Limits: Fixed End - No Limit
Exp. End - 45° A2 thru A6

LIST OF ITEMS USED:

ITEM 555.09M - STRUCT. CONCRETE, CLASS "HP" (CM)
ITEM 556.0202M - EPOXY COATED BAR REINF. FOR STRUCT. (kg)
ITEM 567.31M - MOD. ARMORED JOINT SYSTEM W/ COMP. SEAL TYPE A1 (m)
ITEM 567.32M - MOD. ARMORED JOINT SYSTEM W/ COMP. SEAL TYPE A2 (m)
ITEM 567.35M - MOD. ARMORED JOINT SYSTEM W/ COMP. SEAL TYPE A5 (m)
ITEM 567.36M - MOD. ARMORED JOINT SYSTEM W/ COMP. SEAL TYPE A6 (m)
ITEM 18567.46M - ELASTOMERIC CONC. FOR BRIDGE JT. SYSTEMS (M)
ITEM 586.01M - DRILL & GROUT REINF. BARS (mm)

AS BUILT REVISIONS

SIGNATURE DATE

INTERSTATE 481

COMPRESSION SEAL JOINT DETAILS

STATE OF NEW YORK
DEPARTMENT OF TRANSPORTATION

FILENAME	REGION	DATE	DRAWING NO.
305613AJJA1	3	10/02	JD-1

DESIGN SUPERVISOR ____ JOB MANAGER ____ DESIGNED BY ____ CHECKED BY ____ DRAFTED BY ____ ESTIMATED BY ____ CHECKED BY ____

FED ROAD REG. NO.	STATE	CONTRACT NO.	SHEET NO.	TOTAL SHEETS
1	N.Y.	D259214	403	432

BRIDGE REHABILITATION PROJECT (ELEMENT SPECIFIC)
VARIOUS BRIDGES ON INTERSTATE 481
TOWNS OF DEWITT AND CICERO
ONONDAGA COUNTY
P.I.N. 305613 B.I.N. 1072781

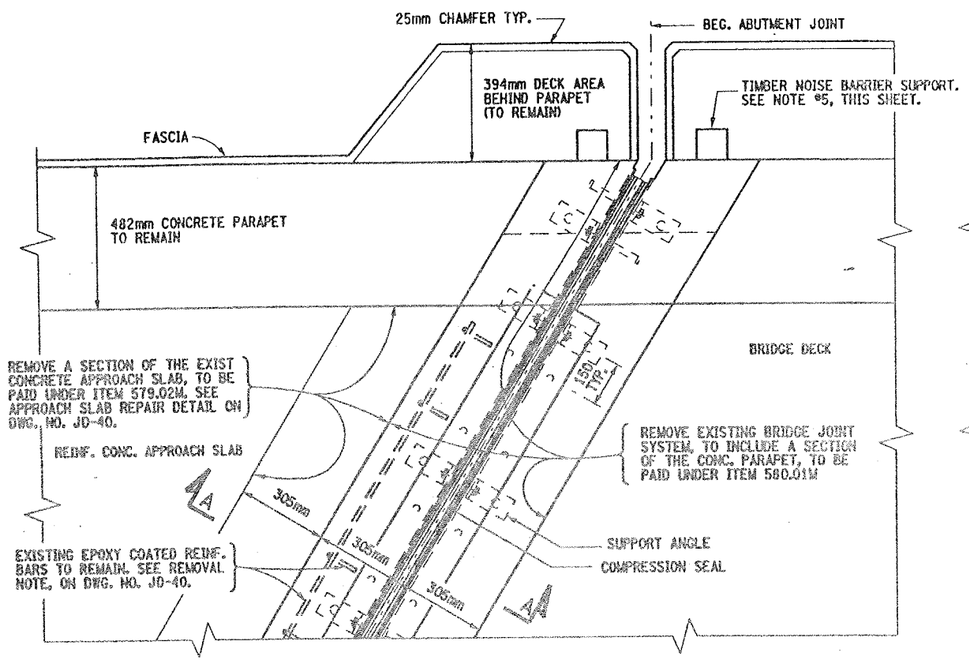

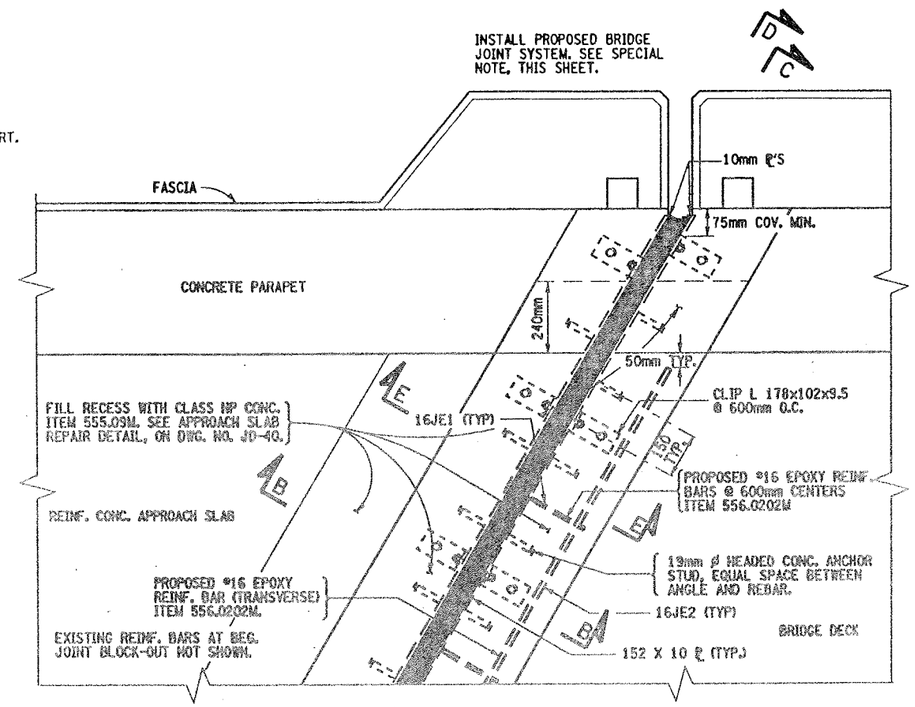

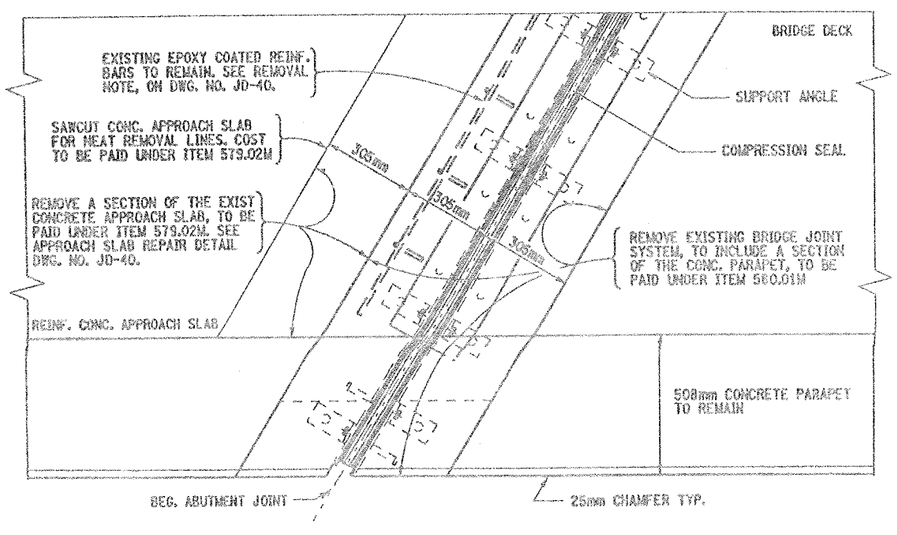

EXISTING ABUTMENT JOINT PLAN VIEW

BIN 1072781 - BEG. ABUT. SHOWN
END ABUT. SIMILAR

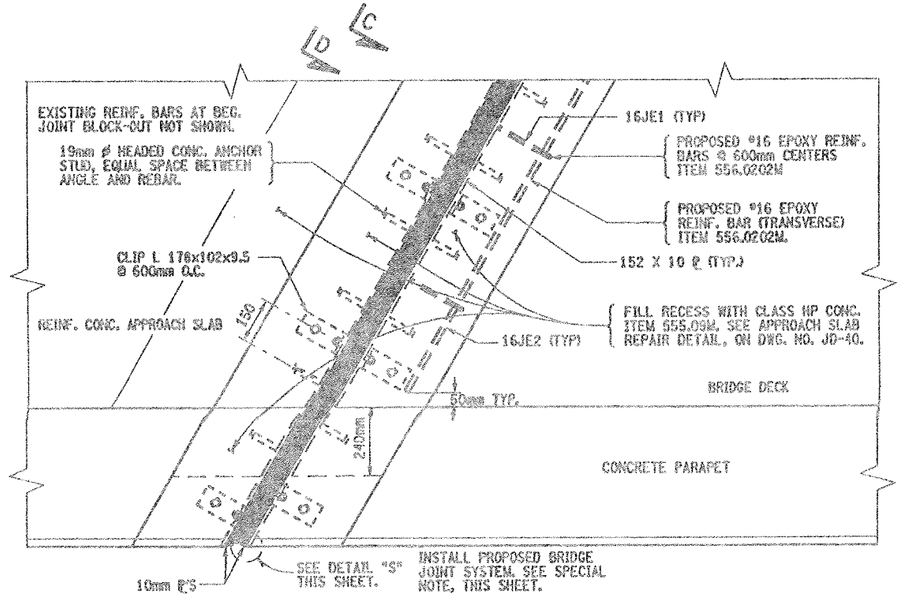

PROPOSED ABUTMENT JOINT PLAN VIEW

BIN 1072781 - BEG. ABUT. SHOWN
END ABUT. SIMILAR

NOTES:

1. REFER TO DWG. NO. JD-1 FOR PROPOSED JOINT DETAILS AND ALL NOTES SHALL APPLY.
2. FOR SECTION VIEWS SEE DWG. NO. JD-40.
3. REFER TO DWG. NO. JT-2 FOR PROPOSED BRIDGE JOINT INSTALLATION LOCATIONS.
4. THE STRUCTURE HAS A 16°-26'-24" SKEW ANGLE.
5. THE SOUTH FASCIA (LEFT SIDE) PARAPET HAS A TIMBER NOISE BARRIER ATTACHED TO THE BACK SIDE OF THE PARAPET. THIS TIMBER NOISE BARRIER TO REMAIN, IT MAY BE NECESSARY TO TEMPERARILY REMOVE THE SUPPORT BRACKETS TO FACILITATE INSTALLATION OF THE PROPOSED BRIDGE JOINT.

   ANY ADDITIONAL SUPPORT TO THE TIMBER NOISE BARRIER DEEMED NECESSARY BY THE ENGINEER, DURING THIS REMOVAL OF THE SUPPORT BRACKETS SHALL BE INCLUDED IN THE PRICE BID FOR ITEM 580.01M.

SPECIAL NOTE:

BIN 1072781 - INSTALL ITEM 567.31M AT BEG. ABUT. JOINT
INSTALL ITEM 567.35M AT END ABUT. JOINT.

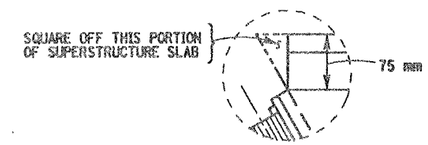

DETAIL "S"
NOT TO SCALE

ITEMS USED:

ITEM 555.09M	- STRUCT. CONCRETE, CLASS "HP" (CM)
ITEM 556.0202M	- EPOXY-COATED BAR REINF. FOR STRUCT. (Kg)
ITEM 567.31M	- MOD. ARM. JOINT SYSTEM W/COMP. SEAL TYPE A-1 (M)
ITEM 567.35M	- MOD. ARM. JOINT SYSTEM W/COMP. SEAL TYPE A-5 (M)
ITEM 579.02M	- REINFORCED BAR EXPOSURE (SM)
ITEM 580.01M	- REMOVAL OF STRUCT. CONCRETE (CM)

ALL DIMENSIONS ARE IN mm UNLESS OTHERWISE NOTED

AS BUILT REVISIONS

SIGNATURE DATE

INTERSTATE 481 SB
OVER
TOTMAN ROAD
BRIDGE JOINT DETAILS

STATE OF NEW YORK
DEPARTMENT OF TRANSPORTATION

FILENAME	REGION	DATE	DRAWING NO.
305613AJJA1	3	10/02	JD-39

DESIGN SUPERVISOR ____ JOB MANAGER ____ DESIGNED BY ____ CHECKED BY ____ ESTIMATED BY ____ DRAFTED BY ____ CHECKED BY ____

FED ROAD REG. NO.	STATE	CONTRACT NO.	SHEET NO.	TOTAL SHEETS
1	N.Y.	D259214	404	432

BRIDGE REHABILITATION PROJECT (ELEMENT SPECIFIC)
VARIOUS BRIDGES ON INTERSTATE 481
TOWNS OF DEWITT AND CICERO
ONONDAGA COUNTY
P.I.N. 305613 B.I.N. 1072781

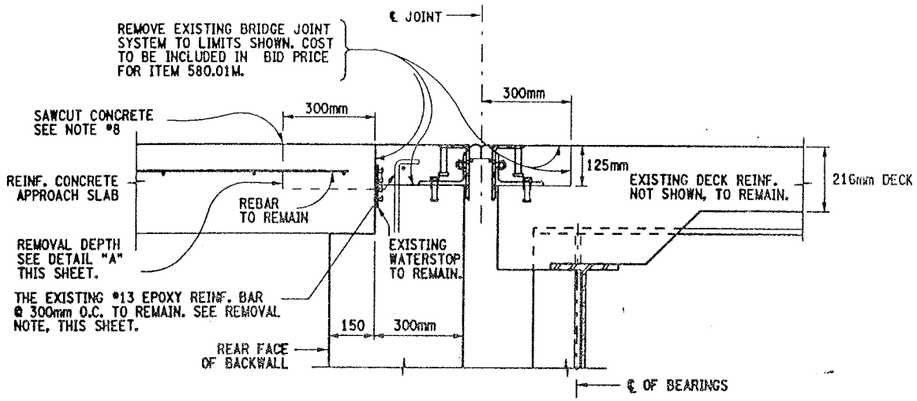

SECTION A-A
EXISTING ABUTMENT JOINT
NOT TO SCALE

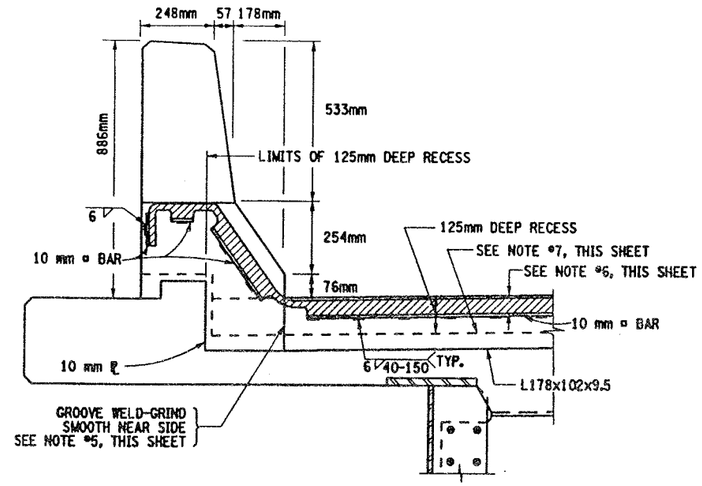

PROPOSED ABUTMENT JOINT
SECTION C-C (CONCRETE TRAFFIC BARRIER)
(REFER TO DWG. NO. JD-42 FOR OPPOSITE FASCIA DETAIL)
NOTE, CONCRETE ITEMS DIFFER.
NOT TO SCALE

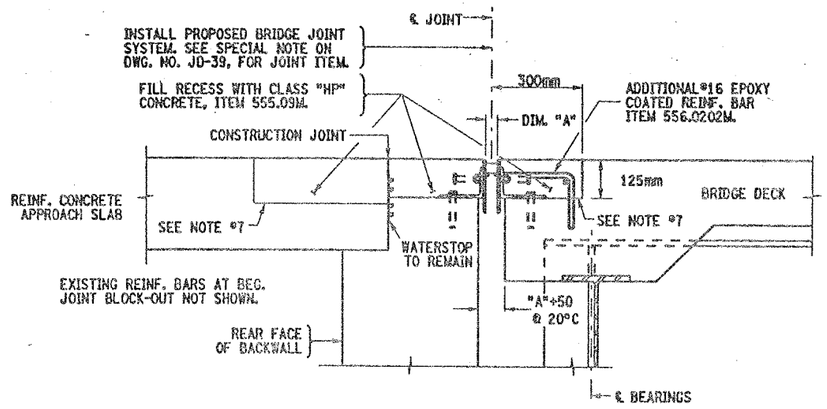

PROPOSED ABUTMENT JOINT
SECTION B-B
NOT TO SCALE

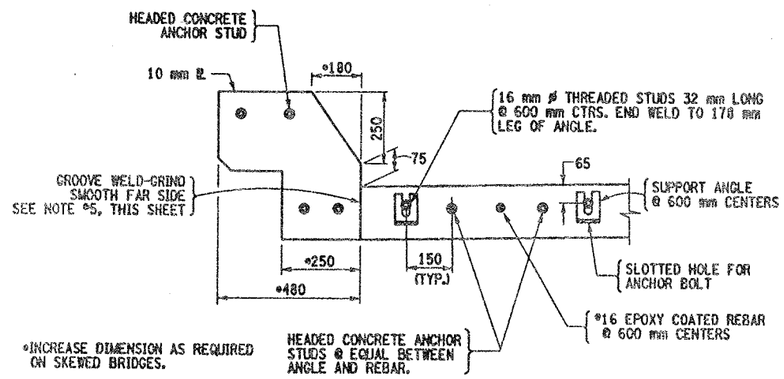

PROPOSED ABUTMENT JOINT
SECTION D-D (CONCRETE TRAFFIC BARRIER)
(ONLY THE STEEL SHOWN)

REMOVAL NOTE:

EXISTING EPOXY COATED REINF. BARS ENCOUNTERED AT THE JOINT BLOCK-OUTS, SHALL REMAIN. CARE SHALL BE TAKEN DURING REMOVAL OPERATIONS, NOT TO DAMAGE THE REINFORCEMENT BARS.

PRIOR TO PLACEMENT OF NEW CONCRETE THE EXISTING EPOXY BARS SHALL BE CLEANED AND ANY FIELD REPAIRS DEEMED NECESSARY BY THE ENGINEER, BE MADE AS PER SECTION 556-3.02(C) OF STANDARD SPECIFICATIONS. TO BE INCLUDED IN PRICE BID FOR ITEM 580.01M.

NOTES:

1. ACTUAL BRIDGE JOINT BLOCK-OUT DIMENSIONS MAY VARY. REMOVAL LIMITS SHALL BE TO EXISTING BLOCK-OUT LOCATIONS, AOBE.
2. EXISTING WATERSTOPS SHALL REMAIN.
3. FOR CALCULATION OF "A" DIMENSION REFER TO DWG. NO. JD-1.
4. REFER TO DWG. NO. JD-39 FOR PROPOSED PARTIAL PLAN VIEWS.
5. ALL WELDS SHALL BE GROUND SMOOTH TO THE SATISFACTION OF THE ENGINEER, ON SEAL CONTACT SIDE OF EDGE BEAM.
6. THIS DEPTH SHALL BE INDICATED ON THE SHOP DRAWINGS AND SHALL BE SUCH THAT WHEN THE SEAL IS COMPRESSED TO 50% OF ITS NOMINAL WIDTH, THE TOP OF THE SEAL SHALL BE NOT LESS THAN 6 mm NOR MORE THAN 19 mm BELOW THE TOP OF ROADWAY.
7. RECESSES RECEIVING ITEM 555.09M, AFTER SURFACE PREPARATION, THOROUGHLY WET THE CONCRETE SURFACES AND ALL POROUS SURFACES TO BE IN CONTACT WITH NEW CONCRETE FOR 12 HOURS. NOTE, THE USE OF MATERIAL SPECIF. 705-22 PORTLAND CEMENT MORTAR BONDING GROUT HAS BEEN ELIMINATED, (PROJECT PROPOSAL).
8. SAWCUT CONCRETE APPROACH SLAB TO PRODUCE NEAT REMOVAL LINES, COST BE TO INCLUDED IN PRICE BID FOR ITEM 579.02M.
9. THE CONCRETE REMOVAL AT THE APPROACH SLAB SHALL CONFORM TO STANDARD SPECIF. 579-3.02, TO BE PAID UNDER ITEM 579.02M. (AT APPROACH SLABS ONLY)

ITEMS USED:

ITEM 555.09M - STRUCT. CONCRETE, CLASS "HP" (CM)
ITEM 556.0202M - EPOXY-COATED BAR REINF. FOR STRUCT. (Kg)
ITEM 579.02M - REINFORCED BAR EXPOSURE (SM)
ITEM 580.01M - REMOVAL OF STRUCT. CONCRETE (CM)

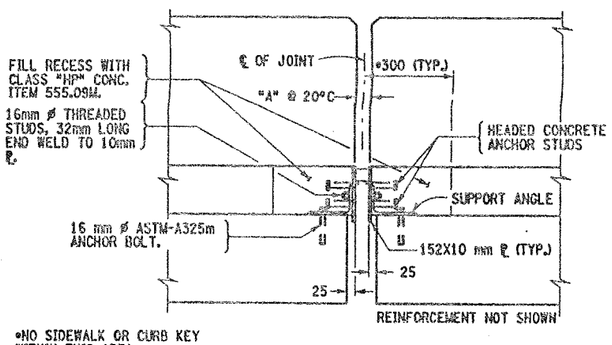

PROPOSED PIER JOINT
SECTION E-E
NOT TO SCALE

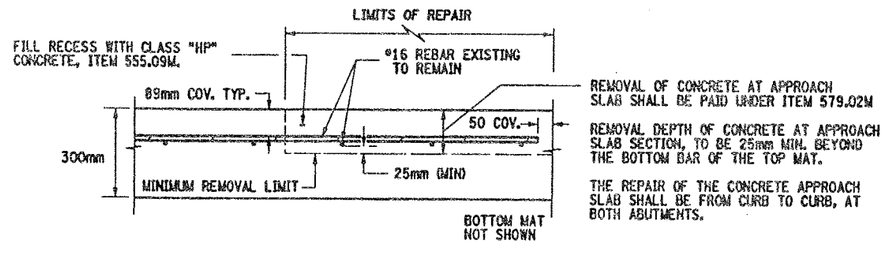

APPROACH SLAB REPAIR
DETAIL "A"
NOT TO SCALE

ALL DIMENSIONS ARE IN mm UNLESS OTHERWISE NOTED

AS BUILT REVISIONS

SIGNATURE DATE

INTERSTATE 481 SB
OVER
TOTMAN ROAD
BRIDGE JOINT DETAILS

STATE OF NEW YORK
DEPARTMENT OF TRANSPORTATION

FILENAME	REGION	DATE	DRAWING NO.
305613AJJA1	3	10/02	JD-40

DESIGN SUPERVISOR ____ JOB MANAGER ____ DESIGNED BY ____ CHECKED BY ____ ESTIMATED BY ____ DRAFTED BY ____ CHECKED BY ____

Asbestos Sampling Survey

Location:

BIN 1072781
Interstate Route I-481 South Bound
over Totman Road

Prepared for:

New York State
Department of Transportation

PIN 3056.13.111

LaBella Project No. 201001

August 2001

Table of Contents

Page

I. Project Summary 1

II. Site Description 1

III. Inspection Procedures 1

IV. Results 2

Certification 2

Figures and Table

I. Project Summary

In accordance with conditions of Term Agreement D012606, LaBella Associates, P.C. conducted an asbestos sampling survey of the Interstate Route I-481 south bound bridge over Totman Road. Based on laboratory analyses of bulk samples collected, no asbestos-containing materials were identified.

II. Site Description

The Site is located in Onondaga County, New York. For the purpose of this report, the Site consists of the Interstate Route I-481 south bound bridge over Totman Road. (See attached FIGURE 1 - Site Location Map).

III. Inspection Procedures

The following procedures were used to obtain the data for this Report:

A. A review of record drawings supplied by Region 3 personnel and a visual inspection of the subject structure were conducted to identify potential visible/accessible sources of asbestos-containing materials. Observations and notes were made to provide a description of the structure, and an estimate of the approximate amount, length, or area of ACM present.

B. Physical or operational constraints, which might affect the removal of the ACM, were identified and reported.

C. Bulk samples of suspected ACM were collected during the site inspection of the subject structure. Samples were taken from each homogeneous area that may contain ACM.

D. Samples were submitted for analysis. Preliminary PLM analyses of NOB materials were performed by LaBella Laboratories, a NYSDOH approved laboratory, to determine the presence and percentage of asbestos in each sample. TEM analyses of NOB materials, if necessary, were performed by AMA Analytical, Inc.

E. Lab results were used to determine the approximate location, type, and amount of the verified ACM.

F. A drawing of the structure at the Site was created, in order to show sample locations and the approximate locations and amounts of confirmed ACM observed in accessible locations.

Only accessible areas were inspected. Inaccessible areas, such as areas within the bridge or the approaches to the bridge were not included in this inspection. No investigation was conducted by LaBella Associates to determine the presence of underground utilities on or in the immediate vicinity of the Site. Actual sample locations are shown in the attached FIGURE 2. Results of bulk sample analyses are tabulated in the attached TABLE.

IV. Results

BIN 1072781 Interstate Route I-481 South Bound over Totman Road

Based on laboratory analyses of bulk samples collected, no asbestos-containing materials were identified.

Certification

LaBella Associates, P.C. certifies the accuracy of this report, to the best of our knowledge, based on the information collected as described in the Inspection Procedures Section of this investigation.

Figures & Table

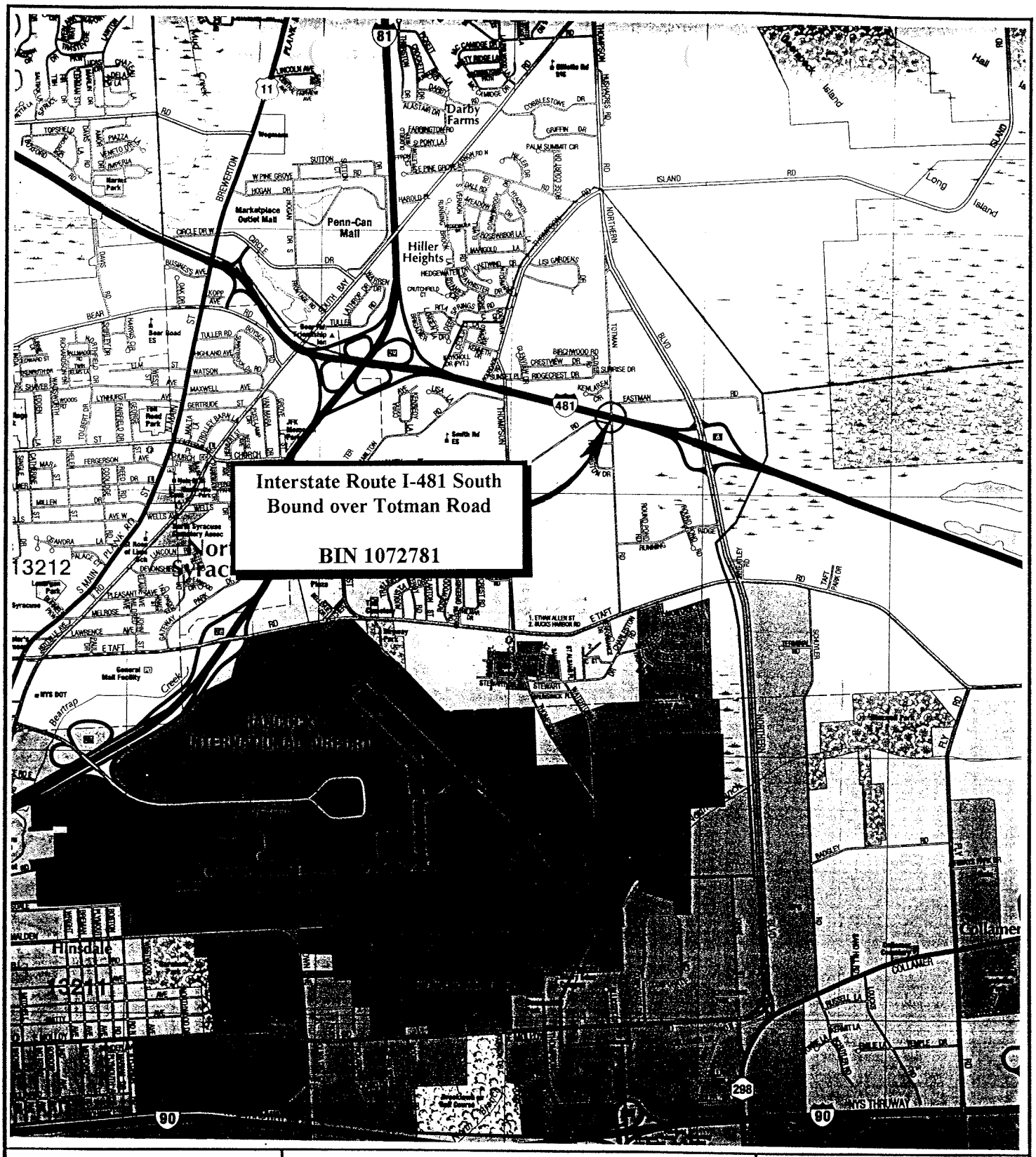

N

FIGURE 1
Site Location Map

Interstate Route I-481 South Bound over Totman Road
Onondaga County, New York

LABELLA

PROJECT NO. 201001

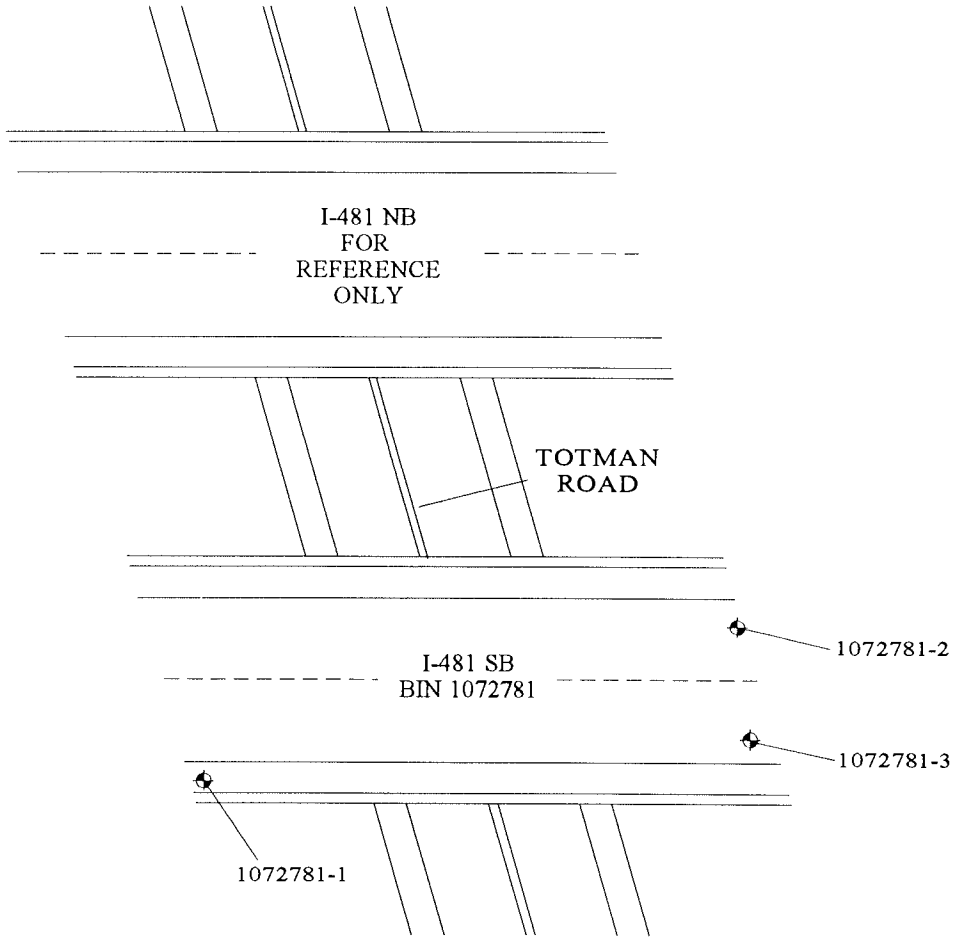

NOTE: NO ASBESTOS-CONTAINING MATERIALS IDENTIFIED.

LEGEND

1072781-1 SAMPLE LOCATION

NORTH	PROJECT TITLE: ASBESTOS SAMPLING SURVEY 19 BRIDGES ALONG INTERSTATE I-481 ONONDAGA COUNTY, NEW YORK	PROJECT NO. 201001 PIN 3056.13.111
	FIGURE TITLE: FIGURE 2 BIN 1072781 I-481 SB OVER TOTMAN ROAD SAMPLE LOCATIONS & CONFIRMED ACM	NOT TO SCALE DATE: AUGUST, 2001

Bulk Sample Results Table

Asbestos Sampling Survey
BIN 1072781
Interstate Route I-481 South Bound
over Totman Road
Onondaga County, New York
LaBella Project # 201001
PIN 3056.13.111

Sample #	Sample Location	Type of Material	Results % Asbestos	Amount of Material	Specification Item No.
1072781-1	West End of Bridge at Base of Fence	Gray Caulking Compound	None Detected	N/A	N/A
1072781-2	East End of Bridge Beneath Bearing	Bearing Pad	None Detected	N/A	N/A
1072781-3	East End of Bridge on Back Wall	Gray Masonry Coating	None Detected	N/A	N/A

Watts
Architects
&Engineers

BIN 1072791

I-481 SB over Thompson Road

BIN 1072791
Location: I-481 SB over Thompson Road

NYSDOT D031085 PIN 3501.60 - I-81 Viaduct Replacement or New Urban Arterial
City of Syracuse, Onondaga County
Bridge Asbestos Assessment Results

No asbestos containing materials have been identified on this bridge.

The following summarizes the results of the most recent asbestos survey and record plan review.

Watts Inspection Findings (December 2013)

A bridge inspection was completed on 12/11/2013 and the following suspect ACMs were identified and sampled:

- Bearing pad
- Grey masonry paint
- Grey expansion joint caulk

The sampled materials were not positive for asbestos, per laboratory analytical results.

Review of Historic Plans and Previous Asbestos Survey Information

- Record plans (D250416, D259214) were reviewed in support of the field survey. There were no suspect ACMs identified.
- A previous asbestos survey competed by LaBella in 2001 was reviewed in support of this project. No asbestos containing materials were identified.

No additional suspect ACM sampling has been identified for BIN 1072791.

Watts Architecture & Engineering

BRIDGE ASBESTOS FIELD INSPECTION FORM

BIN Number/Location: 1072791 (481 SB over Thompson Rd) **Inspection Date:** 12/11/14

Project Name: : I-81 Viaduct Replacement or New Urban Arterial **PIN Number:** PIN: 3501.60, D031085

Inspector(s): W. Koch **Watts Project No:** 13092

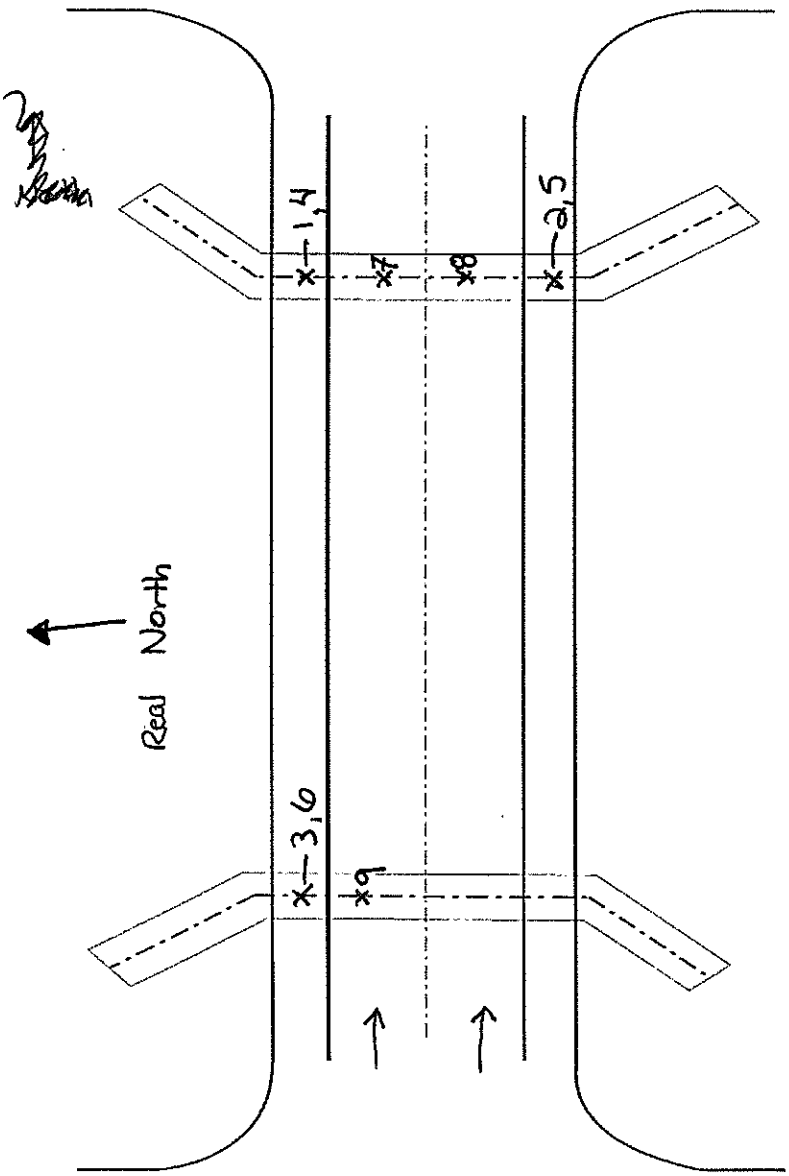

SAMPLE LOCATION PLAN VIEW - N.T.S.

Field Inspection Checklist Item	Investigated	Present	Sampled	
Girder Paint	☒	☐	☐	
Truss Paint	☒	☐	☐	
Abutment Coating	☐	☐	☒	4-6
Abutment Caulk	☒	☐	☐	
Abut. Exp. Jt. Filler	☐	☐	☒	7-9
Headwall Sheet Packing	☒	☐	☐	
Bearing Pad	☐	☐	☒	1-3
Transite Pipe	☒	☐	☐	
Pipe Coating/Wtr. Proof	☒	☐	☐	
Scupper Wtr. Proof	☒	☐	☐	
Dum Dum Paint	☒	☐	☐	
Deck Caulk	☒	☐	☐	
Deck Exp. Jt. Filler	☒	☐	☐	
Approach Sheet Packing	☒	☐	☐	
Railing Paint	☒	☐	☐	
Railing Caulk	☒	☐	☐	
Sidewalk Caulk	☒	☐	☐	
Lighting Pole Caulk	☒	☐	☐	
Masonry Castings	☒	☐	☐	
Miscellaneous Tar	☒	☐	☐	
Utilities	☒	☐	☐	
Other _____	☐	☐	☐	
Other _____	☐	☐	☐	
Other _____	☐	☐	☐	
Other _____	☐	☐	☐	
Other _____	☐	☐	☐	

Notes: Grey caulk in exp. joints sampled
No paint found on steel under deck
Bearing pad sampled
No sheet packing

EMSL Analytical, Inc.
490 Rowley Road, Depew, NY 14043
Phone/Fax: (716) 651-0030 / (716) 651-0394
http://www.EMSL.com buffalolab@emsl.com

EMSL Order:	141400418
CustomerID:	WATT50A
CustomerPO:	
ProjectID:	

Attn: **Scott Matthews**
Watts Architecture & Engineering
2610 Salina Street
Syracuse, NY 13205

Phone:	(315) 443-8611
Fax:	(315) 443-8605
Received:	02/04/14 10:00 AM
Analysis Date:	2/9/2014
Collected:	12/11/2013

Project: **13092 - 181 Viaduct Replacement or New Urban Arterial Bin 1072791 - 481 B Over Thompson Rd**

Test Report:Asbestos Analysis of Bulk Material

Test	Analyzed Date	Color	Non Asbestos Fibrous	Non Asbestos Non-Fibrous	Asbestos
Sample ID 1072791-1 *141400418-0001*		**Description**	bearing pad		
		Homogeneity	Homogeneous		
PLM NYS 198.1 Friable					**Not Analyzed**
PLM NYS 198.6 VCM					**Not Analyzed**
PLM NYS 198.6 NOB	2/7/2014	Black			**Inconclusive: None Detected**
TEM NYS 198.4 NOB	2/9/2014	Black			**None Detected**
Sample ID 1072791-2 *141400418-0002*		**Description**	bearing pad		
		Homogeneity	Homogeneous		
PLM NYS 198.1 Friable					**Not Analyzed**
PLM NYS 198.6 VCM					**Not Analyzed**
PLM NYS 198.6 NOB	2/7/2014	Black			**Inconclusive: None Detected**
TEM NYS 198.4 NOB	2/9/2014	Black			**None Detected**
Sample ID 1072791-3 *141400418-0003*		**Description**	bearing pad		
		Homogeneity	Homogeneous		
PLM NYS 198.1 Friable					**Not Analyzed**
PLM NYS 198.6 VCM					**Not Analyzed**
PLM NYS 198.6 NOB	2/7/2014	Black			**Inconclusive: None Detected**
TEM NYS 198.4 NOB	2/9/2014	Black			**None Detected**
Sample ID 1072791-4 *141400418-0004*		**Description**	grey masonry paint		
		Homogeneity	Homogeneous		
PLM NYS 198.1 Friable					**Not Analyzed**
PLM NYS 198.6 VCM					**Not Analyzed**
PLM NYS 198.6 NOB	2/7/2014	Gray			**Inconclusive: None Detected**
TEM NYS 198.4 NOB	2/9/2014	Gray			**None Detected**
Sample ID 1072791-5 *141400418-0005*		**Description**	grey masonry paint		
		Homogeneity	Homogeneous		
PLM NYS 198.1 Friable					**Not Analyzed**
PLM NYS 198.6 VCM					**Not Analyzed**
PLM NYS 198.6 NOB	2/7/2014	Gray			**Inconclusive: None Detected**
TEM NYS 198.4 NOB	2/9/2014	Gray			**None Detected**

Initial Report From 02/09/2014 18:30:48

EMSL Analytical, Inc.
490 Rowley Road, Depew, NY 14043
Phone/Fax: (716) 651-0030 / (716) 651-0394
http://www.EMSL.com buffalolab@emsl.com

EMSL Order:	141400418
CustomerID:	WATT50A
CustomerPO:	
ProjectID:	

Test Report:Asbestos Analysis of Bulk Material

Test			Color	Fibrous	Non Asbestos Non-Fibrous	Asbestos
Sample ID	1072791-6		**Description**	grey masonry paint		
	141400418-0006		**Homogeneity**	Homogeneous		
PLM NYS 198.1 Friable						**Not Analyzed**
PLM NYS 198.6 VCM						**Not Analyzed**
PLM NYS 198.6 NOB		2/7/2014	Gray			**Inconclusive: None Detected**
TEM NYS 198.4 NOB		2/9/2014	Gray			**None Detected**
Sample ID	1072791-7		**Description**	grey expansion joint caulk		
	141400418-0007		**Homogeneity**	Homogeneous		
PLM NYS 198.1 Friable						**Not Analyzed**
PLM NYS 198.6 VCM						**Not Analyzed**
PLM NYS 198.6 NOB		2/7/2014	Gray			**Inconclusive: None Detected**
TEM NYS 198.4 NOB		2/9/2014	Gray			**None Detected**
Sample ID	1072791-8		**Description**	grey expansion joint caulk		
	141400418-0008		**Homogeneity**	Homogeneous		
PLM NYS 198.1 Friable						**Not Analyzed**
PLM NYS 198.6 VCM						**Not Analyzed**
PLM NYS 198.6 NOB		2/7/2014	Gray			**Inconclusive: None Detected**
TEM NYS 198.4 NOB		2/9/2014	Gray			**None Detected**
Sample ID	1072791-9		**Description**	grey expansion joint caulk		
	141400418-0009		**Homogeneity**	Homogeneous		
PLM NYS 198.1 Friable						**Not Analyzed**
PLM NYS 198.6 VCM						**Not Analyzed**
PLM NYS 198.6 NOB		2/7/2014	Gray			**Inconclusive: None Detected**
TEM NYS 198.4 NOB		2/9/2014	Gray			**None Detected**

Analyst(s)
Rachel Giese
Rhonda McGee

Rhonda McGee

Rhonda McGee, Laboratory Manager
or other approved signatory

NOB = Non Friable Organically Bound N/A = Not Applicable VCM = Vermiculite Containing Material

-In New York State, TEM is currently the only method that can be used to determine if NOB materials can be considered or treated as non-asbestos containing.
All samples examined for the presence of vermiculite when analyzed via NYS 198.1.
-NYS Guidelines for Vermiculite containing samples are available at http://www.wadsworth.org/labcert/elapcert/forms/VermiculiteInterimGuidance_Rev070913.pdf
EMSL maintains liability limited to cost of analysis. This report relates only to the samples reported above and may not be reproduced, except in full, without written approval by EMSL. EMSL bears no responsibility for sample collection activities or analytical method limitations. Interpretation and use of test results are the responsibility of the client. Samples were received in good condition unless otherwise noted.
This report must not be used by the client to claim product certification, approval, or endorsement by NVLAP, NIST, or any agency of the federal government. This report may contain data that is not covered by the NVLAP accreditation.

Samples analyzed by EMSL Analytical, Inc. Depew, NY NYS ELAP 11606

Initial Report From 02/09/2014 18:30:48

141400418

WATTS ARCHITECTURE & ENGINEERING, P.C.
ASBESTOS BULK SAMPLE CHAIN-OF-CUSTODY

Page: 1 of 1
Date: 12/11/13

Client: C&S / DOT
Watts Project No.: 13092
Project: 181 Viaduct Replacement or New Urban Arterial
Turnaround Requested: ___ 3 Hr. ___ 48 Hr.
Building / Location: BIN 1072791 (481 SB over Thompson Rd)
Analysis Requested: ___ 6 Hr. ___ 72 Hr.
Contact: Scott Matthews at (315) 443-8611
PLM X TEM X 12 Hr. X ~~5 Day~~ 1 week
Email Preliminary Results to: smatthews@watts-ae.com
24 Hr. ___ 6-10 Day
rm 2/4/14

Mail Invoice to: Accounts Payable
Watts Architecture & Engineering, P.C.
95 Perry Street, Buffalo, NY 14203

Mail Report to: Scott Matthews
Watts Architecture & Engineering, P.C.
2610 S Salina Street, Syracuse, NY 13210

Sample Number	Material Description	Sample Location	Laboratory Results PLM	Laboratory Results TEM
1072791- 1	Bearing pad	East side of bridge		
2	" "	East side of bridge		
3	" "	West side of bridge		
4	Grey masonry paint	East side of bridge		
5	" "	East side of bridge		
6	" "	West side of bridge		
7	Grey expansion joint caulk	East exp. joint		
8	" "	East exp. joint		
9	" "	West exp. joint		

Sampled By: Scott Matthews / Will Koch Date: 2-3-14 Received By: Date:
Relinquished By: Scott Matthews to FedEx Date: Received By: Date:
Comments:

RECEIVED FEB 04 2014 BY: 109 Fedex

C:\Documents and Settings\smatthews\Desktop\BulkForm.xls
12/2/2013

OrderID: 141400415

Watts
Architects
&Engineers

BIN 1072791 Inspection Photos

I-481 SB over Thompson Road

Photo 1

Photo 2

Photo 3

Photo 4

1072791 S.B

D250416

V R. Engle (TY) 11-12-98

FED. RD. REG. NO.	STATE	FEDERAL AID PROJECT NO.	SHEET NO.	TOTAL SHEETS
	NEW YORK	IR-81-2(154)	278	380

INTERSTATE RTE. 570 EXTENSION (I-481)
NORTHERN BLVD. TO BEAR ROAD INTERCHANGE
ONONDAGA COUNTY

CAPITAL PROJECT IDENTIFICATION NO. [illegible]

1072791
SB

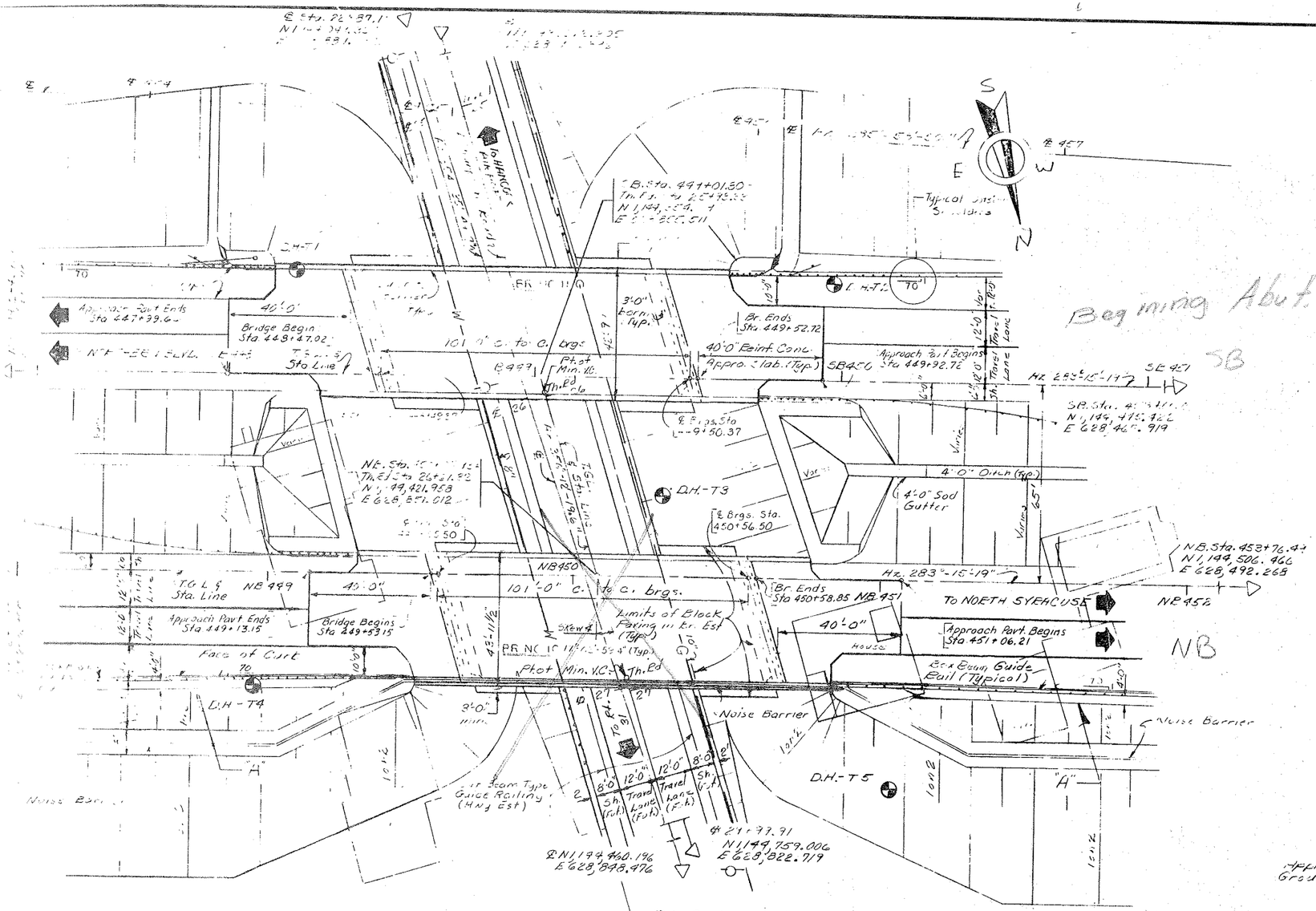

PLAN
SCALE 1"=20'-0"

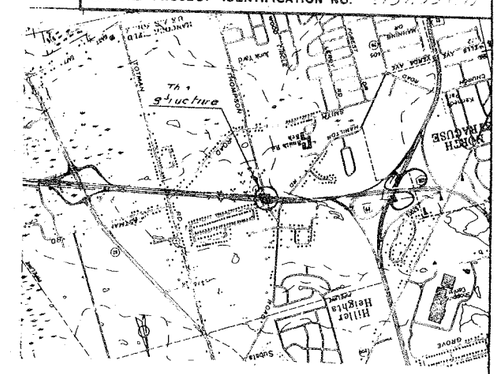

LOCATION MAP
SCALE 1" = 2000'
CLOSED QUADRANGLE

BIN 1072791 (Br. 11) & BIN 1072792 (Br. 10)	
INVENTORY RATING	OPERATING RATING
HS 23(42T)(W.S.)	HS 47(85T)(W.S.)

The ratings shown are based on the use of the Type 2 Form System - See Dwg. No. 21 of 38.

TEAM LEADER B Gulla
DATE 5/87
FIELD VERIFIED V Peter Fichlman 11/17/88.
Opalter 12/4/90
P.J.R. 11/92
Opalter 10/25/94

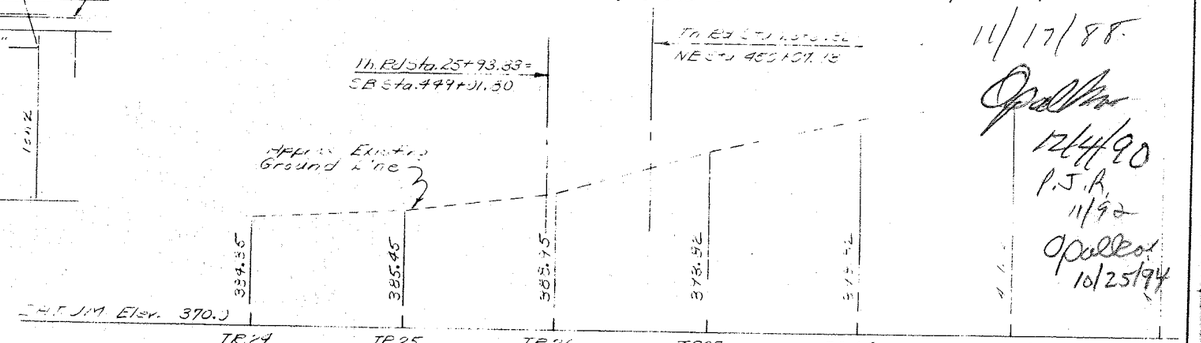

EXISTING THOMPSON RD. PROFILE
SCALE Horiz 1"=20' Vert 1"=5'

V Douglas R. Hillesa 10/16/96
B Opalter 11/91
V Francis Cook 10/91

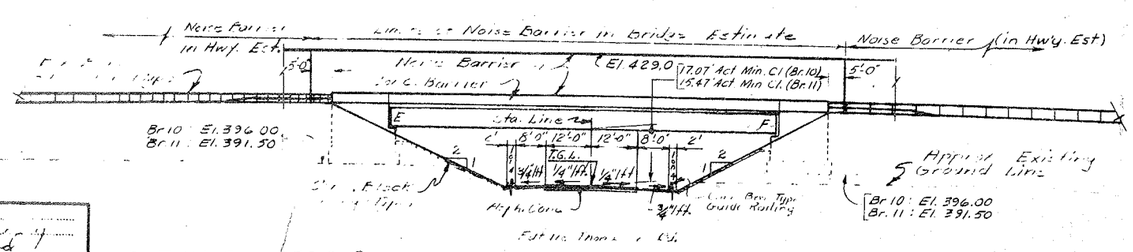

ELEVATION "AA"
SCALE 1"=20'-0"

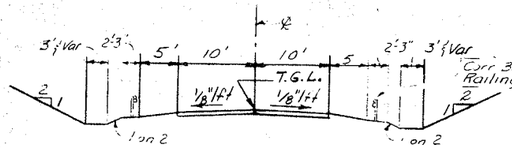

EXISTING THOMPSON RD.
SCALE 1"=10'-0"

Indicates Error

MADE.....
ECT ENGINEER.....
ARGE OF.....
NED BY.....
N CHECKED BY.....
LED BY.....
L CHECKED BY.....
-182

STATE OF NEW YORK
DEPARTMENT OF TRANSPORTATION
STRUCTURES DESIGN & CONSTRUCTION DIVISION

Bridges X & 11 over Thompson Rd.

PLAN, ELEVATION, PROFILE AND SECTION

D250416

FED. RD. REG. NO.	STATE	FEDERAL AID PROJECT NO.	SHEET NO.	TOTAL SHEETS
	NEW YORK	(BR-81-2(154)) (BR-81-2(154))	284	380

INTERSTATE RTE. 570 EXTENSION (I-481)
NORTHERN BLVD. TO BEAR ROAD INTERCHANGE
ONONDAGA COUNTY

CAPITAL PROJECT IDENTIFICATION NO. 3107.00 (01)

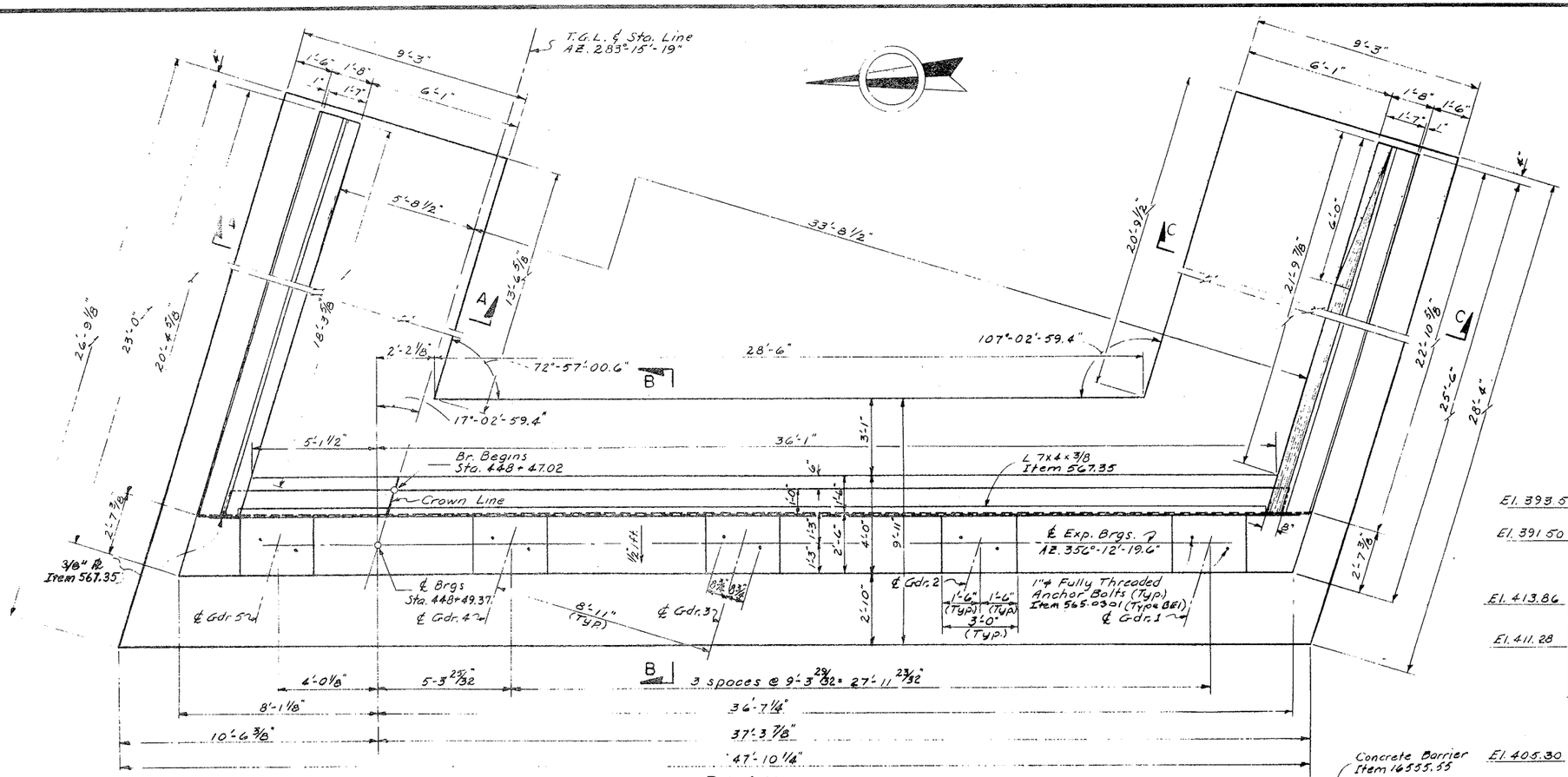

PLAN
Scale: 3/8" = 1'-0"

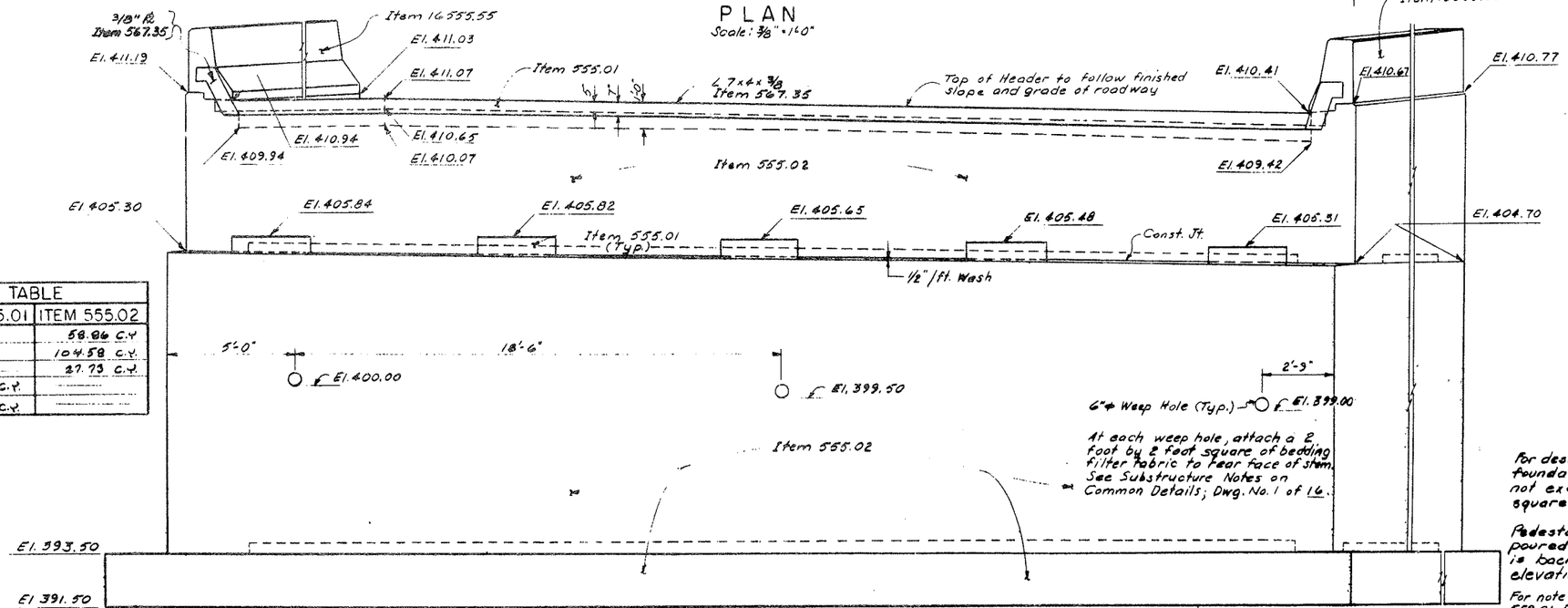

ELEVATION
Scale: 3/8" = 1'-0"

CONCRETE TABLE		
POUP	ITEM 555.01	ITEM 555.02
Footing		58.86 C.Y.
Lower Stem		104.58 C.Y.
Upper Stem		27.73 C.Y.
Header	0.66 C.Y.	
Pedestals	0.93 C.Y.	

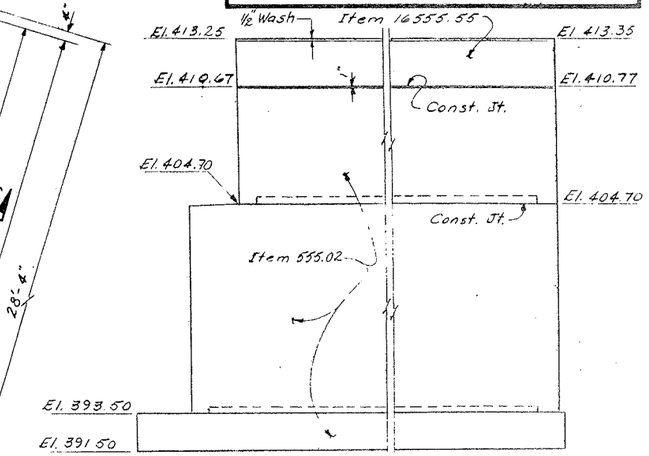

S.E. WINGWALL
Scale: 1/4" = 1'-0"

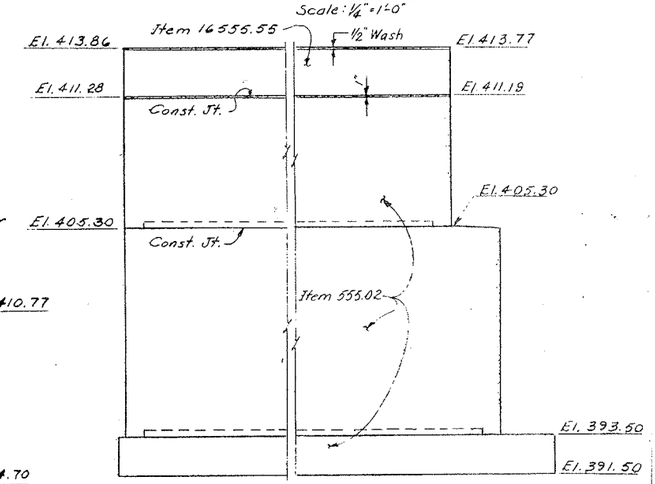

N.E. WINGWALL
Scale: 1/4" = 1'-0"

For Sections A-A thru C-C, see Dwg. No. 9 of 38

For Keyway Details, see Dwg. No. 9 of 38

For Concrete Barrier Details, see Dwg. No. 9 of 38

For details of Bearings, Item 565.0301, see Dwg. No. 3 of 16; Common Details.

For details of Armored Joint System, Item 567.35, see Dwg. No. 19 of 38.

For design purposes, the foundation pressure does not exceed 2 1/2 Tons per square foot.

Pedestals shall not be poured untill the Abutment is backfilled to subgrade elevation.

For note on application of Item 559.01, Epoxy Protective Coating, see Common Details, Dwg. No. 1 of 16.

STATE OF NEW YORK
DEPARTMENT OF TRANSPORTATION
STRUCTURES DESIGN AND CONSTRUCTION DIVISION

Bridge 11 over Thompson Rd.

EAST ABUTMENT - BRIDGE 11

PREP. BY: [illegible] DATE MADE
SCALE: [illegible] DRAWING NO. 7 OF 38

D250416

FED. RD. REG. NO.	STATE	FEDERAL AID PROJECT NO.	SHEET NO.	TOTAL SHEETS
	NEW YORK	IR-81-2(182)	287	380

INTERSTATE RTE. 570 EXTENSION (I-481)
NORTHERN BLVD. TO BEAR ROAD INTERCHANGE
ONONDAGA COUNTY

CAPITAL PROJECT IDENTIFICATION NO 3107.00 (01)

CONCRETE TABLE		
POUR	ITEM 555.01	ITEM 555.02
Footing	------	56.97 c.y.
Lower Stem	------	99.24 c.y.
Upper Stem	------	32.76 c.y.
Header	0.66 c.y.	------
Pedestals	0.93 c.y.	------

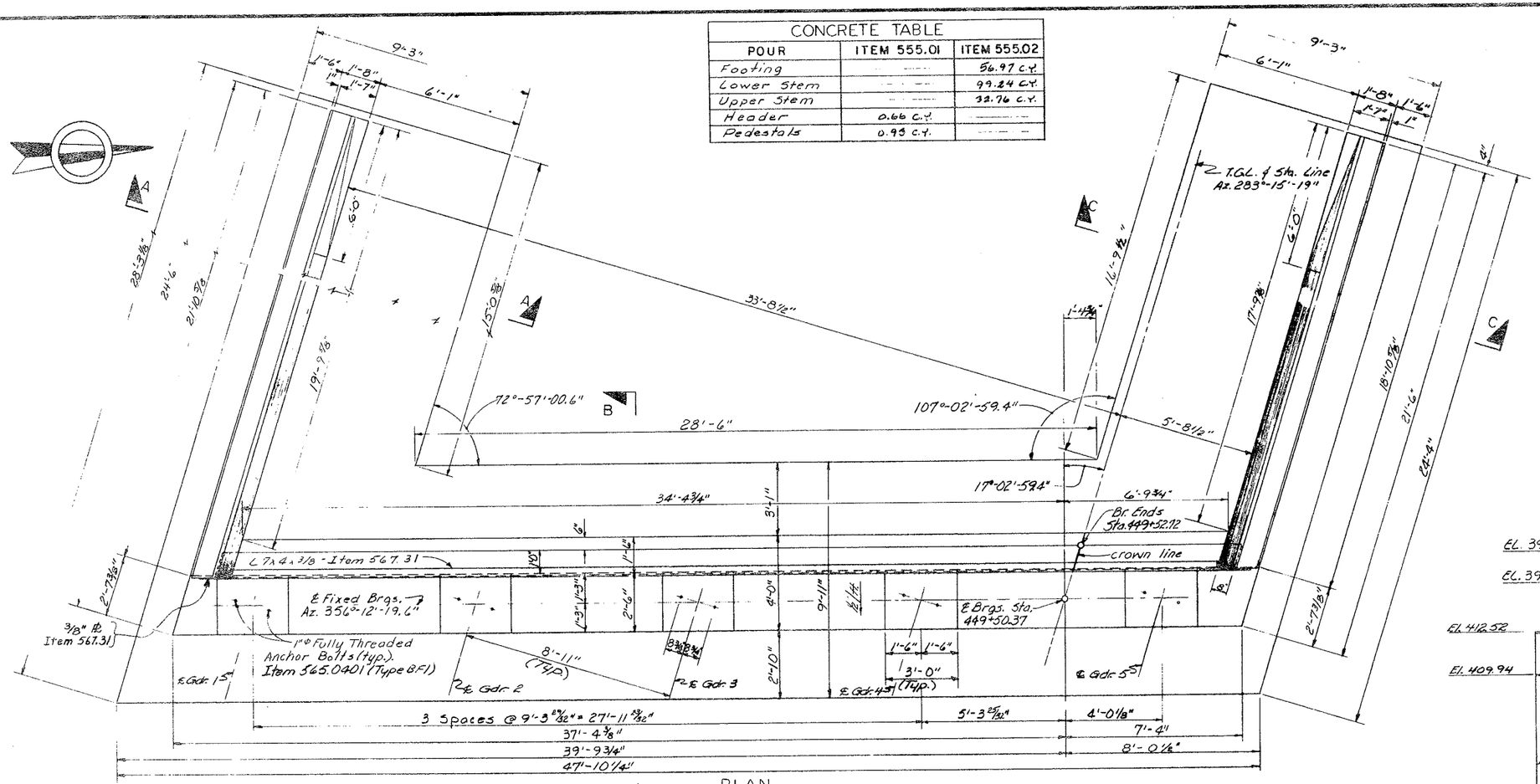

PLAN
Scale: 3/8" = 1'-0"

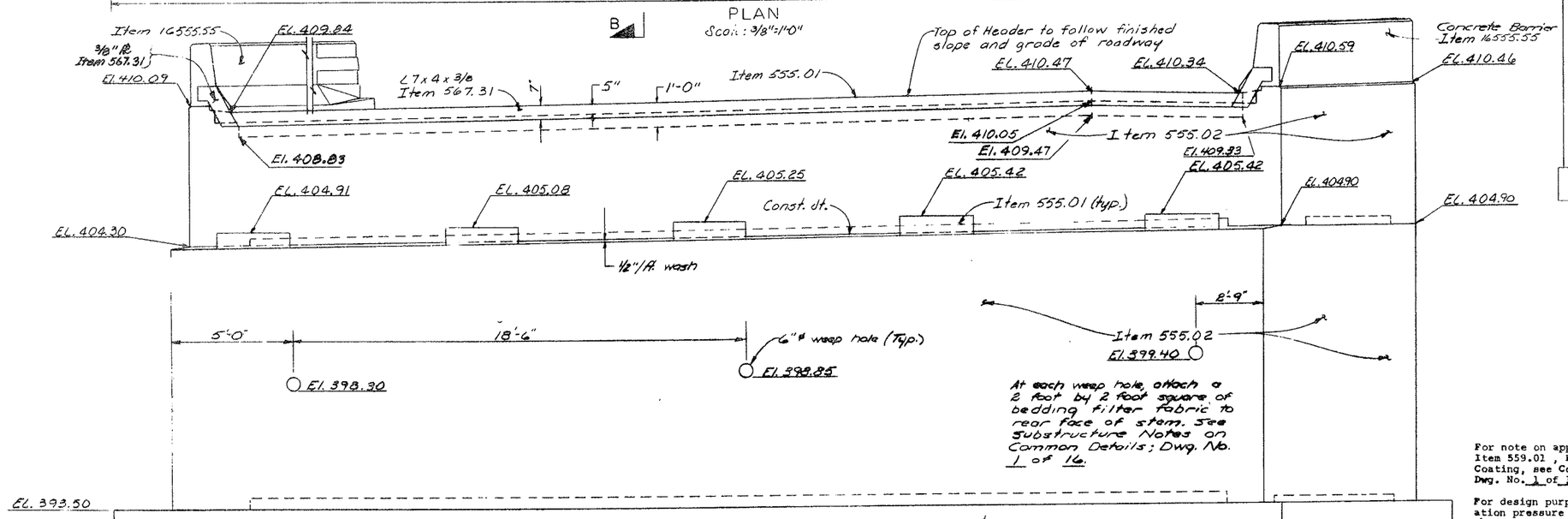

At each weep hole, attach a 2 foot by 2 foot square of bedding filter fabric to rear face of stem. See Substructure Notes on Common Details; Dwg. No. 1 of 16.

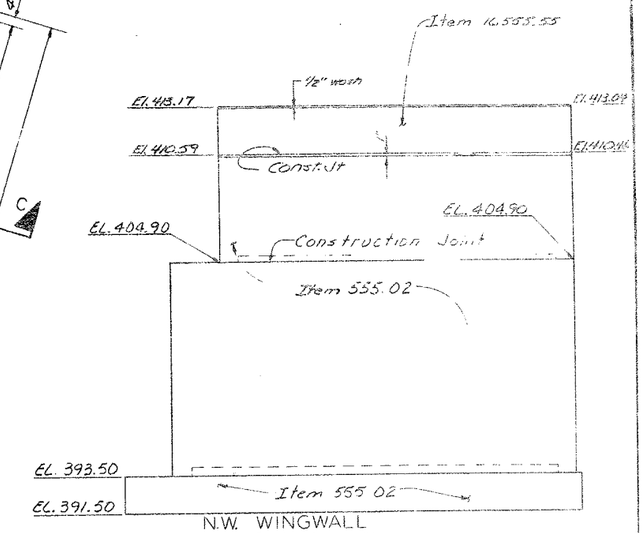

N.W. WINGWALL
Scale: 1/4" = 1'-0"

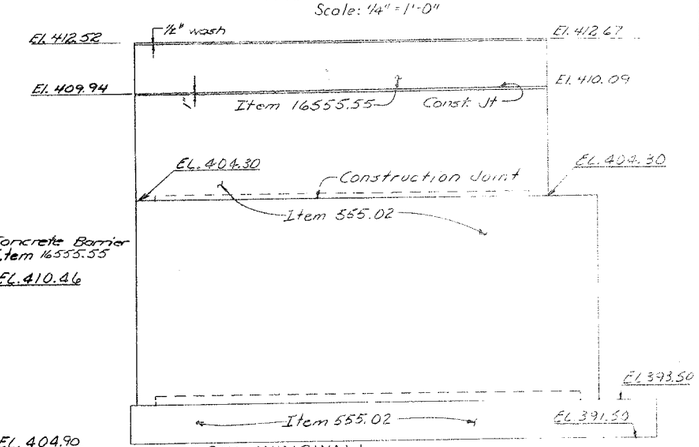

S.W. WINGWALL
Scale: 1/4" = 1'-0"

For Sections A-A thru C-C, see Dwg. No. 12 of 38.

For Keyway Details, see Dwg. No. 9 of 38.

For Concrete Barrier Details, see Dwg. No 11 of 38.

For details of bearing anchor bolts, see Dwg No 3 of 16 of the Common Details.

For details of Armored Joint System, Item 567.31, see Dwg. No. 19 of 38.

For note on application of Item 559.01, Epoxy Protective Coating, see Common Details; Dwg. No. 1 of 16.

For design purposes, the foundation pressure does not exceed

STATE OF NEW YORK
DEPARTMENT OF TRANSPORTATION
STRUCTURES DESIGN AND CONSTRUCTION DIVISION

Bridge 11 over Thompson Rd.

D250416

FED. RD. REG. NO.	STATE	FEDERAL AID PROJECT NO.	SHEET NO.	TOTAL SHEETS
	NEW YORK	IB-81-2(154)	298	38

INTERSTATE RTE. 570 EXTENSION (I-481)
NORTHERN BLVD. TO BEAR ROAD INTERCHANGE
ONONDAGA COUNTY

CAPITAL PROJECT IDENTIFICATION NO. 3107.00 (01)

GIRDER TABLE										
GIRDER	DECK FORM TYPE**	TOP FLANGE			BOTTOM FLANGE					WEB "W"
		PL A	PL B	PL C	PL D	PL E	PL F	PL G	PL H	
1-5	~~1~~	16"x1 1/8"	16"x3/4"	16"x3/4"	16"x2"	16"x3/4"	16"x1 1/2"	16"x1 1/2"	16"x3/4"	44"x1/2"
6-9	1	17"x1 1/8"	17"x3/4"	17"x3/4"	17"x2"	17"x3/4"	17"x1 1/2"	17"x1 1/2"	17"x3/4"	44"x1/2"
10		17"x1 1/4"	17"x3/4"	17"x3/4"	17"x2"	17"x3/4"	17"x1 1/2"	17"x1 1/2"	17"x3/4"	44"x9/16"
1-5	2	16"x1 1/8"	16"x3/4"	16"x3/4"	17"x2"	17"x3/4"	17"x1 1/2"	17"x1 1/2"	17"x3/4"	44"x1/2"
6-9	2	17"x1 1/8"	17"x3/4"	17"x3/4"	18"x2"	18"x3/4"	18"x1 1/2"	18"x1 1/2"	18"x3/4"	44"x1/2"
10	2	17"x1 1/4"	17"x3/4"	17"x3/4"	18"x2"	18"x3/4"	18"x1 1/2"	18"x1 1/2"	18"x3/4"	44"x9/16"

** Type 1 Forms are removable or integral prestressed concrete.
Type 2 Forms are permanent corrugated metal.

* F.P.G.W. = Full Penetration Groove Weld
M.B. = Mill to Bear

STUD SHEAR CONNECTOR SPACING - ITEM 556.03		
GIRDER	SPACING	TOTAL STUDS
1-5	6" ⌀ 110 sp. (111 pairs) @ 11" = 100'-10" 6"	1110
6-9	6" ⌀ 134 sp (135 pairs) @ 9" = 100'-6" 8"	1080
10	6" ⌀ 110 sp. (111 pairs) @ 11" = 100'-10" 6"	222

End of Girder

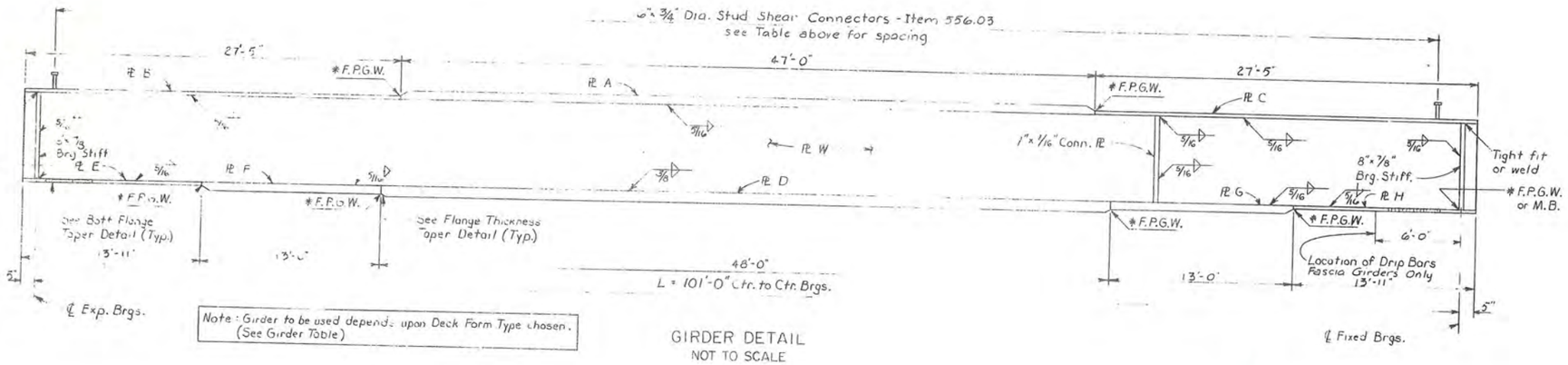

Note: Girder to be used depends upon Deck Form Type chosen. (See Girder Table)

GIRDER DETAIL
NOT TO SCALE

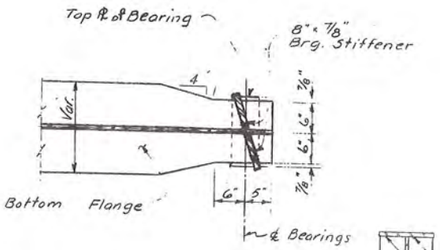

BOTTOM FLANGE TAPER
Not to Scale

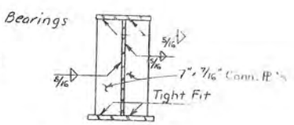

CONN PL - IN PAIRS

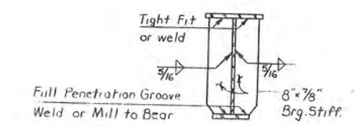

BRG STIFF.

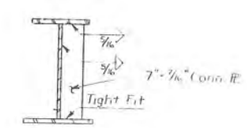

CONN PL - USED SINGLY

GIRDER SECTIONS
NOT TO SCALE

CAMBER TABLE		0.1L	0.2L	0.3L	0.4L	0.5L	0.6L	0.7L	0.8L	0.9L
GIRDER 1-5	I VERTICAL CURVE (FT)	.01	.01	.02	.02	.02	.02	.02	.02	.01
	II STEEL D.L. (FT)	.02	.04	.05	.06	.06	.06	.05	.04	.02
	III CONCRETE D.L. (FT.)	.09	.17	.23	.27	.28	.27	.23	.17	.09
	IV SUPERIMPOSED D.L. (FT.)	.02	.03	.04	.05	.05	.05	.04	.03	.02
	TOTAL (FT.)	.14	.25	.34	.40	.41	.40	.34	.26	.14
GIRDER 6-9	I VERTICAL CURVE (FT.)	.01	.02	.02	.03	.03	.03	.02	.02	.01
	II STEEL D.L. (FT.)	.02	.04	.05	.06	.06	.06	.05	.04	.02
	III CONCRETE D.L. (FT.)	.09	.16	.23	.26	.28	.26	.23	.16	.09
	IV SUPERIMPOSED D.L. (FT.)	.02	.03	.04	.05	.05	.05	.04	.03	.02
	TOTAL (FT.)	.14	.25	.34	.40	.42	.40	.34	.25	.14
GIRDER 10	I VERTICAL CURVE (FT.)	.01	.02	.02	.02	.02	.03	.02	.01	.01
	II STEEL D.L. (FT.)	.02	.04	.05	.06	.06	.06	.05	.04	.02
	III CONCRETE D.L. (FT.)	.08	.16	.21	.25	.26	.25	.21	.16	.08
	IV SUPERIMPOSED D.L. (FT.)	.03	.06	.08	.09	.10	.09	.08	.06	.03
	TOTAL (FT.)	.14	.28	.36	.42	.44	.43	.36	.27	.14

Note: Tables of Camber, Design Load & Moment and Shear are based upon use of the girder which would be used with Deck Form Type 2. (See Girder Table above.)

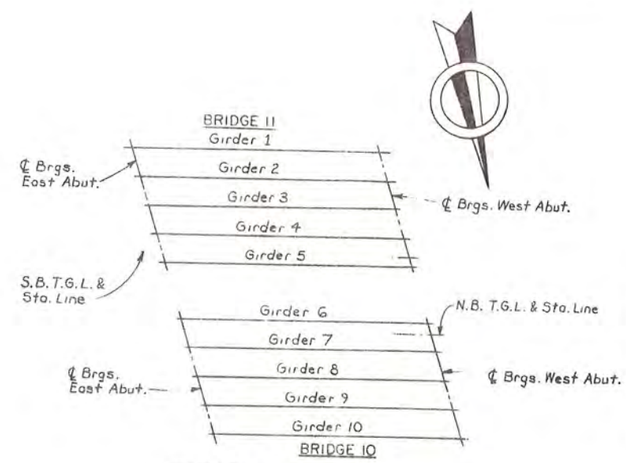

GIRDER LAYOUT
NOT TO SCALE

CAMBER NOTES

1. The camber labeled "Vertical Curve" in the table is the camber required to follow the vertical curve.
2. The camber labelad "Steel D.L." in the table is the camber required to offset the deflection due to the dead load weight of the girder as fabricated.
3. The camber labeled "Concrete D.L." in the table is the camber required to offset the deflection due to the dead load weight of the concrete slab.
4. The camber labeled "Superimposed D.L." in the table is the camber required to offset the deflection due to the weight of the curb, sidewalk, railing and future wearing surface.
5. The total camber is the sum of vertical curve, steel dead load, concrete dead load and superimposed dead load. All camber offsets are measured vertically to the top of web from a straight reference line drawn from the intersection of top of web and centerline of bearing at one end of the girder to the corresponding point at the other end of the girder.
6. Positive numbers in the table are above the straight reference line.
7. Negative numbers in the table are below the straight reference line.
8. The camber offsets are tabulated in decimals of a foot.

For Superstructure Notes, see Common Details; Dwg No. 1 of 16.

All structural steel shall be ASTM A583 steel, unpainted.

For Stud Shear Connector Details, see Common Details; Dwg. No. 5 of 16.

For details of Flange Thickness Taper, see Common Details; Dwg. No. 5 of 16.

The ends of girders and bearing stiffeners shall be vertical. All conn. PL's may be perpendicular to the top flange.

For layout of connection plates, see Dwg. No 22 of 38.

For Haunch detail, see Dwg. No. 23 of 38.

For Drip Bar Details, see Common Details; Dwg. No. 5 of 16.

MOMENT & SHEAR TABLE		GIRDER 1-5		GIRDER 6-9		GIRDER 10	
		℄ BRG.	MID. PT.	℄ BRG.	MID. PT.	℄ BRG.	MID. PT.
D.L	MOMENT		1758		1824	—	1844
	SHEAR	70	—	72		73	
S.D.L	MOMENT	—	456	—	456	—	887
	SHEAR	18	—	18	—	35	
L.L.	MOMENT	—	1526	—	1583		1380
	SHEAR	65	29	67	30	58	26

Shears are expressed as Kips. Live Load Moments and Shears include Impact.

Moments are expressed as Foot Kips.

DESIGN LOAD TABLE		GIRDER 1-5	GIRDER 6-9	GIRDER 10
	UNIT	LOAD / FT.	LOAD / FT.	LOAD / FT
D.L	SLAB	0.948 K/FT.	0.983 K/FT.	0.983 K/FT.
	HAUNCH	0.039 K/FT	0.042 K/FT.	0.042 K/FT.
	GIRDER	0.235 K/FT.	0.245 K/FT.	0.259 K/FT.
	S.I.P. FORMS	0.121 K/FT	0.125 K/FT.	0.125 K/FT.
	DIAPHRAGMS	0.040 K/FT.	0.040 K/FT.	0.040 K/FT.
	TOTAL	1.383 K/FT.	1.435 K/FT.	1.449 K/FT.
S.D.L	CONC BARRIER	0.200 K/FT	0.200 K/FT	0.200 K/FT.
	NOISE BARRIER			0.338 K/FT
	FUTURE W.S	0.158 K/FT.	0.158 K/FT.	0.158 K/FT
	TOTAL	0.358 K/FT	0.358 K/FT.	0.696 K/FT

Assumed Live Load = HS 20-44

STATE OF NEW YORK
DEPARTMENT OF TRANSPORTATION
STRUCTURES DESIGN AND CONSTRUCTION DIVISION

Bridges X & 11 over Thompson Rd.

GIRDER DETAILS, TABLES : CAMBER, MOMENT & SHEAR, AND DESIGN LOADS

PROJ. ENG. E.J. Barry
SQUAD
DATE MADE

DETAIL CHECKED BY S.P.H.

FED. RD. REG. NO.	STATE	FEDERAL AID PROJECT NO.
	NEW YORK	IR-81-2(154)

INTERSTATE RTE. 570 EXTENSION
NORTHERN BLVD. TO BEAR ROAD IN
ONONDAGA COUNTY

CAPITAL PROJECT IDENTIFICATION NO. 31

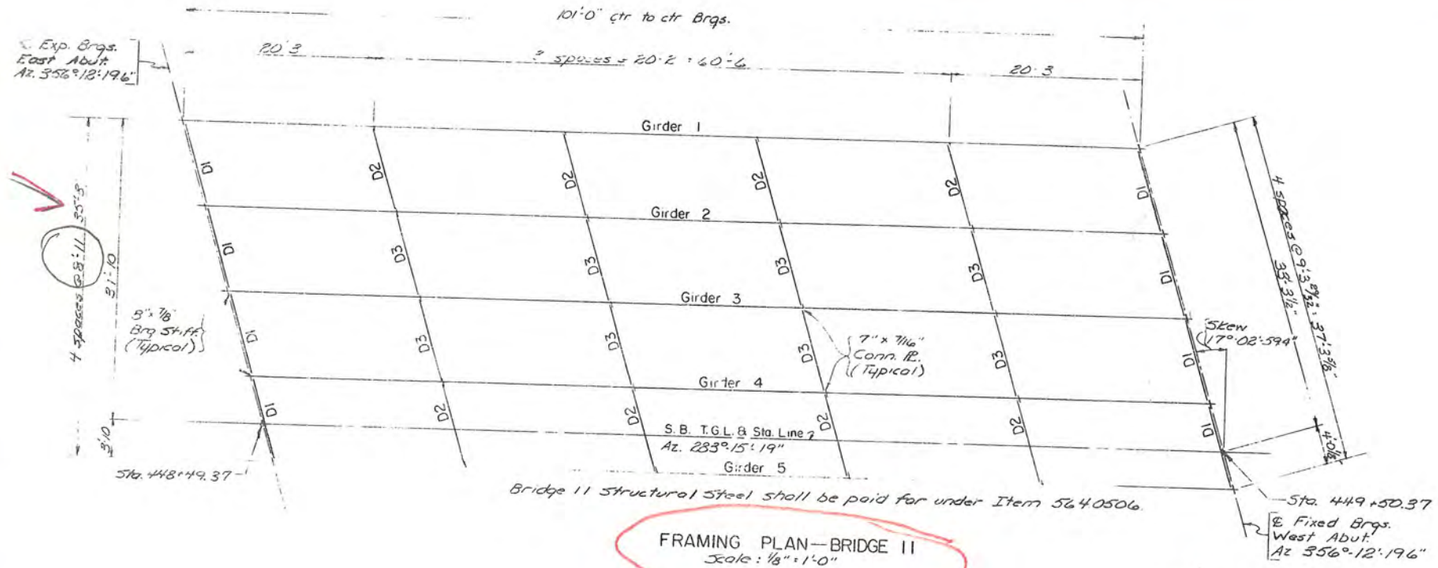

Bridge 11 structural steel shall be paid for under Item 5640506.

FRAMING PLAN—BRIDGE 11
Scale: 1/8" = 1'-0"

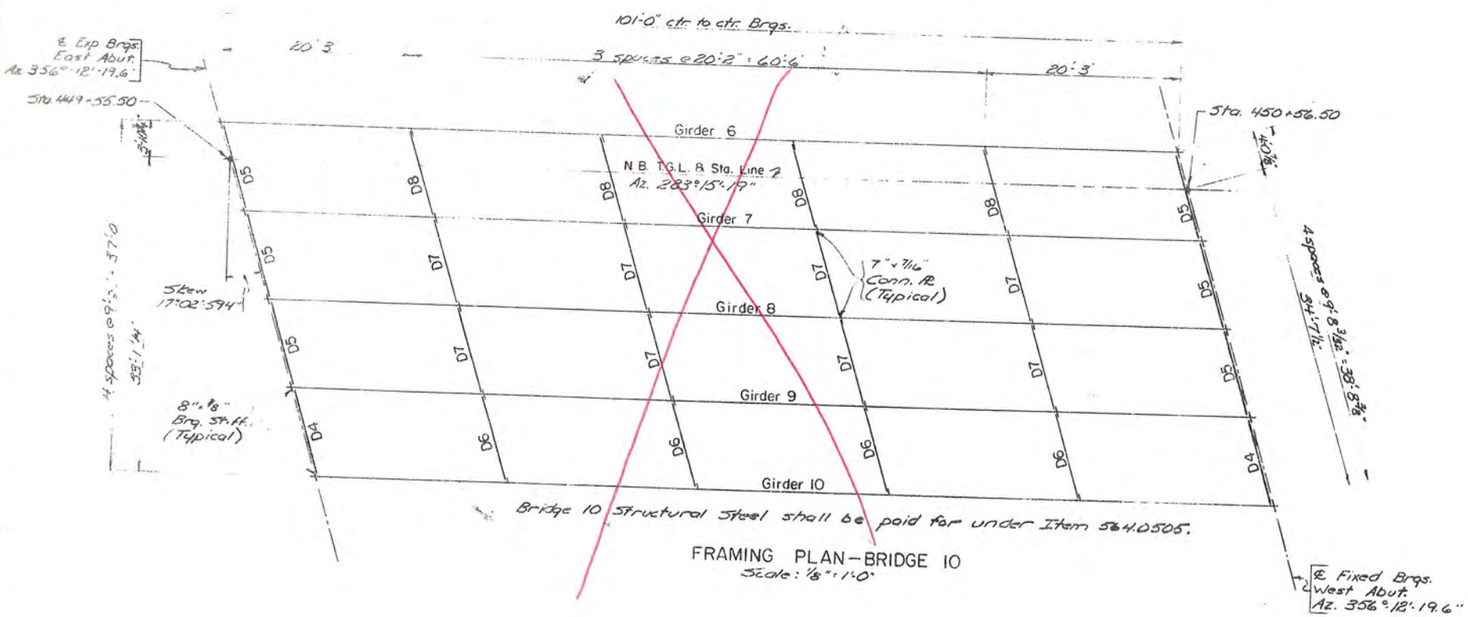

Bridge 10 structural steel shall be paid for under Item 5640505.

FRAMING PLAN—BRIDGE 10
Scale: 1/8" = 1'-0"

DESIGNED BY J. D. Lyle DESIGN CHECKED BY S.P.H. Wood DETAILED BY L. Sidwell DETAIL CHECKED BY

BD 1794 (7/69)

STATE OF NEW YORK
DEPARTMENT OF TRANSPORTATION
STRUCTURES DESIGN AND CONSTRUCTION

Bridges 10 & 11 over Thompson

FRAMING PLANS

PROJ. ENG. E. F. Barry DATE MADE

D25041

FED. RD. REG. NO.	STATE	FEDERAL AID PROJECT NO.	SHEET NO.	TOTAL SHEETS
	NEW YORK	(IR-81-2(154)) IR-81-2(154)	300	3

INTERSTATE RTE. 570 EXTENSION (I-481)
NORTHERN BLVD. TO BEAR ROAD INTERCHANGE
ONONDAGA COUNTY

CAPITAL PROJECT IDENTIFICATION NO. 3107.00 (01)

*Location of lap on alternate bars (See Dwg No. 25 of 38).

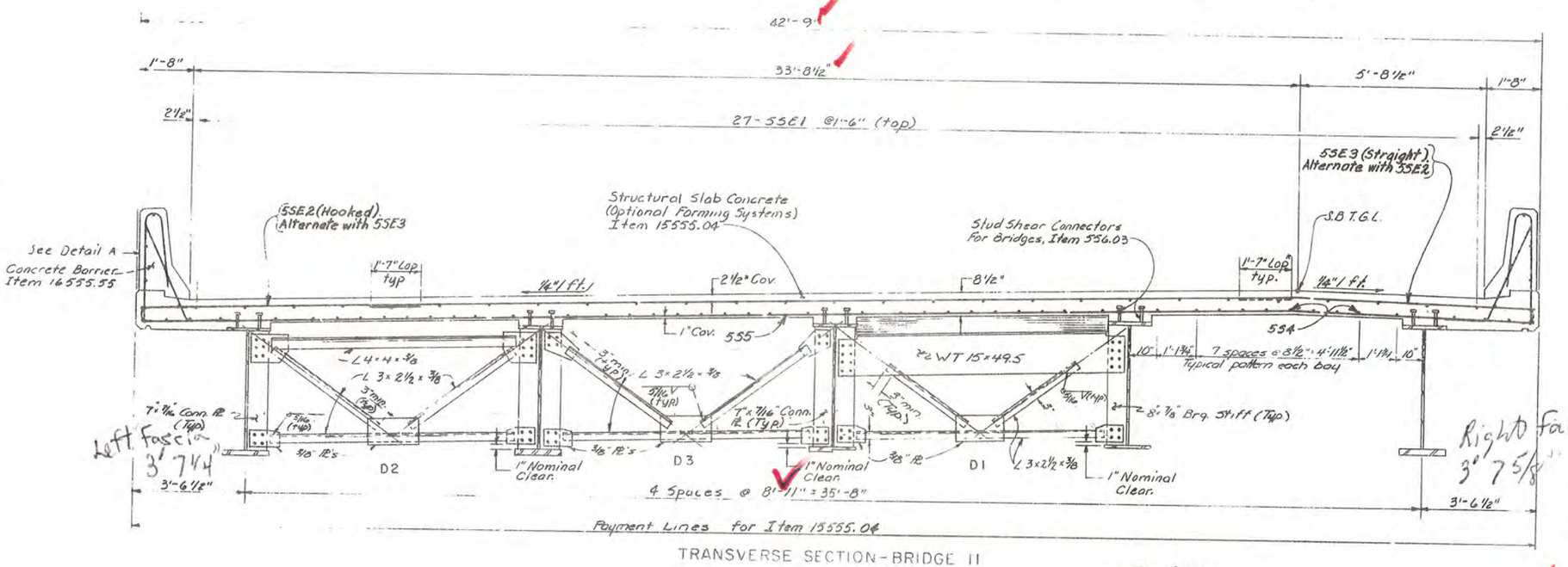

TRANSVERSE SECTION-BRIDGE 11
Scale: ½"=1'-0"

FASCIAE OVER HANG AVERAGES OUT 3'-6½"

DIAPHRAGM NOTES

1. Where holes are indicated, connections shall be made with 7/8" diameter high-strength bolts.
2. Cross frames may be fabricated to fit the girders in their erected position and cambered shape, but deflected vertically due to steel dead load only.
3. The Contractor may place diaphragms on either side of the bearing stiffeners or stiffener connection plates as necessary to correct alignment provided there will be no interference with other structural details.
4. Tapered or flat shim plates may be used in the connection between skewed diaphragms and the bearing stiffeners or stiffener connection plates. Variable thicknesses of shim plates may be used. The minimum thickness of shim plate shall be 1/8" with a maximum number of three shim plates permitted at any connection. The total thickness of all shim plates used at any connection shall not exceed 1". Shim plates shall have the dimensions of the faying surface. The shim material shall conform to ASTM Designation A36, except that on unpainted structures, the shim material shall conform to ASTM Designation A588. No additional payment will be made for furnishing and placing the shim plates.

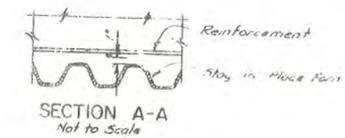

SECTION A-A
Not to Scale

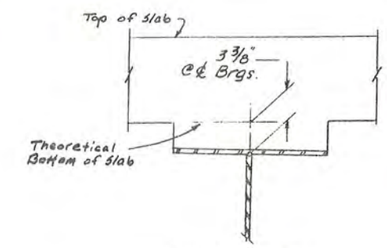

HAUNCH DETAIL
Not to Scale

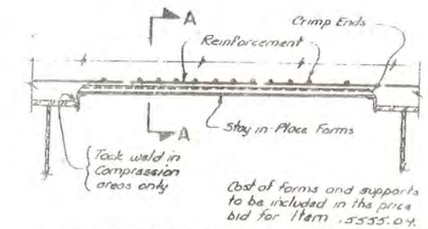

PERMANENT CORRUGATED METAL FORMS
(See "DECK FORM OPTIONS" note, Dwg. No 24 of 38)
Not to Scale

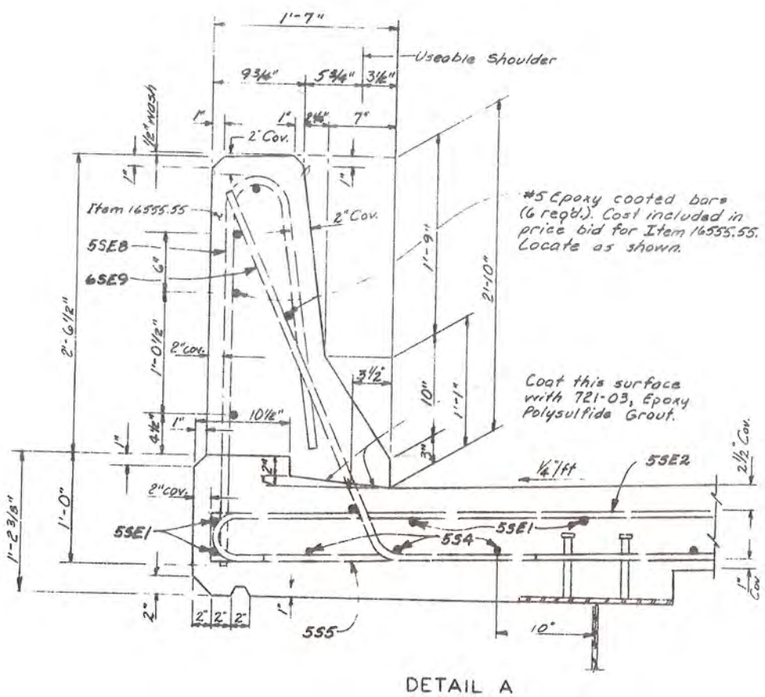

DETAIL A
Scale: 1½"=1'-0"

HAUNCH TABLE

BRIDGE 11		℄ BRG	0.1L	0.2L	0.3L	0.4L	0.5L	0.6L	0.7L	0.8L	0.9L	℄ BRG.
Girder 1	Ⓐ Req'd. bottom of slab elevation	409.74	409.69	409.64	409.59	409.53	409.48	409.42	409.36	409.30	409.24	409.17
	Ⓑ Top of steel El. (Field meas.)											
	Ⓒ = Ⓐ − Ⓑ											
	Ⓓ Concrete + S.D.L. Deflection	0	0.11	0.20	0.27	0.32	0.33	0.32	0.27	0.20	0.11	0
	Ⓔ Depth of haunch req'd. = Ⓒ + Ⓓ ft.											
Girder 2	Ⓐ Req'd. bottom of slab elevation	409.91	409.86	409.81	409.76	409.70	409.65	409.59	409.53	409.47	409.41	409.34
	Ⓑ Top of steel El. (Field meas.)											
	Ⓒ = Ⓐ − Ⓑ											
	Ⓓ Concrete + S.D.L. Deflection	0	0.11	0.20	0.27	0.32	0.33	0.32	0.27	0.20	0.11	0
	Ⓔ Depth of haunch req'd. = Ⓒ + Ⓓ ft.											
Girder 3	Ⓐ Req'd. bottom of slab elevation	410.08	410.03	409.98	409.93	409.87	409.82	409.76	409.70	409.64	409.57	409.51
	Ⓑ Top of steel El. (Field meas.)											
	Ⓒ = Ⓐ − Ⓑ											
	Ⓓ Concrete + S.D.L. Deflection	0	0.11	0.20	0.27	0.32	0.33	0.32	0.27	0.20	0.11	0
	Ⓔ Depth of haunch req'd. = Ⓒ + Ⓓ ft.											
Girder 4	Ⓐ Req'd. bottom of slab elevation	410.25	410.20	410.15	410.10	410.04	409.99	409.93	409.87	409.81	409.74	409.68
	Ⓑ Top of steel El. (Field meas.)											
	Ⓒ = Ⓐ − Ⓑ											
	Ⓓ Concrete + S.D.L. Deflection	0	0.11	0.20	0.27	0.32	0.33	0.32	0.27	0.20	0.11	0
	Ⓔ Depth of haunch req'd. = Ⓒ + Ⓓ ft.											
Girder 5	Ⓐ Req'd. bottom of slab elevation	410.27	410.22	410.16	410.11	410.05	410.00	409.94	409.88	409.81	409.75	409.68
	Ⓑ Top of steel El. (Field meas.)											
	Ⓒ = Ⓐ − Ⓑ											
	Ⓓ Concrete + S.D.L. Deflection	0	0.11	0.20	0.27	0.32	0.33	0.32	0.27	0.20	0.11	0
	Ⓔ Depth of haunch req'd. = Ⓒ + Ⓓ ft.											

Note: Computations in the Haunch Table shall be algebraic.

CONCRETE TABLE

POUR	ITEM 15555.04
Structural Slab	4417 S.F.

For "Deck Form Options" note, see Dwg. No. 24 of 38

NOTE:
Haunch Table is based upon use of the Girder which would be used with Deck Form Type 2. (See Girder Table; Dwg. No. 21 of 38.)

STATE OF NEW YORK
DEPARTMENT OF TRANSPORTATION
STRUCTURES DESIGN AND CONSTRUCTION DIVISION

Bridge 11 over Thompson Rd.

TRANSVERSE SECTION & HAUNCH TABLE
BRIDGE 11

PROJ. ENG. E. Berry
SQUAD

3/3 1072791

D259214

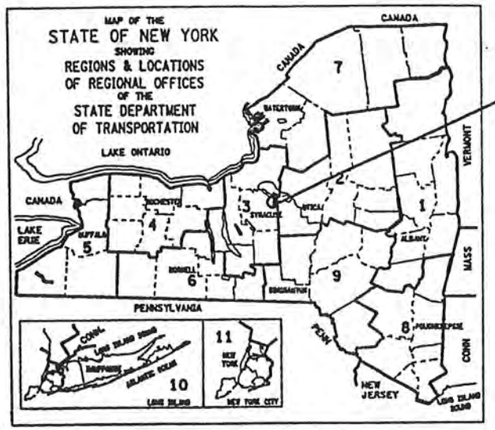

THIS IS A BRIDGE REHABILITATION PROJECT ON VARIOUS BRIDGES ON INTERSTATE 481, LOCATED IN THE TOWNS OF CICERO AND DEWITT IN ONONDAGA COUNTY. THIS WORK CONSISTS OF BRIDGE JOINTS, BEARINGS, BRIDGE RAIL AND CONCRETE REPAIR OF SUBSTRUCTURES. THERE ARE 28 BRIDGES IN THE PROJECT BEGINNING AT REFERENCE MARKER 481I-3301-1000 SOUTH OF THE CITY OF SYRACUSE AND ENDING AT REFERENCE MARKER 481I-3301-2143. I481 INTERCHANGE NORTH OF THE CITY.

STATE OF NEW YORK
DEPARTMENT OF TRANSPORTATION
OFFICE OF ENGINEERING

BRIDGE REHABILITATION PROJECT (ELEMENT SPECIFIC)
VARIOUS BRIDGES ON INTERSTATE 481
TOWNS OF DEWITT AND CICERO

VOLUME 1 OF 2

432 SHEETS ONONDAGA COUNTY CONTRACT D259214

F.A. PROJECT

STANDARD SHEETS

M203-4, M203-5, M203-6R1, M603-1
M606-32, M606-33, M606-34,
M619-3R1, M619-4, M619-5
M685-1, M685-2R1, M685-3R1
M685-4R1, M685-5R1, M403-1, M203-4,
M203-5, M203-6R1, M603-1

BTO 9/1/04
07/12/06
David J. Hann 7/30/08
7/13/10
6/8/12

ALL WORK CONTEMPLATED UNDER THIS CONTRACT IS TO BE COVERED BY AND IN CONFORMITY WITH THE STANDARD SPECIFICATIONS (METRIC UNITS) OF JANUARY 2, 2002, AS AMENDED BY ADDENDA NOS. 1 AND 2, EXCEPT AS MODIFIED ON THESE PLANS AND IN THE ITEMIZED PROPOSAL.

CONTRACTOR'S NAME _____
AWARD DATE _____
COMPLETION DATE _____
FINAL ACCEPTANCE DATE _____
REGIONAL DIRECTOR _____
ENGINEER IN CHARGE _____
FINAL COST TOTAL _____

FISCAL SHARE COST(S)

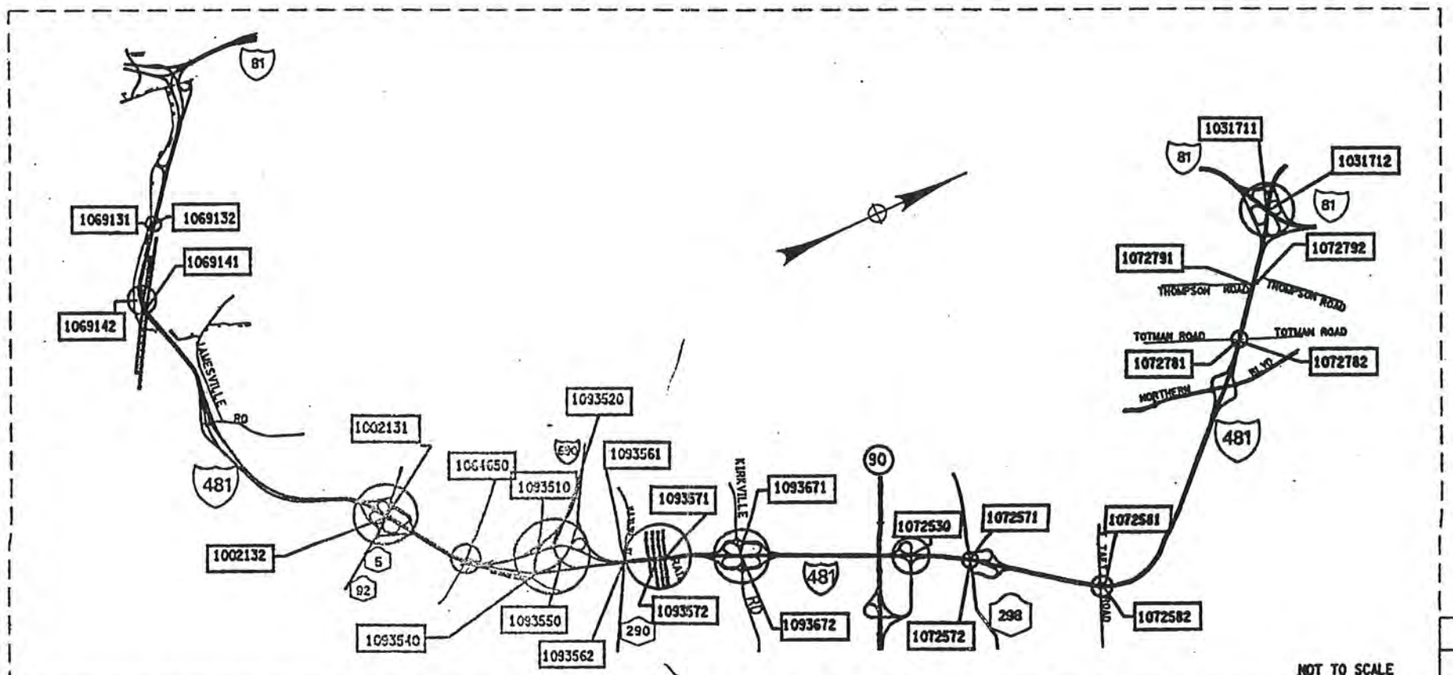

NOT TO SCALE

PROJECT LOCATION

BRIDGE REHAB. PROJ.- ELEMENT SPECIFIC			
VARIOUS BRIDGES ON INTERSTATE 481			
TOWNS OF DEWITT AND CICERO			
ONONDAGA COUNTY			
FED. ROAD REG. NO.	STATE	SHEET NO.	TOTAL SHEETS
1	N.Y.	1	432
FEDERAL AID PROJECT NO.			
CAPITAL PROJECT IDENTIFICATION NO. 3056.13			
INDEX ON SHEET NO. 5 & 6			

RECOMMENDED BY John E. Fietze 9/04/02
REGIONAL DESIGN ENGINEER DATE

RECOMMENDED BY Myron A. Dunlap 9/4/02
REGIONAL CONSTRUCTION ENGINEER DATE

RECOMMENDED BY 9/04/02
REGIONAL TRANSPORTATION MAINTENANCE ENGINEER DATE

RECOMMENDED BY 9-4-02
REGIONAL TRAFFIC ENGINEER DATE

APPROVED BY 09-04-02
REGIONAL DIRECTOR DATE

DESIGN SUPERVISOR Clarence E. Nick JOB MANAGER DeCicco DESIGNED BY CHECKED BY ESTIMATED BY DRAFTED BY CHECKED BY

FED ROAD REG. NO.	STATE	CONTRACT NO.	SHEET NO.	TOTAL SHEETS
1	N.Y.	D259214	5	432

BRIDGE REHABILITATION PROJECT (ELEMENT SPECIFIC)
VARIOUS BRIDGES ON INTERSTATE 481
TOWNS OF DEWITT AND CICERO
ONONDAGA COUNTY
P.I.N. 305613 B.I.N. ALL BINS

INDEX

SHEET NO.	DESCRIPTION	DRAWING NO.
1	TITLE SHEET	COVER
2,3,4	ESTIMATE OF QUANTITIES	
5,6	INDEX	IDX-1 - IDX-2
7-155	MAINTENANCE AND PROTECTION OF TRAFFIC	MPT-1 - MPT-149
156	CROSSOVER TYPICAL SECTION	CTS-1
157-160	CROSSOVER SURVEY CONTROL DATA	HC-1 - HC-4
161-166	CROSSOVER PLANS	CPL-1 - CPL-6
167-174	CROSSOVER PROFILES	CPR-1 - CPR-8
175-177	CROSSOVER MISC. DETAILS	CMD-1 - CMD-3
178-179	CROSSOVER MISC. TABLES	CMT-1 - CMT-2
180-191	ESTIMATE OF QUANTITIES BY STRUCTURE	QE-1A - QE-4C
192	GENERAL NOTES	GN-1
193	BIN 1002131, I481SB/RT. 5, PLAN AND ELEVATION	GP1-1
194	BIN 1002131, TYPICAL BRIDGE SECTION AND PROFILE	TS1-1
195-197	BIN 1002131, SOUTH ABUTMENT (SB)	AB1-1 - AB1-3
198-199	BIN 1002131, NORTH ABUTMENT (SB), SHEET PILING LAYOUT	AB1-4 - AB1-5
200-201	BIN 1002131 PIER 1 & PIER 2 SB REMOVAL DETAILS	PR1-1 & PR1-2
202	BIN 1002131, PEDESTAL REPLACEMENT	PR1-3
203	BIN 1002131, BOLSTER DETAILS	PR1-4
204	BIN 1002131, ANCHOR BOLT LAYOUT (SB)	PR1-5
205	BIN 1002132, I481NB/RT. 5, PLAN AND ELEVATION	GP2-1
206-207	BIN 1002132, TYPICAL BRIDGE SECTION AND PROFILE, APPROACH SECTION	TS2-1 & TS2-2
208-213	BIN 1002132, SOUTH ABUTMENT (NB)	AB2-1 - AB2-6
214-219	BIN 1002132, NORTH ABUTMENT (NB)	AB2-7 - AB2-12
220-221	BIN 1002132, PIERS (NB)	PR2-1 & PR2-2
222	BIN 1002132, PEDESTAL REPLACEMENT (NB)	PR2-3
223	BIN 1002132, BOLSTER DETAILS (NB)	PR2-4
224	BIN 1002132, ANCHOR BOLT LAYOUT (NB)	PR2-5
225	BIN 1031711 AND 1031712, I-481/I-81, PLAN AND ELEVATION	GP3-1
226	BIN 1031711 & 1031712, TYPICAL BRIDGE SECTION AND PROFILE	TS3-1
227	BIN 1031711, EAST ABUTMENT (SB) PLAN & ELEVATION	AB3-1
228	BIN 1031711, WEST ABUTMENT (SB) PLAN & ELEVATION	AB3-2
229	BIN 1031712, EAST ABUTMENT (NB) PLAN & ELEVATION	AB3-3
230	BIN 1031712, WEST ABUTMENT (NB) PLAN & ELEVATION	AB3-4
231	BIN 1031711 & 1031712, APPROACH SLABS	AS3-1
232	BIN 1064650, KINNE RD/I-481, PLAN, ELEVATION, AND BRIDGE SECTION	GP4-1
233	BIN 1069131 & 1069132, I-481/QUARRY DRIVEWAY, PLAN AND ELEVATION	GP5-1
234	BIN 1069131 & 1069132, TYPICAL BRIDGE SECTION AND PROFILE AND BRIDGE SECTION	TS5-1
235	BIN 1069131, WEST ABUTMENT (SB) PLAN & ELEVATION	AB5-1
236	BIN 1069131, EAST ABUTMENT (SB) PLAN & ELEVATION	AB5-2
237	BIN 1069132, EAST ABUTMENT (NB) PLAN & ELEVATION	AB5-3
238-239	BIN 1069141 & 1069142, I-481/NYS + W RAILROAD, GENERAL PLAN AND ELEVATION	GP6-1 - GP6-2
240-241	BIN 1069141 & 1069142, TYPICAL BRIDGE SECTION AND PROFILES	TS6-1 & TS6-2
242	BIN 1069141, WEST ABUTMENT (SB) PLAN & ELEVATION	AB6-1
243	BIN 1069141, EAST ABUTMENT (SB) PLAN & ELEVATION	AB6-2
244	BIN 1069142, WEST ABUTMENT (NB) PLAN & ELEVATION	AB6-3
245	BIN 1069142, EAST ABUTMENT (NB) PLAN & ELEVATION	AB6-4

INDEX (CONTINUED)

SHEET NO.	DESCRIPTION	DRAWING NO.
246	BIN 1072530, RAMP TO I-481/I-481, PLAN, ELEVATION AND BRIDGE SECTION	GP7-1
247-248	BIN 1072530, EAST ABUTMENT	AB7-1 - AB7-2
249	BIN 1072571 & BIN 1072572, I-481/ROUTE 298 PLAN AND ELEVATION AND BRIDGE SECTION	GP8-1
250	BIN 1072571 & BIN 1072572, TYPICAL BRIDGE SECTION AND PROFILE	TS8-1
251	BIN 1072571, SOUTH ABUTMENT (SB) PLAN & ELEVATION	AB8-1
252	BIN 1072571, NORTH ABUTMENT (SB) PLAN & ELEVATION	AB8-2
253	BIN 1072572, SOUTH ABUTMENT (NB) PLAN & ELEVATION	AB8-3
254	BIN 1072581 & BIN 1072582, I-481/TAFT ROAD, PLAN AND ELEVATION	GP9-1
255	BIN 1072581 & 1072582, TYPICAL BRIDGE SECTION AND PROFILE	TS9-1
256-257	BIN 1072581, SOUTH ABUTMENT AND NORTH ABUTMENT (SB)	AB9-1 & AB9-2
258-259	BIN 1072582, SOUTH ABUTMENT AND NORTH ABUTMENT (NB)	AB9-3 & AB9-4
260	BIN 1072781 & BIN 1072782, I-481/TOTMAN ROAD, PLAN, ELEVATION AND BRIDGE SECTION	GP10-1
261	BIN 1072781 & BIN 1072782 TYPICAL BRIDGE SECTION AND PROFILE	TS10-1
262-263	BIN 1072781, EAST ABUTMENT (SB) PLAN & ELEVATION	AB10-1 & AB10-2
264	BIN 1072782, WEST ABUTMENT (NB) PLAN & ELEVATION	AB10-3
265	BIN 1072781, APPROACH SLABS	AS10-1
266	BIN 1072791 & BIN 1072792, I-481/ THOMPSON ROAD, PLAN, ELEVATION AND BRIDGE SECTION	GP11-1
267	BIN 1072791 & BIN 1072792 TYPICAL BRIDGE SECTIONS AND PROFILE	TS11-1
268	BIN 1072791, EAST & WEST ABUTMENTS (SB)	AB11-1
269	BIN 1072791, APPROACH SLAB (SB)	AS11-1
270	BIN 1093510, I-690 RAMP/ I-481SB, PLAN, ELEVATION, AND BRIDGE SECTION	GP12-1
271	BIN 1093510, WEST ABUTMENT PLAN & ELEVATION	AB12-1
272	BIN 1093520, WN LINE OVER INTERSTATE 481 SB, PLAN, ELEVATION, AND BRIDGE SECTION	GP13-1
273	BIN 1093520, WEST ABUTMENT PLAN & ELEVATION	AB13-1
274	BIN 1093540, I-690 EB/ I-481 NB RAMP, PLAN, ELEVATION, AND BRIDGE SECTION	GP14-1
275	BIN 1093540 TYPICAL BRIDGE SECTION AND PROFILE	TS14-1
276	BIN 1093540, WEST ABUTMENT	AB14-1
277	BIN 1093550, I-481 NB/WB CONNECTOR, PLAN, ELEVATION, AND BRIDGE SECTION	GP15-1
278	BIN 1093550, SOUTH ABUTMENT, NB PLAN & ELEVATION	AB15-1
279	BIN 1093550, NORTH ABUTMENT, NB PLAN & ELEVATION	AB15-2
280	BIN 1093561 & 1093562, I-481/ROUTE 290, PLAN, ELEVATION AND BRIDGE SECTION	GP16-1
281	BIN 1093561 & 1093562 TYPICAL BRIDGE SECTION AND PROFILE	TS16-1
282	BIN 1093561, SOUTH ABUTMENT (SB) PLAN & ELEVATION	AB16-1
283	BIN 1093562, SOUTH ABUTMENT (NB) PLAN & ELEVATION	AB16-2
284-287	BIN 1093571 & BIN 1093572, I-481/CSX RAILROAD YARD, PLAN & ELEVATION	GP17-1 - GP17-4
288	BIN 1093571 AND BIN 1093572, TYPICAL BRIDGE SECTION AND PROFILES	TS17-1
289-293	BIN 1093571 AND BIN 1093672, DRAINAGE DETAILS	DD17-1 - DD17-5
294-296	BIN 1093571 AND BIN 1093672, SCUPPER EXTENSIONS	DD17-6 - DD17-8
297-314	BIN 1093571, PIERS 1-14, (SB)	PR17-1S - PR17-18S
315	BIN 1093572, SOUTH ABUTMENT (NB)	AB17-1
316-329	BIN 1093572, PIERS 1-14 (NB)	PR17-1N - PR17-14N
330-331	BIN 1093571 AND 1093572, PARAPET REPAIR DETAILS	PW17-1 & PW17-2
332	BIN 1093572, BRIDGE DECK REPAIRS	DR17-1

ALL DIMENSIONS ARE IN m UNLESS OTHERWISE NOTED

AS BUILT REVISIONS

SIGNATURE DATE

INTERSTATE 481
REHABILITATION PROJECT

INDEX

STATE OF NEW YORK
DEPARTMENT OF TRANSPORTATION

FILENAME	REGION	DATE	DRAWING NO.
305613AAL2A	3	10/02	IDX-1

CHECKED BY
DRAFTED BY
ESTIMATED BY
CHECKED BY
DESIGNED BY

FED ROAD REG. NO.	STATE	CONTRACT NO.	SHEET NO.	TOTAL SHEETS
1	N.Y.	D259214	6	432

BRIDGE REHABILITATION PROJECT (ELEMENT SPECIFIC)
VARIOUS BRIDGE ON INTERSTATE 481
TOWN OF DEWITT AND CICERO
ONONDAGA COUNTY
P.I.N. 305613 B.I.N. VARIOUS

INDEX (CONTINUED)

SHEET NO.	DESCRIPTION	DRAWING NO.
333	BIN 1093671 & 1093672, I-481/KIRKVILLE ROAD, PLAN, ELEVATION AND BRIDGE SECTION	GP18-1
334	BIN 1093671 & BIN 1093672 TYPICAL BRIDGE SECTION AND PROFILE	TS18-1
335-336	BIN 1093671, SOUTH ABUTMENT (SB) PLAN, ELEVATION AND SECTIONS	AB18-1 - AB18-2
337	BIN 1093671, NORTH ABUTMENT (SB) PLAN & ELEVATION	AB18-3
338-339	BIN 1093672, SOUTH ABUTMENT (NB) PLAN, ELEVATION AND SECTIONS	AB18-4 - AB18-5
340	BIN 1093672, NORTH ABUTMENT (NB) PLAN & ELEVATION	AB18-6
341-342	BIN 1002131, BIN 1002132 & BIN 1093571, MULTIROTATIONAL BEARINGS	BR-1 & BR-2
343	BIN 1002131, BEARING RESTORATION DETAILS	BR-3
344	BINS 1069131 & 1069132, BEARING RESTORATION DETAILS	BR-4
345-346	BIN 1069141 & BIN 1069142, BEARING RESTORATION DETAIL	BR-5 & BR-6
347	BIN 1072530, BEARING RESTORATION DETAILS	BR-7
348	BIN 1072791 AND BIN 1072792 BEARING RESTORATION DETAILS	BR-8
349	BIN 1093550, BEARING RESTORATION DETAILS	BR-9
350-351	BINS 1093751 & 1093572, BEARING RESTORATION DETAILS	BR-10 & BR-11
352	BIN 1072781 BEARING RESTORATION DETAILS	BR-12
	RAILING DETAILS	
353-355	BIN 1002131 & BIN 1002132, RAILING DETAILS	RD-1 - RD-3
356-358	BIN 1069141 & BIN 1069142, RAILING DETAILS	RD-4 - RD-6
359-360	RAILING DETAILS	RD-7 - RD-8
	BRIDGE JOINTS	
361-364	BRIDGE JOINT TABLE	JT-1 - JT-4
365	COMPRESSION SEAL JOINT DETAIL (ALL BRIDGES)	JD-1
366-370	BIN 1002131, JOINT DETAILS	JD-2 - JD-6
371-375	BIN 1002132, JOINT DETAILS	JD-7 - JD-11
376-377	BIN 1031711 & BIN 1031712, JOINT DETAILS	JD-12 - JD-13
378-383	BIN 1064650, JOINT DETAILS	JD-14 - JD-19
384-385	BIN 1069131, JOINT DETAILS	JD-20 + JD-21
386-387	BIN 1069132, JOINT DETAILS	JD-22 + JD-23
388-392	BIN 1069141 & BIN 1069142	JD-24 - JD-28
393-394	BIN 1072530, JOINT DETAILS	JD-29 + JD-30
395-396	BIN 1072571, JOINT DETAILS	JD-31 + JD-32
397-398	BIN 1072572, JOINT DETAILS	JD-33 + JD-34
399-400	BIN 1072581, JOINT DETAILS	JD-35 + JD-36
401-402	BIN 1072582, JOINT DETAILS	JD-37 + JD-38
403-404	BIN 1072781, JOINT DETAILS	JD-39 + JD-40
405-406	BIN 1072782, JOINT DETAILS	JD-41 + JD-42
407-408	BIN 1072792, JOINT DETAILS	JD-43 + JD-44
409-410	BIN 1093510, JOINT DETAILS	JD-45 + JD-46
411	BIN 1072791, BIN 1093520 & BIN 1093540, JOINT DETAILS	JD-47
412-413	BIN 1093550, JOINT DETAILS	JD-48 + JD-49
414-416	BIN 1093561 & BIN 1093562, JOINT DETAILS	JD-50 - JD-52
417-420	BIN 1093571 & BIN 1093572, JOINT DETAILS	JD-53 - JD-56
421-423	BIN 1093671 & BIN 1093672, JOINT DETAILS	JF-57 - JD-59

INDEX (CONTINUED)

SHEET NO.	DESCRIPTION	DRAWING NO.
424	VARIOUS BRIDGES - ROAD PLATE DETAIL	AA - RP1
	BAR LIST	
425-428	ALL BINS (BRIDGE JOINT SYSTEMS)	BL-1 - BL-4
429	BIN 1002131 & 1002132	BL-5
430	BIN 1093571	BL-6
431	STRUCTURAL SLAB OVERLAY & ASPHALT PAVEMENT REPAIR DETAILS	MS-1
432	MISC. TABLE	MT-1

ALL DIMENSIONS ARE IN m UNLESS OTHERWISE NOTED

AS BUILT REVISIONS

SIGNATURE DATE

INTERSTATE 481
REHABILITATION PROJECT

INDEX

STATE OF NEW YORK
DEPARTMENT OF TRANSPORTATION

FILENAME	REGION	DATE	DRAWING NO.
305613AAJL2A	3	10/02	IDX-2

CHECKED BY
DRAFTED BY
ESTIMATED BY
CHECKED BY
DESIGNED BY

FED ROAD REG. NO.	STATE	CONTRACT NO.	SHEET NO.	TOTAL SHEETS
1	N.Y.	D259214	186	432

BRIDGE REHABILITATION PROJECT (ELEMENT SPECIFIC)
VARIOUS BRIDGES ON INTERSTATE 481
TOWNS OF DEWITT AND CICERO
ONONDAGA COUNTY
P.I.N. 305613 B.I.N. VARIOUS

ESTIMATE OF QUANTITIES BY STRUCTURE

ITEM #	DESCRIPTION	UNIT	1072781		1072782		1072791		1072792		1093510		1093520		1093540	
			EST.	FINAL	EST.	FINAL	EST.	FINAL	EST.	FINAL	EST.	FINAL	EST.	FINAL	EST.	FINAL
203.02 M	UNCLASSIFIED EXCAVATION & DISPOSAL	CM	2		—		2		—		—		—		—	
203.03 M	EMBANKMENT IN PLACE	CM	—		—		—		—		—		—		—	
203.07 M	SELECT GRANULAR FILL	CM	—		—		—		—		—		—		—	
203.1770 M	CLEAN EXISTING PIPE CULVERT	M	—		—		—		—		—		—		—	
203.18 M	CLEANING CLOSED DRAINAGE SYSTEMS	M	—		—		—		—		—		—		—	
203.19 M	CLEAN DRAINAGE STRUCTURES AND MANHOLES	EA	—		—		—		—		—		—		—	
203.21 M	SELECT STRUCTURE FILL	CM	—		—		—		—		—		—		—	
15203.51 M	GRADING, CLEANING AND RESHAPING EXISTING DITCHES	M	—		—		—		—		—		—		—	
206.01 M	STRUCTURE EXCAVATION	CM	—		—		—		—		—		—		—	
206.02 M	TRENCH AND CULVERT EXCAVATION	CM	—		—		—		—		—		—		—	
207.10 M	GEOTEXTILE BEDDING	SM	—		—		—		—		—		—		—	
210.5433 M	REMOVAL AND DISPOSAL OF ASBESTOS CONTAINING CAULKING (BV 12)	LS	—		—		—		—		—		—		—	
210.9913 M	REMOVAL AND DISPOSAL OF MISC. ASBESTOS CONTAINING MATERIAL BV-12	LS	—		—		—		—		—		NEC		—	
304.15 M	SUBBASE COURSE, OPTIONAL TYPE	CM	—		—		—		—		—		—		—	
402.128201 M	12.5mm F2 SUPERPAVE HMA, 80 SERIES COMPACTION	MT	3		—		3		—		3		—		—	
402.128211 M	PLANT PRODUCTION QUALITY ADJUSTMENT TO ITEM 402.128201M	QU	1		—		1		—		1		—		—	
402.258901 M	25mm F9 SUPERPAVE HMA, 80 SERIES COMPACTION	MT	—		—		—		—		4		—		—	
402.258911 M	PLANT PRODUCTION QUALITY ADJUSTMENT TO 402.258901M	QU	—		—		—		—		1		—		—	
402.378901 M	37.5mm, F9 SUPERPAVE HMA, 80 SERIES COMPACTION	MT	—		—		—		—		—		—		—	
402.378911 M	PLANT PRODUCTION QUALITY ADJUSTMENT TO 402.378901M	QU	—		—		—		—		—		—		—	
407.01 M	TACK COAT	L	5		—		5		—		9		—		—	
490.30 M	MISC. COLD MILLING OF BITUMINUS CONCRETE	SM	—		—		—		—		25		—		—	
502.92 M	SEALING TRANSVERSE JOINTS	M	—		—		—		—		—		21		21	
08520.5014 M	SAWCUT, ASPH, CONC/ASPH, OVERLAY- PCC PAVE	M	74		—		48		—		17		—		—	
552.13 M	TEMPORARY STEEL SHEETING	SM	—		—		—		—		—		—		—	
555.0105 M	CONCRETE FOR STRUCTURES - CLASS A	CM	1		—		—		—		—		—		—	
555.09 M	CONCRETE FOR STRUCTURES, CLASS HP	CM	3		1		—		1		1		—		—	
18555.81 M	STRUCTURAL CRACK SEALING	LM	6		—		—		—		—		—		—	
556.0201 M	UNCOATED BAR REINFORCEMENT FOR CONCRETE STRUCTURES	KG	—		—		—		—		—		—		—	
556.0202 M	EPOXY COATED REBAR FOR STRUCTURES	KG	70		72		—		71		52		—		—	
558.01 M	TRANSVERSE SAWCUT GROOVING OF STR SLAB SURF	SM	18		—		17		—		—		—		—	
18559.1696 M	PROTECTIVE SEALER STRUCTURAL CONCRETE	SM	—		—		—		—		—		—		—	
18559.1896 M	PROT SEAL STR. CONC. - NEW BRIDGE DECK OVERLAYS	SM	—		—		—		—		—		—		—	
564.0501 M	STRUCTURAL STEEL	LS	—		—		—		—		—		—		—	
565.1522 M	TYPE M.R. EXPANSION BEARING (1001 TO 2000 KN)	EA	—		—		—		—		—		—		—	
565.1722 M	TYPE M.R. FIXED BEARING (1001 TO 2000 KN)	EA	—		—		—		—		—		—		—	
15565.4302 M	BRIDGE BEARING RESTORATION	EA	10		—		10		10		—		—		—	
566.01 M	MODULAR EXPANSION JOINT SYSTEM, ONE-CELL	M	—		—		—		—		—		—		—	
566.02 M	MODULAR EXPANSION JOINT SYSTEM TWO-CELL	M	—		—		—		—		—		—		—	
567.31 M	ARM JNT SYS WI COMPRESSION SEAL - TY A1	M	13		13		—		14		—		—		—	
567.32 M	ARM JNT SYS WI COMPRESSION SEAL - TY A2	M	—		—		—		—		—		—		—	
567.35 M	ARM JNT SYS WI COMPRESSION SEAL - TY A5	M	13		13		—		14		—		—		—	
567.36 M	ARM JNT SYS WI COMPRESSION SEAL - TY A6	M	—		—		—		—		—		—		—	
18567.46 M	ELASTOMERIC CONCRETE FOR BRIDGE JOINT SYSTEMS	M	—		26		—		26		—		—		—	
16567.640001 M	REPLACE COMPRESSION SEAL IN EXISTING BRIDGE JOINTS	M	—		—		28		—		18		10		10	
568.32 M	CEMENT MORTAR PADS	EA	—		—		—		—		—		—		—	
568.50 M	STEEL BRIDGE RAILING (2 RAIL)	M	—		—		—		—		—		—		—	
570.090001 M	ENVIRONMENTAL GROUND PROTECTION	LS	—		—		—		—		—		—		—	
570.090002 M	ENVIRONMENTAL GROUND PROTECTION	LS	—		—		—		—		—		—		—	
570.090003 M	ENVIRONMENTAL GROUND PROTECTION	LS	—		—		—		—		—		—		—	

ALL DIMENSIONS ARE IN m UNLESS OTHERWISE NOTED

AS BUILT REVISIONS

SIGNATURE DATE

SHEET 7 OF 12

ESTIMATE OF QUANTITIES

STATE OF NEW YORK
DEPARTMENT OF TRANSPORTATION

FILENAME	REGION	DATE	DRAWING NO.
305613J1A	3	10/02	QE-3A

ESTIMATED BY ____ CHECKED BY ____ DRAFTED BY ____ CHECKED BY ____ DESIGNED BY ____ JOB MANAGER ____ DESIGN SUPERVISOR ____

FED ROAD REG. NO.	STATE	CONTRACT NO.	SHEET NO.	TOTAL SHEETS
1	N.Y.	D259214	187	432

BRIDGE REHABILITATION PROJECT (ELEMENT SPECIFIC)
VARIOUS BRIDGES ON INTERSTATE 481
TOWNS OF DEWITT AND CICERO
ONONDAGA COUNTY
P.I.N. 305613 B.I.N. VARIOUS

ESTIMATE OF QUANTITIES BY STRUCTURE

ITEM #	DESCRIPTION	UNIT	1072781		1072782		1072791		1072792		1093510		1093520		1093540	
			EST.	FINAL	EST.	FINAL	EST.	FINAL	EST.	FINAL	EST.	FINAL	EST.	FINAL	EST.	FINAL
570.090004 M	ENVIRONMENTAL GROUND PROTECTION	LS	—		—		—		—		—		—		—	
570.100001 M	ENVIRONMENTAL WATERWAY PROTECTION	LS	—		—		—		—		—		—		—	
570.100002 M	ENVIRONMENTAL WATERWAY PROTECTION	LS	—		—		—		—		—		—		—	
16570.32 M	LOCALIZED PAINTING OF BARE STRUCTURAL STEEL	SM	—		—		—		—		—		—		—	
16570.72 M	LOCALIZED VACUUM CONTAINED CLEANING OF STRUCTURAL STEEL PLANAR SURFACES	SM	—		—		—		—		—		—		—	
16570.76 M	LOCALIZED VACUUM CONTAINED CLEANING OF STRUCTURAL STEEL - IRREGUALR	SM	—		—		—		—		—		—		—	
571.010001 M	TREATMENT AND DISPOSAL OF PAINT REMOVAL WASTE	CM	—		—		—		—		—		—		—	
571.010002 M	TREATMENT AND DISPOSAL OF PAINT REMOVAL WASTE	CM	—		—		—		—		—		—		—	
571.010003 M	TREATMENT AND DISPOSAL OF PAINT REMOVAL WASTE	CM	—		—		—		—		—		—		—	
571.010004 M	TREATMENT AND DISPOSAL OF PAINT REMOVAL WASTE	CM	—		—		—		—		—		—		—	
572.010001 M	STRUCTURAL STEEL PAINT SYSTEM: SHOP APPLIED	SM	—		—		—		—		—		—		—	
572.010002 M	STRUCTURAL STEEL PAINT SYSTEM: SHOP APPLIED	SM	—		—		—		—		—		—		—	
576.2001M	DOWNSPOUT SYSTEM, DUCTILE IRON	M	—		—		—		—		—		—		—	
578.020001 M	OVERLAY CONCRETE - CLASS E	SM	—		—		—		—		—		—		—	
578.020002 M	OVERLAY CONCRETE - CLASS E	SM	—		—		—		—		—		—		—	
578.020003 M	OVERLAY CONCRETE - CLASS E	SM	—		—		—		—		—		—		—	
578.020004 M	OVERLAY CONCRETE - CLASS E	SM	—		—		—		—		—		—		—	
578.020005 M	OVERLAY CONCRETE - CLASS E	SM	—		—		—		—		—		—		—	
578.030001 M	SLAB RECONSTRUCTION CONCRETE - CLASS D OR E	SM	—		—		—		—		—		—		—	
578.030002 M	SLAB RECONSTRUCTION CONCRETE - CLASS D OR E	SM	—		—		—		—		—		—		—	
578.030003 M	SLAB RECONSTRUCTION CONCRETE - CLASS D OR E	SM	—		—		—		—		—		—		—	
578.030004 M	SLAB RECONSTRUCTION CONCRETE - CLASS D OR E	SM	—		—		—		—		—		—		—	
578.030005 M	SLAB RECONSTRUCTION CONCRETE - CLASS D OR E	SM	—		—		—		—		—		—		—	
578.030006 M	SLAB RECONSTRUCTION CONCRETE - CLASS D OR E	SM	18		—		—		—		—		—		—	
578.030007 M	SLAB RECONSTRUCTION CONCRETE - CLASS D OR E	SM	—		—		17		—		—		—		—	
579.02 M	REINFORCING BAR EXPOSURE	SM	26		8		17		8		—		—		—	
580.01 M	REMOVAL OF STRUCTURAL CONCRETE	CM	3		3		—		3		1		—		—	
582.05 M	REMOVE STRUCTURAL CONCRETE WITH CLASS A CONCRETE	CM	1		1		1		—		1		1		2	
582.07 M	REMOVE STRUCTURAL CONCRETE AND REPLACE WITH VERTICAL OVERHEAD PATCH MATERIAL	SM	—		—		—		—		—		—		—	
16584.13 M	RAPID SETTING CONCRETE FOR BRIDGE AND APPROACH SLAB REPAIRS	KG	—		—		—		—		—		—		—	
585.01 M	STRUCTURAL LIFTING OPERATIONS - TYPE A	EA	10		—		10		10		—		—		—	
585.02 M	STRUCTURAL LIFTING OPERATIONS - TYPE B	EA	—		—		—		—		—		—		—	
585.03 M	STRUCTURAL LIFTING OPERATIONS TYPE C	EA	—		—		—		—		—		—		—	
586.01 M	DRILL AND GROUT BOLTS, OR REINFORCING BARS	mm	6000		6000		—		6600		4200		—		—	
17586.18M	DRILLING HOLES IN EXISITING SUBSTRUCTURE	M	—		—		—		—		—		—		—	
16586.200125 M	DRILL AND GROUT ANCHOR BOLTS AND REBAR IN CONCRETE	EA	—		—		—		—		—		—		—	
16586.200216 M	DRILL AND GROUT ANCHOR BOLTS AND REBAR IN CONCRETE	EA	—		—		—		—		—		—		—	
587.01 M	BRIDGE RAILING REMOVAL AND DISPOSAL	M	—		—		—		—		—		—		—	
589.520001 M	REMOVAL OF EXISTING STEEL	EA	—		—		—		—		—		—		—	
589.520002 M	REMOVAL OF EXISTING STEEL	EA	—		—		—		—		—		—		—	
589.520003 M	REMOVAL OF EXISTING STEEL	EA	—		—		—		—		—		—		—	
589.520004 M	REMOVAL OF EXISTING STEEL	EA	—		—		—		—		—		—		—	
589.520005 M	REMOVAL OF EXISTING STEEL	EA	—		—		—		—		—		—		—	
590.01M	VERTICAL ADJUSTMENT OF BRIDGE DRAINAGE DEVICES	EA	—		—		—		—		—		—		—	
603.6001 M	REINFORCED CONCRETE PIPE CLASS III, 300 mm	M	—		—		—		—		—		—		—	
603.7301M	REINFORCED CONCRETE PIPE END SECTION 300 mm DIAMETER	EA	—		—		—		—		—		—		—	

ESTIMATED BY ____ CHECKED BY ____
DRAFTED BY ____ CHECKED BY ____
DESIGNED BY ____
JOB MANAGER ____
DESIGN SUPERVISOR ____

ALL DIMENSIONS ARE IN m UNLESS OTHERWISE NOTED

AS BUILT REVISIONS

SIGNATURE DATE

SHEET 8 OF 12

ESTIMATE OF QUANTITIES

STATE OF NEW YORK
DEPARTMENT OF TRANSPORTATION

FILENAME	REGION	DATE	DRAWING NO.
305613J.1A	3	10/02	QE-3B

FED ROAD REG. NO.	STATE	CONTRACT NO.	SHEET NO.	TOTAL SHEETS
1	N.Y.	D259214	188	432

BRIDGE REHABILITATION PROJECT (ELEMENT SPECIFIC)
VARIOUS BRIDGES ON INTERSTATE 481
TOWNS OF DEWITT AND CICERO
ONONDAGA COUNTY
P.I.N. 305613 B.I.N. VARIOUS

ESTIMATE OF QUANTITIES BY STRUCTURE

ITEM #	DESCRIPTION	UNIT	1072781		1072782		1072791		1072792		1093510		1093520		1093540	
			EST.	FINAL	EST.	FINAL	EST.	FINAL	EST.	FINAL	EST.	FINAL	EST.	FINAL	EST.	FINAL
605.0901 M	UNDERDRAIN FILTER TYPE 1	CM	—		—		—		—		—		—		—	
605.1702 M	OPT. UNDERDRAIN PIPE 150 mm ø	M	—		—		—		—		—		—		—	
606.8701 M	CORRUGATED BEAM GUIDE RAILING TRANSITION ASSEMBLY, TWO RAIL, STEEL BRIDGE RAILING	EA	—		—		—		—		—		—		—	
16606.80 M	TRANSITION BRIDGE RAILING TO BOX BEAM GUIDE RAIL	M	—		—		—		—		—		—		—	
609.15 M	RESETTING EXISTING CURB	M	—		—		—		—		—		—		—	
610.0203 M	ESTABLISH TURF	SM	—		—		—		—		—		—		—	
612.0205 M	CLASS II TYPE B EROSION CONTROL MATERIAL	SM	—		—		—		—		—		—		—	
08615.0402 M	TREE AND VEGETATION BARRIER	M	—		—		—		—		—		—		—	
620.03 M	STONE FILLING (LIGHT)	CM	—		—		—		—		—		—		—	
625.01 M	SURVEY AND STAKEOUT	LS	—		—		—		—		—		—		—	
637.03 M	CONCRETE CYLINDER CURING BOX	EA	—		—		—		—		—		—		—	
637.0702 M	ENGINEER'S OFFICE TYPE C	MNTH	—		—		—		—		—		—		—	
10637.2101 M	FURN PORTABLE CELLULAR TELEPHONE EQUIP.	LS	—		—		—		—		—		—		—	
08637.3501 M	MICRO COMPUTER SYSTEM	EA	—		—		—		—		—		—		—	
15637.61 M	CPM SCHEDULE	LS	—		—		—		—		—		—		—	
15637.51 M	DIGITAL CAMERA SYSTEM	LS	—		—		—		—		—		—		—	
15637.91 M	CHAMPS MANAGEMENT SYSTEM	LS	—		—		—		—		—		—		—	
15637.98 M	PARTNERING WORKSHOP	LS	—		—		—		—		—		—		—	
640.10 M	WHITE PAINT REFLEC PAVEMENT STRIPES-0.38 mm	M	—		—		—		—		4		—		—	
640.11 M	YELLOW PAINT REFLEC PAVEMENT STRIPES-0.38 mm	M	—		—		—		—		3		—		—	
14646.10 M	MILLED IN AUDIBLE ROWAY DELINS (WIDE)	M	—		—		—		—		—		—		—	
23675.15M	FURNISH AND PLACE STONE BALLAST SURFACING COURSE	MT	—		—		—		—		—		—		—	
91685.0705 M	WHT POLYESTER REFLEC PAVEMENT STRIPE	M	—		—		—		—		4		—		—	
91685.0706 M	YEL POLYESTER REFLEC PAVEMENT STRIPE	M	—		—		—		—		3		—		—	
697.02 M	FIELD CHANGE ORDER	LS	—		—		—		—		—		—		—	
699.040001 M	MOBILIZATION	LS	NEC		NEC		NEC		NEC		NEC		NEC		NEC	

ALL DIMENSIONS ARE IN m UNLESS OTHERWISE NOTED

AS BUILT REVISIONS

SIGNATURE DATE

SHEET 9 OF 12

ESTIMATE OF QUANTITIES

STATE OF NEW YORK
DEPARTMENT OF TRANSPORTATION

FILENAME	REGION	DATE	DRAWING NO.
305613.L1A	3	10/02	QE-3C

DESIGN SUPERVISOR ____ JOB MANAGER ____ DESIGNED BY ____ CHECKED BY ____ ESTIMATED BY ____ DRAFTED BY ____ CHECKED BY ____

FED ROAD REG. NO.	STATE	CONTRACT NO.	SHEET NO.	TOTAL SHEETS
1	N.Y.	D259214	266	432

BRIDGE REHABILITION PROJECT (ELEMENT SPECIFIC)

VARIOUS BRIDGES ON INTERSTATE 481

TOWN OF DEWITT AND CICERO

ONONDAGA COUNTY

P.I.N. 305613 | B.I.N. 1072791 & 1072792

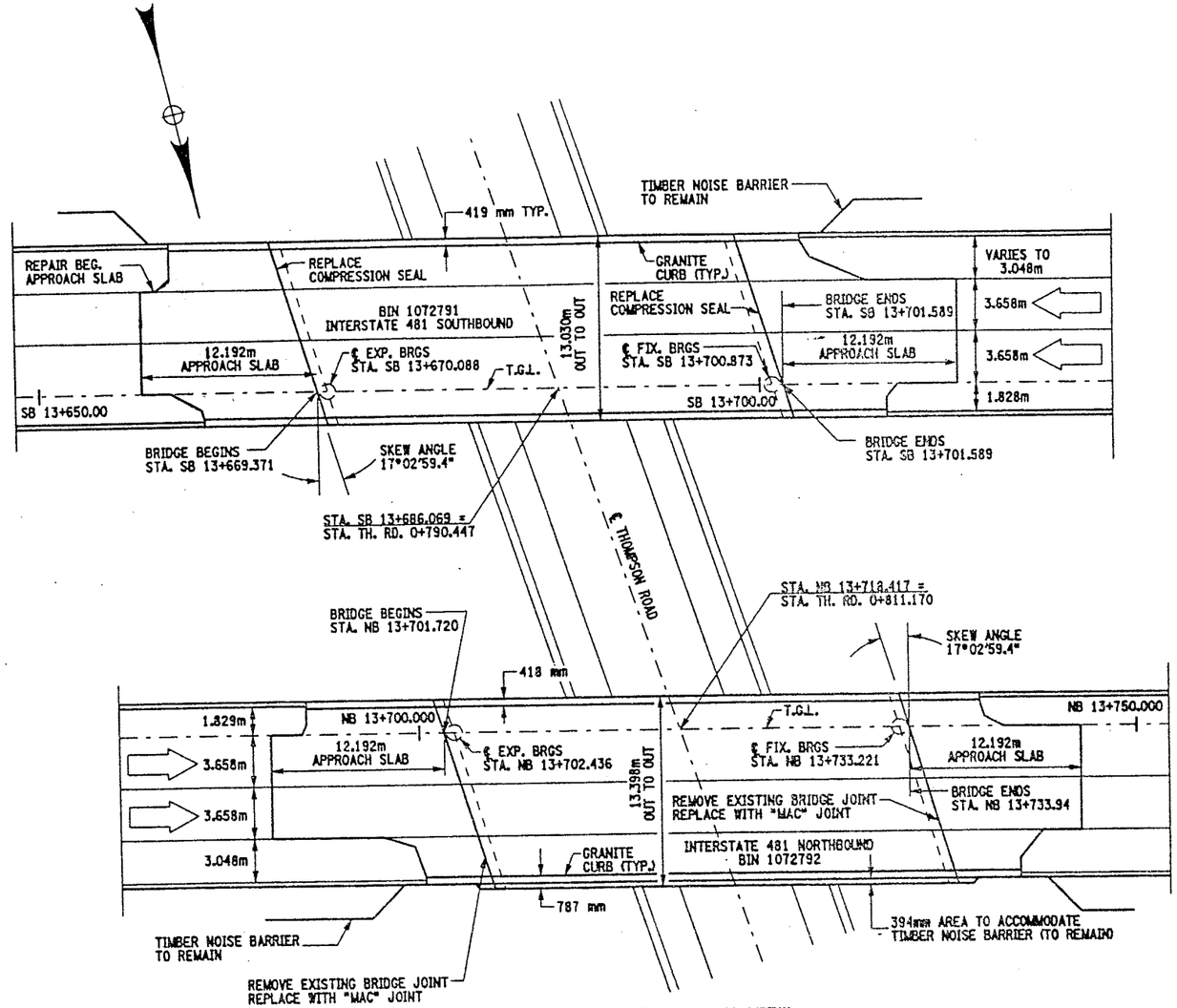

EXISTING PLAN VIEW

SCALE: 1:200

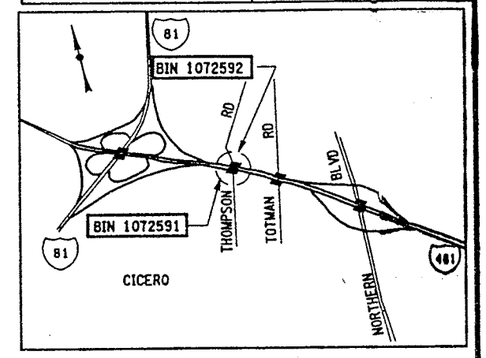

LOCATION MAP

NOT TO SCALE

WORK TO BE DONE (NOT NECESSARILY IN THIS ORDER)

BIN 1072791:

1. ESTABLISH MP&T SCHEME FOR STAGE CONSTRUCTION.
2. REPLACE COMPRESSION SEALS AT THE BRIDGE JOINTS.
3. REPAIR CONCRETE BEGINNING APPROACH SLAB. (SEE DWG. MS-2)
4. PERFORM BEARING RESTORATION OPERATIONS.
5. PERFORM MISCELLANEOUS REPAIRS TO CONCRETE ELEMENTS, BOTH ABUTMENTS.

BIN 1072792:

1. ESTABLISH MP&T SCHEME FOR STAGE CONSTRUCTION.
2. REMOVE EXISTING BRIDGE JOINTS.
3. PLACE NEW BRIDGE JOINTS, ("MAC" JOINTS).
4. PERFORM BEARING RESTORATION OPERATIONS.

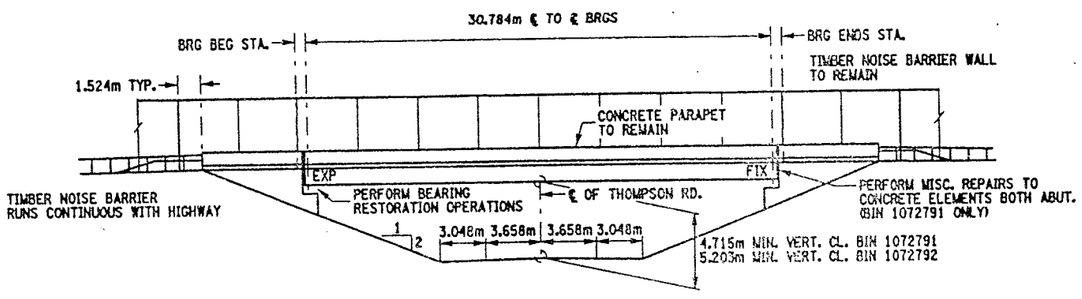

EXISTING ELEVATION VIEW

SCALE: 1:200

NOTE:

"MAC" JOINT - MODIFIED ARMORED JOINT SYSTEM WITH COMPRESSION SEAL.

BIN 1072791 SOUTHBOUND
BIN 1072792 NORTHBOUND

ALL DIMENSIONS ARE IN m UNLESS OTHERWISE NOTED

AS BUILT REVISIONS

SIGNATURE | DATE

INTERSTATE 481
OVER
THOMPSON ROAD

PLAN, ELEVATION AND BRIDGE SECTION

STATE OF NEW YORK
DEPARTMENT OF TRANSPORTATION

FILENAME	REGION	DATE	DRAWING NO.
305613AC.G1A	3	10/02	GP11-1

DESIGN SUPERVISOR ___ JOB MANAGER ___ DESIGNED BY ___ CHECKED BY ___ ESTIMATED BY ___ DRAFTED BY ___ CHECKED BY ___

FED ROAD REG. NO.	STATE	CONTRACT NO.	SHEET NO.	TOTAL SHEETS
1	N.Y.	D259214	267	432

BRIDGE REHABILITION PROJECT (ELEMENT SPECIFIC)
VARIOUS BRIDGES ON INTERSTATE 481
TOWN OF DEWITT AND CICERO
ONONDAGA COUNTY
P.I.N. 305613 B.I.N. 1072791 & 1072792

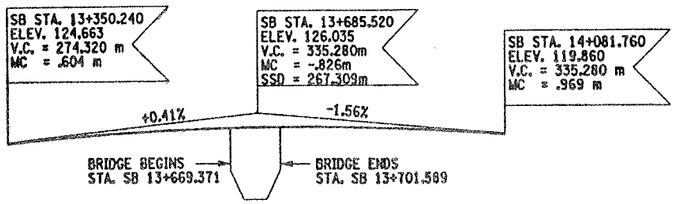

PROFILE
BIN 1072791 SB
NOT TO SCALE

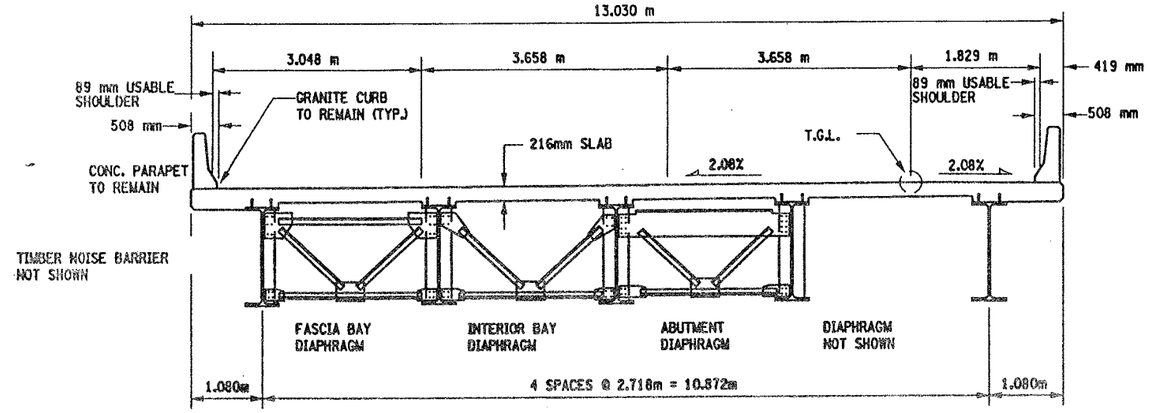

SECTION
NOT TO SCALE
BIN 1072791 SB

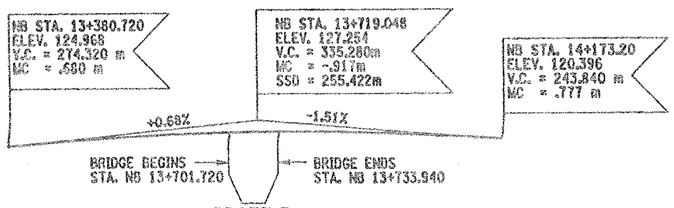

PROFILE
BIN 1072792 NB
NOT TO SCALE

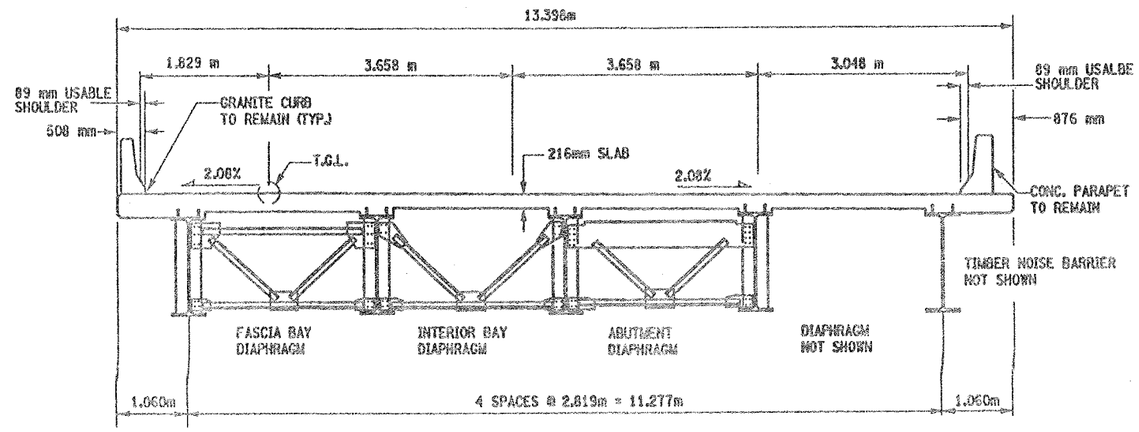

SECTION
NOT TO SCALE
BIN 1072792 NB

NOTES:

TIMBER NOISE BARRIER WALL IS ATTACHED TO NORTH FASCIA ON BIN 1072792 NB AND TO THE SOUTH FASCIA ON BIN 1072791 SB.

ALL DIMENSIONS ARE IN m UNLESS OTHERWISE NOTED

AS BUILT REVISIONS

SIGNATURE DATE

INTERSTATE 481
OVER
THOMPSON ROAD

TYPICAL BRIDGE SECTION AND PROFILE

STATE OF NEW YORK
DEPARTMENT OF TRANSPORTATION

FILENAME	REGION	DATE	DRAWING NO.
305613AC.G1A	3	10/02	TS11-1

DESIGN SUPERVISOR ____ JOB MANAGER ____ DESIGNED BY ____ CHECKED BY ____ ESTIMATED BY ____ DRAFTED BY ____ CHECKED BY ____

FED ROAD REG. NO.	STATE	CONTRACT NO.	SHEET NO.	TOTAL SHEETS
1	N.Y.	D259214	268	432

BRIDGE REHABILITATION PROJECT (ELEMENT SPECIFIC)
VARIOUS BRIDGES ON INTERSTATE 481
TOWNS OF DEWITT AND CICERO
ONONDAGA COUNTY
P.I.N. 305613 B.I.N. 1072791

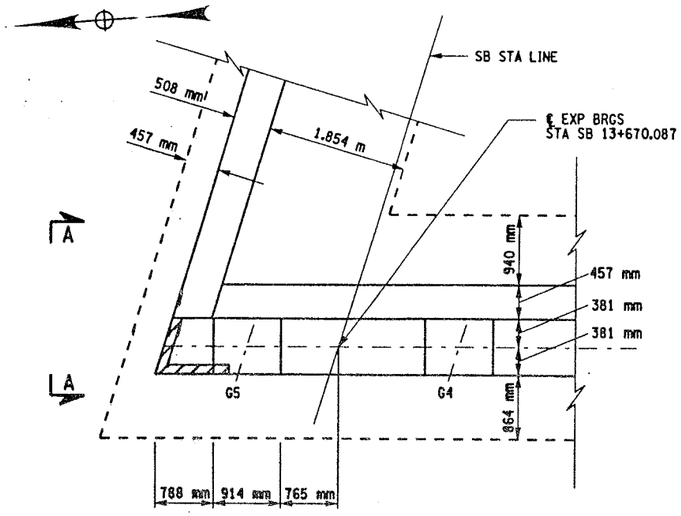

EAST ABUTMENT
PARTIAL PLAN
SCALE 1:40

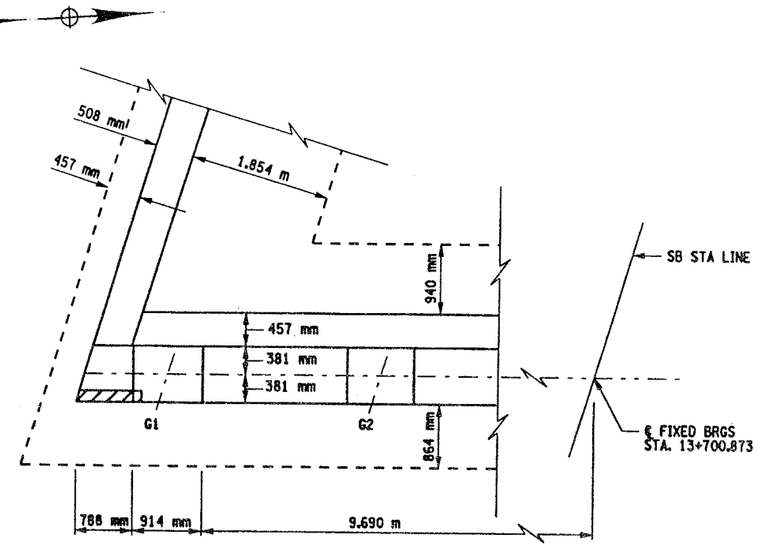

WEST ABUTMENT
PARTIAL PLAN
SCALE 1:40

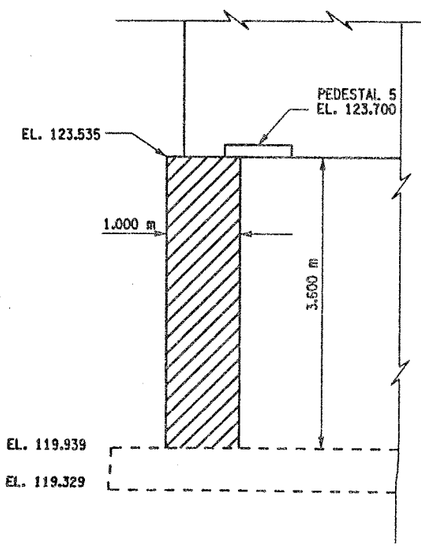

EAST ABUTMENT ELEVATION
SCALE 1:40

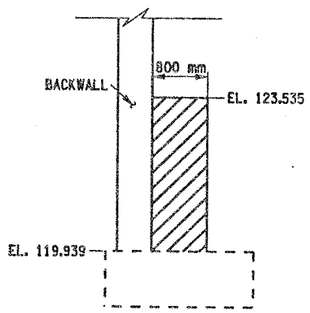

SECTION A-A
NOT TO SCALE

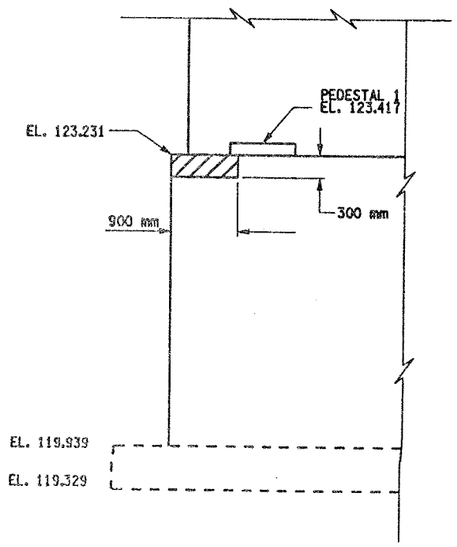

WEST ABUTMENT ELEVATION
SCALE 1:40

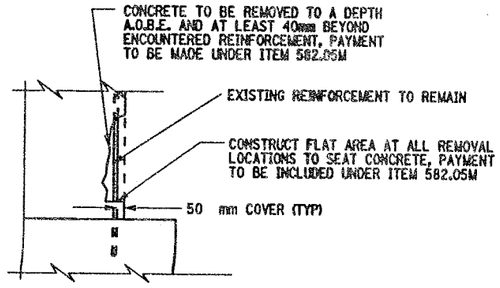

REMOVAL DETAIL
NOT TO SCALE

NOTES:

1. ALL DIMENSIONS SHOWN FOR CONCRETE REMOVAL ARE APPROXIMATE AND SHALL BE FIELD VERIFIED BY THE CONTRACTOR AND EIC.
2. REMOVE CONCRETE TO LIMITS SHOWN AS WELL AS TO SOUND CONCRETE, A.O.B.E.
3. WHEN REMOVING EXISTING CONCRETE, SAWCUT 5 mm MIN. TO PRODUCE NEAT REMOVAL LINES. ANY COST TO BE INCLUDED IN THE BID PRICE FOR ITEM 582.05M.
4. ALL EXISTING REINFORCEMENT TO REMAIN.
5. ELEVATIONS ARE GIVEN FOR QUANTITIY ESTIMATES ONLY.
6. REFER TO CONTRACT D250416 FOR ORIGINAL CONSTRUCTION DETAILS.

BRIDGE BEARING RESTORATION NOTES:

1. THE BRIDGE BEARING RESTORATION ITEM 15565.4302M SHALL INCLUDE ALL DESIGNATED WORK AS PER THE SPECIFICATION.
2. STRUCTURAL LIFTING SHALL BE USED WITH ALL EXPANSION BEARING RESTORATION.
3. IF THE CONTRACTOR ELECTS TO LIFT ONLY ONE GIRDER AT A TIME PER SPAN (TO A MAXIMUM OF 3 mm TO REMOVE LOAD FROM BEARINGS), NO VEHICULAR TRAFFIC RESTRICTIONS WILL BE REQUIRED AS STATED IN SPECIFICATION SECTION 585- STRUCTURAL LIFTING OPERATIONS.
4. BEARING RESTORATION SHALL INCLUDE REPLACEMENT OF BRONZE PLATE.
5. FIXED BEARINGS TO BE CLEANED IN PLACE. DO NOT DISASSEMBLE.
6. ALL BEARINGS AT BOTH THE EAST AND WEST ABUTMENT OF BIN 1072791 AND BIN 1072792 SHALL INCLUDE ITEM 15565.4302M - BRIDGE BEARING RESTORATION AND ITEM 585.01M - STRUCTURAL LIFTING OPERATION TYPE A.
7. SEE BR-8 FOR BEARING RESTORATION DETAILS.

AREAS OF PROPOSED WORK: ITEM 582.05M REMOVAL OF STRUCTURAL CONCRETE-REPLACEMENT WITH CLASS A CONCRETE

LIST OF ITEMS USED:

ITEM 15565.4302M - BRIDGE BEARING RESTORATION (EA)
ITEM 582.05M - REMOVAL OF STRUCTURAL CONCRETE - REPLACEMENT WITH CLASS A CONCRETE (CM)
ITEM 585.01M - STRUCTURAL LIFTING, TYPE A (EA)

ALL DIMENSIONS ARE IN m UNLESS OTHERWISE NOTED

AS BUILT REVISIONS

SIGNATURE DATE

INTERSTATE 481 SB
OVER
THOMPSON ROAD
ABUTMENT REPAIRS

STATE OF NEW YORK
DEPARTMENT OF TRANSPORTATION

FILENAME	REGION	DATE	DRAWING NO.
305613AC.A1B	3	10/02	AB11-1

DESIGN SUPERVISOR ____ JOB MANAGER ____ DESIGNED BY ____ ESTIMATED BY ____ CHECKED BY ____ DRAFTED BY ____ CHECKED BY ____

FED ROAD REG. NO.	STATE	CONTRACT NO.	SHEET NO.	TOTAL SHEETS
1	N.Y.	D259214	269	432

BRIDGE REHABILITATION PROJECT (ELEMENT SPECIFIC)
VARIOUS BRIDGES ON INTERSTATE 481
TOWNS OF DEWITT AND CICERO
ONONDAGA COUNTY
P.I.N. 305613 B.I.N. 1072791

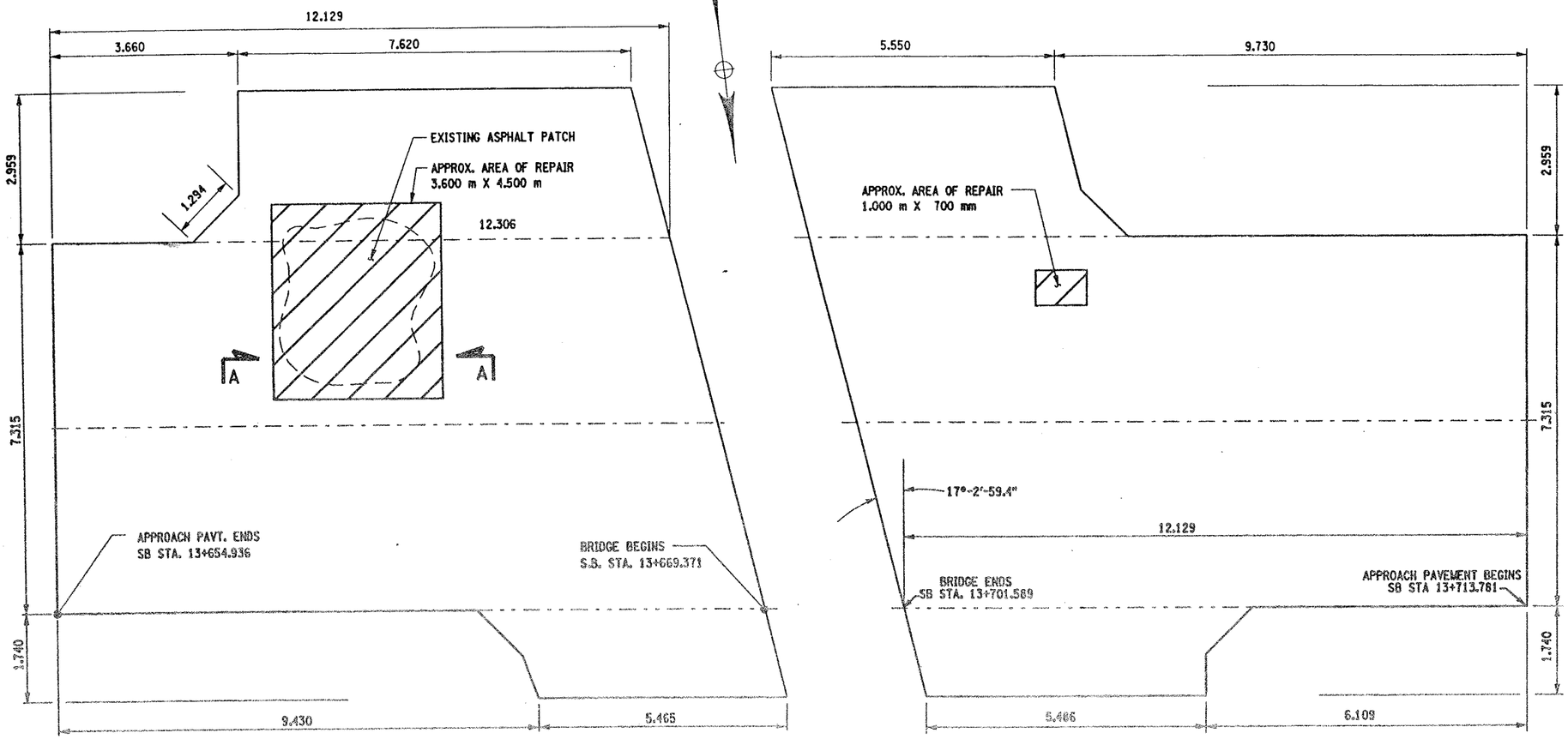

PLAN VIEW
APPROACH SLABS
SCALE: 1 TO 50

NOTES

1. ALL DIMENSIONS SHOWN FOR CONCRETE REMOVAL ARE APPROXIMATE AND SHALL BE FIELD VERIFIED BY THE CONTRACTOR AND EIC.
2. REMOVE CONCRETE TO LIMITS SHOWN AS WELL AS TO SOUND CONCRETE, A.O.B.E.
3. WHEN REMOVING EXISTING CONCRETE, SAWCUT 5 mm MIN. TO PRODUCE NEAT REMOVAL LINES.
4. ALL EXISTING REINFORCMENT TO REMAIN.
5. REFER TO CONTRACT D250416 FOR ORIGINAL CONSTRUCTION DETAILS.

AREAS OF WORK: ITEM 579.02M - REINFORCING BAR EXPOSURE, ITEM 578.030006M - SLAB RECONSTRUCTION CONCRETE, CLASS D OR E AND ITEM 558.01M TRANSVERSE SAWCUT GROOVING OF STRUCTURAL SLAB SURFACE

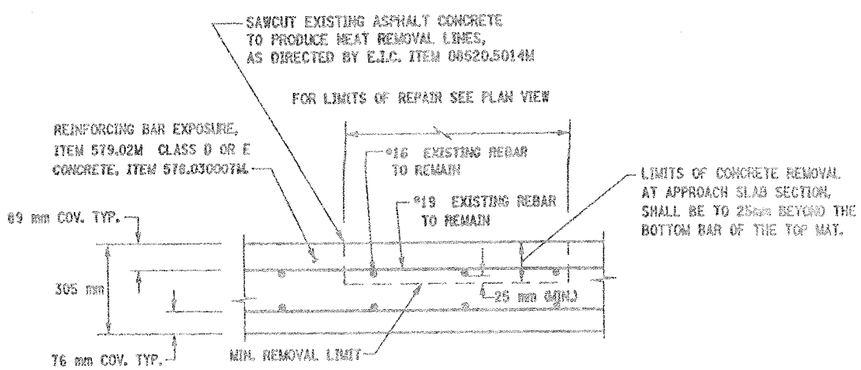

APPROACH SLAB REPAIR
SECTION A-A
SCALE: 5 TO 1

LIST OF ITEMS USED:

ITEM 08520.5014M - SAWCUT ASPHALT CONCRETE (M)
ITEM 558.01M - TRANSVERSE SAWCUT GROOVING OF STRUCTURAL SLAB SURFACE (SM)
ITEM 578.030007M - SLAB RECONSTRUCTION CONCRETE, CLASS D OR E (SM)
ITEM 579.02M - REINFORCING BAR EXPOSURE (SM)

ALL DIMENSIONS ARE IN m UNLESS OTHERWISE NOTED

AS BUILT REVISIONS

SIGNATURE DATE

INTERSTATE 481 SB
OVER
THOMPSON ROAD
APPROACH SLAB

STATE OF NEW YORK
DEPARTMENT OF TRANSPORTATION

FILENAME	REGION	DATE	DRAWING NO.
305613AC.A1A	3	10/02	AS11-1

DESIGN SUPERVISOR ____ JOB MANAGER ____ DESIGNED BY ____ ESTIMATED BY ____ CHECKED BY ____ DRAFTED BY ____ CHECKED BY ____

FED ROAD REG. NO.	STATE	CONTRACT NO.	SHEET NO.	TOTAL SHEETS
1	N.Y.	D259214	270	432

BRIDGE REHABILITATION PROJECT (ELEMENT SPECIFIC)
VARIOUS BRIDGES ON INERSTATE 481
TOWNS OF DEWITT AND CICERO
ONONDAGA COUNTY
P.I.N. 305613 | B.I.N. 1093510

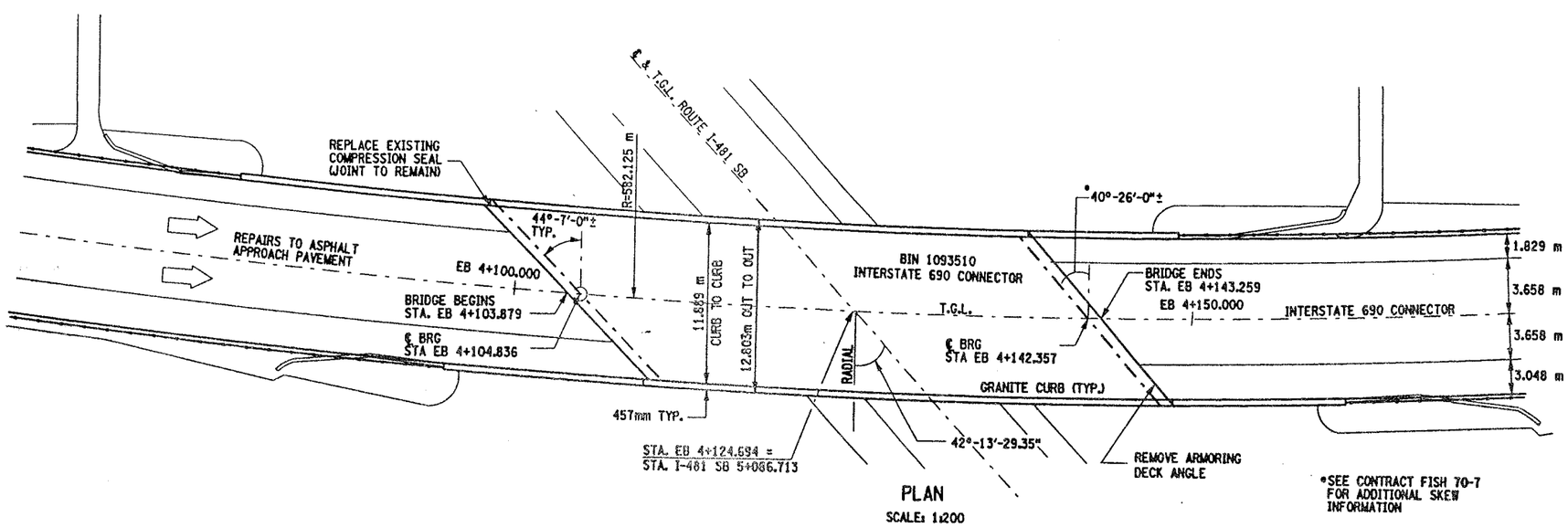

PLAN
SCALE: 1:200

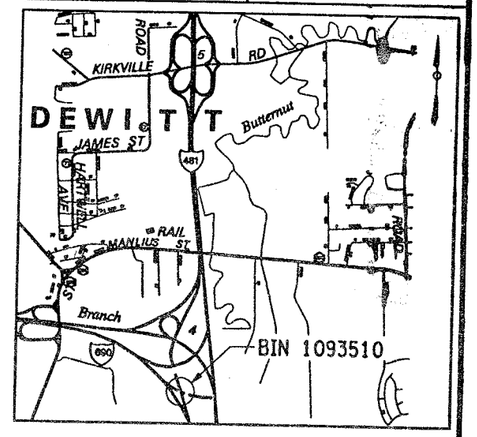

LOCATION MAP
QUADRANGLE
SCALE: 1:24000

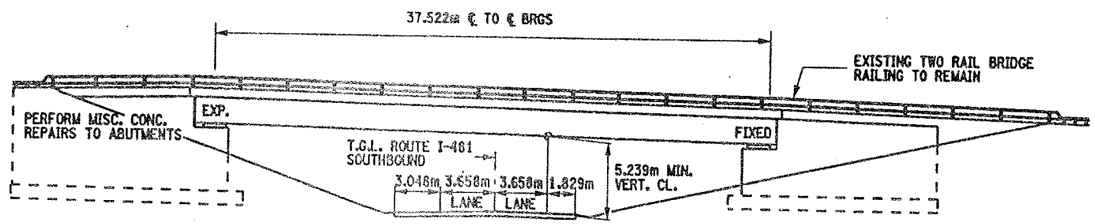

ELEVATION
SCALE: 1:200

WORK TO BE DONE ON BIN 1093510:

1. ESTABLISH MP&T SCHEME FOR STAGE CONSTRUCTION.
2. REPLACE EXISTING COMPRESSION SEAL AT BEG. ABUTMENT (WEST). EXISTING JOINT & ARMORING DECK ANGLE TO REMAIN.
3. REMOVE EXISTING ARMORED DECK ANGLE AT END ABUTMENT (EAST).
4. REPAIR DECK AREA AT END ABUTMENT (EAST), WHERE ARMORING DECK ANGLE WAS REMOVED.
5. PERFORM MINOR REPAIRS TO ASPHALT APPROACHES (SEE JD-45).
6. PERFORM MISCELLANEOUS REPAIRS TO CONCRETE ELEMENTS AT ABUTMENT.

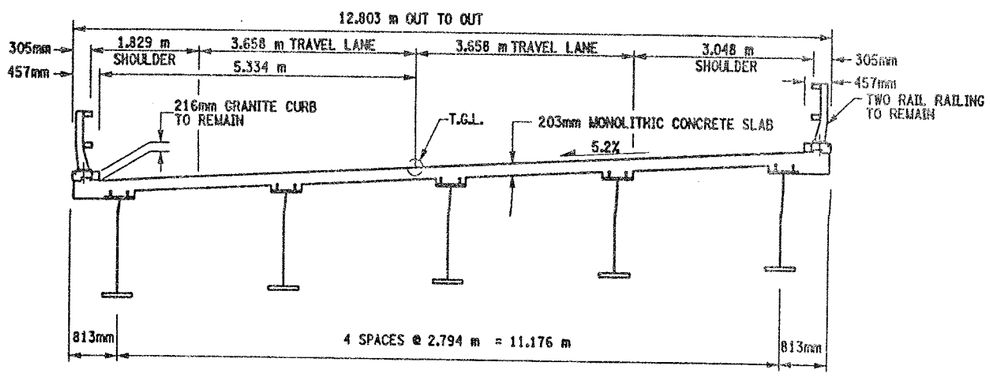

TYPICAL BRIDGE SECTION
SCALE: 1:50

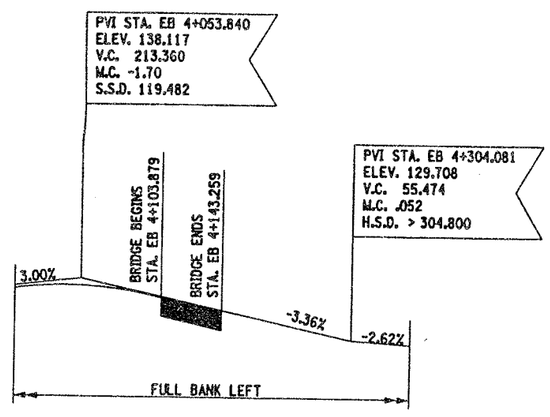

PROFILE
NOT TO SCALE

BIN 1093510

ALL DIMENSIONS ARE IN m UNLESS OTHERWISE NOTED

AS BUILT REVISIONS

SIGNATURE DATE

INTERSTATE 690 RAMP
OVER
INTERSTATE 481 SB

PLAN, ELEVATION AND BRIDGE SECTION

STATE OF NEW YORK
DEPARTMENT OF TRANSPORTATION

FILENAME	REGION	DATE	DRAWING NO.
305613AD.G1A	3	10/02	GP12-1

DESIGN SUPERVISOR ____ JOB MANAGER ____ DESIGNED BY ____ CHECKED BY ____ ESTIMATED BY ____ DRAFTED BY ____ CHECKED BY ____

1072791

FED ROAD REG. NO.	STATE	CONTRACT NO.	SHEET NO.	TOTAL SHEETS
1	N.Y.	D259214	348	432

BRIDGE REHABILITATION PROJECT (ELEMENT SPECIFIC)
VARIOUS BRIDGES ON INTERSTATE 481
TOWNS OF DEWITT AND CICERO
ONONDAGA COUNTY
P.I.N. 305613 B.I.N. 1072791 & 1072792

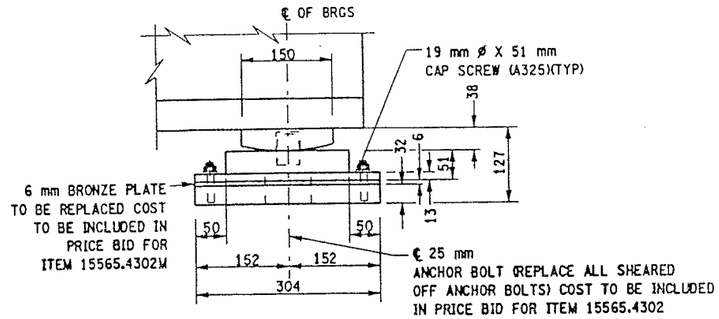

EXPANSION SIDE ELEVATION
SCALE: 1:10

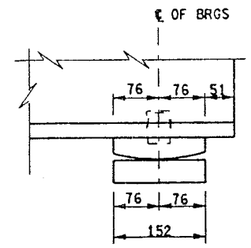

FIXED SIDE ELEVATION
NOT TO SCALE

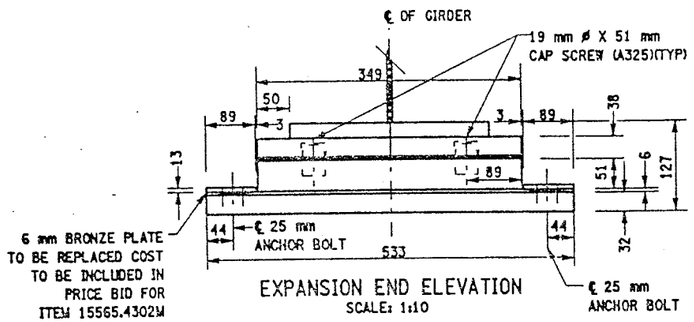

EXPANSION END ELEVATION
SCALE: 1:10

LOW STEEL EXPANSION BEARING DETAILS
BIN 1072791 - EAST ABUTMENT
BIN 1072792 - EAST ABUTMENT

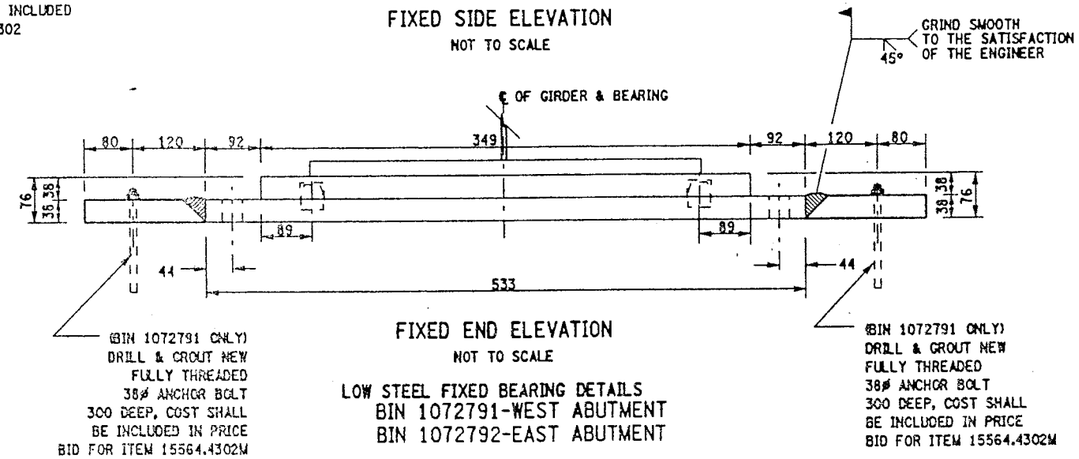

FIXED END ELEVATION
NOT TO SCALE

LOW STEEL FIXED BEARING DETAILS
BIN 1072791-WEST ABUTMENT
BIN 1072792-EAST ABUTMENT

BRIDGE BEARING RESTORATION NOTES:

1. BRIDGE BEARING RESTORATION ITEM 15565.4302M SHALL INCLUDE ALL DESIGNATED WORK AS PER THE SPECIFICATION.
2. STRUCTURAL LIFTING SHALL BE USED WITH ALL EXPANSION BEARING RESTORATION.
3. IF THE CONTRACTOR ELECTS TO LIFT ONLY ONE GIRDER AT A TIME PER SPAN (TO A MAXIMUM OF 3 mm TO REMOVE LOAD FROM BEARINGS), NO VEHICULAR TRAFFIC RESTRICTIONS WILL BE REQUIRED AS STATED IN SPECIFICATIONS SECTON 585-STRUCTURAL LIFTING OPERATIONS.
4. BEARING RESTORATION SHALL AS A MINIMUM, AND IN ALL CASES INCLUDE REPLACEMENT OF BRONZE PLATE.
5. FIXED BEARING TO BE CLEANED IN PLACE. DO NOT DISASSEMBLE.

JACKING NOTES:

THE METHOD OF LIFTING SHALL BE APPROVED BY THE DEPUTY CHEIF ENGINEER (STRUCTURES), DCES, TWO WEEKS PRIOR TO THE START OF THE WORK.

NO LIFTING WILL BE ALLOWED UNTIL ALL TEMPORARY SUPPORTS ARE SECURED.

WHEN POSSIBLE, THERE WILL BE NO LIVE LOAD DURING LIFTING.

LIFTING SHALL BE CONFINED TO ONE END OF A SPAN AT ANY ONE TIME.

IF THE CONTRACTOR ELECTS TO LIFT ONLY ONE GIRDER AT A TIME PER PIER (TO A MAXIMUM OF 3 mm TO REMOVE LOAD FROM BEARING), NO VEHICULAR TRAFFIC RESTRICTIONS WILL BE REQUIRED AS STATED IN THE SPECIFICATION SECTION 585-STRUCTURAL LIFTING OPERATIONS.

ALL MATERIALS ASTM A588
EXCEPT AS NOTED

LIST OF ITEMS USED:

ITEM 15565.4302 M - BRIDGE BEARING RESTORATION (EA)
ITEM 585.01M - STRUCTURAL LIFTING (TYPE A) (EA)

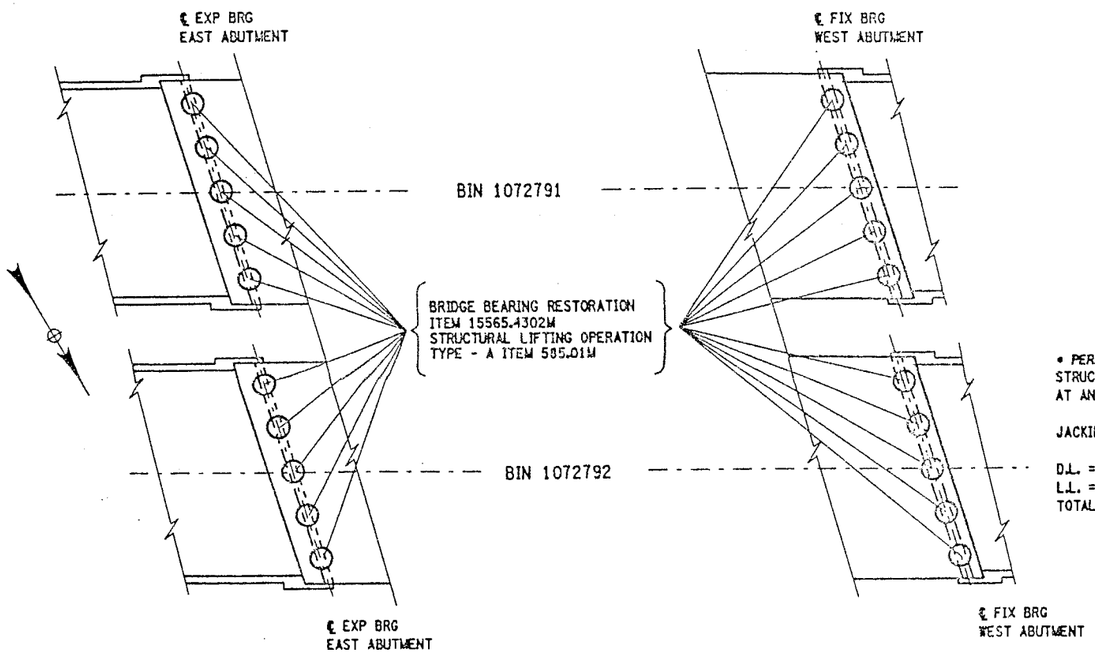

BRIDGE PLAN SCHEMATIC
NOT TO SCALE

* *PERFORM STRUCTURAL LIFTING UNDER ITEM 585.01M* - STRUCTURAL LIFTING OPERATIONS - TYPE A (LIFTING AT AN ABUTMENT).

JACKING LOADS:

D.L. = 50 MT
L.L. = 50 MT
TOTAL = 1000 MT

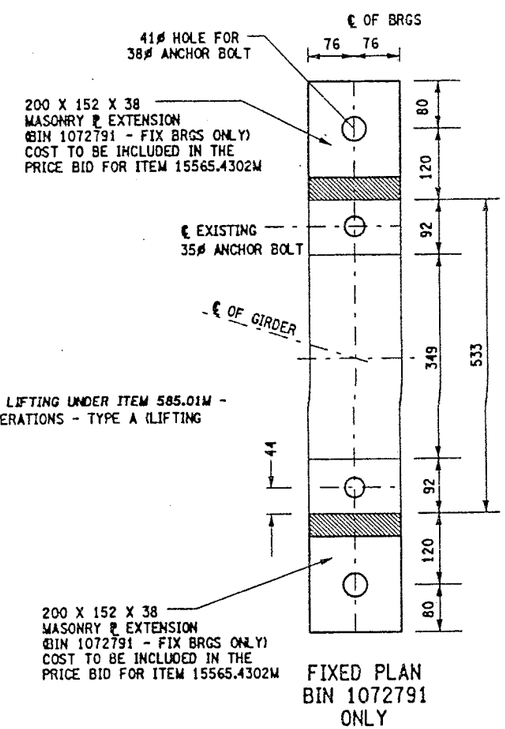

FIXED PLAN
BIN 1072791
ONLY

ALL DIMENSIONS ARE IN mm UNLESS OTHERWISE NOTED

AS BUILT REVISIONS

SIGNATURE DATE

INTERSTATE 481 SB & NB
OVER
THOMPSON ROAD

BEARING RESTORATION DETAILS

STATE OF NEW YORK
DEPARTMENT OF TRANSPORTATION

FILENAME	REGION	DATE	DRAWING NO.
305613ZZJM1A	3	10/02	BR-8

CHECKED BY
DRAFTED BY
ESTIMATED BY
CHECKED BY
DESIGNED BY
JOB MANAGER
DESIGN SUPERVISOR

FED ROAD REG. NO.	STATE	CONTRACT NO.	SHEET NO.	TOTAL SHEETS
1	N.Y.	D259214	362	432

BRIDGE REHABILITATION PROJECT (ELEMENT SPECIFIC)
VARIOUS BRIDGES ON INTERSTATE 481
TOWNS OF DEWITT AND CICERO
ONONDAGA COUNTY
P.I.N. 305613 | B.I.N. ALL BINS

BRIDGE JOINT TABLE

B.I.N. NUMBER	JOINT LOCATION	JOINT SKEW	SPAN(S) LENGTH FOR JOINT (METERS)	JOINT BEND LOCAT'N RT	JOINT BEND LOCAT'N LT	EXISTING JOINT TYPE	PROPOSED JOINT TYPE	CURB TO CURB DISTANCE (METERS) (SEE NOTES)	FASCIA & MEDIAN LENGTH (METERS) LT/RT	TOTAL LENGTH (METERS)	JOINT ITEM NUMBER(S)	DRAWING NUMBER SECT VIEW	DRAWING NUMBER PLAN VIEW	DRAWING NUMBER FASCIA DETAIL
1072530	EAST ABUT.	0°-00'-00"	33.528	N	N	ACJ	MAC-5	15.850	.457/.457	16.764	567.35M	JD-30	JD-29	JD-30
	WEST ABUT.	0°-00'-00"	37.795	N	N	ACJ	MAC-5	15.850	.457/.457	16.764	567.35M	JD-30	JD-29	JD-30
1072571	SOUTH ABUT.	20°-29'-45.2"	44.196	N	N	ACJ	MAC-6	14.481	.488/.488	15.457	567.36M	JD-32	JD-31	JD-32
	NORTH ABUT.	20°-29'-45.2"	——	N	N	ACJ	MAC-1	15.456	.488/.488	16.428	567.31M	JD-32	JD-31	JD-32
1072572	SOUTH ABUT.	21°-09'-2.1"	44.196	N	N	ACJ	MAC-6	12.746	.490/.490	13.726	567.36M	JD-34	JD-33	JD-34
	NORTH ABUT.	21°-09'-2.1"	——	N	N	ACJ	MAC-1	12.746	.490/.490	13.726	567.31M	JD-34	JD-33	JD-34
1072581	SOUTH ABUT.	3°59'-27.5"	37.033	N	N	ACJ	MAC-5	11.917	.458/.458	12.833	567.35M	JD-36	JD-35	JD-36
	NORTH ABUT.	3°-59'-27.5"	——	N	N	ACJ	MAC-1	11.917	.458/.458	12.833	567.31M	JD-36	JD-35	JD-36
1072582	SOUTH ABUT.	3°-51'-57.9"	37.033	N	N	ACJ	MAC-5	11.915	.458/.458	12.831	567.35M	JD-38	JD-37	JD-38
	NORTH ABUT.	3°-51'-57.9"	——	N	N	ACJ	MAC-1	11.915	.458/.458	12.831	567.31M	JD-38	JD-37	JD-38
1072781	EAST ABUT.	16°-26'-24"	——	N	N	ACJ	MAC-1	12.500	.530/.530	13.560	567.31M	JD-40	JD-39	JD-40
	WEST ABUT.	16°-26'-24"	33.635	N	N	ACJ	MAC-5	12.500	.530/.530	13.560	567.35M	JD-40	JD-39	JD-40
1072782	EAST ABUT.	16°-26'-24"	——	N	N	ACJ	MAC-1	13.183	.530/.530	14.243	567.31M	JD-42	JD-41	JD-42
	WEST ABUT.	16°-26'-24"	31.394	N	N	ACJ	MAC-5	12.589	.530/.530	13.649	567.35M	JD-42	JD-41	JD-42
1072791	EAST ABUT.	17°-02'-59.4"	30.785	N	N	ACJ	RCS	12.566	.531/.531	13.628	16567.64M	JD-47	JD-43	JD-47
	WEST ABUT.	17°-02'-59.4"	——	N	N	ACJ	RCS	12.566	.531/.531	13.628	16567.64M	JD-47	JD-43	JD-47
1072792	EAST ABUT.	17°-02'-59.4"	30.785	N	N	ACJ	MAC-5	12.566	.530/.530	14.015	567.35M	JD-44	JD-43	JD-44
	WEST ABUT.	17°-02'-59.4"	——	N	N	ACJ	MAC-1	12.566	.530/.530	14.015	567.31M	JD-44	JD-43	JD-44
1093510	WEST ABUT.	44°-07'-00"	——	N	N	ACJ/ADA	RCS	16.560	.637/.637	17.834	16567.64M	JD-46	JD-45	JD-46
	EAST ABUT.	40°-26'-00"	37.522	N	N	ADA	RADA	15.620	——	15.620	——	JD-46	JD-45	——

LEGEND

EXISTING JOINT TYPE:

ACJ = ARMORED COMPRESSION JOINT SYSTEM
MOD = MODULAR JOINT SYSTEM
MAC = MODIFIED ARMORED COMPRESSION SYSTEM (NO HORIZ. ARMORING ANGLE)
ADA = ARMORED DECK ANGLE
SS = STRIP SEAL JOINT
OPEN = OPEN JOINT

PROPOSED JOINT TYPE:

MAC-1 = MOD. ARM./COMP. SEAL JT. SYS. (A-1)
MAC-2 = MOD. ARM./COMP. SEAL JT. SYS. (A-2)
MAC-5 = MOD. ARM./COMP. SEAL JT. SYS. (A-5)
MAC-6 = MOD. ARM./COMP. SEAL JT. SYS. (A-6)
RCS = REPLACE EXISTING COMPRESSION SEAL
RADA = REMOVE ARMOR DECK ANGLE
MOD-1 = MODULAR JT. SYS. (ONE-CELL)
MOD-2 = MODULAR JT. SYS. (TWO-CELL)

JOINT BEND LOCATION:

N = NO BENDS
CRB = CURB LINE
PAV'T = PAVEMENT

GENERAL NOTES:

- ALL MEASUREMENTS SHALL BE FIELD VERIFIED.
- CURB TO CURB LENGTHS ARE MEASURED ALONG ℄ OF JOINT.
- MULTIPLE DIMENSIONS ARE SHOWN LOOKING UP-STATION, LEFT TO RIGHT.
- ALL DIMENSIONS ARE SHOWN IN METERS.

INFORMATIONAL NOTES:

BIN 1072530 - NO JOINT AT PIER.

BIN 1072791 - REPLACE COMPRESSION SEALS
BEG. ABUT. (EAST), TYPE A-5
END ABUT. (WEST), TYPE A-1

FOR JOINT DETAILS REFER TO THE FOLLOWING DRAWINGS:

DWG. NO. JD-1 - MODIFIED ARMORED COMPRESSION SEAL JOINT SYSTEM.
DWG. NO. JD-24 - ONE-CELL MODULAR JOINT SYSTEM.
DWG. NO. JD-25 - TWO-CELL MODULAR JOINT SYSTEM.

LIST OF BRIDGE JOINT ITEMS USED:

ITEM 566.01M - MODULAR EXP. JOINT SYSTEM ONE-CELL (M)
ITEM 566.02M - MODULAR EXP. JOINT SYSTEM TWO-CELL (M)
ITEM 567.31M - MODIFIED ARMORED JOINT SYSTEM W/ COMP. SEAL TYPE A1 (m)
ITEM 567.32M - MODIFIED ARMORED JOINT SYSTEM W/ COMP. SEAL TYPE A2 (m)
ITEM 567.35M - MODIFIED ARMORED JOINT SYSTEM W/ COMP. SEAL TYPE A5 (m)
ITEM 567.36M - MODIFIED ARMORED JOINT SYSTEM W/ COMP. SEAL TYPE A6 (m)
ITEM 16567.640001M - REPLACE COMPRESSION SEAL FOR EXISTING BRDGE JOINTS (m)

ALL DIMENSIONS ARE IN m UNLESS OTHERWISE NOTED

AS BUILT REVISIONS

SIGNATURE | DATE

INTERSTATE 481 VARIOUS BRIDGES

BRIDGE JOINT TABLE

STATE OF NEW YORK
DEPARTMENT OF TRANSPORTATION

FILENAME	REGION	DATE	DRAWING NO.
305613AJ.JA1	3	10/02	JT-2

DESIGN SUPERVISOR ____ JOB MANAGER ____ DESIGNED BY ____ CHECKED BY ____ DRAFTED BY ____ CHECKED BY ____ ESTIMATED BY ____

FED ROAD REG. NO.	STATE	CONTRACT NO.	SHEET NO.	TOTAL SHEETS
1	N.Y.	D259214	365	432

BRIDGE REHABILITATION PROJECT (ELEMENT SPECIFIC)
VARIOUS BRIDGES ON INTERSTATE 481
TOWNS OF DEWITT AND CICERO
ONONDAGA COUNTY
P.I.N. 305613 B.I.N. ALL BIN'S

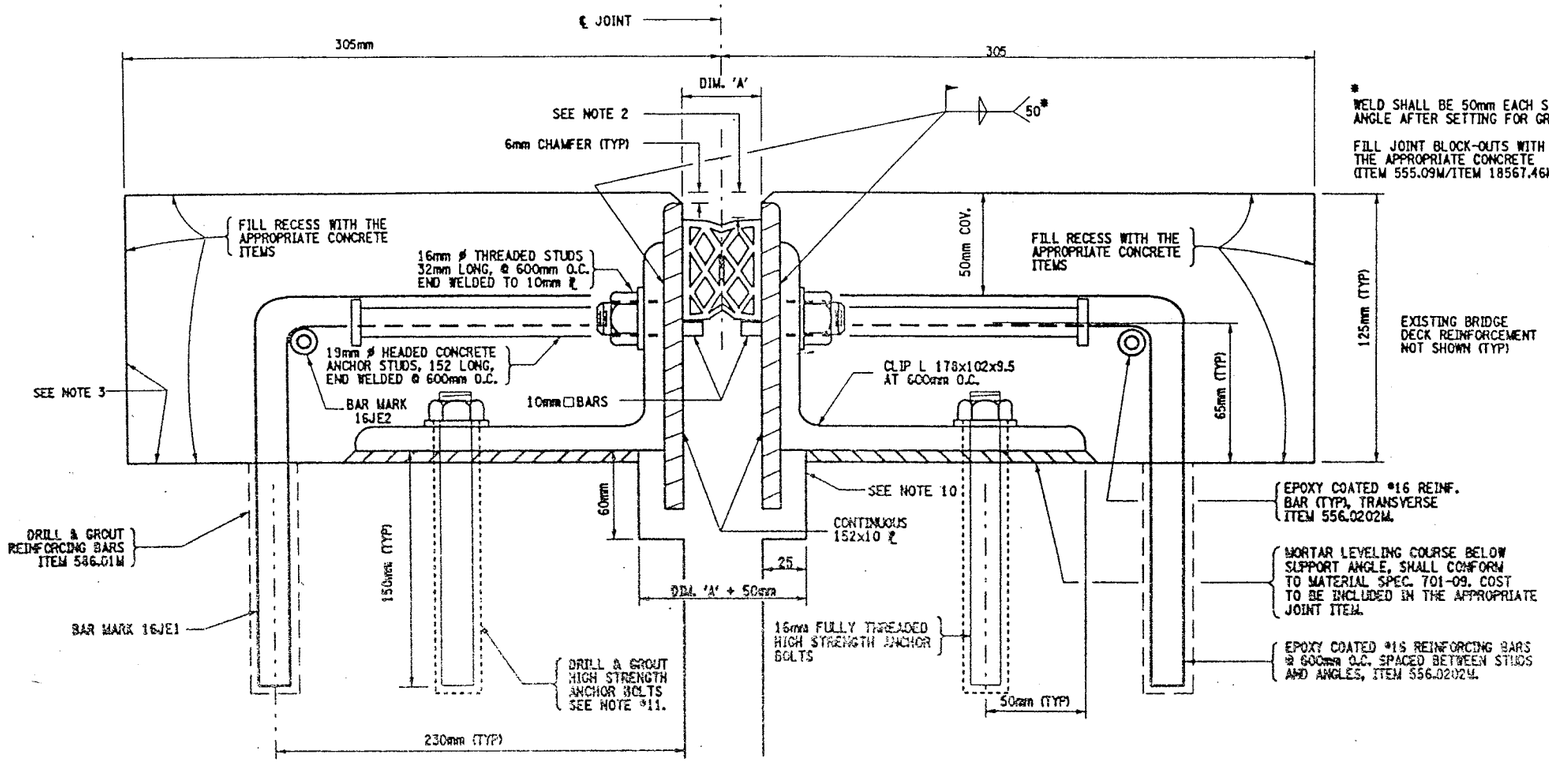

* WELD SHALL BE 50mm EACH SIDE OF ANGLE AFTER SETTING FOR GRADE

FILL JOINT BLOCK-OUTS WITH THE APPROPRIATE CONCRETE (ITEM 555.09M/ITEM 18567.46M)

MODIFIED ARMORED COMPRESSION JOINT DETAIL

FOR INSTALLATION LOCATIONS SEE JOINT TABLE

NOT TO SCALE

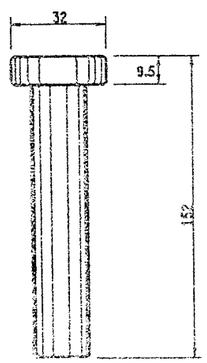

DETAIL OF HEADED CONCRETE ANCHOR STUD

NOT TO SCALE

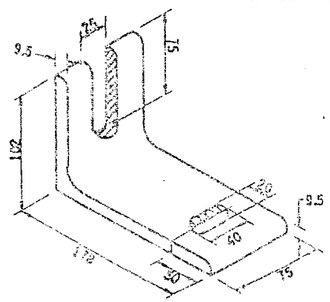

DETAIL OF CLIP ANGLE

NOT TO SCALE

NOTE:

ALL CUTTING TO BE DONE WITH A COPING SAW, SOAP AND WATER

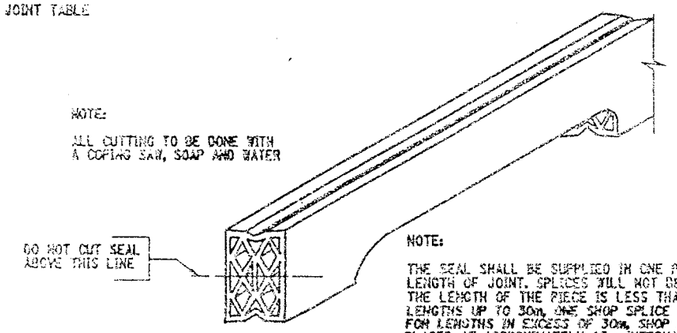

NOTE:

THE SEAL SHALL BE SUPPLIED IN ONE PIECE FOR THE FULL LENGTH OF JOINT. SPLICES WILL NOT BE PERMITTED WHEN THE LENGTH OF THE PIECE IS LESS THAN 15m. FOR LENGTHS UP TO 30m, ONE SHOP SPLICE WILL BE PERMITTED. FOR LENGTHS IN EXCESS OF 30m, SHOP SPLICES MAY BE PLACED AT APPROXIMATELY 15m INTERVALS.

DETAIL FOR CUTTING SEAL

NOT TO SCALE

GENERAL NOTES:

1. THE TEMPERATURE OF THE BRIDGE MUST BE TAKEN ON THE STRUCTURAL STEEL SURFACE TO DETERMINE THE TEMPERATURE CORRECTION FOR THE JOINT OPENINGS.
2. THIS DEPTH SHALL BE INDICATED ON THE SHOP DRAWINGS AND SHALL BE SUCH THAT WHEN THE SEAL IS COMPRESSED TO 50% OF ITS NORMAL WIDTH, THE TOP OF THE SEAL SHALL BE NOT LESS THAN 6mm NOR MORE THAN 19mm BELOW THE TOP OF THE ROADWAY.
3. RECESSES RECEIVING ITEM 555.09M. AFTER SURFACE PREPARATION, THOROUGHLY WET THE CONCRETE SURFACE AND ALL POROUS SURFACES TO BE IN CONTACT WITH NEW CONCRETE, FOR 12 HOURS. NOTE THE USE OF MATERIAL SPECIF. 705-22 PORTLAND CEMENT MORTAR BONDING GROUT HAS BEEN ELIMINATED, SEE INSERT IN PROJECT PROPOSAL.
4. A WATER-TIGHT INTEGRITY TEST SHALL BE PERFORMED BY THE CONTRACTOR AT ALL COMPRESSION SEAL JOINT INSTALLATIONS. THE FOLLOWING TEST PARAMETERS SHALL BE INCORPORATED IN THE TEST:
   1. A 15 MINUTE MINIMUM PERIOD OF STANDING WATER, WITH A 25mm MINIMUM DEPTH SHALL BE USED.
   2. IN ADDITION, IN LOCATIONS OF COPED AREAS OF THE SEAL, BENDS, ETC., WATER PRESSURE SHALL BE APPLIED, TO THE SATISFACTION OF THE EIC FOR A 15 MINUTE PERIOD.
   3. LIMITS OF TEST AREA SHALL BE FROM FACE OF CURB TO FACE OF CURB ON THE DECK SURFACE.
5. NO PAYMENT WILL BE MADE TO THE CONTRACTOR FOR THE JOINT IF, IN THE OPINION OF THE ENGINEER, THE INSTALLED JOINT LEAKS WITHIN THE 15 MINUTE TEST PERIOD.
6. PRIOR TO THE START OF WORK AT EACH JOINT, THE CONTRACTOR SHALL SUBMIT A WRITTEN PLAN FOR THE SPECIFICS OF THE TESTING, INCLUDING CONTAINMENT OF THE WATER AND THE METHOD TO BE USED FOR ACCESS BY THE E.I.C. TO THE BOTTOM OF THE JOINT BEING TESTED.
7. THE COST OF ALL LABOR, EQUIPMENT AND MATERIALS REQUIRED FOR THE TESTING WHICH INCLUDES, BUT IS NOT LIMITED TO:
   1. A CONTAINMENT SYSTEM FOR THE TEST WATER.
   2. PROVISIONS FOR E.I.C. ACCESS TO THE BOTTOM OF THE JOINT.

   SHALL BE INCLUDED IN THE PRICE BID FOR THE RESPECTIVE JOINT ITEMS.
8. THE COST OF ALL LABOR, EQUIPMENT, AND MATERIALS TO INSTALL THE NEW JOINT SHALL BE INCLUDED IN THE UNIT PRICE BID FOR THE APPROPRIATE JOINT ITEM.
9. MORTAR LEVELING COURSE SHALL CONFORM TO MATERIAL SPECIFICATION 701-09 AND SHALL BE INCLUDED IN THE PRICE BID FOR THE APPROPRIATE JOINT ITEM.
10. THE DIMENSIONS OF THE REMOVAL AREA UNDER THE 152x10 PLATES ARE SHOWN TO ALLOW SPACE FOR THE PLATES TO REST FREELY. IF THERE IS ALREADY ADEQUATE SPACE, NO CONCRETE REMOVAL OR REPLACEMENT IS REQUIRED IN THIS AREA.
11. 16 mm ø ASTM A325M ANCHOR BOLT TO BE DRILLED AND GROUTED IN PLACE IN ACCORDANCE WITH THE REQUIREMENTS OF SUB-SECTION 586-3.02. GROUTING MATERIALS SHALL BE IN ACCORDANCE WITH MATERIALS SUB-SECTION 701-07 ANCHORING MATERIALS-CHEMICALLY CURING. HOLES TO BE DRILLED TO THE DIAMETER AND DEPTH RECOMMENDED BY THE MANUFACTURER OF THE GROUTING MATERIAL (MIN. DEPTH OF 150 mm). THE COST OF THE ANCHORS, INCLUDING DRILLING AND GROUTING, SHALL BE INCLUDED IN THE UNIT PRICE BID FOR THE APPROPRIATE JOINT SYSTEM ITEM.
12. IT IS DESIRABLE TO HAVE THE ARMORED JOINT WITH ITS COMPRESSION SEAL ASSEMBLED IN THE SHOP AND DELIVERED TO THE JOB SITE ALL SET FOR INSTALLATION IN ITS PREFORMED RECESS IN THE STRUCTURAL SLAB. IN CASES WHERE THE ARMORED JOINT CANNOT BE ASSEMBLED IN THE SHOP, DUE TO ITS EXCESSIVE LENGTH CAUSING SHIPPING PROBLEMS, THE JOINT SHALL BE SEALED WITH THE COMPRESSION SEAL BEFORE THE STRUCTURE IS OPENED TO TRAFFIC INCLUDING CONSTRUCTION TRAFFIC, AND BEFORE DIS CONTINUING OPERATIONS WHEN WORK IS SUSPENDED DURING THE WINTER.

ALL DIMENSIONS ARE IN mm UNLESS OTHERWISE NOTED

EPOXY POLYSULFIDE GROUT NOTE:

CONTRACTOR MAY WITH THE APPROVAL OF THE ENGINEER USE MATERIAL SPECIFICATION 721-03 EPOXY POLYSULFIDE GROUT, AT THE RECESSES. INSTEAD OF THE 12 HOUR CONTINUOUS PREWETTING REQUIREMENTS (PROJECT PROPOSAL). CONTRACTOR MUST ENSURE PROPER CONSTRUCTION PRACTICES ARE FOLLOWED WHEN USING THIS GROUT. THE USE OF EPOXY POLYSULFIDE GROUT SHALL BE AT NO ADDITIONAL COST TO THE STATE.

SEALS (mm)			ARMORED JOINT SYSTEM	
TYPE	NOMINAL WIDTH	DIM. "A" @ 20°C.	TYPE	END CONDITION
1	44	25	A1	Fixed End Only
2	51	30	A2	Exp. up to 18 m
3	64	38	A3	Exp. over 18 m to 23 m
4	76	44	A4	Exp. over 23 m to 27 m
5	89	52	A5	Exp. over 27 m to 38 m
6	102	60	A6	Exp. over 38 m to 46 m

Maximum Skew Limits: Fixed End - No Limit
Exp. End - 45° A2 thru A6

LIST OF ITEMS USED:

ITEM 555.09M - STRUCT. CONCRETE, CLASS "HP" (CM)
ITEM 556.0202M - EPOXY COATED BAR REINF. FOR STRUCT. (Kg)
ITEM 567.31M - MOD. ARMORED JOINT SYSTEM W/ COMP. SEAL TYPE A1 (m)
ITEM 567.32M - MOD. ARMORED JOINT SYSTEM W/ COMP. SEAL TYPE A2 (m)
ITEM 567.35M - MOD. ARMORED JOINT SYSTEM W/ COMP. SEAL TYPE A5 (m)
ITEM 567.36M - MOD. ARMORED JOINT SYSTEM W/ COMP. SEAL TYPE A6 (m)
ITEM 18567.46M - ELASTOMERIC CONC. FOR BRIDGE JT. SYSTEMS (M)
ITEM 586.01M - DRILL & GROUT REINF. BARS (mm)

AS BUILT REVISIONS

SIGNATURE DATE

INTERSTATE 481

COMPRESSION SEAL JOINT DETAILS

STATE OF NEW YORK
DEPARTMENT OF TRANSPORTATION

FILENAME	REGION	DATE	DRAWING NO.
305613AJJA1	3	10/02	JD-1

DESIGN SUPERVISOR ___ JOB MANAGER ___ DESIGNED BY ___ CHECKED BY ___ ESTIMATED BY ___ DRAFTED BY ___ CHECKED BY ___

FED ROAD REG. NO.	STATE	CONTRACT NO.	SHEET NO.	TOTAL SHEETS
1	N.Y.	D259214	411	432

BRIDGE REHABILITATION PROJECT (ELEMENT SPECIFIC)
VARIOUS BRIDGES ON INTERSTATE 481
TOWNS OF DEWITT AND CICERO
ONONDAGA COUNTY
P.I.N. 305613 | B.I.N. VARIOUS

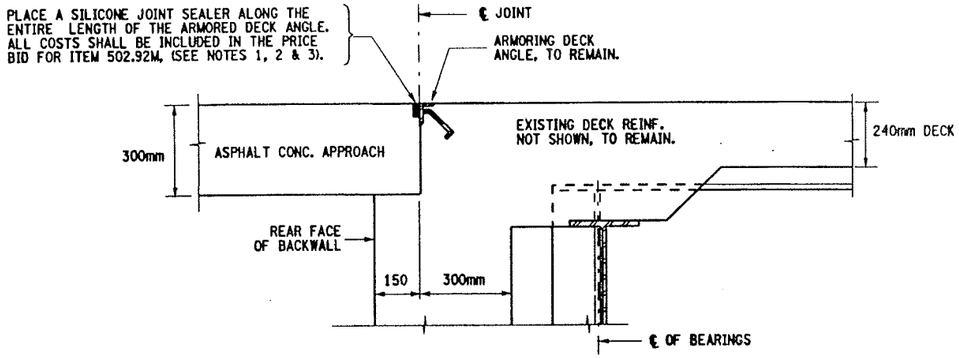

TYPICAL SECTION VIEW
EXISTING ARMORED DECK ANGLE AT ABUTMENT

BIN 1093520 - W. ABUT. (BEG. ABUT.)
BIN 1093540 - N. ABUT. (END ABUT.)
NOT TO SCALE

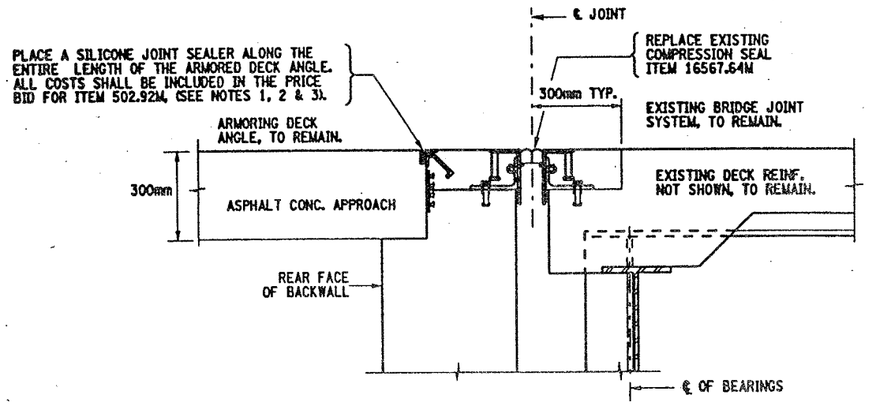

TYPICAL SECTION VIEW
EXISTING ARMORED JOINT SYSTEM AT ABUTMENT

BIN 1093520 - E. ABUT. (END ABUT.)
BIN 1093540 - S. ABUT. (BEG. ABUT.)
NOT TO SCALE

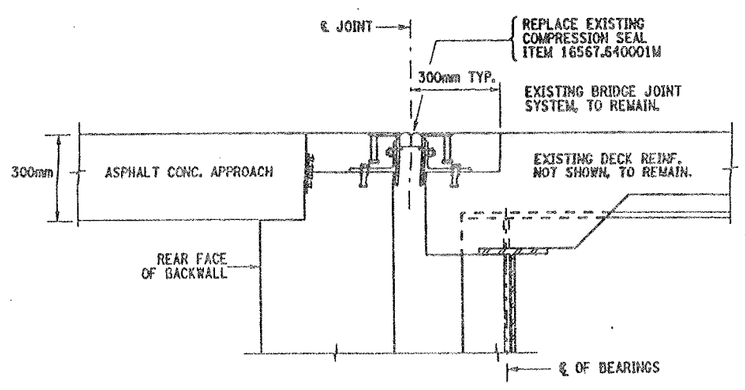

TYPICAL SECTION VIEW
EXISTING ARMORED JOINT SYSTEM AT ABUTMENT

BIN 1072791 - BOTH ABUTMENTS

NOT TO SCALE

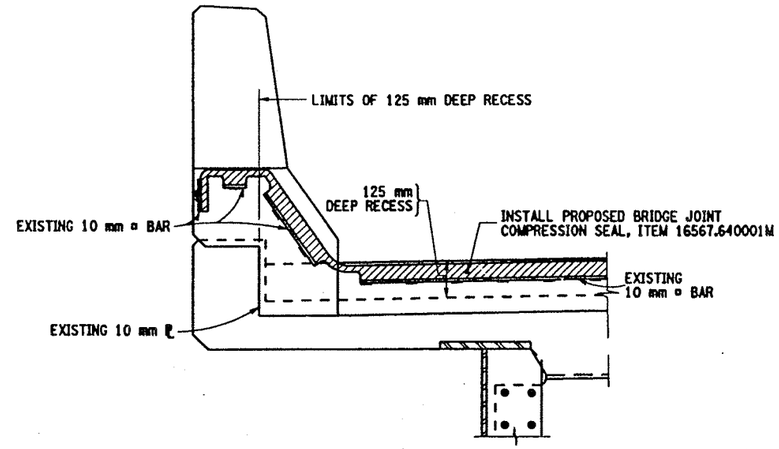

PROPOSED JOINT SEAL
TYPICAL (CONCRETE PARAPET)

BIN 1072791 - REPLACE SEAL AT BOTH ABUTMENTS

NOT TO SCALE

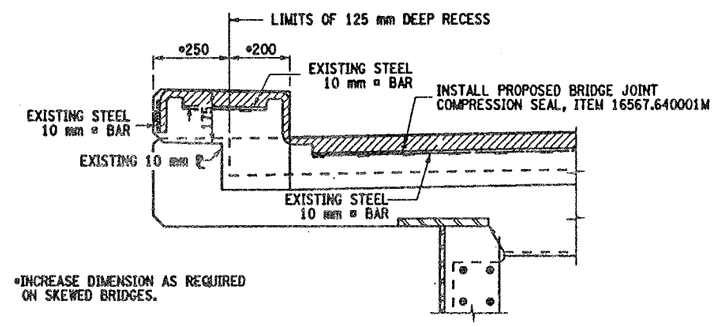

*INCREASE DIMENSION AS REQUIRED ON SKEWED BRIDGES.

PROPOSED JOINT SEAL
TYPICAL (BRUSH CURB)

BIN 1093520 - EAST ABUTMENT
BIN 1093540 - SOUTH ABUTMENT

NOT TO SCALE

DETAILS ON THIS SHEET PERTAIN TO BIN'S 1072791, 1093520 & 1093540.

NOTES:

1) TO SEAL THE INTERFACE BETWEEN THE EXISTING ASPHALT APPROACH AND THE EXISTING ARMOR DECK ANGLE, USE A SILICONE JOINT SEALER FROM THE MATERIALS BUREAU APPROVED LIST.

2) THE SILICONE JOINT SEALER SHALL BE PLACED TRANSVERSELY FOR THE ENTIRE LENGTH OF THE ARMORED DECK ANGLE.

3) PRIOR TO PLACEMENT OF THE SILICONE JOINT SEALER THE AREA SHALL BE CLEANED AND FREE OF ANY LOOSE MATERIAL TO THE SATISFACTION OF THE ENGINEER.

4) REFER TO DWG. NO. JT-2 AND JT-3 FOR ADDITIONAL INFORMATION.

5) NO PLAN VIEW SHOWN FOR THESE STRUCTURES.

6) REFER DWG. NO. JD-43, FOR ADDITIONAL INFORMATION BIN 1072791.

WORK TO BE DONE:

BIN 1072791 -

REPLACE EXISTING COMPRESSION SEALS AT BOTH ABUTMENTS.
BEG. ABUT. (WEST) EXISTING TYPE A-1 ARMORED JOINT SYSTEM
END ABUT. (EAST) EXISTING TYPE A-5 ARMORED JONIT SYSTEM

BIN 1093520 -

BEG. ABUTMENT (WEST ABUT.) - EXISTING ARMORED DECK ANGLE, TO REMAIN. PLACE SILICONE SEALER MATERIAL.

END ABUTMENT (EAST ABUT.) - EXISTING TYPE A-5 ARMORED JOINT SYSTEM WITH COMPRESSION SEAL AND ARMORED DECK ANGLE TO REMAIN. REPLACE COMPRESSION SEAL AND PLACE SILICONE SEALER MATERIAL.

BIN 1093540 -

BEG. ABUTMENT (SOUTH ABUT.) - EXISTING TYPE A-5 ARMORED JOINT SYSTEM WITH COMPRESSION SEAL AND ARMORED DECK ANGLE TO REMAIN. REPLACE COMPRESSION SEAL AND PLACE SILICONE SEALER MATERIAL.

END ABUTMENT (NORTH ABUT.) - EXISTING ARMORED DECK ANGLE, TO REMAIN. PLACE SILICONE SEALER MATERIAL.

TIMBER BARRIER:

BIN 1072791 SB - SOUTH FASCIA (LEFT SIDE) PARAPET HAS A TIMBER NOISE BARRIER ATTACHED TO THE BACK SIDE OF THE PARAPET. THIS TIMBER NOISE BARRIER TO REMAIN IT MAY BE NECESSARY TO TEMPORARILY REMOVE THE SUPPORT BRACKETS TO FACILITATE INSTALLATION OF THE PROPOSED BRIDGE JOINT SEAL.

ANY ADDITIONAL SUPPORT TO THE TIMBER NOISE BARRIER DEEMED NECESSARY BY THE ENGINEER, DURING THIS REMOVAL OF THE SUPPORT BRACKETS SHALL BE INCLUDED IN THE PRICE BID FOR ITEM 16567.640001M.

LIST OF ITEMS USED:

ITEM 502.92M - SEALING TRANSVERSE JOINTS (M)
ITEM 16567.640001M - REPLACE COMPRESSION SEAL FOR EXISTING BRIDGE JOINT (M)

ALL DIMENSIONS ARE IN mm UNLESS OTHERWISE NOTED

AS BUILT REVISIONS

SIGNATURE | DATE

I-690 EB RAMP TO I-481 NB & I-481 OVER THOMPSON RD
WN LINE OVER I-481 SB

BRIDGE JOINT DETAILS

STATE OF NEW YORK
DEPARTMENT OF TRANSPORTATION

FILENAME	REGION	DATE	DRAWING NO.
305613AJJA1	3	10/02	J0-47

ESTIMATED BY ____ DRAFTED BY ____ CHECKED BY ____
DESIGN SUPERVISOR ____ JOB MANAGER ____ DESIGNED BY ____ CHECKED BY ____

FED ROAD REG. NO.	STATE	CONTRACT NO.	SHEET NO.	TOTAL SHEETS
1	N.Y.	D259214	412	432

BRIDGE REHABILITATION PROJECT (ELEMENT SPECIFIC)
VARIOUS BRIDGES ON INTERSTATE 481
TOWNS OF DEWITT AND CICERO
ONONDAGA COUNTY
P.I.N. 305613 B.I.N. 1093550

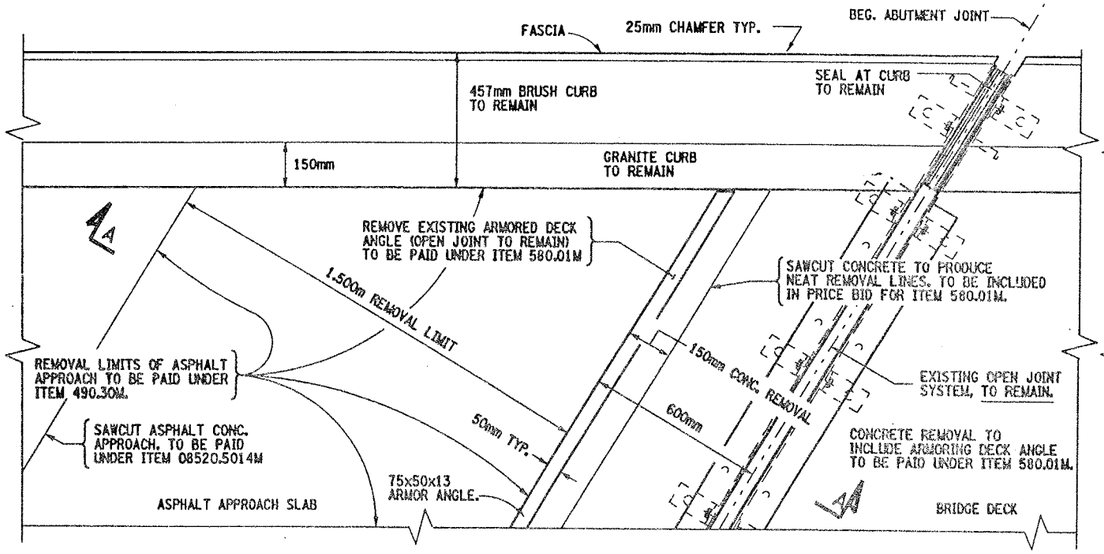

EXISTING BEG. ABUTMENT JOINT PLAN VIEW

BIN 1093550 - SOUTH ABUT.

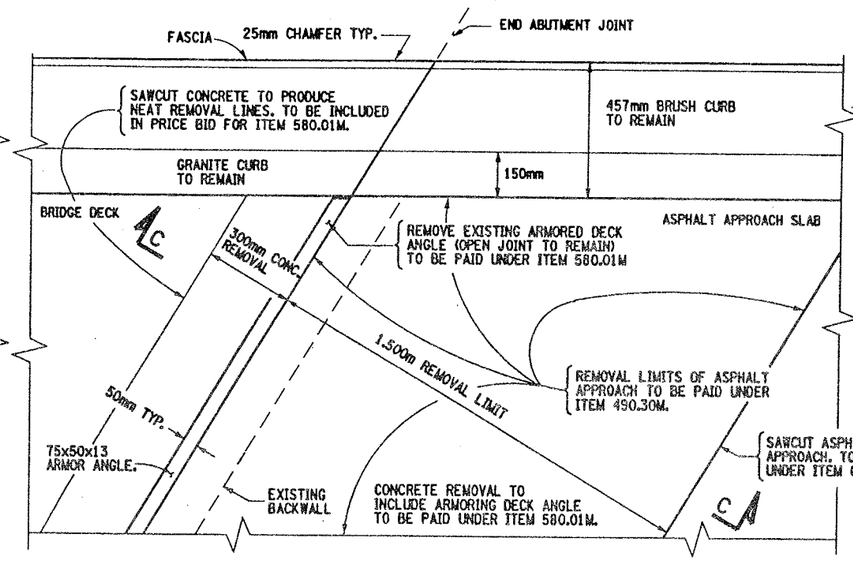

EXISTING END ABUTMENT JOINT PLAN VIEW

BIN 1093550 - NORTH ABUT.

NOTES:

1. REMOVAL OF ARMORING DECK ANGLE SHALL BE FROM CURB TO CURB.
2. FOR SECTION VIEWS SEE DWG. NO. JD-49.
3. BOTH ABUTMENTS HAVE 51°-00'-00" SKEW. ORIGINAL CONTRACT NUMBER FISH 70-7.
4. END ABUTMENT A PORTION OF THE ARMORING DECK ANGLE HAS BEEN REMOVED BY STATE MAINT. FORCES. WHERE THE DECK ANGLE HAS BEEN REMOVED ELASTOMERIC CONCRETE HAS BEEN PLACED IN THE HEADER, THIS MAY INCREASE THE REMOVAL DIFFICULTY. REMOVAL COSTS TO BE INCLUDED IN THE PRICE BID FOR ITEM 580.01M.
5. LEFT SIDE OF DECK SHOWN, RIGHT SIDE IDENTICAL.
6. SAW CUTTING OF CONCRETE SHALL BE INCLUDED IN PRICE BID FOR ITEM 580.01M.
7. REFER TO DWG. NO. JT-3, FOR ADDITIONAL DETAILS.

WORK TO BE DONE:

BEGINNING ABUTMENT (SOUTH ABUT.) - REMOVE ARMORING DECK ANGLE, REPAIR THE CONCRETE WHERE THE ANGLE WAS REMOVED AND REPAIR ASPHALT APPROACH (OPEN JOINT TO REMAIN). ALSO CLEAN THE EXISTING DRAINAGE SYSTEM, SEE CLEAN DRAINAGE SYSTEM NOTE & DETAILS ON DWG. NO. JD-49.

END ABUTMENT (NORTH ABUT.) - REMOVE ARMORING DECK ANGLE, REPAIR THE CONCRETE WHERE THE ANGLE WAS REMOVED AND REPAIR ASPHALT APPROACH.

ITEMS USED:

ITEM 490.30M	- MISC. COLD MILLING OF BIT. CONC. (SM)
ITEM 08520.5014M	- SAWCUTTING BIT. CONC. (M)
ITEM 555.09M	- STRUCT. CONCRETE, CLASS "HP" (CM)
ITEM 556.0202M	- EPOXY-COATED BAR REINFORCEMENT FOR STRUCT. (Kg)
ITEM 580.01M	- REMOVAL OF STRUCT. CONCRETE (CM)

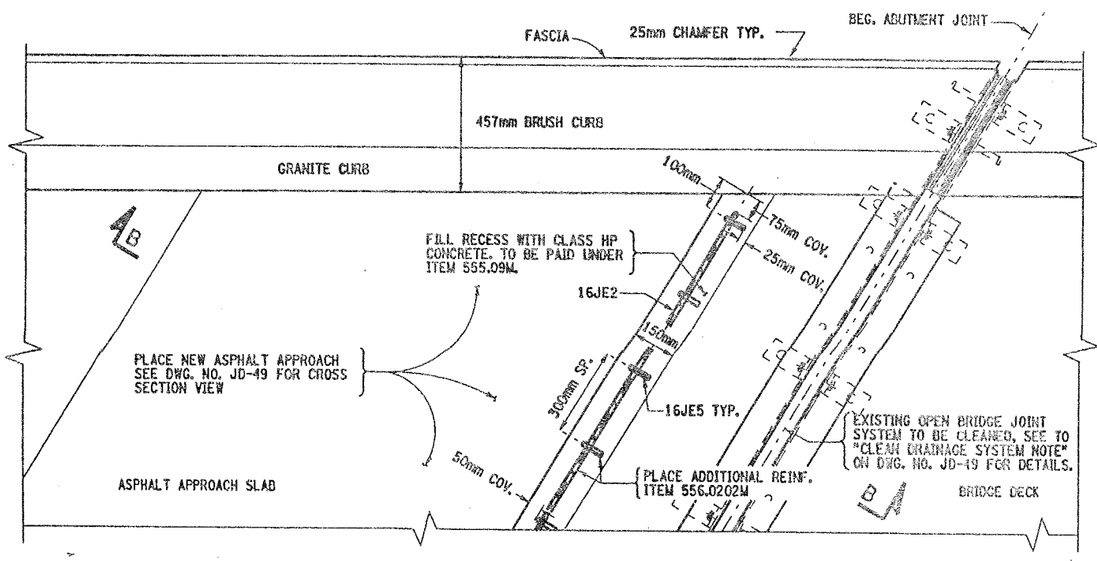

PROPOSED BEG. ABUTMENT JOINT PLAN VIEW

BIN 1093550 - SOUTH ABUT.

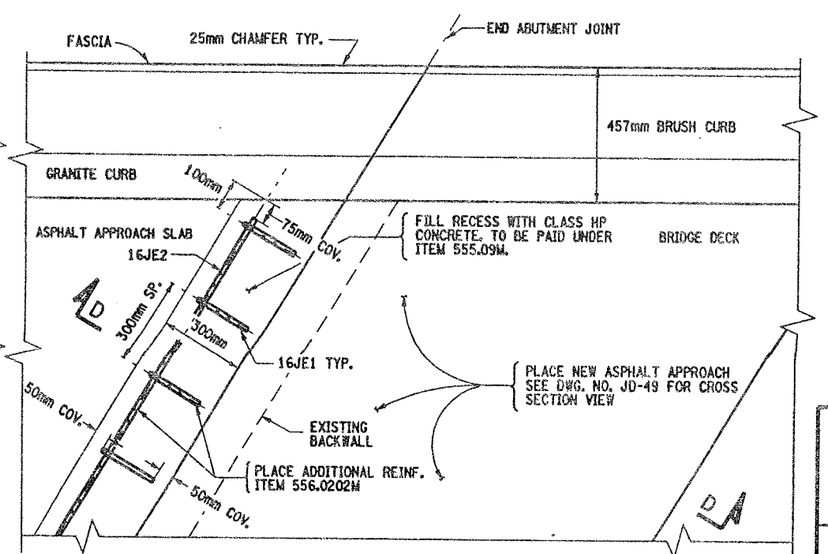

PROPOSED END ABUTMENT JOINT PLAN VIEW

BIN 1093550 - NORTH ABUT.

ALL DIMENSIONS ARE IN mm UNLESS OTHERWISE NOTED

AS BUILT REVISIONS

SIGNATURE DATE

INTERSTATE 481 OVER W.B. CONNECTOR

BRIDGE JOINT DETAILS

STATE OF NEW YORK
DEPARTMENT OF TRANSPORTATION

FILENAME	REGION	DATE	DRAWING NO.
305613AJ.JAI	3	10/02	JD-48

DESIGN SUPERVISOR ____ JOB MANAGER ____ DESIGNED BY ____ CHECKED BY ____ ESTIMATED BY ____ DRAFTED BY ____ CHECKED BY ____

Watts
Architects
&Engineers

BIN 1072792

I-81 (Former I-481) NB over Thompson Road

BIN 1072792
Location: I-481 NB over Thompson Road

NYSDOT D031085 PIN 3501.60 - I-81 Viaduct Replacement or New Urban Arterial
City of Syracuse, Onondaga County
Bridge Asbestos Assessment Results

No asbestos containing materials have been identified on this bridge.

The following summarizes the results of the most recent asbestos survey and record plan review.

Watts Inspection Findings (December 2013)
A bridge inspection was completed on 12/9/2013 and the following suspect ACMs were identified and sampled:

- Grey masonry paint
- Bearing pad
- Grey caulk on fence at top of sidewall

The sampled materials were not positive for asbestos, per laboratory analytical results.

Review of Historic Plans and Previous Asbestos Survey Information

- Record plans (D250416, D259214) were reviewed in support of the field survey. Type D waterstop was identified, however, NYSDOT no longer considers this a suspect material. As a result, there were no suspect ACMs identified.
- A previous asbestos survey competed by LaBella in 2001 was reviewed in support of this project. No asbestos containing materials were identified.

No additional suspect ACM sampling has been identified for BIN 1072792.

Watts Architecture & Engineering

BRIDGE ASBESTOS FIELD INSPECTION FORM

BIN Number/Location: BIN 1072792-481NB over Thompson **Inspection Date:** 12-9-13 Part Top / Part Bel

Project Name: : I-81 Viaduct Replacement or New Urban Arterial **PIN Number:** PIN: 3501.60, D031085

Inspector(s): S. Matthews **Watts Project No:** 13092

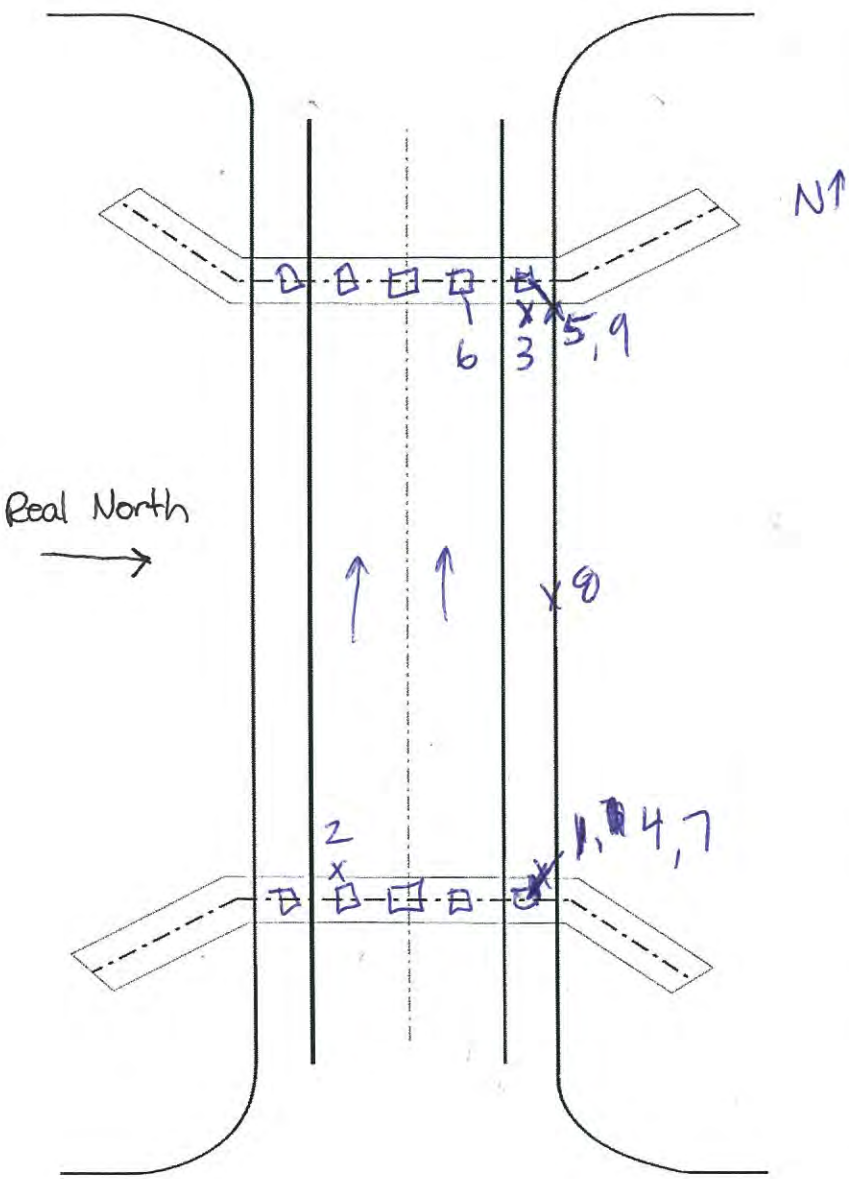

SAMPLE LOCATION PLAN VIEW - N.T.S.

Field Inspection Checklist Item	Investigated	Present	Sampled	
Girder Paint NA	☒	☐	☐	
Truss Paint NA	☒	☐	☐	
Abutment Coating Paint	☐	☐	☒	1-3
Abutment Caulk NA	☒	☐	☐	
Abut. Exp. Jt. Filler NA	☒	☐	☐	
Headwall Sheet Packing NA	☒	☐	☐	
Bearing Pad	☐	☐	☒	4-6
Transite Pipe NA	☒	☐	☐	
Pipe Coating/Wtr. Proof NA	☒	☐	☐	
Scupper Wtr. Proof NA	☒	☐	☐	
Dum Dum Paint NA	☒	☐	☐	
Deck Caulk	☐	☐	☒	7-9
Deck Exp. Jt. Filler NA	☒	☐	☐	
Approach Sheet Packing NA	☒	☐	☐	
Railing Paint NA	☒	☐	☐	
Railing Caulk NA	☒	☐	☐	
Sidewalk Caulk NA	☒	☐	☐	
Lighting Pole Caulk NA	☒	☐	☐	
Masonry Castings NA	☒	☐	☐	
Miscellaneous Tar NA	☒	☐	☐	
Utilities NA	☒	☐	☐	
Other	☐	☐	☐	
Other	☐	☐	☐	
Other	☐	☐	☐	
Other	☐	☐	☐	
Other	☐	☐	☐	

Notes:
- No paint on steel under deck
- Caulk on top sidewall at wood wall.

No sheet packing

EMSL Analytical, Inc.
490 Rowley Road, Depew, NY 14043
Phone/Fax: (716) 651-0030 / (716) 651-0394
http://www.EMSL.com buffalolab@emsl.com

EMSL Order:	141400420
CustomerID:	WATT50A
CustomerPO:	
ProjectID:	

Attn: **Scott Matthews**
Watts Architecture & Engineering
2610 Salina Street
Syracuse, NY 13205

Phone:	(315) 443-8611
Fax:	(315) 443-8605
Received:	02/04/14 10:10 AM
Analysis Date:	2/9/2014
Collected:	12/9/2013

Project: **13092 - 181 Viaduct Replacement or New Urban Arterial Bin 1072792 - 481 NB Over Thompson**

Test Report:Asbestos Analysis of Bulk Material

Test	Analyzed Date	Color	Non Asbestos Fibrous	Non Asbestos Non-Fibrous	Asbestos
Sample ID 1072792-1 *141400420-0001*		**Description**	off white/grey masonry paint		
		Homogeneity	Heterogeneous		
PLM NYS 198.1 Friable					**Not Analyzed**
PLM NYS 198.6 VCM					**Not Analyzed**
PLM NYS 198.6 NOB	2/7/2014	Gray			**Inconclusive: None Detected**
TEM NYS 198.4 NOB	2/9/2014	Gray			**None Detected**
Sample ID 1072792-2 *141400420-0002*		**Description**	off white/grey masonry paint		
		Homogeneity	Heterogeneous		
PLM NYS 198.1 Friable					**Not Analyzed**
PLM NYS 198.6 VCM					**Not Analyzed**
PLM NYS 198.6 NOB	2/7/2014	Various			**Inconclusive: None Detected**
TEM NYS 198.4 NOB	2/9/2014	Various			**None Detected**
Sample ID 1072792-3 *141400420-0003*		**Description**	off white/grey masonry paint		
		Homogeneity	Homogeneous		
PLM NYS 198.1 Friable					**Not Analyzed**
PLM NYS 198.6 VCM					**Not Analyzed**
PLM NYS 198.6 NOB	2/7/2014	Gray			**Inconclusive: None Detected**
TEM NYS 198.4 NOB	2/9/2014	Gray			**None Detected**
Sample ID 1072792-4 *141400420-0004*		**Description**	black bearing pad		
		Homogeneity	Homogeneous		
PLM NYS 198.1 Friable					**Not Analyzed**
PLM NYS 198.6 VCM					**Not Analyzed**
PLM NYS 198.6 NOB	2/7/2014	Black			**Inconclusive: None Detected**
TEM NYS 198.4 NOB	2/9/2014	Black			**None Detected**
Sample ID 1072792-5 *141400420-0005*		**Description**	black bearing pad		
		Homogeneity	Homogeneous		
PLM NYS 198.1 Friable					**Not Analyzed**
PLM NYS 198.6 VCM					**Not Analyzed**
PLM NYS 198.6 NOB	2/7/2014	Black			**Inconclusive: None Detected**
TEM NYS 198.4 NOB	2/9/2014	Black			**None Detected**

Initial Report From 02/09/2014 18:31:29

EMSL Analytical, Inc.
490 Rowley Road, Depew, NY 14043
Phone/Fax: (716) 651-0030 / (716) 651-0394
http://www.EMSL.com buffalolab@emsl.com

EMSL Order:	141400420
CustomerID:	WATT50A
CustomerPO:	
ProjectID:	

Test Report:Asbestos Analysis of Bulk Material

Test		Color	Fibrous	Non Asbestos Non-Fibrous	Asbestos
Sample ID	1072792-6	**Description**	black bearing pad		
	141400420-0006	**Homogeneity**	Homogeneous		
PLM NYS 198.1 Friable					**Not Analyzed**
PLM NYS 198.6 VCM					**Not Analyzed**
PLM NYS 198.6 NOB	2/7/2014	Black			**Inconclusive: None Detected**
TEM NYS 198.4 NOB	2/9/2014	Black			**None Detected**
Sample ID	1072792-7	**Description**	grey caulk on fence at top of side wall		
	141400420-0007	**Homogeneity**	Homogeneous		
PLM NYS 198.1 Friable					**Not Analyzed**
PLM NYS 198.6 VCM					**Not Analyzed**
PLM NYS 198.6 NOB	2/7/2014	Gray			**Inconclusive: None Detected**
TEM NYS 198.4 NOB	2/9/2014	Gray			**None Detected**
Sample ID	1072792-8	**Description**	grey caulk on fence at top of side wall		
	141400420-0008	**Homogeneity**	Homogeneous		
PLM NYS 198.1 Friable					**Not Analyzed**
PLM NYS 198.6 VCM					**Not Analyzed**
PLM NYS 198.6 NOB	2/7/2014	Gray			**Inconclusive: None Detected**
TEM NYS 198.4 NOB	2/9/2014	Gray			**None Detected**
Sample ID	1072792-9	**Description**	grey caulk on fence at top of side wall		
	141400420-0009	**Homogeneity**	Homogeneous		
PLM NYS 198.1 Friable					**Not Analyzed**
PLM NYS 198.6 VCM					**Not Analyzed**
PLM NYS 198.6 NOB	2/7/2014	Gray			**Inconclusive: None Detected**
TEM NYS 198.4 NOB	2/9/2014	Gray			**None Detected**

Analyst(s)
Rachel Giese
Rhonda McGee

Rhonda McGee

Rhonda McGee, Laboratory Manager
or other approved signatory

NOB = Non Friable Organically Bound N/A = Not Applicable VCM = Vermiculite Containing Material

-In New York State, TEM is currently the only method that can be used to determine if NOB materials can be considered or treated as non-asbestos containing.
All samples examined for the presence of vermiculite when analyzed via NYS 198.1.
-NYS Guidelines for Vermiculite containing samples are available at http://www.wadsworth.org/labcert/elapcert/forms/VermiculiteInterimGuidance_Rev070913.pdf
EMSL maintains liability limited to cost of analysis. This report relates only to the samples reported above and may not be reproduced, except in full, without written approval by EMSL. EMSL bears no responsibility for sample collection activities or analytical method limitations. Interpretation and use of test results are the responsibility of the client. Samples were received in good condition unless otherwise noted.
This report must not be used by the client to claim product certification, approval, or endorsement by NVLAP, NIST, or any agency of the federal government. This report may contain data that is not covered by the NVLAP accreditation.

Samples analyzed by EMSL Analytical, Inc. Depew, NY NYS ELAP 11606

Initial Report From 02/09/2014 18:31:29

141400420

WATTS ARCHITECTURE & ENGINEERING, P.C.
ASBESTOS BULK SAMPLE CHAIN-OF-CUSTODY

Page: 1 of 1
Date: 12-9-13

Client: C&S / DOT
Project: I81 Viaduct Replacement or New Urban Arterial
Building / Location: BIN 1072792 (I481 NB over Thompson)
Contact: Scott Matthews at (315) 443-8611
Email Preliminary Results to: smatthews@watts-ae.com
Mail Invoice to: Accounts Payable, Watts Architecture & Engineering, P.C., 95 Perry Street, Buffalo, NY 14203

Watts Project No.: 13092
Turnaround Requested: 3 Hr. ___ 48 Hr. ___
Analysis Requested: 6 Hr. ___ 72 Hr. ___
PLM X TEM X 12 Hr. X ~~5 Day~~ 1/week
24 Hr. ___ 6-10 Day ___ em 2/4/14

Mail Report to: Scott Matthews, Watts Architecture & Engineering, P.C., 2610 S Salina Street, Syracuse, NY 13210

Sample Number	Material Description	Sample Location	Laboratory Results PLM	Laboratory Results TEM
1072792-1	offwhite/grey masonry paint	Masonry block below bearing foot SEC		
2	↓	South abutment wall		
3	↓	North abutment wall		
4	Black bearing pad	SE corner Bearing		
5	↓	NE corner bearing		
6	↓	2nd from NE corner bearing		
7	Grey caulk on fence at top of sidewall	South end of Bridge/Fence		
8	↓	mid point of Bridge/Fence		
9	↓	North end of Bridge/Fence		

RECEIVED FEB 04 2014 BY: 10am Fri 4

Sampled By: Scott Matthews Date: 2-3-14 Received By: Date:
Relinquished By: Scott Matthews to FedEx Date: Received By: Date:
Comments:

C:\Documents and Settings\smatthews\Desktop\BulkForm.xls
12/2/2013

Page 1 Of 1

OrderID: 141400415

Watts
Architects
&Engineers

BIN 1072792 Inspection Photos

I-81 (Former I-481) NB over Thompson Road

Photo 1

Photo 2

Photo 3

Photo 4

Photo 5

Photo 6

D250416

FED. RD. REG. NO.	STATE	FEDERAL AID PROJECT NO.	SHEET NO.	TOTAL SHEETS
	NEW YORK	IR-81-2(154)	278	380

INTERSTATE RTE. 570 EXTENSION (I-481)
NORTHERN BLVD. TO BEAR ROAD INTERCHANGE
ONONDAGA COUNTY

CAPITAL PROJECT IDENTIFICATION NO.

1072792
NB

TEAM LEADER B Opalka
DATE 5/87
FIELD VERIFIED ✓
Peter Reichlman
11/17/88

Opalka 12/4/90
P.J.R. 11/92
Opalka 10/25/94
Douglas E. Sullivan 10/16/96
Bruce Opalka 1/14/00
Gary W. Cook 9/19/02
B To 9/1/04
Gary W. Cook 07/12/06
David J. Hearn 7/30/08
Bruce Opalka 7/13/10
Peter Reichlman 6/8/12

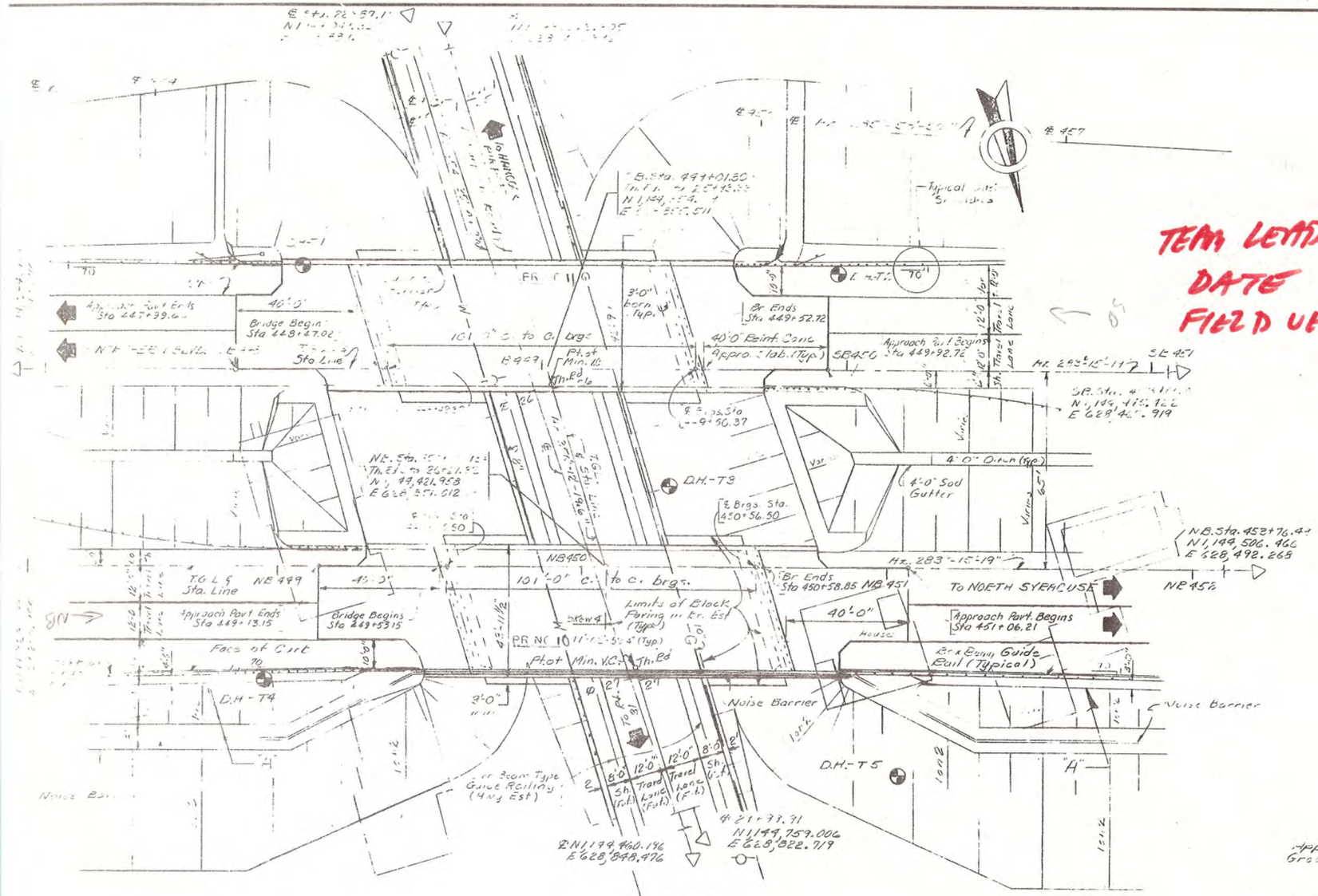

PLAN
SCALE 1" = 20'-0"

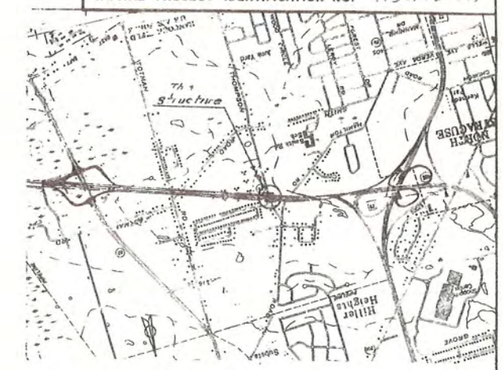

LOCATION MAP
SCALE 1" = 2000'
CLEES QUADRANGLE

BIN 1072791 (Br. 11) & BIN 1072792 (Br. 10)	
INVENTORY RATING	OPERATING RATING
HS 23(42T)(W.S.)	HS 47(85T)(W.S.)

The ratings shown are based on the use of the Type 2 Form System - See Dwg. No. 21 of 38.

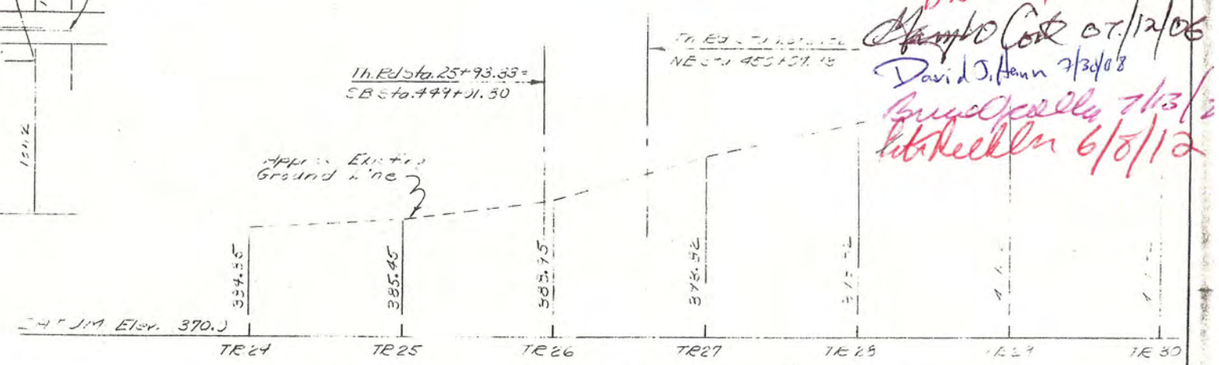

EXISTING THOMPSON RD. PROFILE
SCALE HORIZ. 1" = 20'

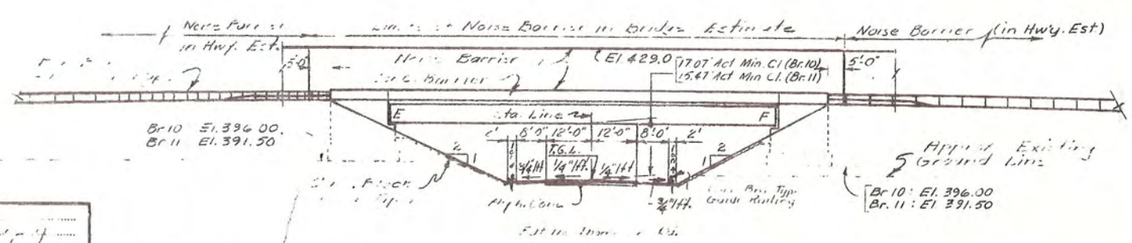

ELEVATION "AA"
SCALE 1" = 20'-0"

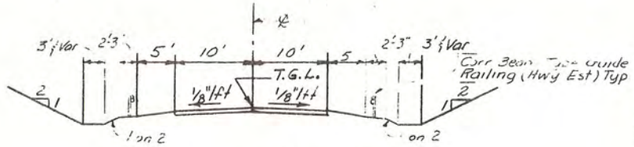

EXISTING THOMPSON RD.
SCALE 1" = 10'-0"

Indicates Existing

STATE OF NEW YORK
DEPARTMENT OF TRANSPORTATION
STRUCTURES DESIGN & CONSTRUCTION DIVISION

Bridges 10 & 11 over Thompson Rd.

PLAN, ELEVATION, PROFILE AND SECTION

DATE MADE
PROJECT ENGINEER
CHARGE OF
DESIGNED BY
DESIGN CHECKED BY
DETAILED BY
DETAIL CHECKED BY

D250416

FED. RD. REG. NO.	STATE	FEDERAL AID PROJECT NO.	SHEET NO.	TOTAL SHEETS
	NEW YORK	I-481-2(154) IR-81-3(154)	290	380

INTERSTATE RTE. 570 EXTENSION (I-481)
NORTHERN BLVD. TO BEAR ROAD INTERCHANGE
ONONDAGA COUNTY

CAPITAL PROJECT IDENTIFICATION NO. 3107.00(01)

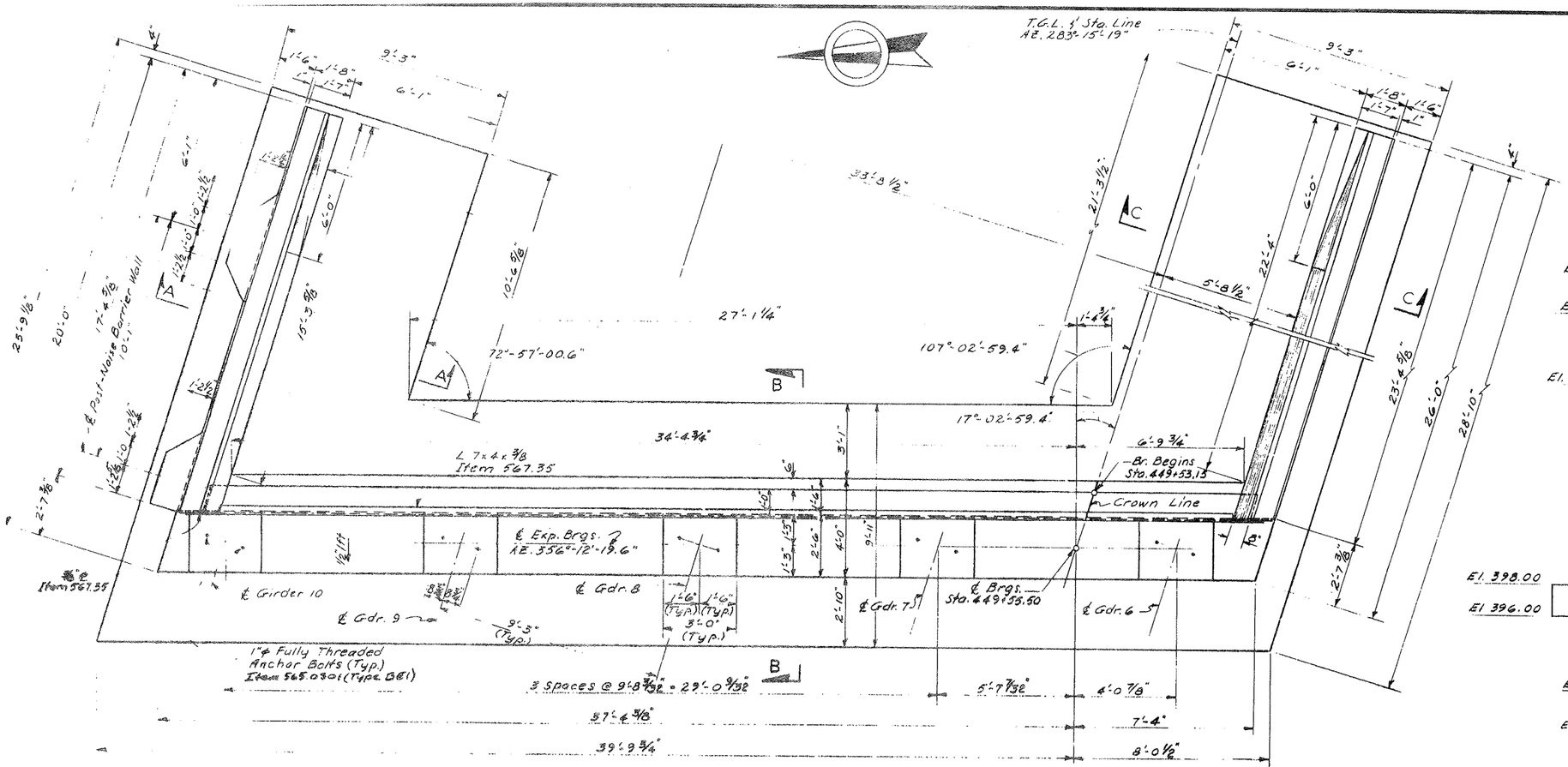

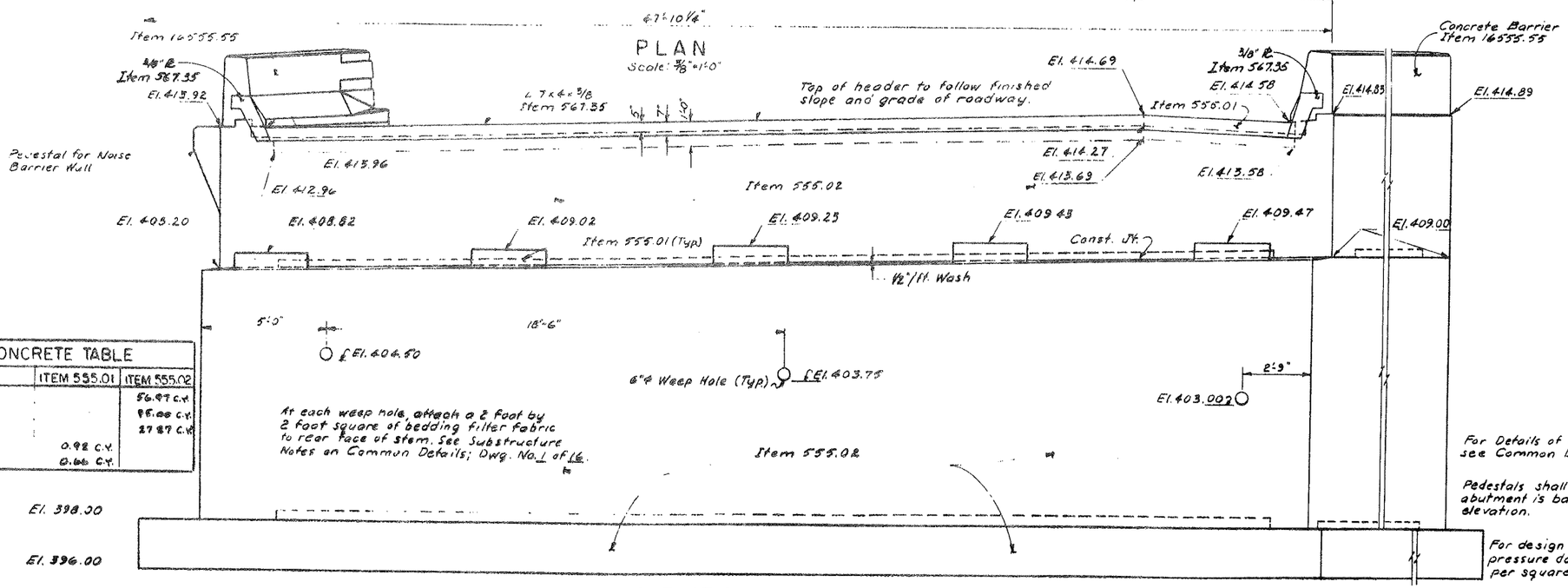

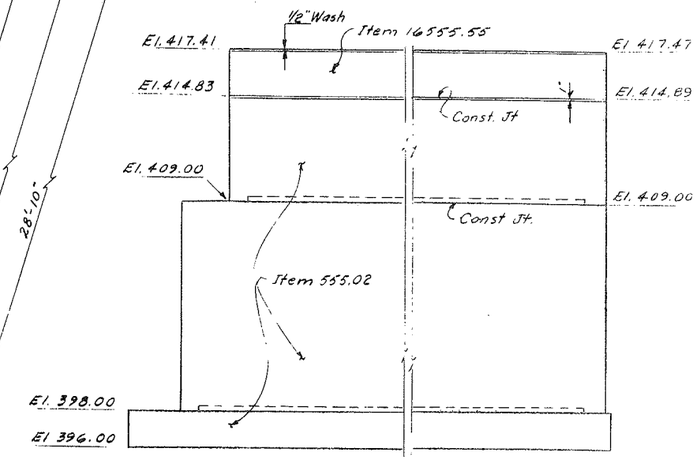

S E WINGWALL
Scale: 1/4"=1'-0"

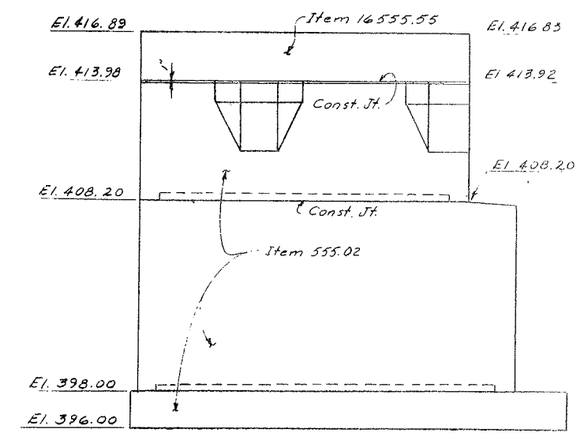

N E WINGWALL
Scale: 1/4"=1'-0"

CONCRETE TABLE		
POUR	ITEM 555.01	ITEM 555.02
Footing		56.97 C.Y.
Lower Stem		88.00 C.Y.
Upper Stem		27.87 C.Y.
Pedestals	0.92 C.Y.	
Header	0.66 C.Y.	

For Sections A-A thru C-C, see Dwg. No. 15 of 38

For Keyway Details, see Dwg. No. 9 of 38

For Conc. Barrier Details see Dwg No. 14 of 38

For details of Armored Joint System, Item 56735, see Dwg. No. 19 of 38.

For Details of Noise Barrier Wall, see Common Details, Dwg. No. 16 of 16.

Pedestals shall not be poured until the abutment is backfilled to subgrade elevation.

For design purposes, the foundation pressure does not exceed 2 1/2 Tons per square foot.

STATE OF NEW YORK
DEPARTMENT OF TRANSPORTATION
STRUCTURES DESIGN AND CONSTRUCTION DIVISION

Bridge 10 over Thompson Rd.

EAST ABUTMENT - BRIDGE 10

PROJ. ENG. E.J. Barry | DATE MAR.
SQUAD | DRAWING NO. 13 OF 38

FED. RD. REG. NO.	STATE	FEDERAL AID PROJECT NO.
	NEW YORK	BRIDGE NO. 10-31 & 31A

INTERSTATE RTE. 190 EXTENSION
NORTHERN BLVD. TO BEAM ROAD
ONONDAGA COUNTY

CAPITAL PROJECT IDENTIFICATION NO. 31677.0

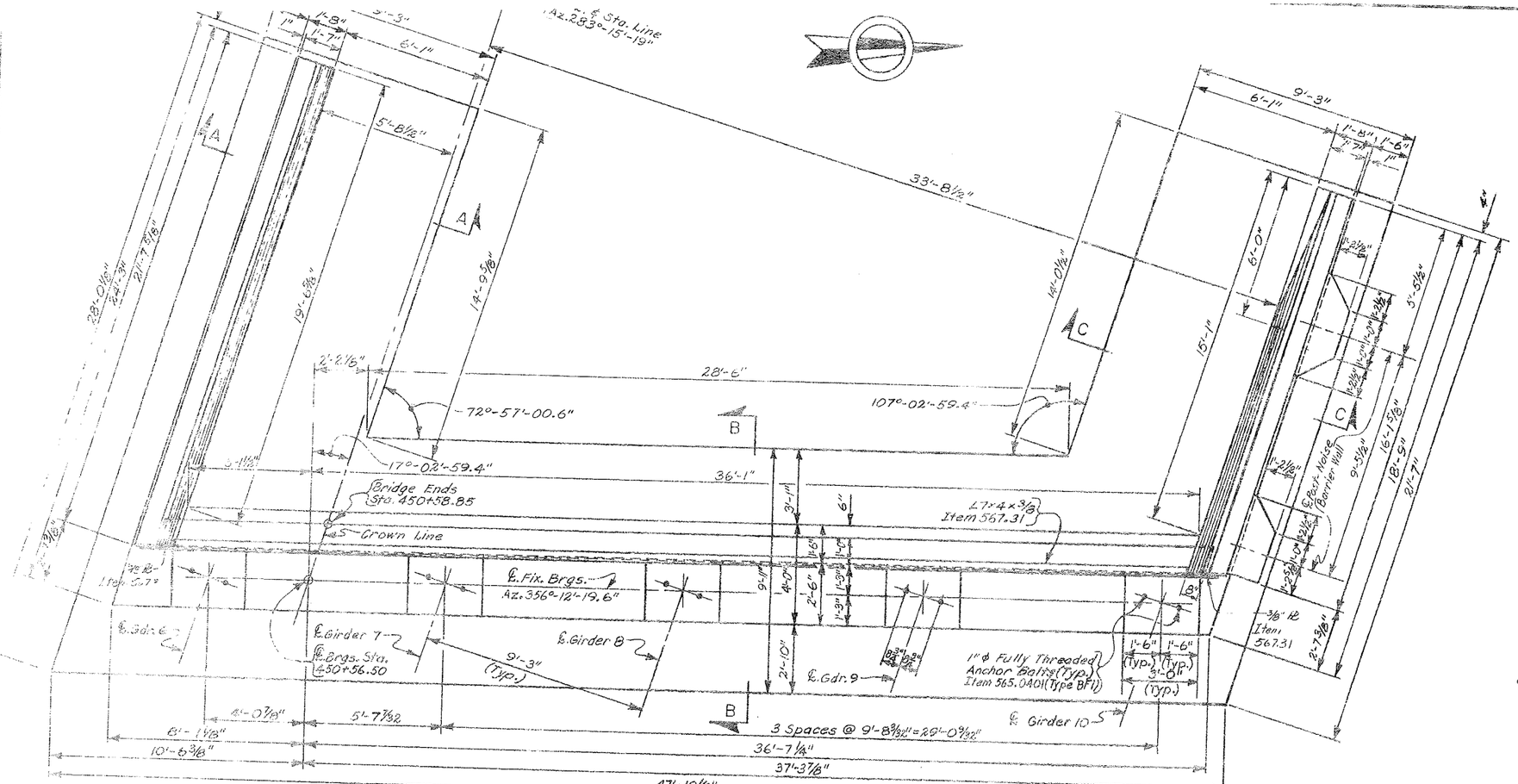

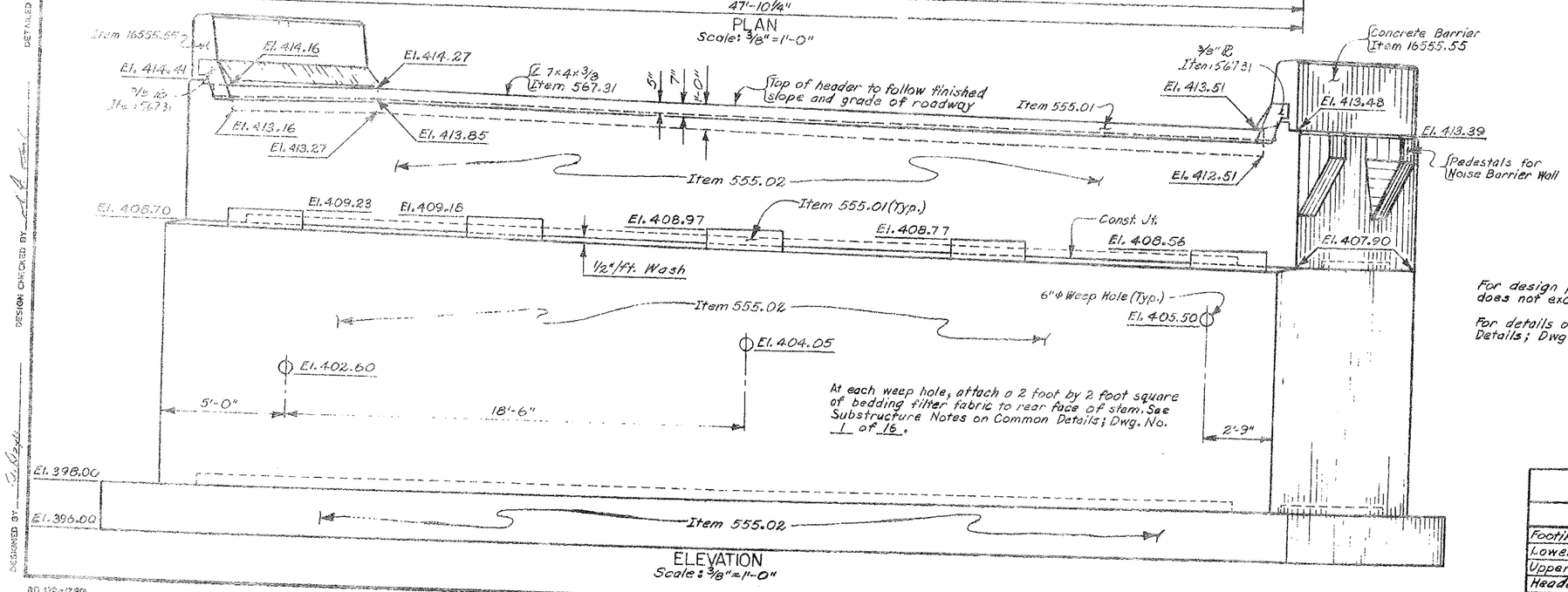

At each weep hole, attach a 2 foot by 2 foot square of bedding filter fabric to rear face of stem. See Substructure Notes on Common Details; Dwg. No. 1 of 16.

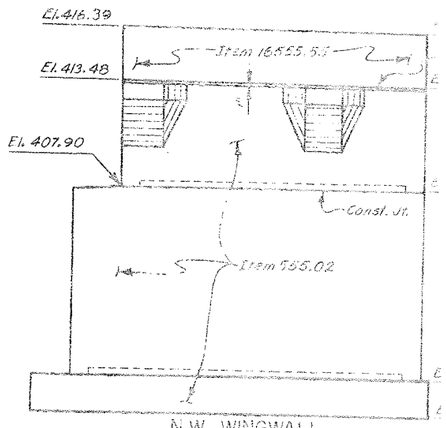

N.W. WINGWALL
Scale: ¼" = 1'-0"

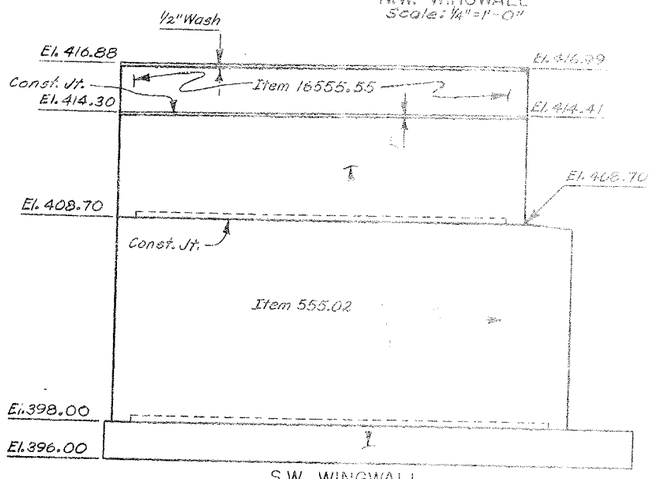

S.W. WINGWALL
Scale: ¼" = 1'-0"

For design purposes, the foundation pressure does not exceed 2½ Tons per square foot.

For details of Noise Barrier Wall, see Common Details; Dwg. No. 16 of 16.

Pedestals shall not be poured until the ft. is backfilled to subgrade elevation.

For Sections A-A thru C-C, see Dwg. No.

For Keyway Details, see Dwg. No. 9 of 38.

For Conc. Barrier Details, see Dwg. No. 17.

For details of Armored Joint System, Item, see Dwg. No. 12 of 38.

CONCRETE TABLE

POUR	ITEM 555.01	ITEM 555.02
Footing	—	54.69 C.Y.
Lower Stem	—	90.38 C.Y.
Upper Stem	—	34.58 C.Y.
Header	0.66 C.Y.	—
Pedestals	0.97 C.Y.	—

STATE OF NEW YORK
DEPARTMENT OF TRANSPORTATION
STRUCTURES DESIGN AND CONSTRUCTION

Bridge 10 over Thompson Rd.

WEST ABUTMENT - BRIDGE 10

PROJ. ENG. — DATE MADE
SQUAD — DRAWING NO. 16

DESIGNED BY
DESIGN CHECKED BY
DETAILED BY
DETAIL CHECKED BY

BD 178-1 (7/80)

FED. RD. REG. NO.	STATE	FEDERAL AID PROJECT NO.	SHEET NO.
	NEW YORK	IR-81-2(154)	2

INTERSTATE RTE. 690 EXTENSION (I-481)
NORTHERN BLVD. TO NEAR BEAR INTERCHANGE
ONONDAGA COUNTY

CAPITAL PROJECT IDENTIFICATION NO. 3107.00

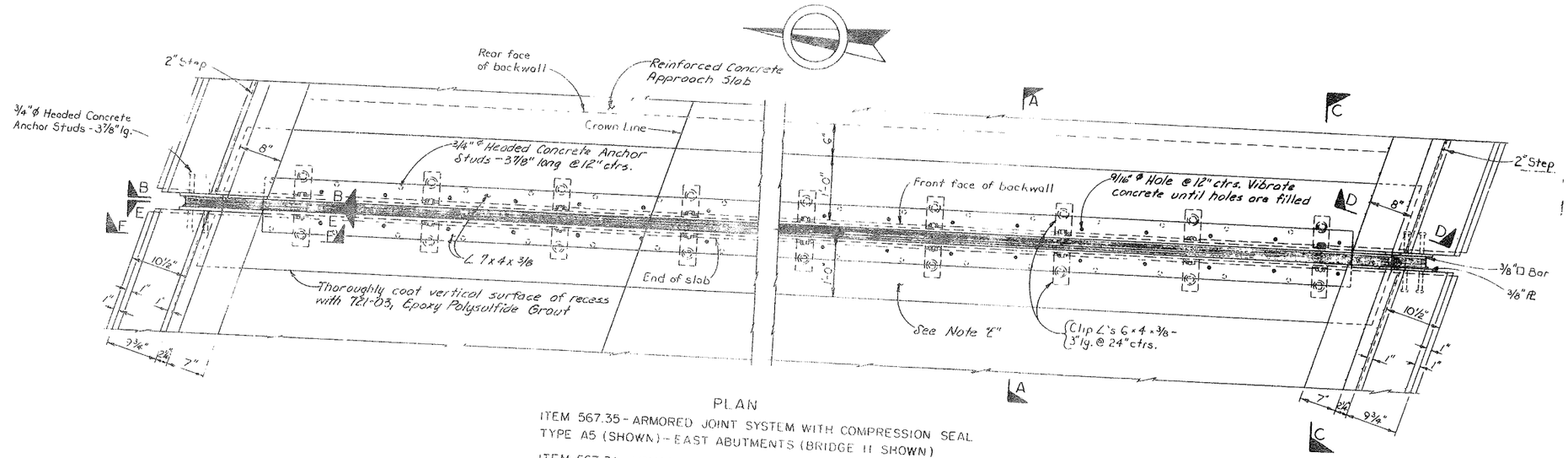

PLAN

ITEM 567.35 - ARMORED JOINT SYSTEM WITH COMPRESSION SEAL
TYPE A5 (SHOWN) - EAST ABUTMENTS (BRIDGE 11 SHOWN)

ITEM 567.31 - ARMORED JOINT SYSTEM WITH COMPRESSION SEAL
TYPE A1 (SIMILAR) - WEST ABUTMENTS
Scale: 1" = 1'-0"

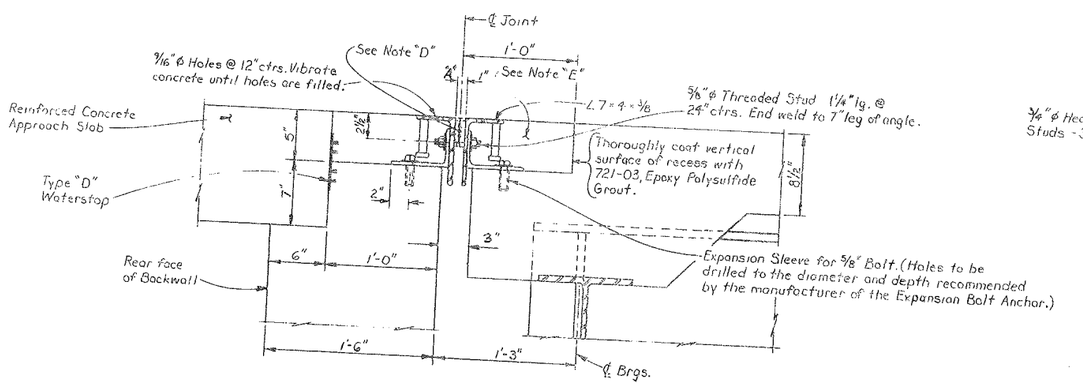

WEST ABUTMENTS

Unless otherwise indicated, notes and details at West and East Abutments are similar.

SECTION A-A
SCALE: 1 1/2" = 1'-0"

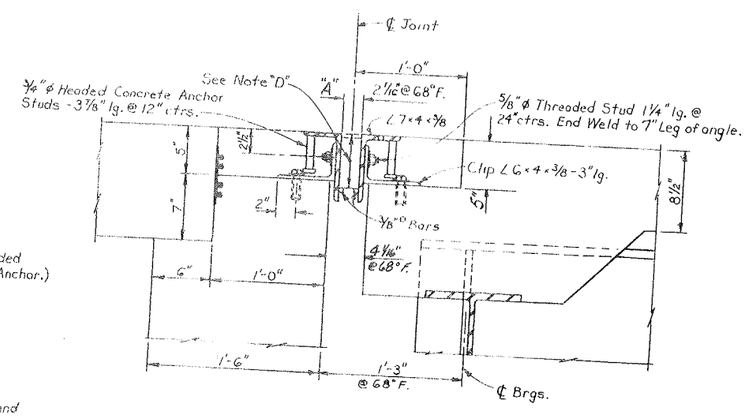

EAST ABUTMENTS

Note

Details and dimensions of Armo System to be used on Bridge 1 identical to those shown on th ing and drawing No. 20 of 38. Armored Joint System is not by the structural slab extens on the North side of Bridge 10.

Note "D"

This depth shall be indicated on the shop dr and shall be such that when the seal is compressed of its normal width, the top of the seal shall be no than 1/4" nor more than 3/4" below the top of roadw

Note "E"

Concrete in recesses on superstructures provid installing the Armored Joint System shall comply w Specifications for Item 15555.04, except that mac finishing will not be required. No additional paymen be made for furnishing and placing this concrete quantity lies within the limits of the area to be p under Item 15555.04.

It is desirable to have the Armored Joint wit Compression Seal assembled in the shop and delivered job site all set for installation in its preformed rece structural slab. In cases where the Armored Joint be assembled in the shop, due to its excessive leng causing shipping problems, the joint shall be sealed the Compression Seal before the structure is opened traffic, and before discontinuing operation when work suspended during the Winter.

The cost of furnishing and placing the Epoxy Polysulfide Grout shall be included in the unit price b for Item 15555.04.

For details of Headed Concrete Anchor Stud and Cutting Seal, see Dwg. No. 20 of 38.

For sections B-B thru F-F, see Dwg. No. 20 of 38.

For details of Clip Angle, see Dwg. No. 20 of 38.

STATE OF NEW YORK
DEPARTMENT OF TRANSPORTATION
STRUCTURES DESIGN AND CONSTRUCTION DIVISION

Bridges 10 & 11 over Thompson Rd.

ARMORED JOINTS AT ABUTMENTS

PROJ. ENG. | DATE MADE
SQUAD | DRAWING NO.

DETAILED BY T.E.R. DETAIL CHECKED BY
DESIGNING CHECKED BY
DESIGNED BY

SD 179a (7/69)

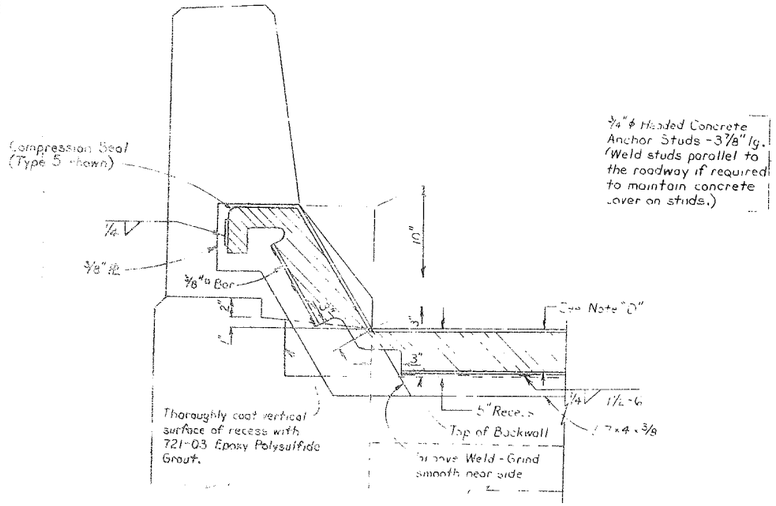

SECTION B-B
SCALE: 1 1/2" = 1'-0"

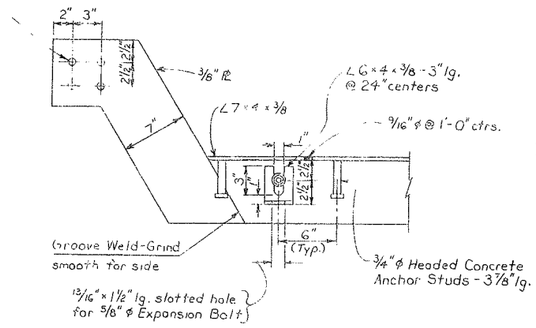

SECTION F-F
STEEL ONLY SHOWN
SCALE: 1 1/2" = 1'-0"

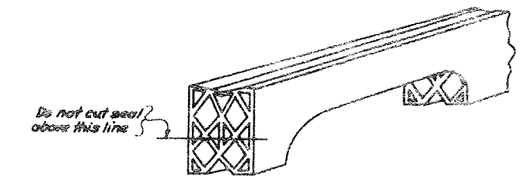

DETAIL FOR CUTTING SEAL
Not to Scale

The seal shall be supplied in one piece for the full length of joint. Splices will not be permitted when the length of this piece is less than 50 feet. For lengths up to 100 feet one shop splice will be permitted. For lengths in excess of 100 feet shop splices may be placed at approximately 50 feet intervals.

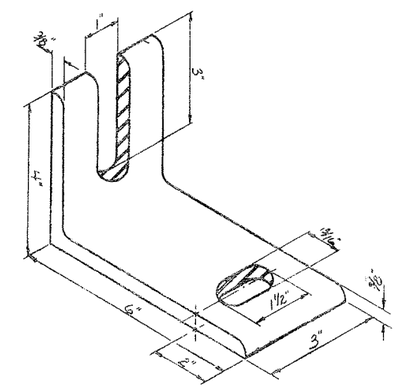

DETAIL OF CLIP ANGLE (A36)
Not to scale

Note:
Dimensions of concrete barrier and joint assembly are similar to Section B-B.

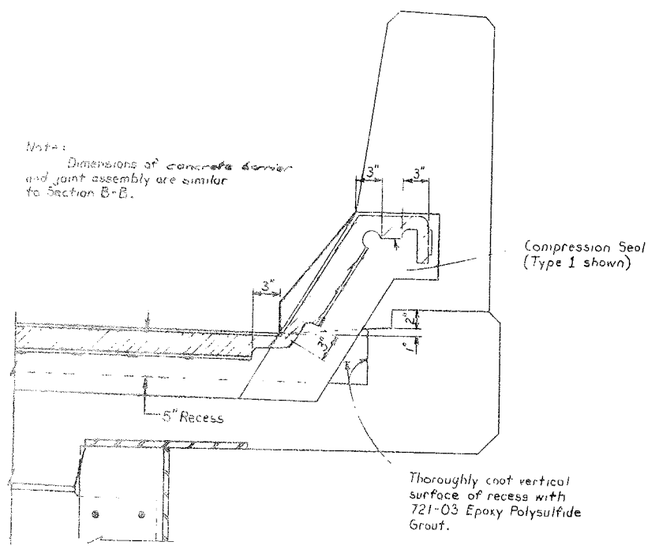

SECTION [illegible]

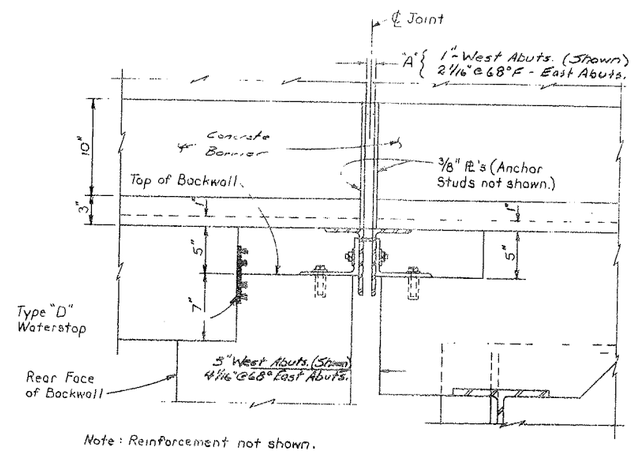

Note: Reinforcement not shown.

SECTION C-C
SCALE: 1 1/2" = 1'-0"

SEALS			ARMORED JOINT SYSTEM	
TYPE	NOMINAL WIDTH	DIMENSION "A"	TYPE	LOCATION
1	1¾"	1"	A1	West Abutment
5	5½"	2 1/16" @ 68°F.	A5	East Abutment

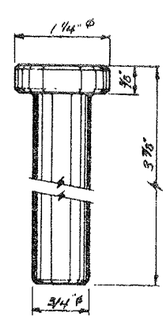

DETAIL OF HEADED CONC. ANCHOR STUD
Not to Scale

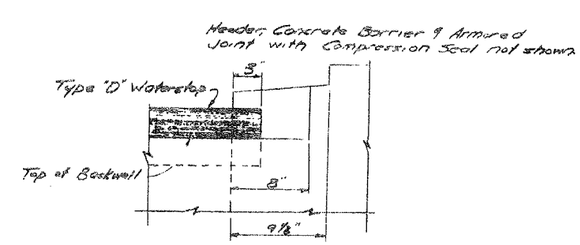

SECTION D-D
Not to scale

For Notes D & E, see
For location of Sec.
See Dwg. No. 19 o.

FED. RD. ADM. NO.	STATE
	NEW YORK

INTERSTATE RTE
NORTHERN BLVD.
CAPITAL PROJECT IDENTIFICATION

STA
DEPARTME
STRUCTURES DESIG

Bridges 10 &

ARMORED JOINTS

PROJ. ENG.

D250416

FED. RD. REG. NO.	STATE	FEDERAL AID PROJECT NO	SHEET NO.	TOTAL SHEETS
	NEW YORK	IR-81-2(154)	298	380

INTERSTATE RTE. 570 EXTENSION (I-481)
NORTHERN BLVD. TO BEAR ROAD INTERCHANGE
ONONDAGA COUNTY

CAPITAL PROJECT IDENTIFICATION NO. 3107.00 (01)

GIRDER TABLE

GIRDER	DECK FORM TYPE**	TOP FLANGE PL A	TOP FLANGE PL B	TOP FLANGE PL C	BOTTOM FLANGE PL D	BOTTOM FLANGE PL E	BOTTOM FLANGE PL F	BOTTOM FLANGE PL G	BOTTOM FLANGE PL H	WEB "W"
1-5	1	16"x1 1/8"	16"x3/4"	16"x3/4"	16"x2"	16"x3/4"	16"x1 1/2"	16"x1 1/2"	16"x3/4"	44"x1/2"
6-9	1	17"x1 1/8"	17"x3/4"	17"x3/4"	17"x2"	17"x3/4"	17"x1 1/2"	17"x1 1/2"	17"x3/4"	44"x1/2"
10	1	17"x1 1/4"	17"x3/4"	17"x3/4"	17"x2"	17"x3/4"	17"x1 1/2"	17"x1/2"	17"x3/4"	44"x9/16"
1-5	2	16"x1 1/8"	16"x3/4"	16"x3/4"	17"x2"	17"x3/4"	17"x1 1/2"	17"x1 1/2"	17"x3/4"	44"x9/16"
6-9	2	17"x1 1/8"	17"x3/4"	17"x3/4"	18"x2"	18"x3/4"	18"x1 1/2"	18"x1 1/2"	18"x3/4"	44"x1/2"
10	2	17"x1 1/4"	17"x3/4"	17"x3/4"	18"x2"	18"x3/4"	18"x1 1/2"	18"x1 1/2"	18"x3/4"	44"x9/16"

ALL TYPE 2

** Type 1 Forms are removable or integral prestressed concrete.
Type 2 Forms are permanent corrugated metal.

* F.P.G.W. = Full Penetration Groove Weld
M.B = Mill to Bear

STUD SHEAR CONNECTOR SPACING-ITEM 556.03

GIRDER	SPACING	TOTAL STUDS
1-5	6'-0" 110 sp. (111 pairs) @ 11" = 100'-10" 6'-0"	1110
6-9	6'-0" 134 sp. (135 pairs) @ 9" = 100'-6" 6'-0"	1080
10	6'-0" 110 sp. (111 pairs) @ 11" = 100'-10" 6'-0"	222

End of Girder

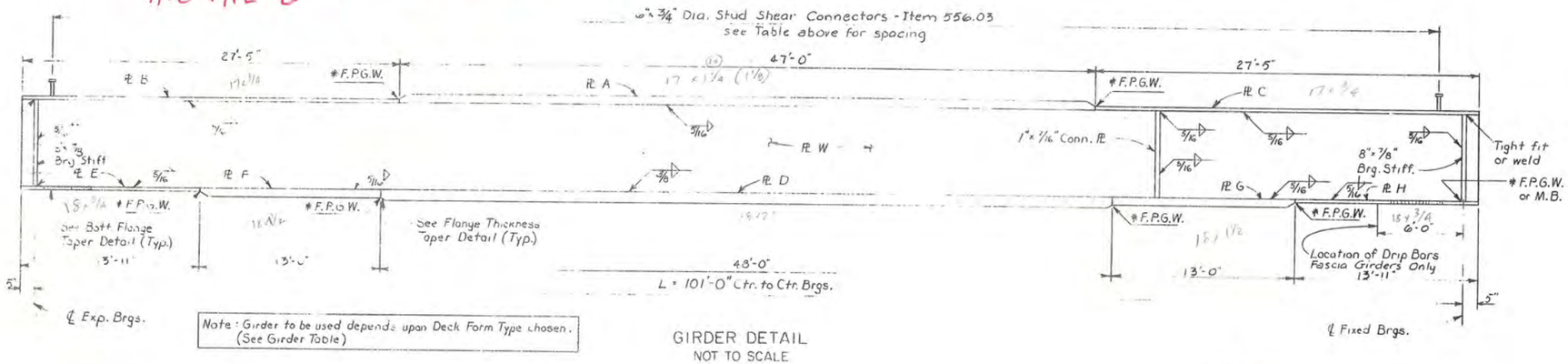

Note: Girder to be used depends upon Deck Form Type chosen. (See Girder Table)

GIRDER DETAIL
NOT TO SCALE

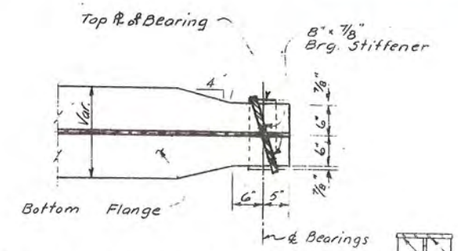

BOTTOM FLANGE TAPER
Not to Scale

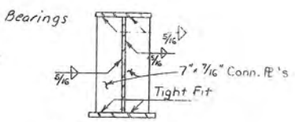

CON'N PL - IN PAIRS

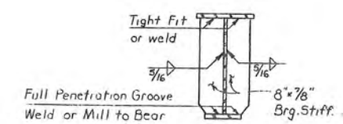

BRG STIFF.

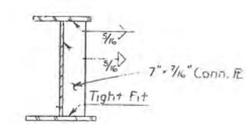

CON'N PL - USED SINGLY

GIRDER SECTIONS
NOT TO SCALE

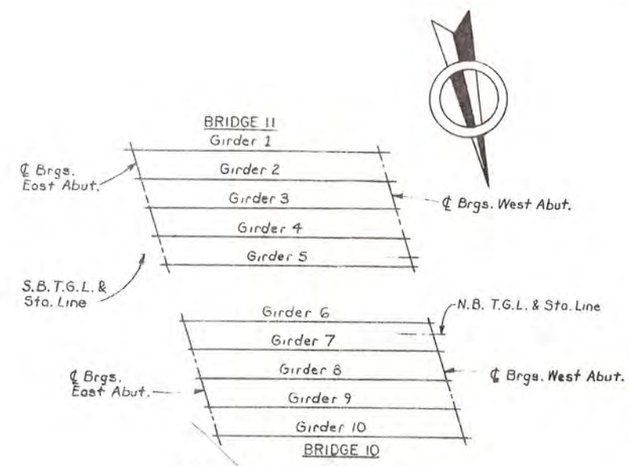

GIRDER LAYOUT
NOT TO SCALE

CAMBER TABLE

		0.1L	0.2L	0.3L	0.4L	0.5L	0.6L	0.7L	0.8L	0.9L
GIRDER 1-5	I VERTICAL CURVE (FT)	.01	.01	.02	.02	.02	.02	.02	.02	.01
	II STEEL D.L. (FT)	.02	.04	.05	.06	.06	.06	.05	.04	.02
	III CONCRETE D.L. (FT.)	.09	.17	.23	.27	.28	.27	.23	.17	.09
	IV SUPERIMPOSED D.L. (FT.)	.02	.03	.04	.05	.05	.05	.04	.03	.02
	TOTAL (FT.)	.14	.25	.34	.40	.41	.40	.34	.26	.14
GIRDER 6-9	I VERTICAL CURVE (FT)	.01	.02	.02	.03	.03	.03	.02	.02	.01
	II STEEL D.L. (FT)	.02	.04	.05	.06	.06	.06	.05	.04	.02
	III CONCRETE D.L. (FT)	.09	.16	.23	.26	.28	.26	.23	.16	.09
	IV SUPERIMPOSED D.L. (FT)	.02	.03	.04	.05	.05	.05	.04	.03	.02
	TOTAL (FT.)	.14	.25	.34	.40	.42	.40	.34	.25	.14
GIRDER 10	I VERTICAL CURVE (FT)	.01	.02	.02	.02	.02	.03	.02	.01	.01
	II STEEL D.L. (FT.)	.02	.04	.05	.06	.06	.06	.05	.04	.02
	III CONCRETE D.L. (FT.)	.08	.16	.21	.25	.26	.25	.21	.16	.08
	IV SUPERIMPOSED D.L. (FT)	.03	.06	.08	.09	.10	.09	.08	.06	.03
	TOTAL (FT.)	.14	.28	.36	.42	.44	.43	.36	.27	.14

Note: Tables of Camber, Design Load & Moment and Shear are based upon use of the girder which would be used with Deck Form Type 2. (See Girder Table above.)

CAMBER NOTES

1. The camber labeled "Vertical Curve" in the table is the camber required to follow the vertical curve.
2. The camber labeled "Steel D.L." in the table is the camber required to offset the deflection due to the dead load weight of the girder as fabricated.
3. The camber labeled "Concrete D.L." in the table is the camber required to offset the deflection due to the dead load weight of the concrete slab.
4. The camber labeled "Superimposed D.L." in the table is the camber required to offset the deflection due to the weight of the curb, sidewalk, railing and future wearing surface.
5. The total camber is the sum of vertical curve, steel dead load, concrete dead load and superimposed dead load. All camber offsets are measured vertically to the top of web from a straight reference line drawn from the intersection of top of web and centerline of bearing at one end of the girder to the corresponding point at the other end of the girder.
6. Positive numbers in the table are above the straight reference line.
7. Negative numbers in the table are below the straight reference line.
8. The camber offsets are tabulated in decimals of a foot.

For Superstructure Notes, see Common Details; Dwg. No. 1 of 16.

All structural steel shall be ASTM A588 steel, unpainted.

For Stud Shear Connector Details, see Common Details Dwg. No. 5 of 16.

For details of Flange Thickness Taper, see Common Details; Dwg. No. 5 of 16.

The ends of girders and bearing stiffeners shall be vertical. All conn. PL's may be perpendicular to the top flange.

For layout of connection plates, see Dwg. No 22 of 38.

For Haunch detail, see Dwg. No. 23 of 38.

For Drip Bar Details, see Common Details; Dwg. No. 5 of 16.

MOMENT & SHEAR TABLE

		GIRDER 1-5 ℄ BRG.	GIRDER 1-5 MID. PT.	GIRDER 6-9 ℄ BRG.	GIRDER 6-9 MID. PT.	GIRDER 10 ℄ BRG.	GIRDER 10 MID. PT.
D.L.	MOMENT		1758		1824	—	1844
	SHEAR	70	—	72		73	
S.D.L.	MOMENT	—	456	—	456	—	887
	SHEAR	18	—	18	—	35	
L.L.	MOMENT	—	1526	—	1583	—	1380
	SHEAR	65	29	67	30	58	26

Shears are expressed as Kips. Live Load Moments and Shears include Impact.

Moments are expressed as Foot Kips.

DESIGN LOAD TABLE

	UNIT	GIRDER 1-5 LOAD / FT.	GIRDER 6-9 LOAD / FT.	GIRDER 10 LOAD / FT
D.L.	SLAB	0.948 K/FT.	0.983 K/FT.	0.983 K/FT.
	HAUNCH	0.039 K/FT.	0.042 K/FT.	0.042 K/FT.
	GIRDER	0.235 K/FT.	0.243 K/FT.	0.259 K/FT.
	S.I.P. FORMS	0.121 K/FT.	0.125 K/FT.	0.125 K/FT.
	DIAPHRAGMS	0.040 K/FT.	0.040 K/FT.	0.040 K/FT.
	TOTAL	1.383 K/FT.	1.435 K/FT.	1.449 K/FT.
S.D.L.	CONC BARRIER	0.200 K/FT	0.200 K/FT	0.200 K/FT.
	NOISE BARRIER			0.338 K/FT
	FUTURE W.S	0.158 K/FT.	0.158 K/FT.	0.158 K/FT
	TOTAL	0.358 K/FT	0.358 K/FT.	0.696 K/FT

Assumed Live Load = HS 20-44

STATE OF NEW YORK
DEPARTMENT OF TRANSPORTATION
STRUCTURES DESIGN AND CONSTRUCTION DIVISION

Bridges 10 & 11 over Thompson Rd.

GIRDER DETAILS, TABLES : CAMBER, MOMENT & SHEAR, AND DESIGN LOADS

PROJ. ENG. G.L. Berry
SQUAD
DATE MADE
DRAWING NO. 21 OF 38

DETAILED BY
DETAIL CHECKED BY S.P.H.

FED. RD. REG. NO.	STATE	FEDERAL AID PROJECT NO.
	NEW YORK	IR-81-2(154)

INTERSTATE RTE. 570 EXTENSION (
NORTHERN BLVD. TO BEAR ROAD INTE
ONONDAGA COUNTY

CAPITAL PROJECT IDENTIFICATION NO. 310

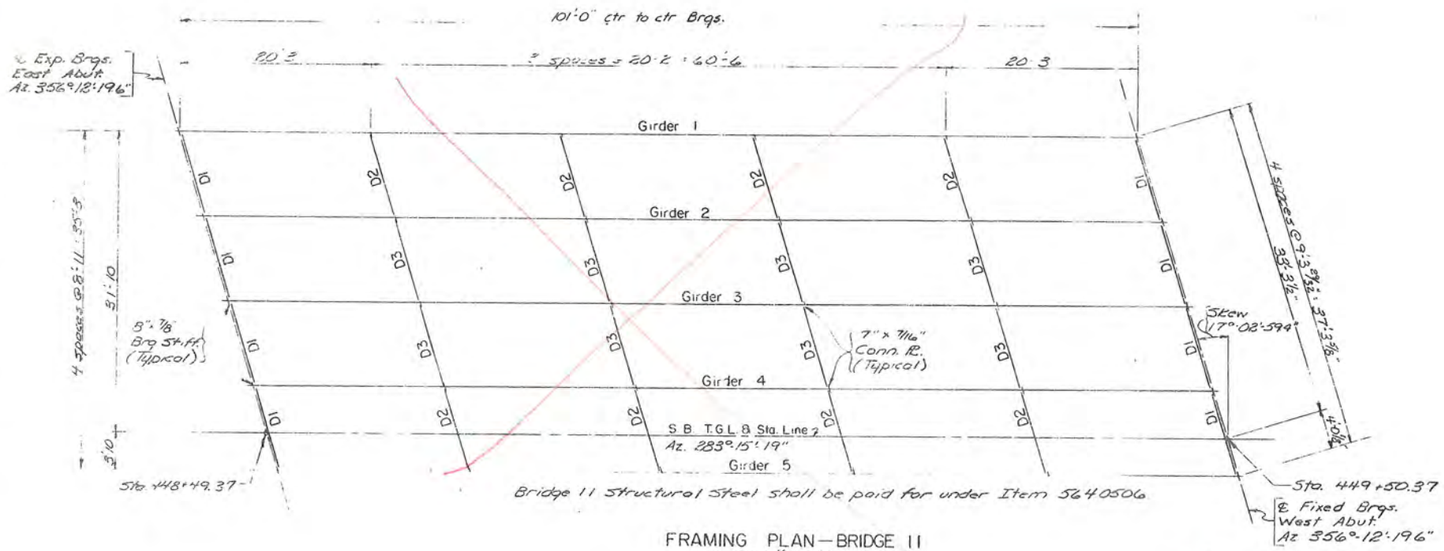

Bridge 11 Structural Steel shall be paid for under Item 5640506

FRAMING PLAN—BRIDGE 11
Scale: 1/8" = 1'-0"

20-

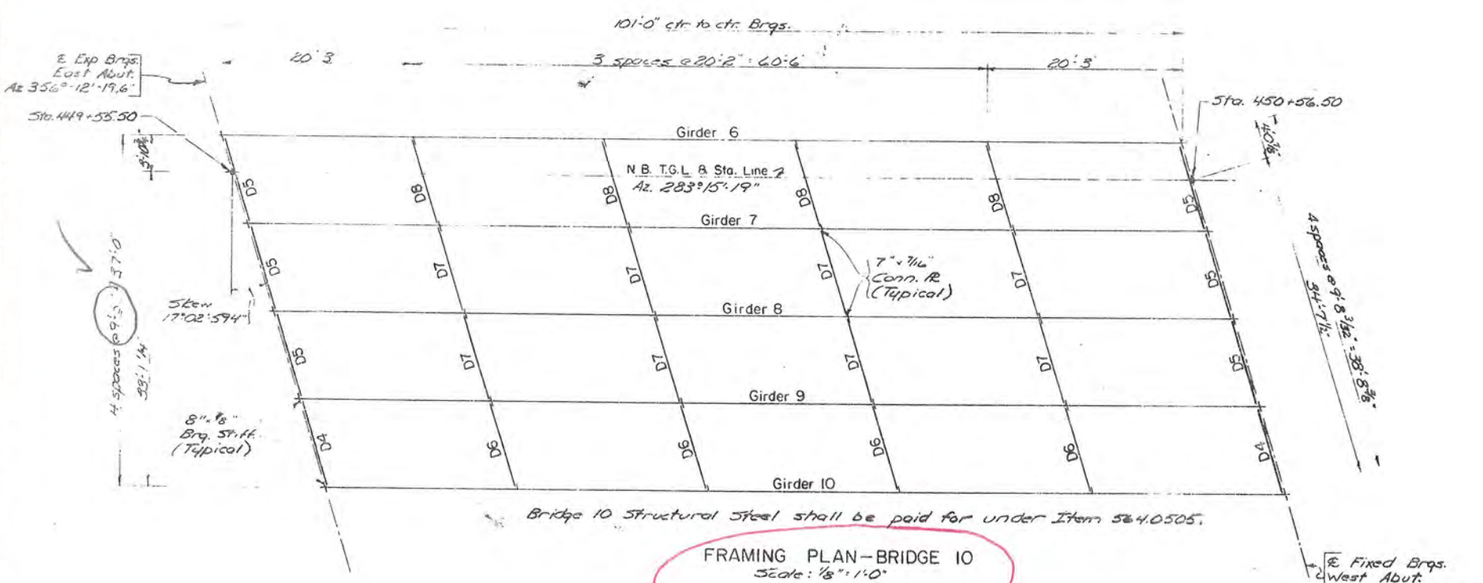

Bridge 10 Structural Steel shall be paid for under Item 5640505.

FRAMING PLAN—BRIDGE 10
Scale: 1/8" = 1'-0"

DESIGNED BY J. D. Zeh
DESIGN CHECKED BY S.P.H.
DETAILED BY K.
DETAIL CHECKED BY

STATE OF NEW YOR
DEPARTMENT OF TRANSPO
STRUCTURES DESIGN AND CONSTRU

Bridges 10 & 11 over Thomp

FRAMING PLANS

PROJ. ENG. E. J. Barry
DATE MADE

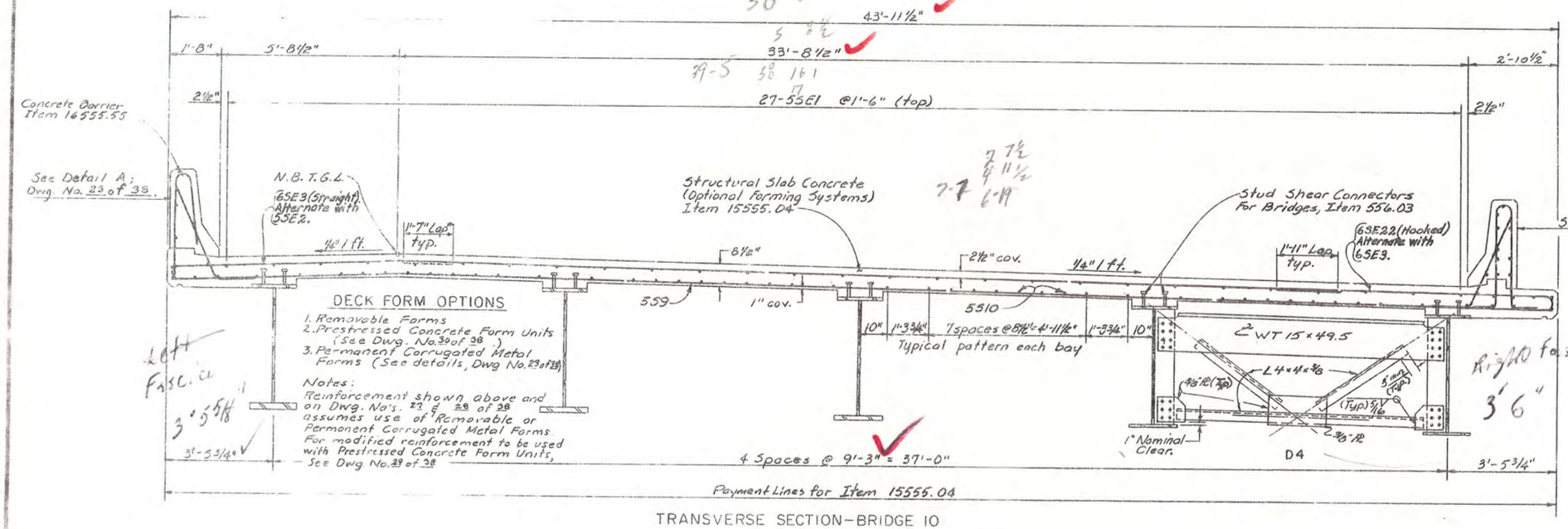

TRANSVERSE SECTION – BRIDGE 10

Scale: ½" = 1'-0"

FASCIAE OVERHANG AVERAGE OUT TO 3'-5¾"

DIAPHRAGMS D-5 - D-8 NOT S (SEE DWG. NO. 22 OF 38)		
BRIDGE 10 DIAPHRAGM	SAME AS BRIDGE 11 DIAPHRAGM ON DWG. NO. 23 OF 38	EXCEP
D5	D1	Membe
D6	D2	Member D6 angle
D7	D3	Membe
D8	D2	Member

For Diaphragm Notes, see Dwg. No. 23 of 38.

HAUNCH TABLE											
BRIDGE 10		℄ BRG.	0.1L	0.2L	0.3L	0.4L	0.5L	0.6L	0.7L	0.8L	0.9L	℄ BRG.
Girder 7	Ⓐ Req'd. bottom of slab elevation	413.90	413.86	413.83	413.79	413.76	413.72	413.67	413.63	413.58	413.54	413.49
	Ⓑ Top of steel El. (Field meas.)											
	Ⓒ = Ⓐ - Ⓑ											
	Ⓓ Concrete + S.D.L. Deflection	0	0.11	0.19	0.27	0.31	0.33	0.31	0.27	0.19	0.11	0
	Ⓔ Depth of haunch req'd = Ⓒ + Ⓓ ft.											
Girder 8	Ⓐ Req'd. bottom of slab elevation	413.86	413.82	413.79	413.75	413.72	413.67	413.63	413.59	413.54	413.49	413.44
	Ⓑ Top of steel El. (Field meas.)											
	Ⓒ = Ⓐ - Ⓑ											
	Ⓓ Concrete + S.D.L. Deflection	0	0.11	0.19	0.27	0.31	0.33	0.31	0.27	0.19	0.11	0
	Ⓔ Depth of haunch req'd. = Ⓒ + Ⓓ ft.											
Girder 9	Ⓐ Req'd. bottom of slab elevation	413.86	413.82	413.79	413.75	413.72	413.67	413.63	413.59	413.54	413.49	413.44
	Ⓑ Top of steel El. (Field meas.)											
	Ⓒ = Ⓐ - Ⓑ											
	Ⓓ Concrete + S.D.L. Deflection	0	0.11	0.19	0.27	0.31	0.33	0.31	0.27	0.19	0.11	0
	Ⓔ Depth of haunch req'd. = Ⓒ + Ⓓ ft.											
Girder 10	Ⓐ Req'd. bottom of slab elevation	413.45	413.42	413.39	413.35	413.31	413.27	413.22	413.18	413.13	413.08	413.03
	Ⓑ Top of steel El. (Field meas.)											
	Ⓒ = Ⓐ - Ⓑ											
	Ⓓ Concrete + S.D.L. Deflection	0	0.11	0.19	0.27	0.31	0.33	0.31	0.27	0.19	0.11	0
	Ⓔ Depth of haunch req'd. = Ⓒ + Ⓓ ft.											
Girder 11	Ⓐ Req'd. bottom of slab elevation	413.25	413.22	413.18	413.14	413.10	413.06	413.02	412.97	412.92	412.87	412.82
	Ⓑ Top of steel El. (Field meas.)											
	Ⓒ = Ⓐ - Ⓑ											
	Ⓓ Concrete + S.D.L. Deflection	0	0.11	0.22	0.29	0.34	0.36	0.34	0.29	0.22	0.11	0

Note: Computations in the Haunch Table shall be algebraic.

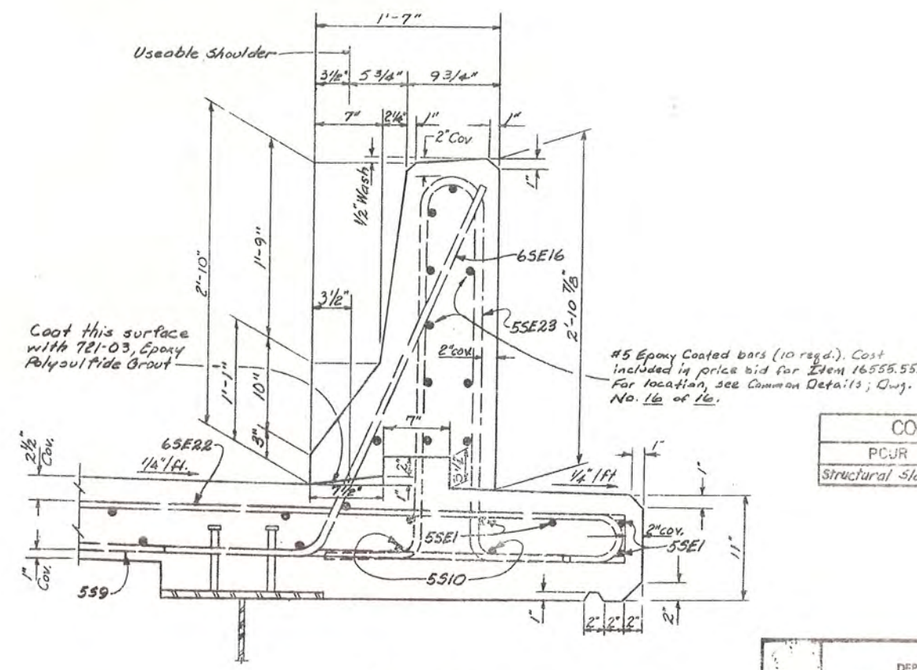

DETAIL B

Scale: 1½" = 1'-0"

CONCRETE TABL	
PCUR	ITEM
Structural Slab	4542

NOTE:

Haunch Table is based upon use of the Girder which would be used with Deck Form Type 2. (See Girder Table; Dwg. No. 21 of 38.

CAPITAL PROJECT IDENTIFICATION NO. 3107

STATE OF NEW YORK
DEPARTMENT OF TRANSPORTATION
STRUCTURE DESIGN AND CONSTRUCTION

Bridge 10 over Thompson Rd.

TRANSVERSE SECTION & HAUNCH
BRIDGE 10

DETAILED BY: Vic Pulvano
DESIGN CHECKED BY: S.P. Hollond
DETAIL CHECKED BY: Richland

D250416

FED. RD. REG. NO.	STATE	FEDERAL AID PROJECT NO.	SHEET NO.	TOTAL SHEETS
	NEW YORK	~~IM-481-2(134)~~ IB-81-2(164)	304	380

INTERSTATE RTE. 570 EXTENSION (I-481)
NORTHERN BLVD. TO BEAR ROAD INTERCHANGE
ONONDAGA COUNTY

CAPITAL PROJECT IDENTIFICATION NO. 3107.00(01)

#5 Epoxy Coated Bars (2 sets of 6 req'd.).
Cost included in price bid for Item 16555.55.
See Detail A, Dwg. No. 23 of 38 for location.

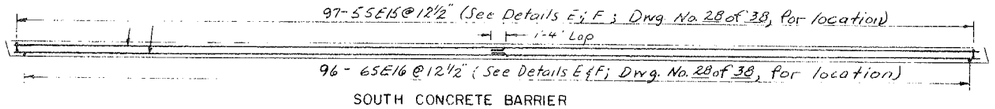

SOUTH CONCRETE BARRIER

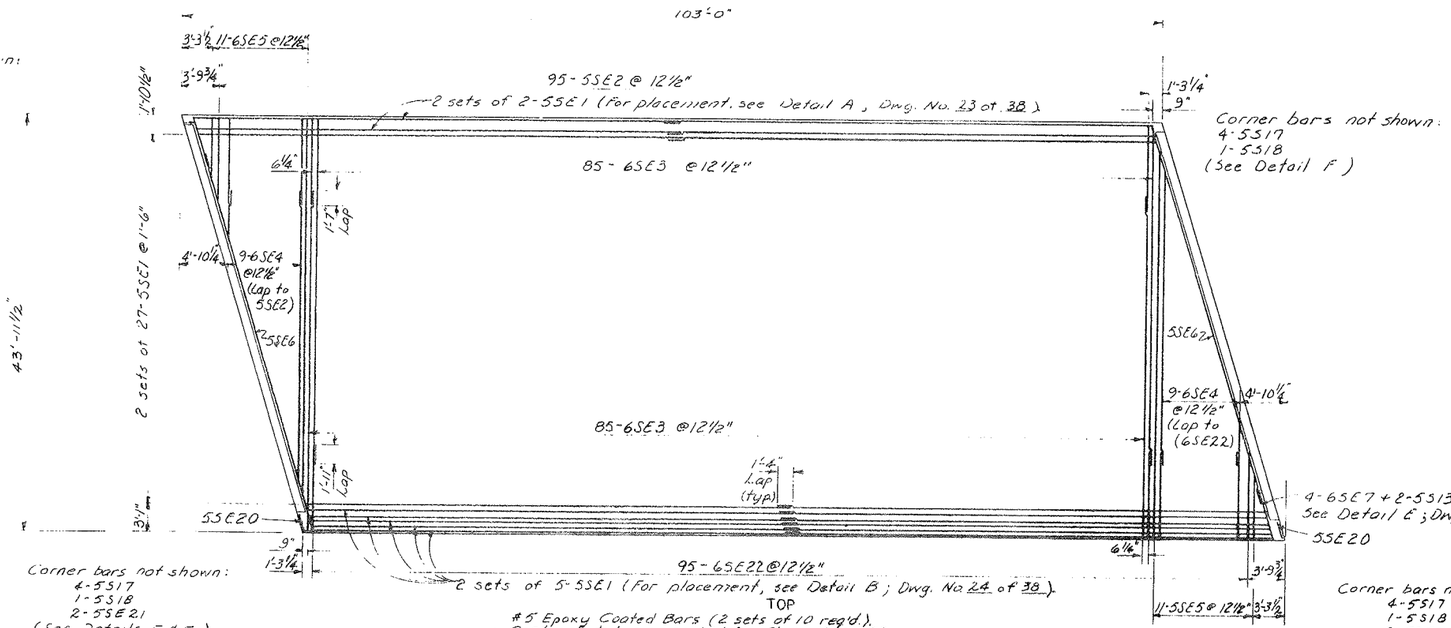

NORTH CONCRETE BARRIER

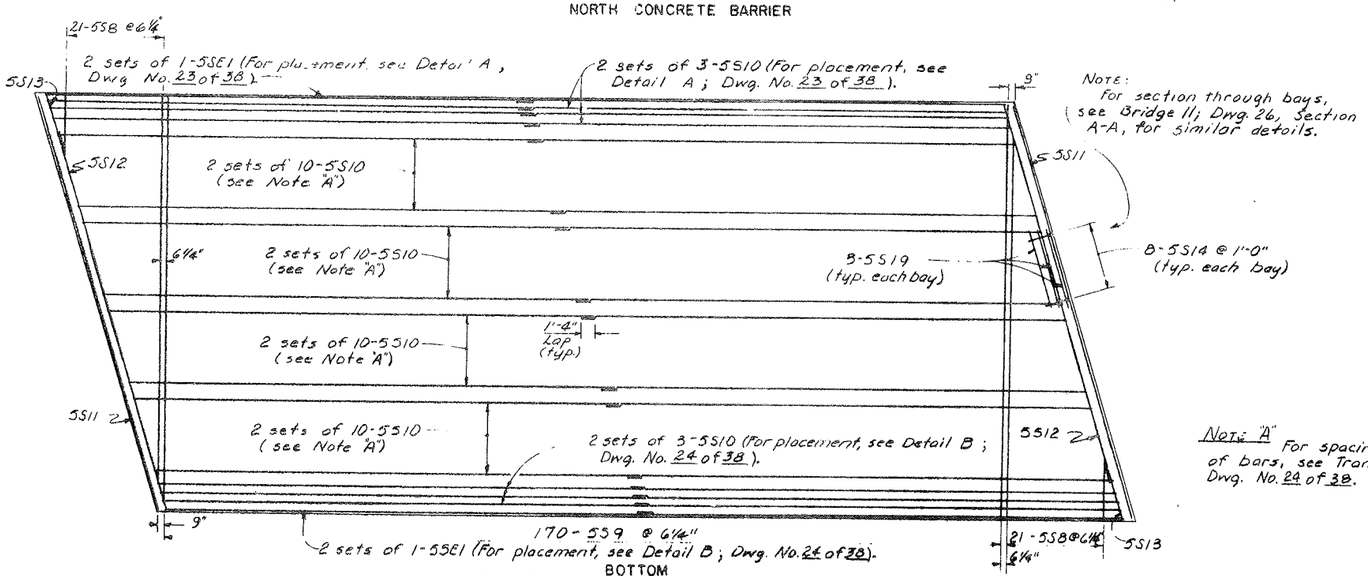

BOTTOM
SUPERSTRUCTURE REINFORCEMENT PLAN
Scale: 1/8" = 1'-0"

Note:
For section through bays, see Bridge 11; Dwg. 26, Section A-A, for similar details.

Note "A" For spacing and/or location of bars, see Transverse Section; Dwg. No. 24 of 38.

SUPERSTRUCTURE BAR LIST - BRIDGE 10

MARK	NO.	LENGTH	TYP.	WEIGHT	A	B	C	D	E	F	G	H	J	K	L	R	S	T
SUPERSTRUCTURE																		
Slab																		
5SE1	72	51-2	Str.															
5SE2	95	8-10	1		0-7	8-3					0		0-5					
6SE3	170	36-11	Str.															
6SE4	18	Avg. 18-11	Str.															
6SE4					Length varies from 5-4 to 32-6 (2 sets of 9)													
6SE5	22	Avg. 24-0	Str.															
6SE5					Length varies from 7-0 to 41-0 (2 sets of 11)													
5SE6	2	41-8	Str.															
6SE7	8	6-2	1		0-8	5-6					0		0-6					
5S8	42	Avg. 24-0	Str.															
5S8					Length Varies from 7-0 to 41-0 (2 sets of 21)													
5S9	170	43-7	Str.															
5S10	92	51-2	Str.															
5S11	2	45-8	Str.															
5S12	2	41-8	Str.															
5S13	4	5-6	Str.															
5S14	64	2-9	15					1-6				0-3	0-7		0-10		1-0	
5SE15	97	6-1	2			2-2	0-9	3-2	0	0-4	0			2-2		0-3		
6SE16	289	4-11	8			1-4	3-7	0				3-3		1-5				
5S17	16	2-3	Str.															
5S18	4	5-1	Str.															
5S19	24	9-4	Str															
5SE20	2	2-0	Str.															
5SE21	4	2-3	Str.															
6SE22	95	9-3	1		0-8	8-7					0		0-6					
5SE23	194	8-10	14		0	0	0-6		0-10	0-10	0	0	0	3-2	3-2	0-3	3-2	3-2

Cost of this reinforcement shall be included in unit price bid for item 15555.04

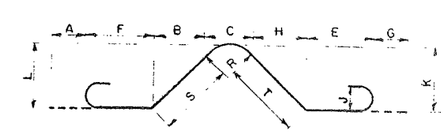

TYPE 14

For configuration of Types 1, 2, 8 & 15, see Dwg. No. 33 of 38.

For additional details of reinforcement, see Dwg Nos 23, 24 & 28 of 38.

For details E & F, see Dwg. No 28 of 38

STATE OF NEW YORK
DEPARTMENT OF TRANSPORTATION
STRUCTURES DESIGN AND CONSTRUCTION DIVISION

Bridge 10 over Thompson Rd.

SUPERSTRUCTURE REINFORCEMENT - BRIDGE 10

(For use with Removable Forms or Permanent Corrugated Metal Forms)

PROJ. ENG. | DATE MADE

3/3 1072792

D259214

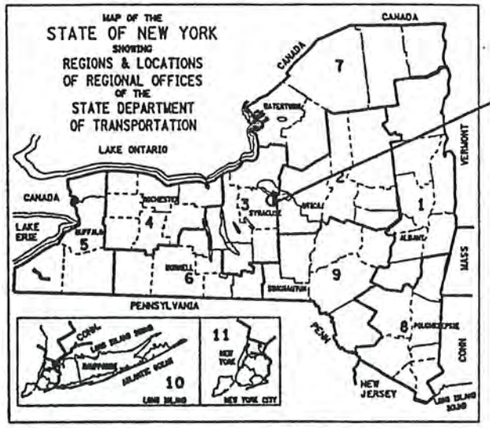

THIS IS A BRIDGE REHABILITATION PROJECT ON VARIOUS BRIDGES ON INTERSTATE 481, LOCATED IN THE TOWNS OF CICERO AND DEWITT IN ONONDAGA COUNTY. THIS WORK CONSISTS OF BRIDGE JOINTS, BEARINGS, BRIDGE RAIL AND CONCRETE REPAIR OF SUBSTRUCTURES. THERE ARE 28 BRIDGES IN THE PROJECT BEGINNING AT REFERENCE MARKER 481I-3301-1000 SOUTH OF THE CITY OF SYRACUSE AND ENDING AT REFERENCE MARKER 481I-3301-2143. I481 INTERCHANGE NORTH OF THE CITY.

STATE OF NEW YORK
DEPARTMENT OF TRANSPORTATION
OFFICE OF ENGINEERING

BRIDGE REHABILITATION PROJECT (ELEMENT SPECIFIC)
VARIOUS BRIDGES ON INTERSTATE 481
TOWNS OF DEWITT AND CICERO

VOLUME 1 OF 2

432 SHEETS ONONDAGA COUNTY CONTRACT D259214

F.A. PROJECT

STANDARD SHEETS

M203-4, M203-5, M203-6R1, M603-1
M606-32, M606-33, M606-34,
M619-3R1, M619-4, M619-5
M685-1, M685-2R1, M685-3R1
M685-4R1, M685-5R1, M403-1, M203-4,
M203-5, M203-6R1, M603-1

BJO 9/1/04
7/12/06
Bruce Goodlo 7/13/2010
Pete Rechlin 6/8/12

ALL WORK CONTEMPLATED UNDER THIS CONTRACT IS TO BE COVERED BY AND IN CONFORMITY WITH THE STANDARD SPECIFICATIONS (METRIC UNITS) OF JANUARY 2, 2002, AS AMENDED BY ADDENDA NOS. 1 AND 2, EXCEPT AS MODIFIED ON THESE PLANS AND IN THE ITEMIZED PROPOSAL.

CONTRACTOR'S NAME _____
AWARD DATE _____
COMPLETION DATE _____
FINAL ACCEPTANCE DATE _____
REGIONAL DIRECTOR _____
ENGINEER IN CHARGE _____
FINAL COST TOTAL _____

FISCAL SHARE COST(S)

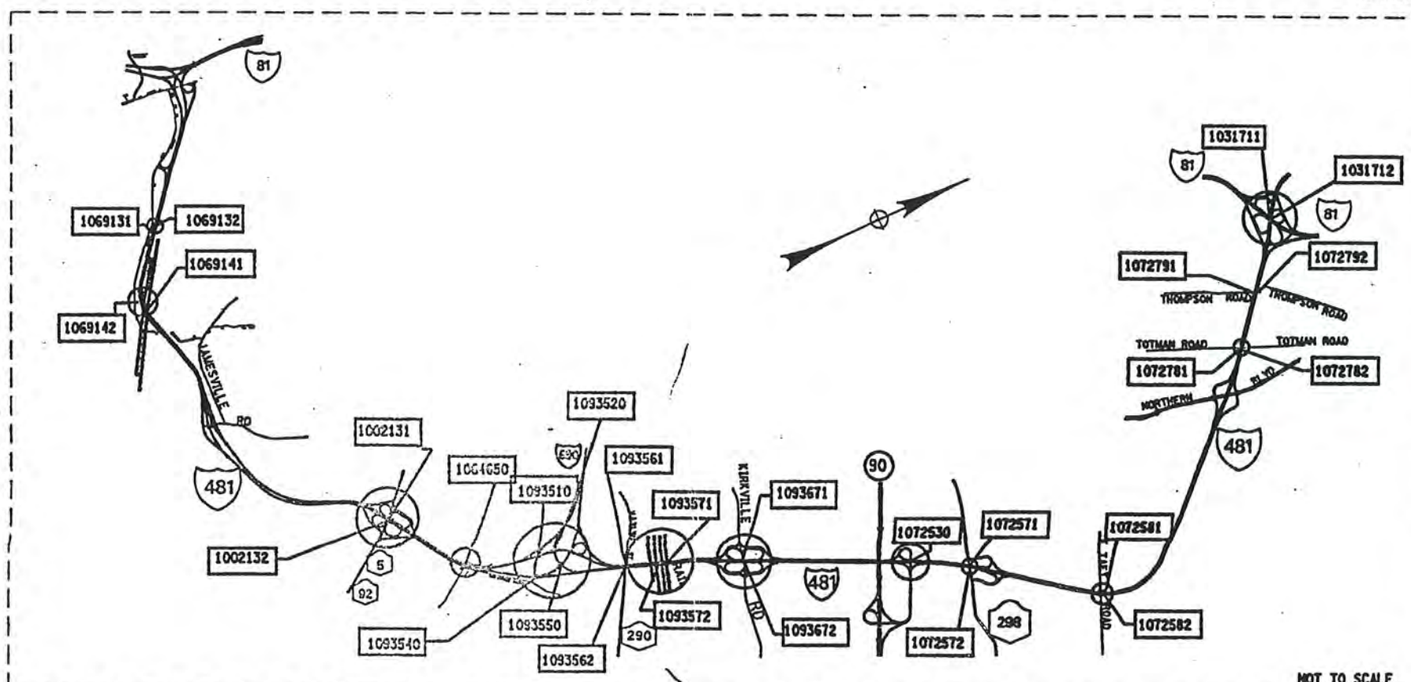

NOT TO SCALE

PROJECT LOCATION

BRIDGE REHAB. PROJ.- ELEMENT SPECIFIC			
VARIOUS BRIDGES ON INTERSTATE 481			
TOWNS OF DEWITT AND CICERO			
ONONDAGA COUNTY			
FED. ROAD REG. NO.	STATE	SHEET NO.	TOTAL SHEETS
1	N.Y.	1	432
FEDERAL AID PROJECT NO.			
CAPITAL PROJECT IDENTIFICATION NO. 3056.13			
INDEX ON SHEET NO. 5 & 6			

RECOMMENDED BY John E. Fretz 9/04/02
REGIONAL DESIGN ENGINEER DATE

RECOMMENDED BY Myron A. Quigley 9/4/02
REGIONAL CONSTRUCTION ENGINEER DATE

RECOMMENDED BY 9/04/02
REGIONAL TRANSPORTATION MAINTENANCE ENGINEER DATE

RECOMMENDED BY 9-4-02
REGIONAL TRAFFIC ENGINEER DATE

APPROVED BY 09-04-02
REGIONAL DIRECTOR DATE

DESIGN SUPERVISOR Clement J. JOB MANAGER Nick DeCirce DESIGNED BY Matt Way DRAFTED BY Chris Spolar CHECKED BY Alex Pryor ESTIMATED BY Matt Way CHECKED BY Alex Pryor

FED ROAD REG. NO.	STATE	CONTRACT NO.	SHEET NO.	TOTAL SHEETS
1	N.Y.	D259214	5	432

BRIDGE REHABILITATION PROJECT (ELEMENT SPECIFIC)
VARIOUS BRIDGES ON INTERSTATE 481
TOWNS OF DEWITT AND CICERO
ONONDAGA COUNTY
P.I.N. 305613 B.I.N. ALL BINS

INDEX

SHEET NO.	DESCRIPTION	DRAWING NO.
1	TITLE SHEET	COVER
2,3,4	ESTIMATE OF QUANTITIES	
5,6	INDEX	IDX-1 - IDX-2
7-155	MAINTENANCE AND PROTECTION OF TRAFFIC	MPT-1 - MPT-149
156	CROSSOVER TYPICAL SECTION	CTS-1
157-160	CROSSOVER SURVEY CONTROL DATA	HC-1 - HC-4
161-166	CROSSOVER PLANS	CPL-1 - CPL-6
167-174	CROSSOVER PROFILES	CPR-1 - CPR-8
175-177	CROSSOVER MISC. DETAILS	CMD-1 - CMD-3
178-179	CROSSOVER MISC. TABLES	CMT-1 - CMT-2
180-191	ESTIMATE OF QUANTITIES BY STRUCTURE	QE-1A - QE-4C
192	GENERAL NOTES	GN-1
193	BIN 1002131, I481SB/RT. 5, PLAN AND ELEVATION	GP1-1
194	BIN 1002131, TYPICAL BRIDGE SECTION AND PROFILE	TS1-1
195-197	BIN 1002131, SOUTH ABUTMENT (SB)	AB1-1 - AB1-3
198-199	BIN 1002131, NORTH ABUTMENT (SB), SHEET PILING LAYOUT	AB1-4 - AB1-5
200-201	BIN 1002131 PIER 1 & PIER 2 SB REMOVAL DETAILS	PR1-1 & PR1-2
202	BIN 1002131, PEDESTAL REPLACEMENT	PR1-3
203	BIN 1002131, BOLSTER DETAILS	PR1-4
204	BIN 1002131, ANCHOR BOLT LAYOUT (SB)	PR1-5
205	BIN 1002132, I481NB/RT. 5, PLAN AND ELEVATION	GP2-1
206-207	BIN 1002132, TYPICAL BRIDGE SECTION AND PROFILE, APPROACH SECTION	TS2-1 & TS2-2
208-213	BIN 1002132, SOUTH ABUTMENT (NB)	AB2-1 - AB2-6
214-219	BIN 1002132, NORTH ABUTMENT (NB)	AB2-7 - AB2-12
220-221	BIN 1002132, PIERS (NB)	PR2-1 & PR2-2
222	BIN 1002132, PEDESTAL REPLACEMENT (NB)	PR2-3
223	BIN 1002132, BOLSTER DETAILS (NB)	PR2-4
224	BIN 1002132, ANCHOR BOLT LAYOUT (NB)	PR2-5
225	BIN 1031711 AND 1031712, I-481/I-81, PLAN AND ELEVATION	GP3-1
226	BIN 1031711 & 1031712, TYPICAL BRIDGE SECTION AND PROFILE	TS3-1
227	BIN 1031711, EAST ABUTMENT (SB) PLAN & ELEVATION	AB3-1
228	BIN 1031711, WEST ABUTMENT (SB) PLAN & ELEVATION	AB3-2
229	BIN 1031712, EAST ABUTMENT (NB) PLAN & ELEVATION	AB3-3
230	BIN 1031712, WEST ABUTMENT (NB) PLAN & ELEVATION	AB3-4
231	BIN 1031711 & 1031712, APPROACH SLABS	AS3-1
232	BIN 1064650, KINNE RD/I-481, PLAN, ELEVATION, AND BRIDGE SECTION	GP4-1
233	BIN 1069131 & 1069132, I-481/QUARRY DRIVEWAY, PLAN AND ELEVATION	GP5-1
234	BIN 1069131 & 1069132, TYPICAL BRIDGE SECTION AND PROFILE AND BRIDGE SECTION	TS5-1
235	BIN 1069131, WEST ABUTMENT (SB) PLAN & ELEVATION	AB5-1
236	BIN 1069131, EAST ABUTMENT (SB) PLAN & ELEVATION	AB5-2
237	BIN 1069132, EAST ABUTMENT (NB) PLAN & ELEVATION	AB5-3
238-239	BIN 1069141 & 1069142, I-481/NYS + W RAILROAD, GENERAL PLAN AND ELEVATION	GP6-1 - GP6-2
240-241	BIN 1069141 & 1069142, TYPICAL BRIDGE SECTION AND PROFILES	TS6-1 & TS6-2
242	BIN 1069141, WEST ABUTMENT (SB) PLAN & ELEVATION	AB6-1
243	BIN 1069141, EAST ABUTMENT (SB) PLAN & ELEVATION	AB6-2
244	BIN 1069142, WEST ABUTMENT (NB) PLAN & ELEVATION	AB6-3
245	BIN 1069142, EAST ABUTMENT (NB) PLAN & ELEVATION	AB6-4

INDEX (CONTINUED)

SHEET NO.	DESCRIPTION	DRAWING NO.
246	BIN 1072530, RAMP TO I-481/I-481, PLAN, ELEVATION AND BRIDGE SECTION	GP7-1
247-248	BIN 1072530, EAST ABUTMENT	AB7-1 - AB7-2
249	BIN 1072571 & BIN 1072572, I-481/ROUTE 298 PLAN AND ELEVATION AND BRIDGE SECTION	GP8-1
250	BIN 1072571 & BIN 1072572, TYPICAL BRIDGE SECTION AND PROFILE	TS8-1
251	BIN 1072571, SOUTH ABUTMENT (SB) PLAN & ELEVATION	AB8-1
252	BIN 1072571, NORTH ABUTMENT (SB) PLAN & ELEVATION	AB8-2
253	BIN 1072572, SOUTH ABUTMENT (NB) PLAN & ELEVATION	AB8-3
254	BIN 1072581 & BIN 1072582, I-481/TAFT ROAD, PLAN AND ELEVATION	GP9-1
255	BIN 1072581 & 1072582, TYPICAL BRIDGE SECTION AND PROFILE	TS9-1
256-257	BIN 1072581, SOUTH ABUTMENT AND NORTH ABUTMENT (SB)	AB9-1 & AB9-2
258-259	BIN 1072582, SOUTH ABUTMENT AND NORTH ABUTMENT (NB)	AB9-3 & AB9-4
260	BIN 1072781 & BIN 1072782, I-481/TOTMAN ROAD, PLAN, ELEVATION AND BRIDGE SECTION	GP10-1
261	BIN 1072781 & BIN 1072782 TYPICAL BRIDGE SECTION AND PROFILE	TS10-1
262-263	BIN 1072781, EAST ABUTMENT (SB) PLAN & ELEVATION	AB10-1 & AB10-2
264	BIN 1072782, WEST ABUTMENT (NB) PLAN & ELEVATION	AB10-3
265	BIN 1072781, APPROACH SLABS	AS10-1
266	BIN 1072791 & BIN 1072792, I-481/ THOMPSON ROAD, PLAN, ELEVATION AND BRIDGE SECTION	GP11-1
267	BIN 1072791 & BIN 1072792 TYPICAL BRIDGE SECTIONS AND PROFILE	TS11-1
268	BIN 1072791, EAST & WEST ABUTMENTS (SB)	AB11-1
269	BIN 1072791, APPROACH SLAB (SB)	AS11-1
270	BIN 1093510, I-690 RAMP/ I-481SB, PLAN, ELEVATION, AND BRIDGE SECTION	GP12-1
271	BIN 1093510, WEST ABUTMENT PLAN & ELEVATION	AB12-1
272	BIN 1093520, NN LINE OVER INTERSTATE 481 SB, PLAN, ELEVATION, AND BRIDGE SECTION	GP13-1
273	BIN 1093520, WEST ABUTMENT PLAN & ELEVATION	AB13-1
274	BIN 1093540, I-690 EB/ I-481 NB RAMP, PLAN, ELEVATION, AND BRIDGE SECTION	GP14-1
275	BIN 1093540 TYPICAL BRIDGE SECTION AND PROFILE	TS14-1
276	BIN 1093540, WEST ABUTMENT	AB14-1
277	BIN 1093550, I-481 NB/WB CONNECTOR, PLAN, ELEVATION, AND BRIDGE SECTION	GP15-1
278	BIN 1093550, SOUTH ABUTMENT, NB PLAN & ELEVATION	AB15-1
279	BIN 1093550, NORTH ABUTMENT, NB PLAN & ELEVATION	AB15-2
280	BIN 1093561 & 1093562, I-481/ROUTE 290, PLAN, ELEVATION AND BRIDGE SECTION	GP16-1
281	BIN 1093561 & 1093562 TYPICAL BRIDGE SECTION AND PROFILE	TS16-1
282	BIN 1093561, SOUTH ABUTMENT (SB) PLAN & ELEVATION	AB16-1
283	BIN 1093562, SOUTH ABUTMENT (NB) PLAN & ELEVATION	AB16-2
284-287	BIN 1093571 & BIN 1093572, I-481/CSX RAILROAD YARD, PLAN & ELEVATION	GP17-1 - GP17-4
288	BIN 1093571 AND BIN 1093572, TYPICAL BRIDGE SECTION AND PROFILES	TS17-1
289-293	BIN 1093571 AND BIN 1093672, DRAINAGE DETAILS	DD17-1 - DD17-5
294-296	BIN 1093571 AND BIN 1093672, SCUPPER EXTENSIONS	DD17-6 - DD17-8
297-314	BIN 1093571, PIERS 1-14, (SB)	PR17-1S - PR17-18S
315	BIN 1093572, SOUTH ABUTMENT (NB)	AB17-1
316-329	BIN 1093572, PIERS 1-14 (NB)	PR17-1N - PR17-14N
330-331	BIN 1093571 AND 1093572, PARAPET REPAIR DETAILS	PW17-1 & PW17-2
332	BIN 1093572, BRIDGE DECK REPAIRS	DR17-1

ALL DIMENSIONS ARE IN m UNLESS OTHERWISE NOTED

AS BUILT REVISIONS

SIGNATURE DATE

INTERSTATE 481
REHABILITATION PROJECT

INDEX

STATE OF NEW YORK
DEPARTMENT OF TRANSPORTATION

FILENAME	REGION	DATE	DRAWING NO.
305613AA.L2A	3	10/02	IDX-1

DESIGNED BY ____ CHECKED BY ____ ESTIMATED BY ____ DRAFTED BY ____ CHECKED BY ____

FED ROAD REG. NO.	STATE	CONTRACT NO.	SHEET NO.	TOTAL SHEETS
1	N.Y.	D259214	6	432

BRIDGE REHABILITATION PROJECT (ELEMENT SPECIFIC)
VARIOUS BRIDGE ON INTERSTATE 481
TOWN OF DEWITT AND CICERO
ONONDAGA COUNTY
P.I.N. 305613 B.I.N. VARIOUS

INDEX (CONTINUED)

SHEET NO.	DESCRIPTION	DRAWING NO.
333	BIN 1093671 & 1093672, I-481/KIRKVILLE ROAD, PLAN, ELEVATION AND BRIDGE SECTION	GP18-1
334	BIN 1093671 & BIN 1093672 TYPICAL BRIDGE SECTION AND PROFILE	TS18-1
335-336	BIN 1093671, SOUTH ABUTMENT (SB) PLAN, ELEVATION AND SECTIONS	AB18-1 - AB18-2
337	BIN 1093671, NORTH ABUTMENT (SB) PLAN & ELEVATION	AB18-3
338-339	BIN 1093672, SOUTH ABUTMENT (NB) PLAN, ELEVATION AND SECTIONS	AB18-4 - AB18-5
340	BIN 1093672, NORTH ABUTMENT (NB) PLAN & ELEVATION	AB18-6
341-342	BIN 1002131, BIN 1002132 & BIN 1093571, MULTIROTATIONAL BEARINGS	BR-1 & BR-2
343	BIN 1002131, BEARING RESTORATION DETAILS	BR-3
344	BINS 1069131 & 1069132, BEARING RESTORATION DETAILS	BR-4
345-346	BIN 1069141 & BIN 1069142, BEARING RESTORATION DETAIL	BR-5 & BR-6
347	BIN 1072530, BEARING RESTORATION DETAILS	BR-7
348	BIN 1072791 AND BIN 1072792 BEARING RESTORATION DETAILS	BR-8
349	BIN 1093550, BEARING RESTORATION DETAILS	BR-9
350-351	BINS 1093751 & 1093572, BEARING RESTORATION DETAILS	BR-10 & BR-11
352	BIN 1072781 BEARING RESTORATION DETAILS	BR-12
	RAILING DETAILS	
353-355	BIN 1002131 & BIN 1002132, RAILING DETAILS	RD-1 - RD-3
356-358	BIN 1069141 & BIN 1069142, RAILING DETAILS	RD-4 - RD-6
359-360	RAILING DETAILS	RD-7 - RD-8
	BRIDGE JOINTS	
361-364	BRIDGE JOINT TABLE	JT-1 - JT-4
365	COMPRESSION SEAL JOINT DETAIL (ALL BRIDGES)	JD-1
366-370	BIN 1002131, JOINT DETAILS	JD-2 - JD-6
371-375	BIN 1002132, JOINT DETAILS	JD-7 - JD-11
376-377	BIN 1031711 & BIN 1031712, JOINT DETAILS	JD-12 - JD-13
378-383	BIN 1064650, JOINT DETAILS	JD-14 - JD-19
384-385	BIN 1069131, JOINT DETAILS	JD-20 + JD-21
386-387	BIN 1069132, JOINT DETAILS	JD-22 + JD-23
388-392	BIN 1069141 & BIN 1069142	JD-24 - JD-28
393-394	BIN 1072530, JOINT DETAILS	JD-29 + JD-30
395-396	BIN 1072571, JOINT DETAILS	JD-31 + JD-32
397-398	BIN 1072572, JOINT DETAILS	JD-33 + JD-34
399-400	BIN 1072581, JOINT DETAILS	JD-35 + JD-36
401-402	BIN 1072582, JOINT DETAILS	JD-37 + JD-38
403-404	BIN 1072781, JOINT DETAILS	JD-39 + JD-40
405-406	BIN 1072782, JOINT DETAILS	JD-41 + JD-42
407-408	BIN 1072792, JOINT DETAILS	JD-43 + JD-44
409-410	BIN 1093510, JOINT DETAILS	JD-45 + JD-46
411	BIN 1072791, BIN 1093520 & BIN 1093540, JOINT DETAILS	JD-47
412-413	BIN 1093550, JOINT DETAILS	JD-48 + JD-49
414-416	BIN 1093561 & BIN 1093562, JOINT DETAILS	JD-50 - JD-52
417-420	BIN 1093571 & BIN 1093572, JOINT DETAILS	JD-53 - JD-56
421-423	BIN 1093671 & BIN 1093672, JOINT DETAILS	JF-57 - JD-59

INDEX (CONTINUED)

SHEET NO.	DESCRIPTION	DRAWING NO.
424	VARIOUS BRIDGES - ROAD PLATE DETAIL	AA - RP1
	BAR LIST	
425-428	ALL BINS (BRIDGE JOINT SYSTEMS)	BL-1 - BL-4
429	BIN 1002131 & 1002132	BL-5
430	BIN 1093571	BL-6
431	STRUCTURAL SLAB OVERLAY & ASPHALT PAVEMENT REPAIR DETAILS	MS-1
432	MISC. TABLE	MT-1

ALL DIMENSIONS ARE IN m UNLESS OTHERWISE NOTED

AS BUILT REVISIONS

SIGNATURE DATE

INTERSTATE 481
REHABILITATION PROJECT

INDEX

STATE OF NEW YORK
DEPARTMENT OF TRANSPORTATION

FILENAME	REGION	DATE	DRAWING NO.
305613AA12A	3	10/02	IDX-2

CHECKED BY
DRAFTED BY
ESTIMATED BY
CHECKED BY
DESIGNED BY

FED ROAD REG. NO.	STATE	CONTRACT NO.	SHEET NO.	TOTAL SHEETS
1	N.Y.	D259214	186	432

BRIDGE REHABILITATION PROJECT (ELEMENT SPECIFIC)
VARIOUS BRIDGES ON INTERSTATE 481
TOWNS OF DEWITT AND CICERO
ONONDAGA COUNTY
P.I.N. 305613 B.I.N. VARIOUS

ESTIMATE OF QUANTITIES BY STRUCTURE

ITEM #	DESCRIPTION	UNIT	1072781		1072782		1072791		1072792		1093510		1093520		1093540	
			EST.	FINAL	EST.	FINAL	EST.	FINAL	EST.	FINAL	EST.	FINAL	EST.	FINAL	EST.	FINAL
203.02 M	UNCLASSIFIED EXCAVATION & DISPOSAL	CM	2		—		2		—		—		—		—	
203.03 M	EMBANKMENT IN PLACE	CM	—		—		—		—		—		—		—	
203.07 M	SELECT GRANULAR FILL	CM	—		—		—		—		—		—		—	
203.1770 M	CLEAN EXISTING PIPE CULVERT	M	—		—		—		—		—		—		—	
203.18 M	CLEANING CLOSED DRAINAGE SYSTEMS	M	—		—		—		—		—		—		—	
203.19 M	CLEAN DRAINAGE STRUCTURES AND MANHOLES	EA	—		—		—		—		—		—		—	
203.21 M	SELECT STRUCTURE FILL	CM	—		—		—		—		—		—		—	
15203.51 M	GRADING, CLEANING AND RESHAPING EXISTING DITCHES	M	—		—		—		—		—		—		—	
206.01 M	STRUCTURE EXCAVATION	CM	—		—		—		—		—		—		—	
206.02 M	TRENCH AND CULVERT EXCAVATION	CM	—		—		—		—		—		—		—	
207.10 M	GEOTEXTILE BEDDING	SM	—		—		—		—		—		—		—	
210.5433 M	REMOVAL AND DISPOSAL OF ASBESTOS CONTAINING CAULKING (BV 12)	LS	—		—		—		—		—		—		—	
210.9913 M	REMOVAL AND DISPOSAL OF MISC. ASBESTOS CONTAINING MATERIAL BV-12	LS	—		—		—		—		—		NEC		—	
304.15 M	SUBBASE COURSE, OPTIONAL TYPE	CM	—		—		—		—		—		—		—	
402.128201 M	12.5mm F2 SUPERPAVE HMA, 80 SERIES COMPACTION	MT	3		—		3		—		3		—		—	
402.128211 M	PLANT PRODUCTION QUALITY ADJUSTMENT TO ITEM 402.128201M	QU	1		—		1		—		1		—		—	
402.258901 M	25mm F9 SUPERPAVE HMA, 80 SERIES COMPACTION	MT	—		—		—		—		4		—		—	
402.258911 M	PLANT PRODUCTION QUALITY ADJUSTMENT TO 402.258901M	QU	—		—		—		—		1		—		—	
402.378901 M	37.5mm, F9 SUPERPAVE HMA, 80 SERIES COMPACTION	MT	—		—		—		—		—		—		—	
402.378911 M	PLANT PRODUCTION QUALITY ADJUSTMENT TO 402.378901M	QU	—		—		—		—		—		—		—	
407.01 M	TACK COAT	L	5		—		5		—		9		—		—	
490.30 M	MISC. COLD MILLING OF BITUMINUS CONCRETE	SM	—		—		—		—		25		—		—	
502.92 M	SEALING TRANSVERSE JOINTS	M	—		—		—		—		—		21		21	
08520.5014 M	SAWCUT, ASPH, CONC/ASPH, OVERLAY- PCC PAVE	M	74		—		48		—		17		—		—	
552.13 M	TEMPORARY STEEL SHEETING	SM	—		—		—		—		—		—		—	
555.0105 M	CONCRETE FOR STRUCTURES - CLASS A	CM	1		—		—		—		—		—		—	
555.09 M	CONCRETE FOR STRUCTURES, CLASS HP	CM	3		1		—		1		1		—		—	
18555.81 M	STRUCTURAL CRACK SEALING	LM	6		—		—		—		—		—		—	
556.0201 M	UNCOATED BAR REINFORCEMENT FOR CONCRETE STRUCTURES	KG	—		—		—		—		—		—		—	
556.0202 M	EPOXY COATED REBAR FOR STRUCTURES	KG	70		72		—		71		52		—		—	
558.01 M	TRANSVERSE SAWCUT GROOVING OF STR SLAB SURF	SM	18		—		17		—		—		—		—	
18559.1696 M	PROTECTIVE SEALER STRUCTURAL CONCRETE	SM	—		—		—		—		—		—		—	
18559.1896 M	PROT SEAL STR. CONC. - NEW BRIDGE DECK OVERLAYS	SM	—		—		—		—		—		—		—	
564.0501 M	STRUCTURAL STEEL	LS	—		—		—		—		—		—		—	
565.1522 M	TYPE M.R. EXPANSION BEARING (1001 TO 2000 KN)	EA	—		—		—		—		—		—		—	
565.1722 M	TYPE M.R. FIXED BEARING (1001 TO 2000 KN)	EA	—		—		—		—		—		—		—	
15565.4302 M	BRIDGE BEARING RESTORATION	EA	10		—		10		10		—		—		—	
566.01 M	MOODULAR EXPANSION JOINT SYSTEM, ONE-CELL	M	—		—		—		—		—		—		—	
566.02 M	MOODULAR EXPANSION JOINT SYSTEM TWO-CELL	M	—		—		—		—		—		—		—	
567.31 M	ARM JNT SYS WI COMPRESSION SEAL - TY A1	M	13		13		—		14		—		—		—	
567.32 M	ARM JNT SYS WI COMPRESSION SEAL - TY A2	M	—		—		—		—		—		—		—	
567.35 M	ARM JNT SYS WI COMPRESSION SEAL - TY A5	M	13		13		—		14		—		—		—	
567.36 M	ARM JNT SYS WI COMPRESSION SEAL - TY A6	M	—		—		—		—		—		—		—	
18567.46 M	ELASTOMERIC CONCRETE FOR BRIDGE JOINT SYSTEMS	M	—		26		—		26		—		—		—	
16567.640001 M	REPLACE COMPRESSION SEAL IN EXISTING BRIDGE JOINTS	M	—		—		28		—		18		10		10	
568.32 M	CEMENT MORTAR PADS	EA	—		—		—		—		—		—		—	
568.50 M	STEEL BRIDGE RAILING (2 RAIL)	M	—		—		—		—		—		—		—	
570.090001 M	ENVIRONMENTAL GROUND PROTECTION	LS	—		—		—		—		—		—		—	
570.090002 M	ENVIRONMENTAL GROUND PROTECTION	LS	—		—		—		—		—		—		—	
570.090003 M	ENVIRONMENTAL GROUND PROTECTION	LS	—		—		—		—		—		—		—	

ALL DIMENSIONS ARE IN m UNLESS OTHERWISE NOTED

AS BUILT REVISIONS

SIGNATURE DATE

SHEET 7 OF 12

ESTIMATE OF QUANTITIES

STATE OF NEW YORK
DEPARTMENT OF TRANSPORTATION

FILENAME	REGION	DATE	DRAWING NO.
305613.L1A	3	10/02	QE-3A

DESIGN SUPERVISOR ___ JOB MANAGER ___ DESIGNED BY ___ ESTIMATED BY ___ CHECKED BY ___ DRAFTED BY ___ CHECKED BY ___

FED ROAD REG. NO.	STATE	CONTRACT NO.	SHEET NO.	TOTAL SHEETS
1	N.Y.	D259214	187	432

BRIDGE REHABILITATION PROJECT (ELEMENT SPECIFIC)
VARIOUS BRIDGES ON INTERSTATE 481
TOWNS OF DEWITT AND CICERO
ONONDAGA COUNTY
P.I.N. 305613 B.I.N. VARIOUS

ESTIMATE OF QUANTITIES BY STRUCTURE

ITEM *	DESCRIPTION	UNIT	1072781		1072782		1072791		1072792		1093510		1093520		1093540	
			EST.	FINAL	EST.	FINAL	EST.	FINAL	EST.	FINAL	EST.	FINAL	EST.	FINAL	EST.	FINAL
570.090004 M	ENVIRONMENTAL GROUND PROTECTION	LS	—		—		—		—		—		—		—	
570.100001 M	ENVIRONMENTAL WATERWAY PROTECTION	LS	—		—		—		—		—		—		—	
570.100002 M	ENVIRONMENTAL WATERWAY PROTECTION	LS	—		—		—		—		—		—		—	
16570.32 M	LOCALIZED PAINTING OF BARE STRUCTURAL STEEL	SM	—		—		—		—		—		—		—	
16570.72 M	LOCALIZED VACUUM CONTAINED CLEANING OF STRUCTURAL STEEL PLANAR SURFACES	SM	—		—		—		—		—		—		—	
16570.76 M	LOCALIZED VACUUM CONTAINED CLEANING OF STRUCTURAL STEEL - IRREGUALR	SM	—		—		—		—		—		—		—	
571.010001 M	TREATMENT AND DISPOSAL OF PAINT REMOVAL WASTE	CM	—		—		—		—		—		—		—	
571.010002 M	TREATMENT AND DISPOSAL OF PAINT REMOVAL WASTE	CM	—		—		—		—		—		—		—	
571.010003 M	TREATMENT AND DISPOSAL OF PAINT REMOVAL WASTE	CM	—		—		—		—		—		—		—	
571.010004 M	TREATMENT AND DISPOSAL OF PAINT REMOVAL WASTE	CM	—		—		—		—		—		—		—	
572.010001 M	STRUCTURAL STEEL PAINT SYSTEM: SHOP APPLIED	SM	—		—		—		—		—		—		—	
572.010002 M	STRUCTURAL STEEL PAINT SYSTEM: SHOP APPLIED	SM	—		—		—		—		—		—		—	
576.2001M	DOWNSPOUT SYSTEM, DUCTILE IRON	M	—		—		—		—		—		—		—	
578.020001 M	OVERLAY CONCRETE - CLASS E	SM	—		—		—		—		—		—		—	
578.020002 M	OVERLAY CONCRETE - CLASS E	SM	—		—		—		—		—		—		—	
578.020003 M	OVERLAY CONCRETE - CLASS E	SM	—		—		—		—		—		—		—	
578.020004 M	OVERLAY CONCRETE - CLASS E	SM	—		—		—		—		—		—		—	
578.020005 M	OVERLAY CONCRETE - CLASS E	SM	—		—		—		—		—		—		—	
578.030001 M	SLAB RECONSTRUCTION CONCRETE - CLASS D OR E	SM	—		—		—		—		—		—		—	
578.030002 M	SLAB RECONSTRUCTION CONCRETE - CLASS D OR E	SM	—		—		—		—		—		—		—	
578.030003 M	SLAB RECONSTRUCTION CONCRETE - CLASS D OR E	SM	—		—		—		—		—		—		—	
578.030004 M	SLAB RECONSTRUCTION CONCRETE - CLASS D OR E	SM	—		—		—		—		—		—		—	
578.030005 M	SLAB RECONSTRUCTION CONCRETE - CLASS D OR E	SM	—		—		—		—		—		—		—	
578.030006 M	SLAB RECONSTRUCTION CONCRETE - CLASS D OR E	SM	18		—		—		—		—		—		—	
578.030007 M	SLAB RECONSTRUCTION CONCRETE - CLASS D OR E	SM	—		—		17		—		—		—		—	
579.02 M	REINFORCING BAR EXPOSURE	SM	26		8		17		8		—		—		—	
580.01 M	REMOVAL OF STRUCTURAL CONCRETE	CM	3		3		—		3		1		—		—	
582.05 M	REMOVE STRUCTURAL CONCRETE WITH CLASS A CONCRETE	CM	1		1		1		—		1		1		2	
582.07 M	REMOVE STRUCTURAL CONCRETE AND REPLACE WITH VERTICAL OVERHEAD PATCH MATERIAL	SM	—		—		—		—		—		—		—	
16584.13 M	RAPID SETTING CONCRETE FOR BRIDGE AND APPROACH SLAB REPAIRS	KG	—		—		—		—		—		—		—	
585.01 M	STRUCTURAL LIFTING OPERATIONS - TYPE A	EA	10		—		10		10		—		—		—	
585.02 M	STRUCTURAL LIFTING OPERATIONS - TYPE B	EA	—		—		—		—		—		—		—	
585.03 M	STRUCTURAL LIFTING OPERATIONS TYPE C	EA	—		—		—		—		—		—		—	
586.01 M	DRILL AND GROUT BOLTS, OR REINFORCING BARS	mm	6000		6000		—		6600		4200		—		—	
17586.18M	DRILLING HOLES IN EXISITING SUBSTRUCTURE	M	—		—		—		—		—		—		—	
16586.200125 M	DRILL AND GROUT ANCHOR BOLTS AND REBAR IN CONCRETE	EA	—		—		—		—		—		—		—	
16586.200216 M	DRILL AND GROUT ANCHOR BOLTS AND REBAR IN CONCRETE	EA	—		—		—		—		—		—		—	
587.01 M	BRIDGE RAILING REMOVAL AND DISPOSAL	M	—		—		—		—		—		—		—	
589.520001 M	REMOVAL OF EXISTING STEEL	EA	—		—		—		—		—		—		—	
589.520002 M	REMOVAL OF EXISTING STEEL	EA	—		—		—		—		—		—		—	
589.520003 M	REMOVAL OF EXISTING STEEL	EA	—		—		—		—		—		—		—	
589.520004 M	REMOVAL OF EXISTING STEEL	EA	—		—		—		—		—		—		—	
589.520005 M	REMOVAL OF EXISTING STEEL	EA	—		—		—		—		—		—		—	
590.01M	VERTICAL ADJUSTMENT OF BRIDGE DRAINAGE DEVICES	EA	—		—		—		—		—		—		—	
603.6001 M	REINFORCED CONCRETE PIPE CLASS III, 300 mm	M	—		—		—		—		—		—		—	
603.7301M	REINFORCED CONCRETE PIPE END SECTION 300 mm DIAMETER	EA	—		—		—		—		—		—		—	

ALL DIMENSIONS ARE IN m UNLESS OTHERWISE NOTED

AS BUILT REVISIONS

SIGNATURE DATE

SHEET 8 OF 12

ESTIMATE OF QUANTITIES

STATE OF NEW YORK
DEPARTMENT OF TRANSPORTATION

FILENAME	REGION	DATE	DRAWING NO.
305613J.1A	3	10/02	QE-38

DESIGN SUPERVISOR ____ JOB MANAGER ____ DESIGNED BY ____ ESTIMATED BY ____ DRAFTED BY ____ CHECKED BY ____ CHECKED BY ____

FED ROAD REG. NO.	STATE	CONTRACT NO.	SHEET NO.	TOTAL SHEETS
1	N.Y.	D259214	188	432

BRIDGE REHABILITATION PROJECT (ELEMENT SPECIFIC)
VARIOUS BRIDGES ON INTERSTATE 481
TOWNS OF DEWITT AND CICERO
ONONDAGA COUNTY
P.I.N. 305613 B.I.N. VARIOUS

ESTIMATE OF QUANTITIES BY STRUCTURE

ITEM #	DESCRIPTION	UNIT	1072781		1072782		1072791		1072792		1093510		1093520		1093540	
			EST.	FINAL	EST.	FINAL	EST.	FINAL	EST.	FINAL	EST.	FINAL	EST.	FINAL	EST.	FINAL
605.0901 M	UNDERDRAIN FILTER TYPE 1	CM	—		—		—		—		—		—		—	
605.1702 M	OPT. UNDERDRAIN PIPE 150 mm ø	M	—		—		—		—		—		—		—	
606.8701 M	CORRUGATED BEAM GUIDE RAILING TRANSITION ASSEMBLY, TWO RAIL, STEEL BRIDGE RAILING	EA	—		—		—		—		—		—		—	
16606.80 M	TRANSITION BRIDGE RAILING TO BOX BEAM GUIDE RAIL	M	—		—		—		—		—		—		—	
609.15 M	RESETTING EXISTING CURB	M	—		—		—		—		—		—		—	
610.0203 M	ESTABLISH TURF	SM	—		—		—		—		—		—		—	
612.0205 M	CLASS II TYPE B EROSION CONTROL MATERIAL	SM	—		—		—		—		—		—		—	
08615.0402 M	TREE AND VEGETATION BARRIER	M	—		—		—		—		—		—		—	
620.03 M	STONE FILLING (LIGHT)	CM	—		—		—		—		—		—		—	
625.01 M	SURVEY AND STAKEOUT	LS	—		—		—		—		—		—		—	
637.03 M	CONCRETE CYLINDER CURING BOX	EA	—		—		—		—		—		—		—	
637.0702 M	ENGINEER'S OFFICE TYPE C	MNTH	—		—		—		—		—		—		—	
10637.2101 M	FURN PORTABLE CELLULAR TELEPHONE EQUIP.	LS	—		—		—		—		—		—		—	
08637.3501 M	MICRO COMPUTER SYSTEM	EA	—		—		—		—		—		—		—	
15637.61 M	CPM SCHEDULE	LS	—		—		—		—		—		—		—	
15637.51 M	DIGITAL CAMERA SYSTEM	LS	—		—		—		—		—		—		—	
15637.91 M	CHAMPS MANAGEMENT SYSTEM	LS	—		—		—		—		—		—		—	
15637.98 M	PARTNERING WORKSHOP	LS	—		—		—		—		—		—		—	
640.10 M	WHITE PAINT REFLEC PAVEMENT STRIPES-0.38 mm	M	—		—		—		—		4		—		—	
640.11 M	YELLOW PAINT REFLEC PAVEMENT STRIPES-0.38 mm	M	—		—		—		—		3		—		—	
14646.10 M	MILLED IN AUDIBLE ROWAY DELINS (WIARD)	M	—		—		—		—		—		—		—	
23675.15M	FURNISH AND PLACE STONE BALLAST SURFACING COURSE	MT	—		—		—		—		—		—		—	
91685.0705 M	WHT POLYESTER REFLEC PAVEMENT STRIPE	M	—		—		—		—		4		—		—	
91685.0706 M	YEL POLYESTER REFLEC PAVEMENT STRIPE	M	—		—		—		—		3		—		—	
697.02 M	FIELD CHANGE ORDER	LS	—		—		—		—		—		—		—	
699.040001 M	MOBILIZATION	LS	NEC		NEC		NEC		NEC		NEC		NEC		NEC	

ALL DIMENSIONS ARE IN m UNLESS OTHERWISE NOTED

AS BUILT REVISIONS

SIGNATURE DATE

SHEET 9 OF 12

ESTIMATE OF QUANTITIES

STATE OF NEW YORK
DEPARTMENT OF TRANSPORTATION

FILENAME	REGION	DATE	DRAWING NO.
305613.L1A	3	10/02	QE-3C

DESIGN SUPERVISOR ____ JOB MANAGER ____ DESIGNED BY ____ ESTIMATED BY ____ DRAFTED BY ____ CHECKED BY ____ CHECKED BY ____

FED ROAD REG. NO.	STATE	CONTRACT NO.	SHEET NO.	TOTAL SHEETS
1	N.Y.	D259214	266	432

BRIDGE REHABILITION PROJECT (ELEMENT SPECIFIC)
VARIOUS BRIDGES ON INTERSTATE 481
TOWN OF DEWITT AND CICERO
ONONDAGA COUNTY
P.I.N. 305613 | B.I.N. 1072791 & 1072792

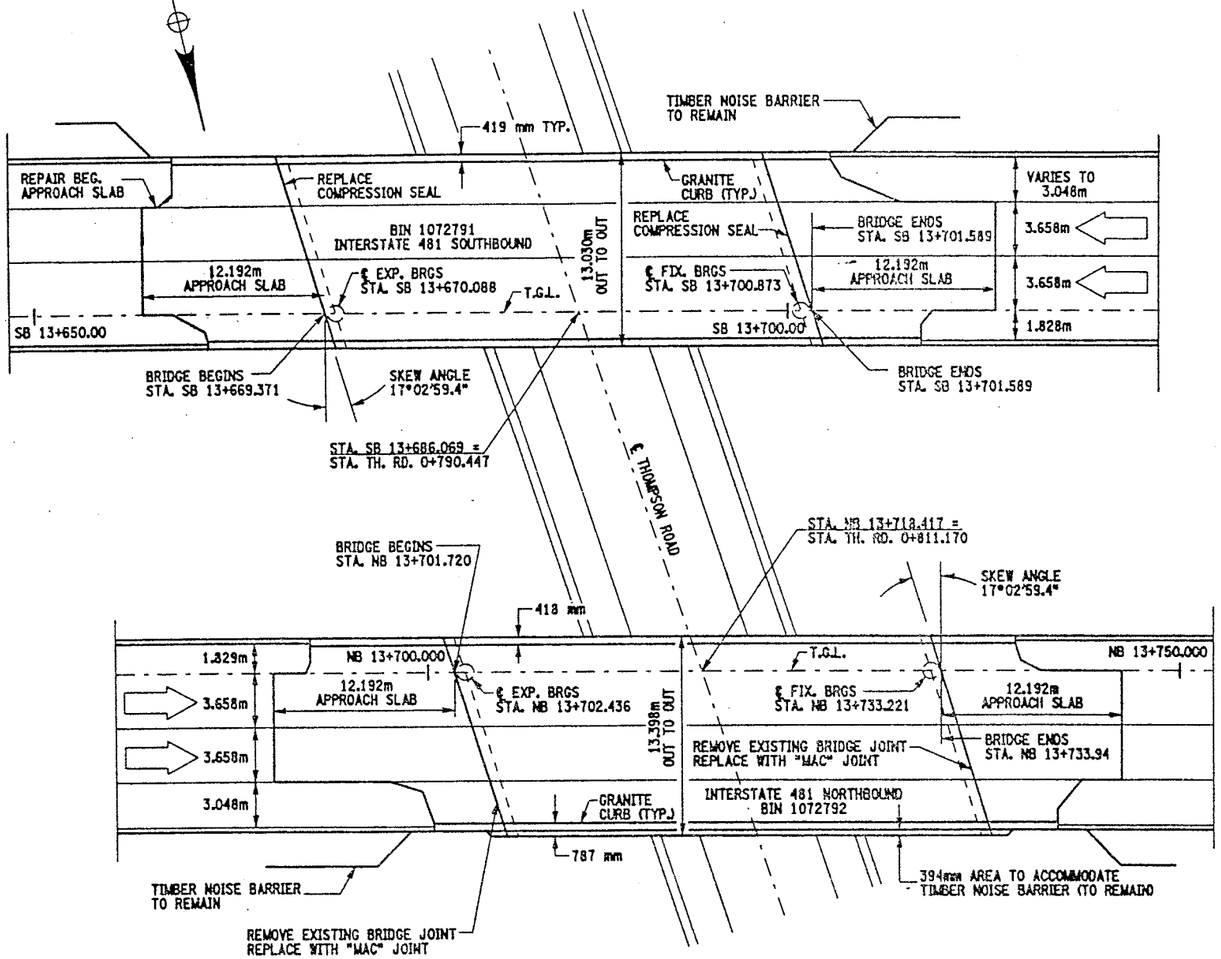

EXISTING PLAN VIEW
SCALE: 1:200

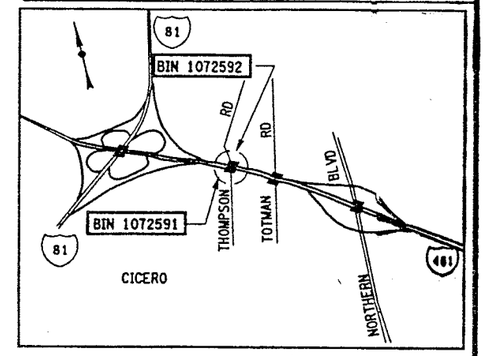

LOCATION MAP
NOT TO SCALE

WORK TO BE DONE (NOT NECESSARILY IN THIS ORDER)

BIN 1072791:

1. ESTABLISH MP&T SCHEME FOR STAGE CONSTRUCTION.
2. REPLACE COMPRESSION SEALS AT THE BRIDGE JOINTS.
3. REPAIR CONCRETE BEGINNING APPROACH SLAB. (SEE DWG. MS-2)
4. PERFORM BEARING RESTORATION OPERATIONS.
5. PERFORM MISCELLANEOUS REPAIRS TO CONCRETE ELEMENTS, BOTH ABUTMENTS.

BIN 1072792:

1. ESTABLISH MP&T SCHEME FOR STAGE CONSTRUCTION.
2. REMOVE EXISTING BRIDGE JOINTS.
3. PLACE NEW BRIDGE JOINTS, ("MAC" JOINTS).
4. PERFORM BEARING RESTORATION OPERATIONS.

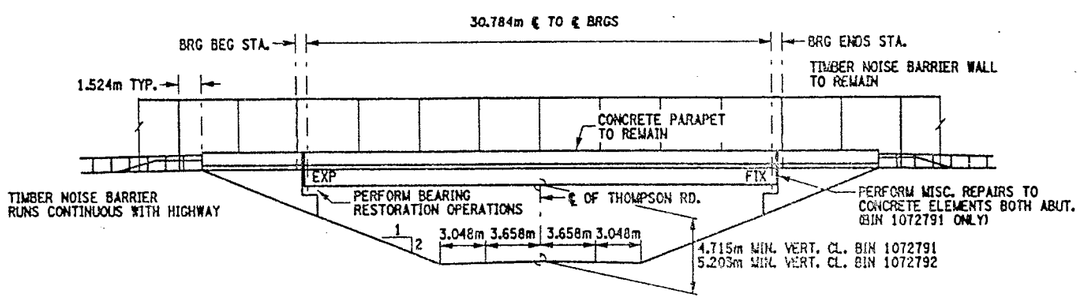

EXISTING ELEVATION VIEW
SCALE: 1:200

NOTE:

"MAC" JOINT - MODIFIED ARMORED JOINT SYSTEM WITH COMPRESSION SEAL.

BIN 1072791 SOUTHBOUND
BIN 1072792 NORTHBOUND

ALL DIMENSIONS ARE IN m UNLESS OTHERWISE NOTED

AS BUILT REVISIONS

SIGNATURE | DATE

INTERSTATE 481
OVER
THOMPSON ROAD

PLAN, ELEVATION AND BRIDGE SECTION

STATE OF NEW YORK
DEPARTMENT OF TRANSPORTATION

FILENAME	REGION	DATE	DRAWING NO.
305613AC.G1A	3	10/02	GP11-1

DESIGN SUPERVISOR ____ JOB MANAGER ____ DESIGNED BY ____ CHECKED BY ____ DRAFTED BY ____ CHECKED BY ____ ESTIMATED BY ____

FED ROAD REG. NO.	STATE	CONTRACT NO.	SHEET NO.	TOTAL SHEETS
1	N.Y.	D259214	267	432

BRIDGE REHABILITION PROJECT (ELEMENT SPECIFIC)
VARIOUS BRIDGES ON INTERSTATE 481
TOWN OF DEWITT AND CICERO
ONONDAGA COUNTY
P.I.N. 305613 B.I.N. 1072791 & 1072792

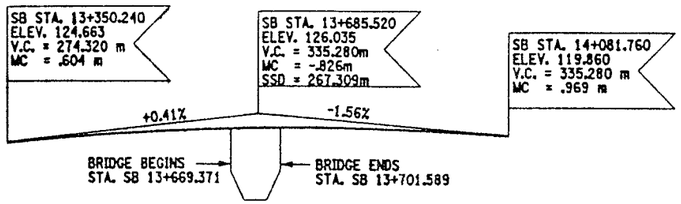

PROFILE
BIN 1072791 SB
NOT TO SCALE

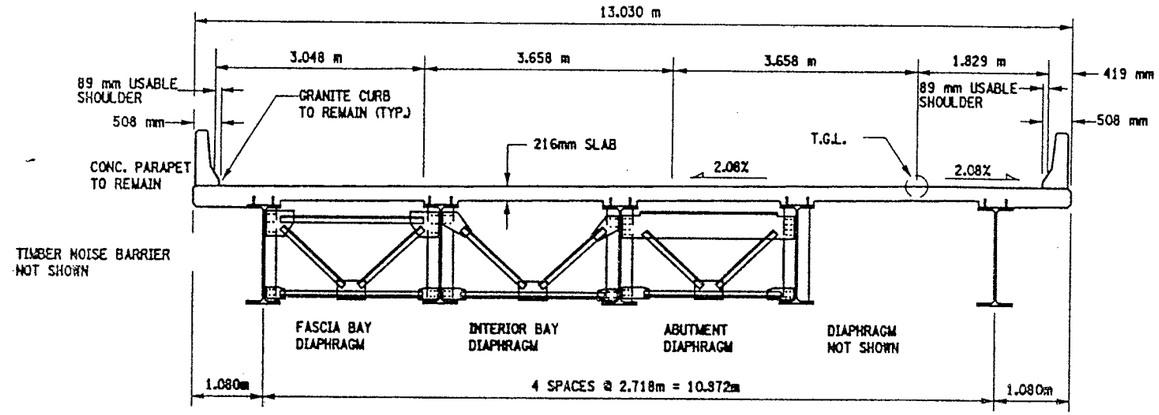

SECTION
NOT TO SCALE
BIN 1072791 SB

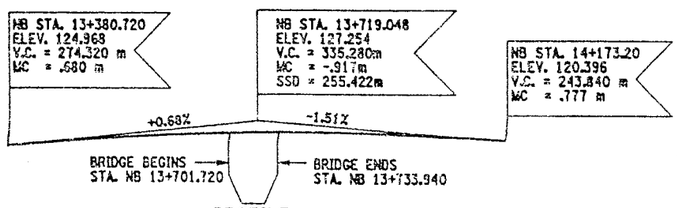

PROFILE
BIN 1072792 NB
NOT TO SCALE

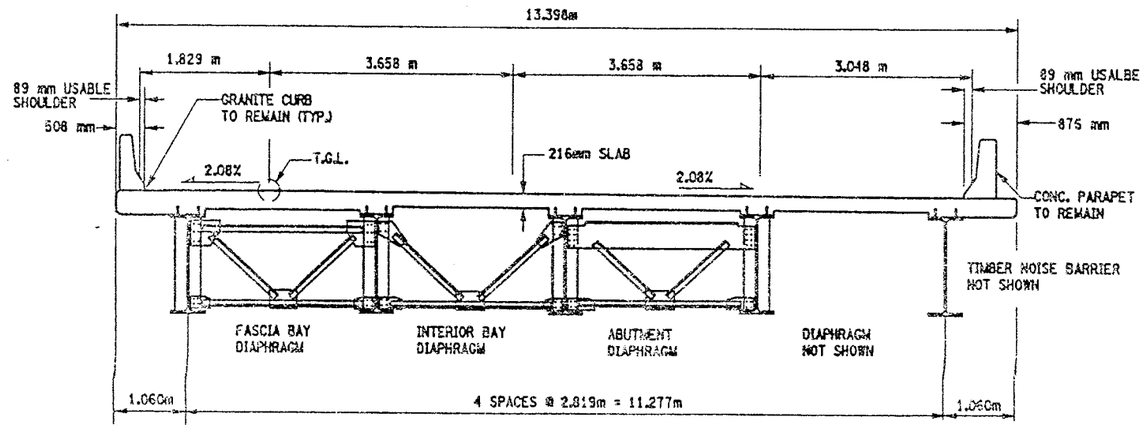

SECTION
NOT TO SCALE
BIN 1072792 NB

NOTES:

TIMBER NOISE BARRIER WALL IS ATTACHED TO NORTH FASCIA ON BIN 1072792 NB AND TO THE SOUTH FASCIA ON BIN 1072791 SB.

ALL DIMENSIONS ARE IN m UNLESS OTHERWISE NOTED

AS BUILT REVISIONS

SIGNATURE DATE

INTERSTATE 481
OVER
THOMPSON ROAD

TYPICAL BRIDGE SECTION AND PROFILE

STATE OF NEW YORK
DEPARTMENT OF TRANSPORTATION

FILENAME	REGION	DATE	DRAWING NO.
305613AC.G1A	3	10/02	TS11-1

DESIGN SUPERVISOR ____ JOB MANAGER ____ DESIGNED BY ____ ESTIMATED BY ____ CHECKED BY ____ DRAFTED BY ____ CHECKED BY ____

1072792

FED ROAD REG. NO.	STATE	CONTRACT NO.	SHEET NO.	TOTAL SHEETS
1	N.Y.	D259214	348	432

BRIDGE REHABILITATION PROJECT (ELEMENT SPECIFIC)
VARIOUS BRIDGES ON INTERSTATE 481
TOWNS OF DEWITT AND CICERO
ONONDAGA COUNTY
P.I.N. 305613 | B.I.N. 1072791 & 1072792

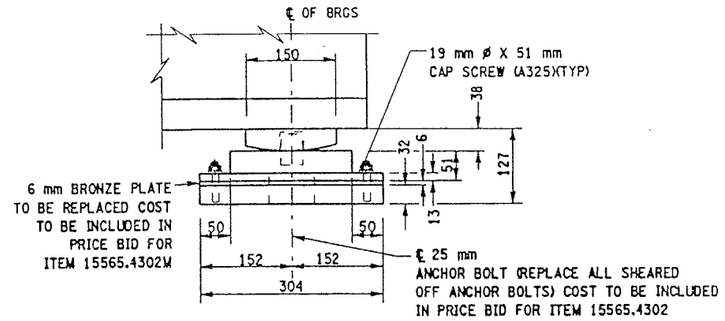

EXPANSION SIDE ELEVATION
SCALE: 1:10

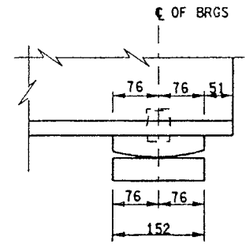

FIXED SIDE ELEVATION
NOT TO SCALE

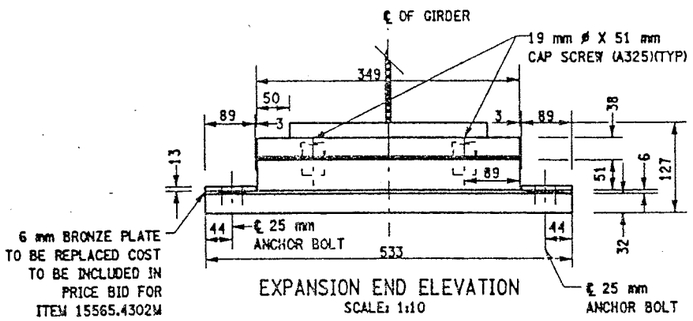

EXPANSION END ELEVATION
SCALE: 1:10

LOW STEEL EXPANSION BEARING DETAILS
BIN 1072791 - EAST ABUTMENT
BIN 1072792 - EAST ABUTMENT

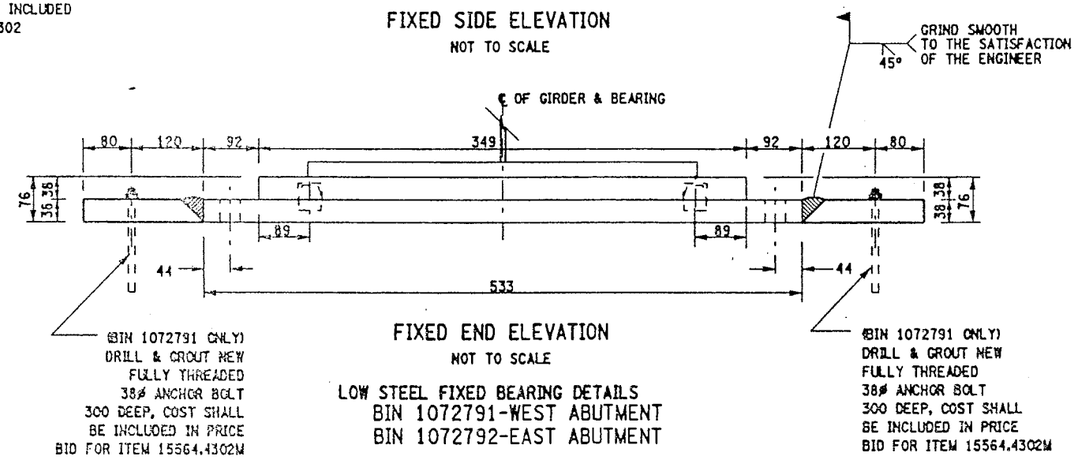

FIXED END ELEVATION
NOT TO SCALE

LOW STEEL FIXED BEARING DETAILS
BIN 1072791-WEST ABUTMENT
BIN 1072792-EAST ABUTMENT

BRIDGE BEARING RESTORATION NOTES:

1. BRIDGE BEARING RESTORATION ITEM 15565.4302M SHALL INCLUDE ALL DESIGNATED WORK AS PER THE SPECIFICATION.
2. STRUCTURAL LIFTING SHALL BE USED WITH ALL EXPANSION BEARING RESTORATION.
3. IF THE CONTRACTOR ELECTS TO LIFT ONLY ONE GIRDER AT A TIME PER SPAN (TO A MAXIMUM OF 3 mm TO REMOVE LOAD FROM BEARINGS), NO VEHICULAR TRAFFIC RESTRICTIONS WILL BE REQUIRED AS STATED IN SPECIFICATIONS SECTON 585-STRUCTURAL LIFTING OPERATIONS.
4. BEARING RESTORATION SHALL AS A MINIMUM, AND IN ALL CASES INCLUDE REPLACEMENT OF BRONZE PLATE.
5. FIXED BEARING TO BE CLEANED IN PLACE. DO NOT DISASSEMBLE.

JACKING NOTES:

THE METHOD OF LIFTING SHALL BE APPROVED BY THE DEPUTY CHEIF ENGINEER (STRUCTURES), DCES, TWO WEEKS PRIOR TO THE START OF THE WORK.

NO LIFTING WILL BE ALLOWED UNTIL ALL TEMPORARY SUPPORTS ARE SECURED.

WHEN POSSIBLE, THERE WILL BE NO LIVE LOAD DURING LIFTING.

LIFTING SHALL BE CONFINED TO ONE END OF A SPAN AT ANY ONE TIME.

IF THE CONTRACTOR ELECTS TO LIFT ONLY ONE GIRDER AT A TIME PER PIER (TO A MAXIMUM OF 3 mm TO REMOVE LOAD FROM BEARING), NO VEHICULAR TRAFFIC RESTRICTIONS WILL BE REQUIRED AS STATED IN THE SPECIFICATION SECTION 585-STRUCTURAL LIFTING OPERATIONS.

ALL MATERIALS ASTM A588
EXCEPT AS NOTED

LIST OF ITEMS USED:

ITEM 15565.4302 M - BRIDGE BEARING RESTORATION (EA)
ITEM 585.01M - STRUCTURAL LIFTING (TYPE A) (EA)

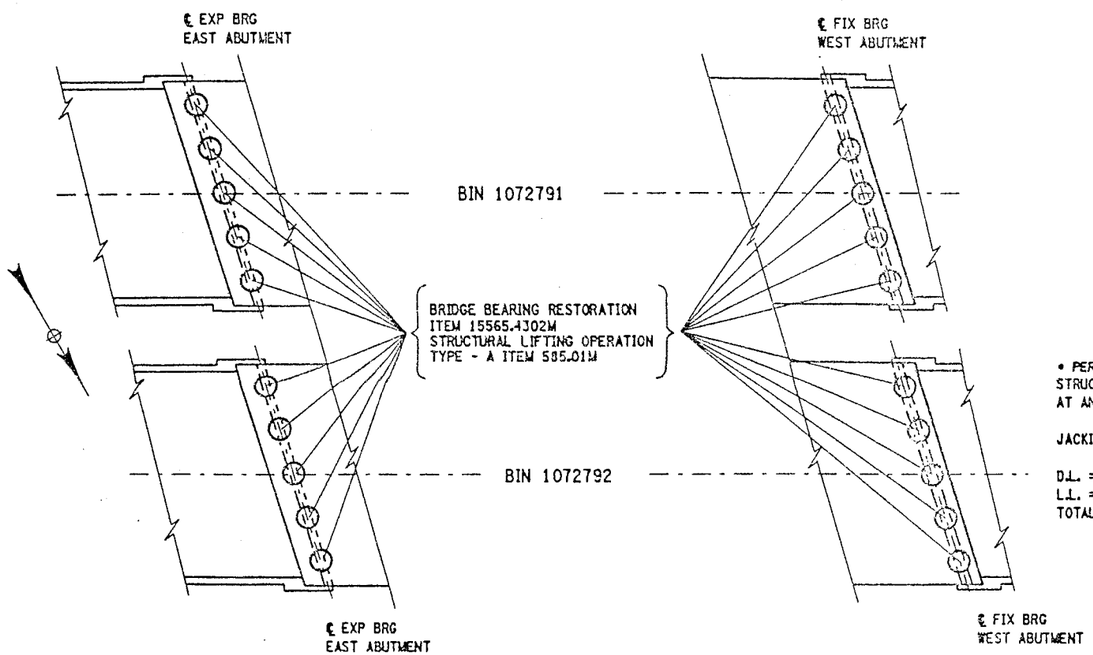

BRIDGE PLAN SCHEMATIC
NOT TO SCALE

• *PERFORM STRUCTURAL LIFTING UNDER ITEM 585.01M* - STRUCTURAL LIFTING OPERATIONS - TYPE A (LIFTING AT AN ABUTMENT).

JACKING LOADS:

D.L. = 50 MT
L.L. = 50 MT
TOTAL = 1000 MT

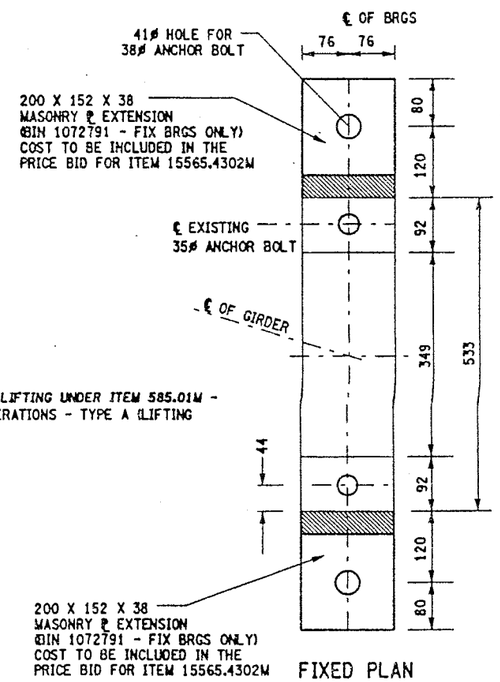

FIXED PLAN
BIN 1072791
ONLY

ALL DIMENSIONS ARE IN mm UNLESS OTHERWISE NOTED

AS BUILT REVISIONS

SIGNATURE | DATE

INTERSTATE 481 SB & NB
OVER
THOMPSON ROAD

BEARING RESTORATION DETAILS

STATE OF NEW YORK
DEPARTMENT OF TRANSPORTATION

FILENAME	REGION	DATE	DRAWING NO.
305613ZZJM1A	3	10/02	BR-8

CHECKED BY
DRAFTED BY
ESTIMATED BY
CHECKED BY
DESIGNED BY
JOB MANAGER
DESIGN SUPERVISOR

FED ROAD REG. NO.	STATE	CONTRACT NO.	SHEET NO.	TOTAL SHEETS
1	N.Y.	D259214	362	432

BRIDGE REHABILITATION PROJECT (ELEMENT SPECIFIC)
VARIOUS BRIDGES ON INTERSTATE 481
TOWNS OF DEWITT AND CICERO
ONONDAGA COUNTY
P.I.N. 305613 | B.I.N. ALL BINS

BRIDGE JOINT TABLE

B.I.N. NUMBER	JOINT LOCATION	JOINT SKEW	SPAN(S) LENGTH FOR JOINT (METERS)	JOINT BEND LOCAT'N RT	JOINT BEND LOCAT'N LT	EXISTING JOINT TYPE	PROPOSED JOINT TYPE	CURB TO CURB DISTANCE (METERS) (SEE NOTES)	FASCIA & MEDIAN LENGTH (METERS) LT/RT	TOTAL LENGTH (METERS)	JOINT ITEM NUMBER(S)	DRAWING NUMBER SECT VIEW	DRAWING NUMBER PLAN VIEW	DRAWING NUMBER FASCIA DETAIL
1072530	EAST ABUT.	0°-00'-00"	33.528	N	N	ACJ	MAC-5	15.850	.457/.457	16.764	567.35M	JD-30	JD-29	JD-30
	WEST ABUT.	0°-00'-00"	37.795	N	N	ACJ	MAC-5	15.850	.457/.457	16.764	567.35M	JD-30	JD-29	JD-30
1072571	SOUTH ABUT.	20°-29'-45.2"	44.196	N	N	ACJ	MAC-6	14.481	.488/.488	15.457	567.36M	JD-32	JD-31	JD-32
	NORTH ABUT.	20°-29'-45.2"	——	N	N	ACJ	MAC-1	15.456	.488/.488	16.428	567.31M	JD-32	JD-31	JD-32
1072572	SOUTH ABUT.	21°-09'-2.1"	44.196	N	N	ACJ	MAC-6	12.746	.490/.490	13.726	567.36M	JD-34	JD-33	JD-34
	NORTH ABUT.	21°-09'-2.1"	——	N	N	ACJ	MAC-1	12.746	.490/.490	13.726	567.31M	JD-34	JD-33	JD-34
1072581	SOUTH ABUT.	3°59'-27.5"	37.033	N	N	ACJ	MAC-5	11.917	.458/.458	12.833	567.35M	JD-36	JD-35	JD-36
	NORTH ABUT.	3°-59'-27.5"	——	N	N	ACJ	MAC-1	11.917	.458/.458	12.833	567.31M	JD-36	JD-35	JD-36
1072582	SOUTH ABUT.	3°-51'-57.9"	37.033	N	N	ACJ	MAC-5	11.915	.458/.458	12.831	567.35M	JD-38	JD-37	JD-38
	NORTH ABUT.	3°-51'-57.9"	——	N	N	ACJ	MAC-1	11.915	.458/.458	12.831	567.31M	JD-38	JD-37	JD-38
1072781	EAST ABUT.	16°-26'-24"	——	N	N	ACJ	MAC-1	12.500	.530/.530	13.560	567.31M	JD-40	JD-39	JD-40
	WEST ABUT.	16°-26'-24"	33.635	N	N	ACJ	MAC-5	12.500	.530/.530	13.560	567.35M	JD-40	JD-39	JD-40
1072782	EAST ABUT.	16°-26'-24"	——	N	N	ACJ	MAC-1	13.183	.530/.530	14.243	567.31M	JD-42	JD-41	JD-42
	WEST ABUT.	16°-26'-24"	31.394	N	N	ACJ	MAC-5	12.589	.530/.530	13.649	567.35M	JD-42	JD-41	JD-42
1072791	EAST ABUT.	17°-02'-59.4"	30.785	N	N	ACJ	RCS	12.566	.531/.531	13.628	16567.64M	JD-47	JD-43	JD-47
	WEST ABUT.	17°-02'-59.4"	——	N	N	ACJ	RCS	12.566	.531/.531	13.628	16567.64M	JD-47	JD-43	JD-47
1072792	EAST ABUT.	17°-02'-59.4"	30.785	N	N	ACJ	MAC-5	12.566	.530/.530	14.015	567.35M	JD-44	JD-43	JD-44
	WEST ABUT.	17°-02'-59.4"	——	N	N	ACJ	MAC-1	12.566	.530/.530	14.015	567.31M	JD-44	JD-43	JD-44
1093510	WEST ABUT.	44°-07'-00"	——	N	N	ACJ/ADA	RCS	16.560	.637/.637	17.834	16567.64M	JD-46	JD-45	JD-46
	EAST ABUT.	40°-26'-00"	37.522	N	N	ADA	RADA	15.620	——	15.620	——	JD-46	JD-45	——

LEGEND

EXISTING JOINT TYPE:

ACJ = ARMORED COMPRESSION JOINT SYSTEM
MOD = MODULAR JOINT SYSTEM
MAC = MODIFIED ARMORED COMPRESSION SYSTEM (NO HORIZ. ARMORING ANGLE)
ADA = ARMORED DECK ANGLE
SS = STRIP SEAL JOINT
OPEN = OPEN JOINT

PROPOSED JOINT TYPE:

MAC-1 = MOD. ARM./COMP. SEAL JT. SYS. (A-1)
MAC-2 = MOD. ARM./COMP. SEAL JT. SYS. (A-2)
MAC-5 = MOD. ARM./COMP. SEAL JT. SYS. (A-5)
MAC-6 = MOD. ARM./COMP. SEAL JT. SYS. (A-6)
RCS = REPLACE EXISTING COMPRESSION SEAL
RADA = REMOVE ARMOR DECK ANGLE
MOD-1 = MODULAR JT. SYS. (ONE-CELL)
MOD-2 = MODULAR JT. SYS. (TWO-CELL)

JOINT BEND LOCATION:

N = NO BENDS
CRB = CURB LINE
PAV'T = PAVEMENT

GENERAL NOTES:

- ALL MEASUREMENTS SHALL BE FIELD VERIFIED.
- CURB TO CURB LENGTHS ARE MEASURED ALONG ℄ OF JOINT.
- MULTIPLE DIMENSIONS ARE SHOWN LOOKING UP-STATION, LEFT TO RIGHT.
- ALL DIMENSIONS ARE SHOWN IN METERS.

INFORMATIONAL NOTES:

BIN 1072530 - NO JOINT AT PIER.

BIN 1072791 - REPLACE COMPRESSION SEALS
BEG. ABUT. (EAST), TYPE A-5
END ABUT. (WEST), TYPE A-1

FOR JOINT DETAILS REFER TO THE FOLLOWING DRAWINGS:

DWG. NO. JD-1 - MODIFIED ARMORED COMPRESSION SEAL JOINT SYSTEM.
DWG. NO. JD-24 - ONE-CELL MODULAR JOINT SYSTEM.
DWG. NO. JD-25 - TWO-CELL MODULAR JOINT SYSTEM.

LIST OF BRIDGE JOINT ITEMS USED:

ITEM 566.01M - MODULAR EXP. JOINT SYSTEM ONE-CELL (M)
ITEM 566.02M - MODULAR EXP. JOINT SYSTEM TWO-CELL (M)
ITEM 567.31M - MODIFIED ARMORED JOINT SYSTEM W/ COMP. SEAL TYPE A1 (m)
ITEM 567.32M - MODIFIED ARMORED JOINT SYSTEM W/ COMP. SEAL TYPE A2 (m)
ITEM 567.35M - MODIFIED ARMORED JOINT SYSTEM W/ COMP. SEAL TYPE A5 (m)
ITEM 567.36M - MODIFIED ARMORED JOINT SYSTEM W/ COMP. SEAL TYPE A6 (m)
ITEM 16567.640001M - REPLACE COMPRESSION SEAL FOR EXISTING BRDGE JOINTS (m)

ALL DIMENSIONS ARE IN m UNLESS OTHERWISE NOTED

AS BUILT REVISIONS

SIGNATURE DATE

INTERSTATE 481 VARIOUS BRIDGES

BRIDGE JOINT TABLE

STATE OF NEW YORK
DEPARTMENT OF TRANSPORTATION

FILENAME	REGION	DATE	DRAWING NO.
305613AJJA1	3	10/02	JT-2

CHECKED BY
DRAFTED BY
ESTIMATED BY
CHECKED BY
DESIGNED BY
JOB MANAGER
DESIGN SUPERVISOR

FED ROAD REG. NO.	STATE	CONTRACT NO.	SHEET NO.	TOTAL SHEETS
1	N.Y.	D259214	365	432

BRIDGE REHABILITATION PROJECT (ELEMENT SPECIFIC)
VARIOUS BRIDGES ON INTERSTATE 481
TOWNS OF DEWITT AND CICERO
ONONDAGA COUNTY
P.I.N. 305613 B.I.N. ALL BIN'S

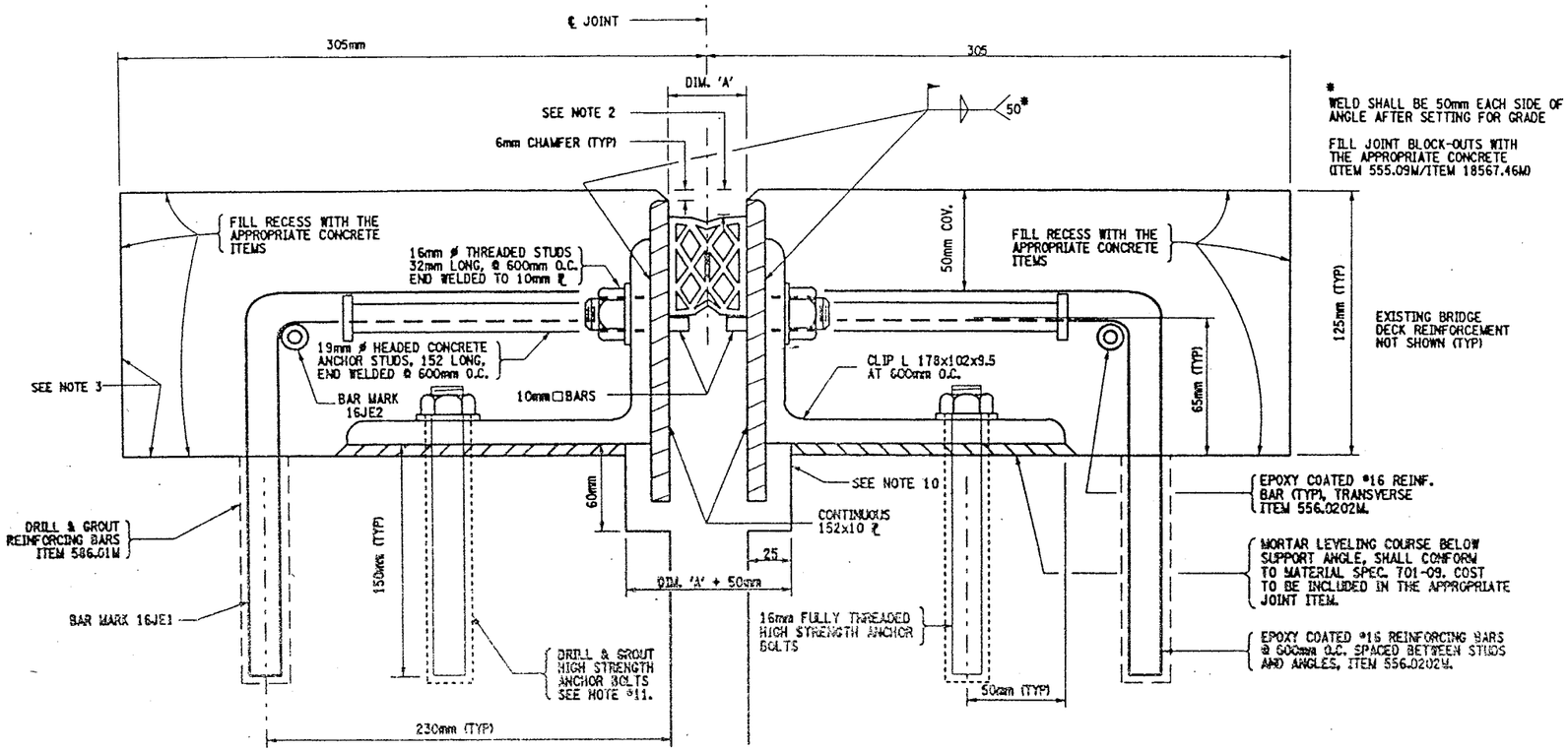

* WELD SHALL BE 50mm EACH SIDE OF ANGLE AFTER SETTING FOR GRADE

FILL JOINT BLOCK-OUTS WITH THE APPROPRIATE CONCRETE (ITEM 555.09M/ITEM 18567.46M)

MODIFIED ARMORED COMPRESSION JOINT DETAIL

FOR INSTALLATION LOCATIONS SEE JOINT TABLE

NOT TO SCALE

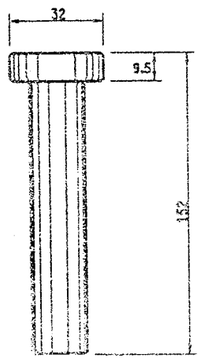

DETAIL OF HEADED CONCRETE ANCHOR STUD

NOT TO SCALE

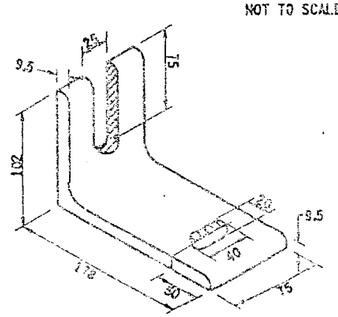

DETAIL OF CLIP ANGLE

NOT TO SCALE

NOTE:

ALL CUTTING TO BE DONE WITH A COPING SAW, SOAP AND WATER

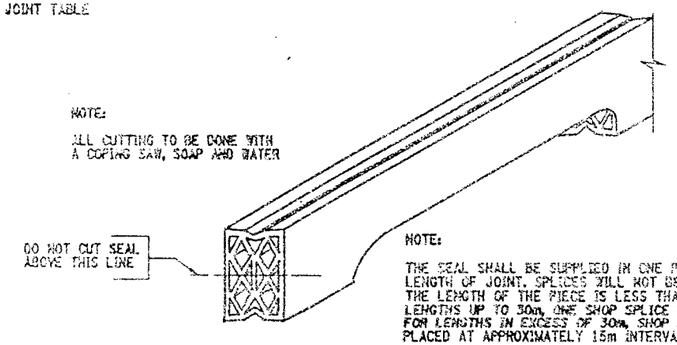

NOTE:

THE SEAL SHALL BE SUPPLIED IN ONE PIECE FOR THE FULL LENGTH OF JOINT. SPLICES WILL NOT BE PERMITTED WHEN THE LENGTH OF THE PIECE IS LESS THAN 15m. FOR LENGTHS UP TO 30m, ONE SHOP SPLICE WILL BE PERMITTED. FOR LENGTHS IN EXCESS OF 30m, SHOP SPLICES MAY BE PLACED AT APPROXIMATELY 15m INTERVALS.

DETAIL FOR CUTTING SEAL

NOT TO SCALE

GENERAL NOTES:

1. THE TEMPERATURE OF THE BRIDGE MUST BE TAKEN ON THE STRUCTURAL STEEL SURFACE TO DETERMINE THE TEMPERATURE CORRECTION FOR THE JOINT OPENINGS.
2. THIS DEPTH SHALL BE INDICATED ON THE SHOP DRAWINGS AND SHALL BE SUCH THAT WHEN THE SEAL IS COMPRESSED TO 50% OF ITS NORMAL WIDTH, THE TOP OF THE SEAL SHALL BE NOT LESS THAN 6mm NOR MORE THAN 19mm BELOW THE TOP OF THE ROADWAY.
3. RECESSES RECEIVING ITEM 555.09M. AFTER SURFACE PREPARATION, THOROUGHLY WET THE CONCRETE SURFACE AND ALL POROUS SURFACES TO BE IN CONTACT WITH NEW CONCRETE, FOR 12 HOURS. NOTE THE USE OF MATERIAL SPECIF. 705-22 PORTLAND CEMENT MORTAR BONDING GROUT HAS BEEN ELIMINATED, SEE INSERT IN PROJECT PROPOSAL.
4. A WATER-TIGHT INTEGRITY TEST SHALL BE PERFORMED BY THE CONTRACTOR AT ALL COMPRESSION SEAL JOINT INSTALLATIONS. THE FOLLOWING TEST PARAMETERS SHALL BE INCORPORATED IN THE TEST:
   1. A 15 MINUTE MINIMUM PERIOD OF STANDING WATER, WITH A 25mm MINIMUM DEPTH SHALL BE USED.
   2. IN ADDITION, IN LOCATIONS OF COPED AREAS OF THE SEAL, BENDS, ETC., WATER PRESSURE SHALL BE APPLIED, TO THE SATISFACTION OF THE E.I.C FOR A 15 MINUTE PERIOD.
   3. LIMITS OF TEST AREA SHALL BE FROM FACE OF CURB TO FACE OF CURB ON THE DECK SURFACE.
5. NO PAYMENT WILL BE MADE TO THE CONTRACTOR FOR THE JOINT IF, IN THE OPINION OF THE ENGINEER, THE INSTALLED JOINT LEAKS WITHIN THE 15 MINUTE TEST PERIOD.
6. PRIOR TO THE START OF WORK AT EACH JOINT, THE CONTRACTOR SHALL SUBMIT A WRITTEN PLAN FOR THE SPECIFICS OF THE TESTING, INCLUDING CONTAINMENT OF THE WATER AND THE METHOD TO BE USED FOR ACCESS BY THE E.I.C. TO THE BOTTOM OF THE JOINT BEING TESTED.
7. THE COST OF ALL LABOR, EQUIPMENT AND MATERIALS REQUIRED FOR THE TESTING WHICH INCLUDES, BUT IS NOT LIMITED TO:
   1. A CONTAINMENT SYSTEM FOR THE TEST WATER.
   2. PROVISIONS FOR E.I.C. ACCESS TO THE BOTTOM OF THE JOINT.

   SHALL BE INCLUDED IN THE PRICE BID FOR THE RESPECTIVE JOINT ITEMS.
8. THE COST OF ALL LABOR, EQUIPMENT, AND MATERIALS TO INSTALL THE NEW JOINT SHALL BE INCLUDED IN THE UNIT PRICE BID FOR THE APPROPRIATE JOINT ITEM.
9. MORTAR LEVELING COURSE SHALL CONFORM TO MATERIAL SPECIFICATION 701-09 AND SHALL BE INCLUDED IN THE PRICE BID FOR THE APPROPRIATE JOINT ITEM.
10. THE DIMENSIONS OF THE REMOVAL AREA UNDER THE 152x10 PLATES ARE SHOWN TO ALLOW SPACE FOR THE PLATES TO REST FREELY. IF THERE IS ALREADY ADEQUATE SPACE, NO CONCRETE REMOVAL OR REPLACEMENT IS REQUIRED IN THIS AREA.
11. 16 mm ø ASTM A325M ANCHOR BOLT TO BE DRILLED AND GROUTED IN PLACE IN ACCORDANCE WITH THE REQUIREMENTS OF SUB-SECTION 586-3.02. GROUTING MATERIALS SHALL BE IN ACCORDANCE WITH MATERIALS SUB-SECTION 701-07 ANCHORING MATERIALS-CHEMICALLY CURING. HOLES TO BE DRILLED TO THE DIAMETER AND DEPTH RECOMMENDED BY THE MANUFACTURER OF THE GROUTING MATERIAL (MIN. DEPTH OF 150 mm). THE COST OF THE ANCHORS, INCLUDING DRILLING AND GROUTING, SHALL BE INCLUDED IN THE UNIT PRICE BID FOR THE APPROPRIATE JOINT SYSTEM ITEM.
12. IT IS DESIRABLE TO HAVE THE ARMORED JOINT WITH ITS COMPRESSION SEAL ASSEMBLED IN THE SHOP AND DELIVERED TO THE JOB SITE ALL SET FOR INSTALLATION IN ITS PREFORMED RECESS IN THE STRUCTURAL SLAB. IN CASES WHERE THE ARMORED JOINT CANNOT BE ASSEMBLED IN THE SHOP, DUE TO ITS EXCESSIVE LENGTH CAUSING SHIPPING PROBLEMS, THE JOINT SHALL BE SEALED WITH THE COMPRESSION SEAL BEFORE THE STRUCTURE IS OPENED TO TRAFFIC INCLUDING CONSTRUCTION TRAFFIC, AND BEFORE DIS CONTINUING OPERATIONS WHEN WORK IS SUSPENDED DURING THE WINTER.

ALL DIMENSIONS ARE IN mm UNLESS OTHERWISE NOTED

EPOXY POLYSULFIDE GROUT NOTE:

CONTRACTOR MAY WITH THE APPROVAL OF THE ENGINEER USE MATERIAL SPECIFICATION 721-03 EPOXY POLYSULFIDE GROUT, AT THE RECESSES. INSTEAD OF THE 12 HOUR CONTINUOUS PREWETTING REQUIREMENTS (PROJECT PROPOSAL). CONTRACTOR MUST ENSURE PROPER CONSTRUCTION PRACTICES ARE FOLLOWED WHEN USING THIS GROUT. THE USE OF EPOXY POLYSULFIDE GROUT SHALL BE AT NO ADDITIONAL COST TO THE STATE.

SEALS (mm)			ARMORED JOINT SYSTEM	
TYPE	NOMINAL WIDTH	DIM. "A" @ 20°C.	TYPE	END CONDITION
1	44	25	A1	Fixed End Only
2	51	30	A2	Exp. up to 18 m
3	64	38	A3	Exp. over 18 m to 23 m
4	76	44	A4	Exp. over 23 m to 27 m
5	89	52	A5	Exp. over 27 m to 38 m
6	102	60	A6	Exp. over 38 m to 46 m

Maximum Skew Limits: Fixed End - No Limit
Exp. End - 45° A2 thru A6

LIST OF ITEMS USED:

ITEM 555.09M - STRUCT. CONCRETE, CLASS "HP" (CM)
ITEM 556.0202M - EPOXY COATED BAR REINF. FOR STRUCT. (Kg)
ITEM 567.31M - MOD. ARMORED JOINT SYSTEM W/ COMP. SEAL TYPE A1 (m)
ITEM 567.32M - MOD. ARMORED JOINT SYSTEM W/ COMP. SEAL TYPE A2 (m)
ITEM 567.35M - MOD. ARMORED JOINT SYSTEM W/ COMP. SEAL TYPE A5 (m)
ITEM 567.36M - MOD. ARMORED JOINT SYSTEM W/ COMP. SEAL TYPE A6 (m)
ITEM 18567.46M - ELASTOMERIC CONC. FOR BRIDGE JT. SYSTEMS (M)
ITEM 586.01M - DRILL & GROUT REINF. BARS (mm)

AS BUILT REVISIONS

SIGNATURE DATE

INTERSTATE 481

COMPRESSION SEAL JOINT DETAILS

STATE OF NEW YORK
DEPARTMENT OF TRANSPORTATION

FILENAME	REGION	DATE	DRAWING
305613AJJA1	3	10/02	

CHECKED BY
DRAFTED BY
ESTIMATED BY
CHECKED BY
DESIGNED BY
JOB MANAGER
DESIGN SUPERVISOR

FED ROAD REG. NO.	STATE	CONTRACT NO.	SHEET NO.	TOTAL SHEETS
1	N.Y.	D259214	407	432

BRIDGE REHABILITATION PROJECT (ELEMENT SPECIFIC)
VARIOUS BRIDGES ON INTERSTATE 481
TOWNS OF DEWITT AND CICERO
ONONDAGA COUNTY
P.I.N. 305613 B.I.N. 1072792

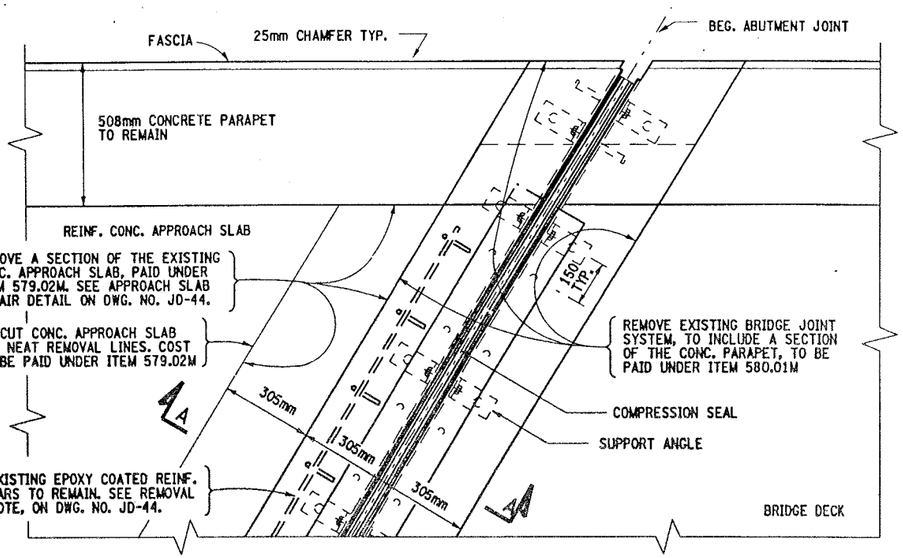

EXISTING ABUTMENT JOINT PLAN VIEW

BIN 1072792 - BEG. ABUT. (EAST ABUT.) SHOWN
END ABUT. (WEST ABUT.) SIMILAR

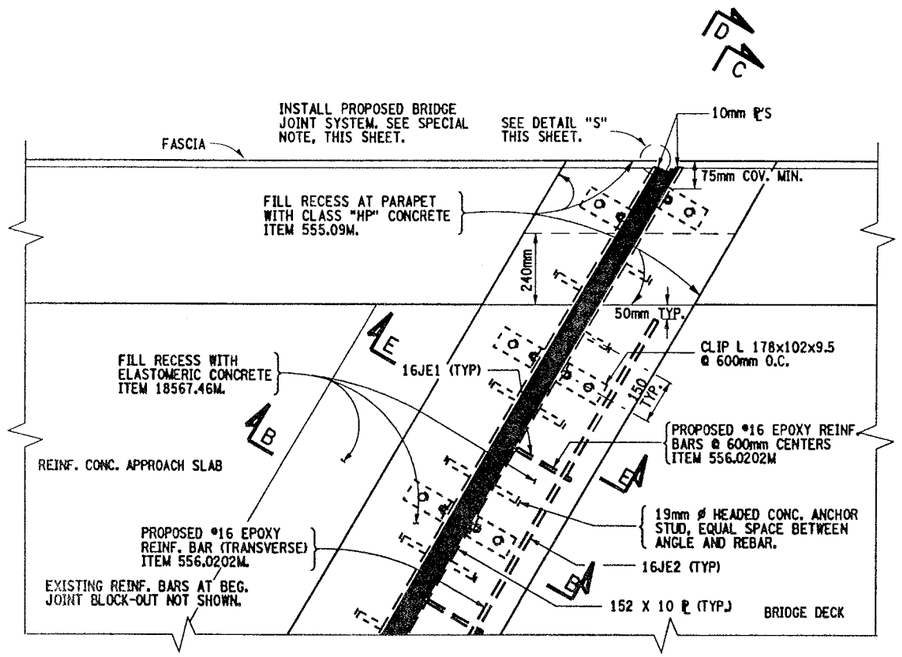

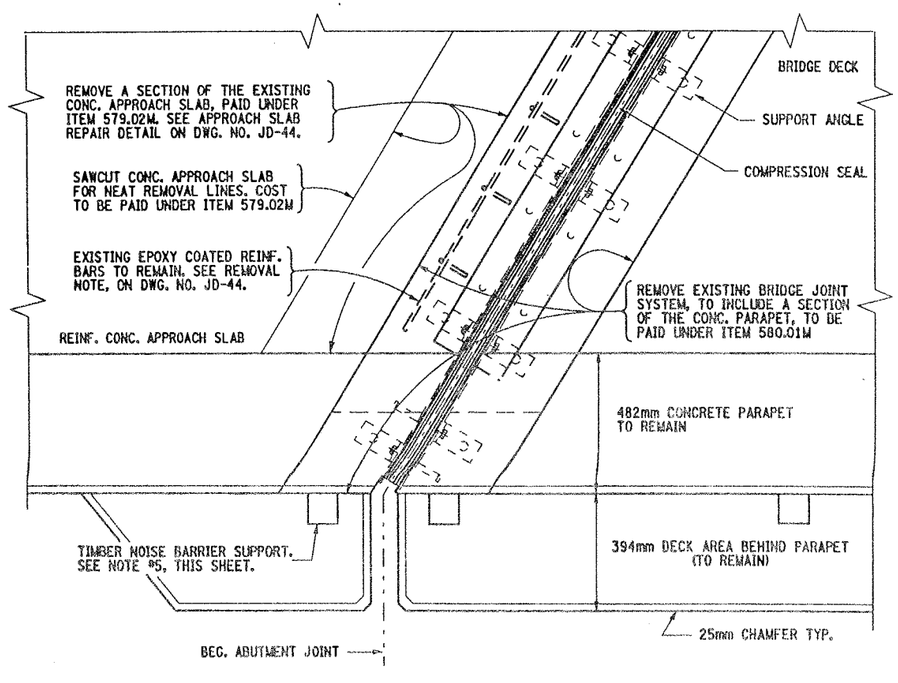

EXISTING ABUTMENT JOINT PLAN VIEW

BIN 1072792 - BEG. ABUT. (EAST ABUT.) SHOWN
END ABUT. (WEST ABUT.) SIMILAR

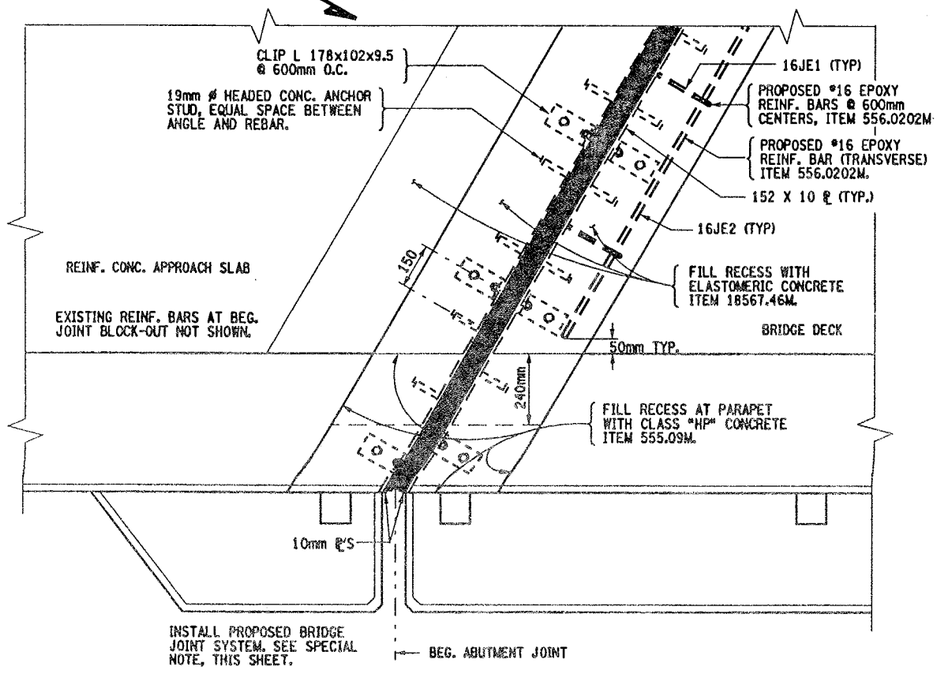

PROPOSED ABUTMENT JOINT PLAN VIEW

BIN 1072792 - BEG. ABUT. (EAST ABUT.) SHOWN
END ABUT. (WEST ABUT.) SIMILAR

NOTES:

1. REFER TO DWG. NO. JD-1 FOR PROPOSED JOINT DETAILS AND ALL NOTES SHALL APPLY.
2. FOR SECTION VIEWS SEE DWG. NO. JD-44.
3. REFER TO DWG. NO. JT-2 FOR PROPOSED BRIDGE JOINT INSTALLATION LOCATIONS.
4. BOTH STRUCTURES HAVE A 17°-02'-59.4" SKEW ANGLE.
5. BIN 1072792 NB - HAS A TIMBER NOISE BARRIER ATTACHED TO THE NORTH FASCIA (LEFT SIDE), THIS TIMBER NOISE BARRIER TO REMAIN. IT MAY BE NECESSARY TO TEMPORARILY REMOVE THE SUPPORT BRACKETS TO FACILITATE INSTALLATION OF THE PROPOSED BRIDGE JOINT.

   ANY ADDITIONAL SUPPORT TO THE TIMBER NOISE BARRIER DEEMED NECESSARY BY THE ENGINEER, DURING THIS REMOVAL OF THE SUPPORT BRACKETS SHALL BE INCLUDED IN THE PRICE BID FOR ITEM 580.01M.
6. BIN 1072792 - 481 NB/THOMPSON RD.
   BRIDGE JOINT REPAIRS/REPLACEMENT SHALL BE CONDUCTED UTILIZING NIGHT-TIME CONSTRUCTION TECHNIQUES FOR THIS BRIDGE ONLY. WHEN EVER THE JOINT BLOCK-OUT CONCRETE IS REMOVED OR CURING. STEEL ROAD PLATES SHALL BE USED. REFER TO DWG. NO. AA-RP1 FOR ROAD PLATE DETAILS.
7. SEE DRAWING NO. JD-47 FOR BIN 1072791 DETAILS.
   @BIN 1072792 SHOWN, BIN 1072791 SIMILAR)

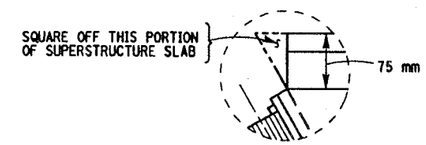

DETAIL "S"
NOT TO SCALE

SPECIAL NOTE:

BIN 1072792 - INSTALL ITEM 567.35M AT BEG. ABUT. JOINT
INSTALL ITEM 567.31M AT END ABUT. JOINT.

ITEMS USED:

ITEM 556.0202M	- EPOXY-COATED BAR REINF. FOR STRUCT. (Kg)
ITEM 555.09M	- STRUCT. CONCRETE, CLASS "HP" (CM)
ITEM 567.31M	- MOD. ARMORED JOINT SYSTEM W/COMP. SEAL TYPE A1 (M)
ITEM 567.35M	- MOD. ARMORED JOINT SYSTEM W/COMP. SEAL TYPE A5 (M)
ITEM 18567.46M	- ELASTOMERIC CONCRETE FOR BRIDGE JOINT SYSTEMS (M)
ITEM 579.02M	- REINFORCED BAR EXPOSURE (SM)
ITEM 580.01M	- REMOVAL OF STRUCT. CONCRETE (CM)

ALL DIMENSIONS ARE IN mm UNLESS OTHERWISE NOTED

AS BUILT REVISIONS

SIGNATURE DATE

INTERSTATE 481 NB
OVER
THOMPSON ROAD

BRIDGE JOINT DETAILS

STATE OF NEW YORK
DEPARTMENT OF TRANSPORTATION

FILENAME	REGION	DATE	DRAWING NO.
305613AJJA1	3	10/02	JD-43

DESIGN SUPERVISOR ____ JOB MANAGER ____ DESIGNED BY ____ CHECKED BY ____ DRAFTED BY ____ CHECKED BY ____ ESTIMATED BY ____

FED ROAD REG. NO.	STATE	CONTRACT NO.	SHEET NO.	TOTAL SHEETS
1	N.Y.	D259214	408	432

BRIDGE REHABILITATION PROJECT (ELEMENT SPECIFIC)
VARIOUS BRIDGES ON INTERSTATE 481
TOWNS OF DEWITT AND CICERO
ONONDAGA COUNTY
P.I.N. 305613 B.I.N. 1072792

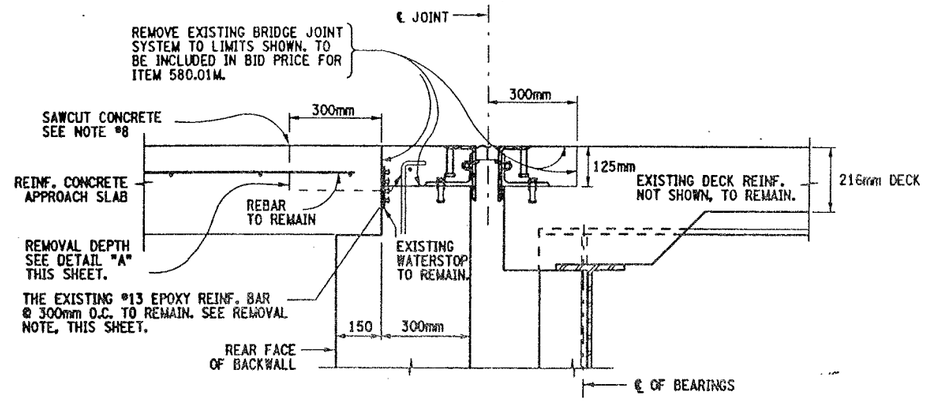

SECTION A-A
EXISTING ABUTMENT JOINT
NOT TO SCALE

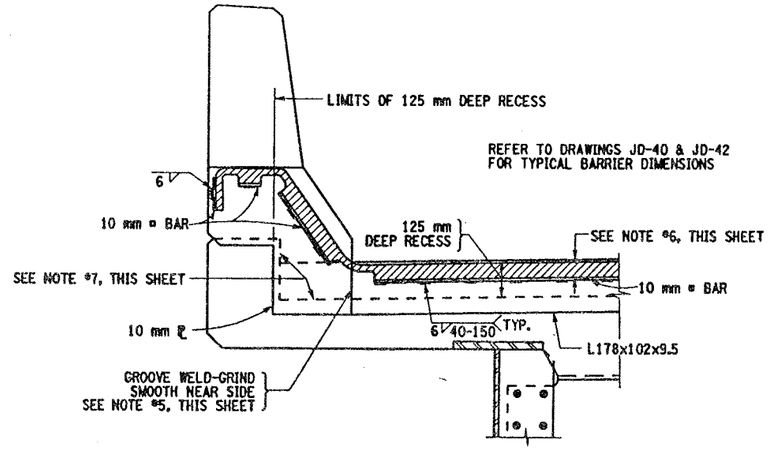

PROPOSED ABUTMENT JOINT
SECTION C-C (CONCRETE TRAFFIC BARRIER)
(REFER TO DWG. NO. JD-40 FOR OPPOSITE FASCIA DETAIL)
NOT TO SCALE

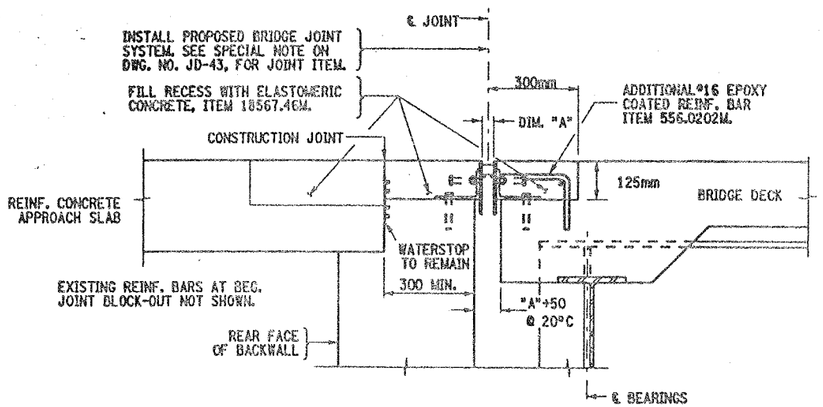

PROPOSED ABUTMENT JOINT
SECTION B-B
NOT TO SCALE

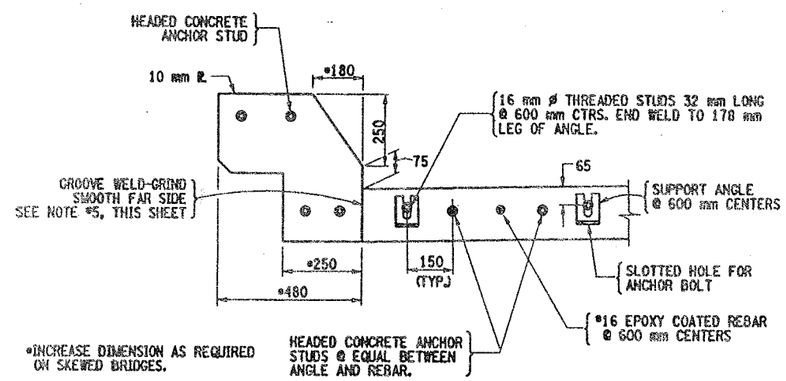

PROPOSED ABUTMENT JOINT
SECTION D-D (CONCRETE TRAFFIC BARRIER)
(ONLY THE STEEL SHOWN)

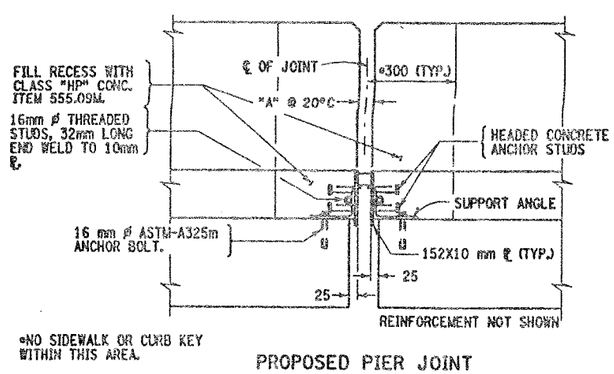

*NO SIDEWALK OR CURB KEY WITHIN THIS AREA.

PROPOSED PIER JOINT
SECTION E-E
NOT TO SCALE

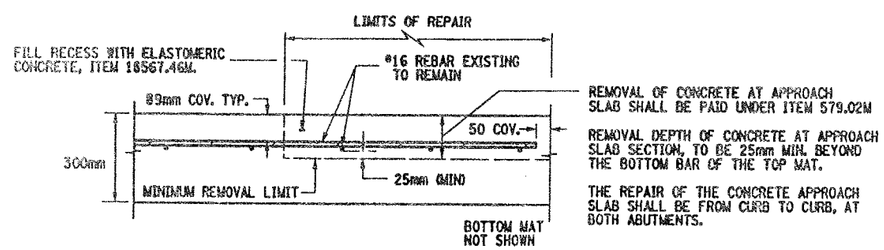

APPROACH SLAB REPAIR
DETAIL "A"
NOT TO SCALE

REMOVAL NOTE:

EXISTING EPOXY COATED REINF. BARS ENCOUNTERED AT THE JOINT BLOCK-OUTS, SHALL REMAIN. CARE SHALL BE TAKEN DURING REMOVAL OPERATIONS, NOT TO DAMAGE THE REINFORCEMENT BARS.

PRIOR TO PLACEMENT OF NEW CONCRETE THE EXISTING EPOXY BARS SHALL BE CLEANED AND ANY FIELD REPAIRS DEEMED NECESSARY BY THE ENGINEER, BE MADE AS PER SECTION 556-3.02(C) OF STANDARD SPECIFICATIONS. TO BE INCLUDED IN PRICE BID FOR ITEM 580.01M.

NOTES:

1. ACTUAL BRIDGE JOINT BLOCK-OUT DIMENSIONS MAY VARY. REMOVAL LIMITS SHALL BE TO EXISTING BLOCK-OUT LOCATIONS, AOBE.
2. EXISTING WATERSTOPS SHALL REMAIN.
3. FOR CALCULATION OF "A" DIMENSION REFER TO DWG. NO. JD-1.
4. REFER TO DWG. NO. JD-43 FOR PROPOSED PARTIAL PLAN VIEWS.
5. ALL WELDS SHALL BE GROUND SMOOTH TO THE SATISFACTION OF THE ENGINEER, ON SEAL CONTACT SIDE OF EDGE BEAM.
6. THIS DEPTH SHALL BE INDICATED ON THE SHOP DRAWINGS AND SHALL BE SUCH THAT WHEN THE SEAL IS COMPRESSED TO 50% OF ITS NOMINAL WIDTH, THE TOP OF THE SEAL SHALL BE NOT LESS THAN 6 mm NOR MORE THAN 19 mm BELOW THE TOP OF ROADWAY.
7. RECESSES RECEIVING ITEM 555.09M, AFTER SURFACE PREPARATION, THOROUGHLY WET THE CONCRETE SURFACES AND ALL POROUS SURFACES TO BE IN CONTACT WITH NEW CONCRETE FOR 12 HOURS. NOTE, THE USE OF MATERIAL SPECIF. 705-22 PORTLAND CEMENT MORTAR BONDING GROUT HAS BEEN ELIMINATED. (PROJECT PROPOSAL).
8. SAWCUT CONCRETE APPROACH SLAB TO PRODUCE NEAT REMOVAL LINES, COST BE TO INCLUDED IN PRICE BID FOR ITEM 579.02M.
9. THE CONCRETE REMOVAL AT THE APPROACH SLAB SHALL CONFORM TO STANDARD SPECIF. 579-3.02, TO BE PAID UNDER ITEM 579.02M. (AT APPROACH SLABS ONLY)

ITEMS USED:

ITEM 555.09M - STRUCT. CONCRETE, CLASS "HP" (CM)
ITEM 556.0202M - EPOXY-COATED BAR REINF. FOR STRUCT. (Kg)
ITEM 18567.46M - ELASTOMERIC CONCRETE FOR BRIDGE JOINT SYSTEMS (LM)
ITEM 579.02M - REINFORCED BAR EXPOSURE (SM)
ITEM 580.01M - REMOVAL OF STRUCT. CONCRETE (CM)

ALL DIMENSIONS ARE IN mm UNLESS OTHERWISE NOTED

AS BUILT REVISIONS

SIGNATURE DATE

INTERSTATE 481 NB
OVER
THOMPSON ROAD
BRIDGE JOINT DETAILS

STATE OF NEW YORK
DEPARTMENT OF TRANSPORTATION

FILENAME	REGION	DATE	DRAWING NO.
305613AJJA1	3	10/02	JD-44

DESIGN SUPERVISOR ____ JOB MANAGER ____ DESIGNED BY ____ ESTIMATED BY ____ DRAFTED BY ____ CHECKED BY ____ CHECKED BY ____

Asbestos Sampling Survey

Location:

BIN 1072792
Interstate Route I-481 North Bound
over Thompson Road

Prepared for:

New York State
Department of Transportation

PIN 3056.13.111

LaBella Project No. 201001

August 2001

Table of Contents

Page

I. Project Summary 1

II. Site Description 1

III. Inspection Procedures 1

IV. Results 2

Certification 2

Figures and Table

I. Project Summary

In accordance with conditions of Term Agreement D012606, LaBella Associates, P.C. conducted an asbestos sampling survey of the Interstate Route I-481 north bound bridge over Thompson Road. Based on laboratory analyses of bulk samples collected, no asbestos-containing materials were identified.

II. Site Description

The Site is located in Onondaga County, New York. For the purpose of this report, the Site consists of the Interstate Route I-481 north bound bridge over Thompson Road. (See attached FIGURE 1 - Site Location Map).

III. Inspection Procedures

The following procedures were used to obtain the data for this Report:

A. A review of record drawings supplied by Region 3 personnel and a visual inspection of the subject structure were conducted to identify potential visible/accessible sources of asbestos-containing materials. Observations and notes were made to provide a description of the structure, and an estimate of the approximate amount, length, or area of ACM present.

B. Physical or operational constraints, which might affect the removal of the ACM, were identified and reported.

C. Bulk samples of suspected ACM were collected during the site inspection of the subject structure. Samples were taken from each homogeneous area that may contain ACM.

D. Samples were submitted for analysis. Preliminary PLM analyses of NOB materials were performed by LaBella Laboratories, a NYSDOH approved laboratory, to determine the presence and percentage of asbestos in each sample. TEM analyses of NOB materials, if necessary, were performed by AMA Analytical, Inc.

E. Lab results were used to determine the approximate location, type, and amount of the verified ACM.

F. A drawing of the structure at the Site was created, in order to show sample locations and the approximate locations and amounts of confirmed ACM observed in accessible locations.

Only accessible areas were inspected. Inaccessible areas, such as areas within the bridge or the approaches to the bridge were not included in this inspection. No investigation was conducted by LaBella Associates to determine the presence of underground utilities on or in the immediate vicinity of the Site. Actual sample locations are shown in the attached FIGURE 2. Results of bulk sample analyses are tabulated in the attached TABLE.

IV. Results

BIN 1072792 Interstate Route I-481 North Bound over Thompson Road

Based on laboratory analyses of bulk samples collected, no asbestos-containing materials were identified.

Certification

LaBella Associates, P.C. certifies the accuracy of this report, to the best of our knowledge, based on the information collected as described in the Inspection Procedures Section of this investigation.

Figures & Table

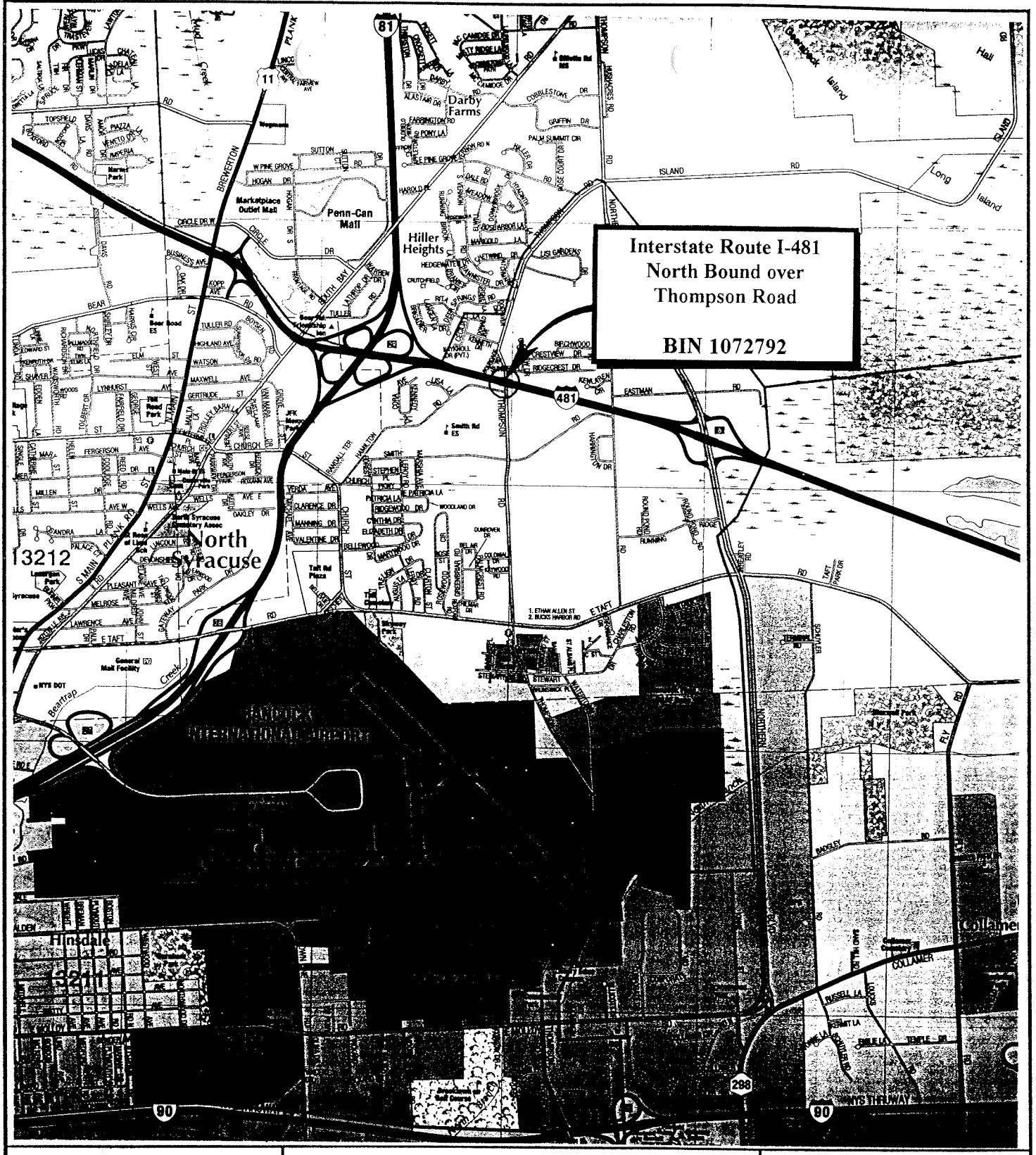

N

FIGURE 1
Site Location Map

Interstate Route I-481 North Bound over Thompson Road
Onondaga County, New York

LABELLA

PROJECT NO. 201001

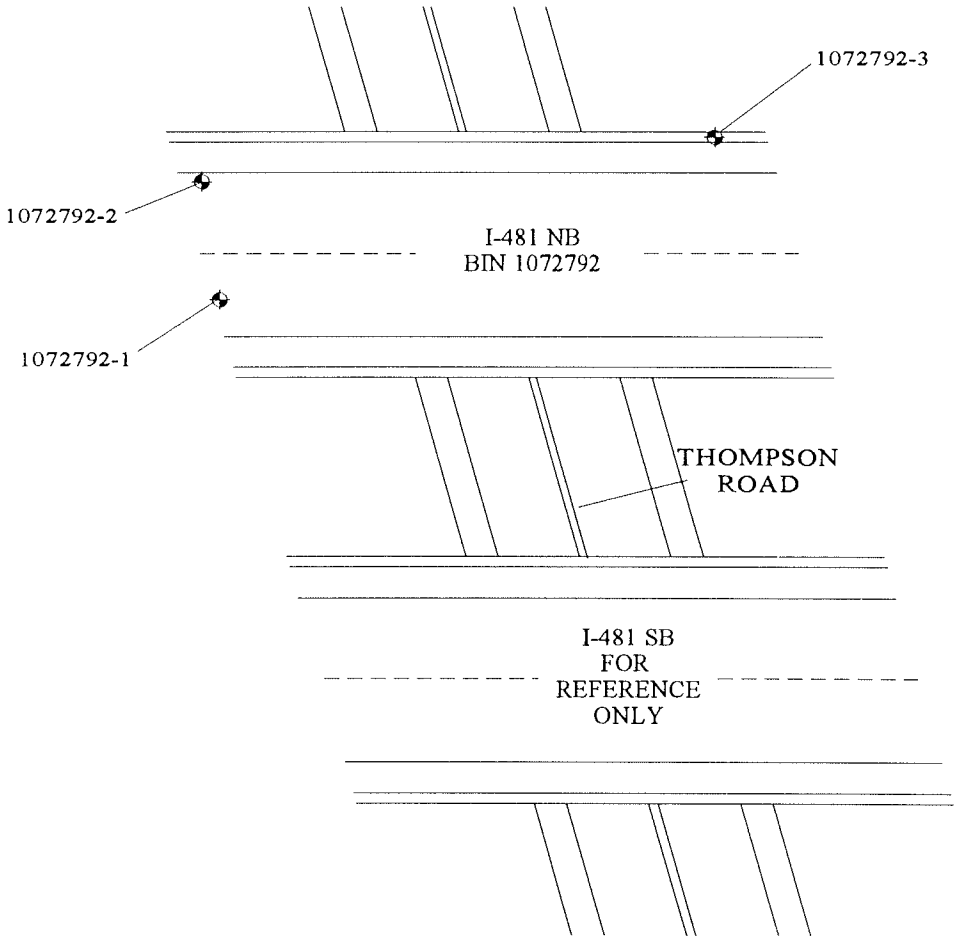

NOTE: NO ASBESTOS-CONTAINING MATERIALS IDENTIFIED.

LEGEND

1072792-1 SAMPLE LOCATION

NORTH	PROJECT TITLE: ASBESTOS SAMPLING SURVEY 19 BRIDGES ALONG INTERSTATE I-481 ONONDAGA COUNTY, NEW YORK	PROJECT NO. 201001 PIN 3056.13.111
	FIGURE TITLE: FIGURE 2 BIN 1072792 I-481 NB OVER THOMPSON ROAD SAMPLE LOCATIONS & CONFIRMED ACM	NOT TO SCALE DATE: AUGUST, 2001

Bulk Sample Results Table

Asbestos Sampling Survey
BIN 1072792
Interstate Route I-481 North Bound
over Thompson Road
Onondaga County, New York
LaBella Project # 201001
PIN 3056.13.111

Sample #	Sample Location	Type of Material	Results % Asbestos	Amount of Material	Specification Item No.
1072792-1	East End of Bridge at Base of Fence	Gray Caulking Compound	None Detected	N/A	N/A
1072792-2	West End of Bridge Beneath Bearing	Bearing Pad	None Detected	N/A	N/A
1072792-3	West End of Bridge on Backwall	Gray Masonry Coating	None Detected	N/A	N/A

Watts
Architects
&Engineers

BIN 1093561

I-81 (Former I-481) SB over Manlius Center Road (Route 290)

BIN 1093561

Location: I-481 SB over Manlius Center Road (Route 290)

NYSDOT D031085 PIN 3501.60 - I-81 Viaduct Replacement or New Urban Arterial
City of Syracuse, Onondaga County
Bridge Asbestos Assessment Results

Asbestos containing materials have been identified on this bridge.

ITEM	DESCRIPTION	QUANTITY
210.481201	Removal and Disposal of Miscellaneous ACM (BV14) – Sheet Packing	112 SQ FT

The following summarizes the results of the most recent asbestos survey and record plan review.

Watts Inspection Findings (February 2014)

A bridge inspection was completed on 2/25/2014 and the following suspect ACMs were identified and sampled:

- Green girder paint
- Thin beige/grey abutment wall paint on lower part of abutments
- Thick beige/grey paint at top part of abutments
- Bearing pad
- Compressed asbestos sheet packing

Laboratory analysis indicated that the compressed asbestos sheet packing sampled by Watts was confirmed positive for asbestos. The other listed materials were not positive for asbestos, per laboratory analytical results.

Review to the Historic Plans and Previous Asbestos Survey Information

- Record plans (D259214) were reviewed in support of the field survey. There were no suspect ACMs identified.
- Sampling of bridge paint and laboratory results from an inspection completed by Athenica Environmental Services Inc., in 2004 did not identify any asbestos in the paint samples per laboratory analytical methods.
- A previous asbestos survey competed by LaBella in 1999 was reviewed in support of this project. The following materials were identified for analysis.
    - Green bridge paint
        - Sheet packing
        - Grey masonry coating

- Bearing pad

The sheet packing was identified to be asbestos containing.

Watts Architecture & Engineering

BRIDGE ASBESTOS FIELD INSPECTION FORM

BIN Number/Location: 1093561 I-481SB over Manlius Center Rd
Inspection Date: 2/25/2014
Project Name: : I-81 Viaduct Replacement or New Urban Arterial
PIN Number: PIN: 3501.60, D031085
Inspector(s): Scott Matthews
Watts Project No: 13092

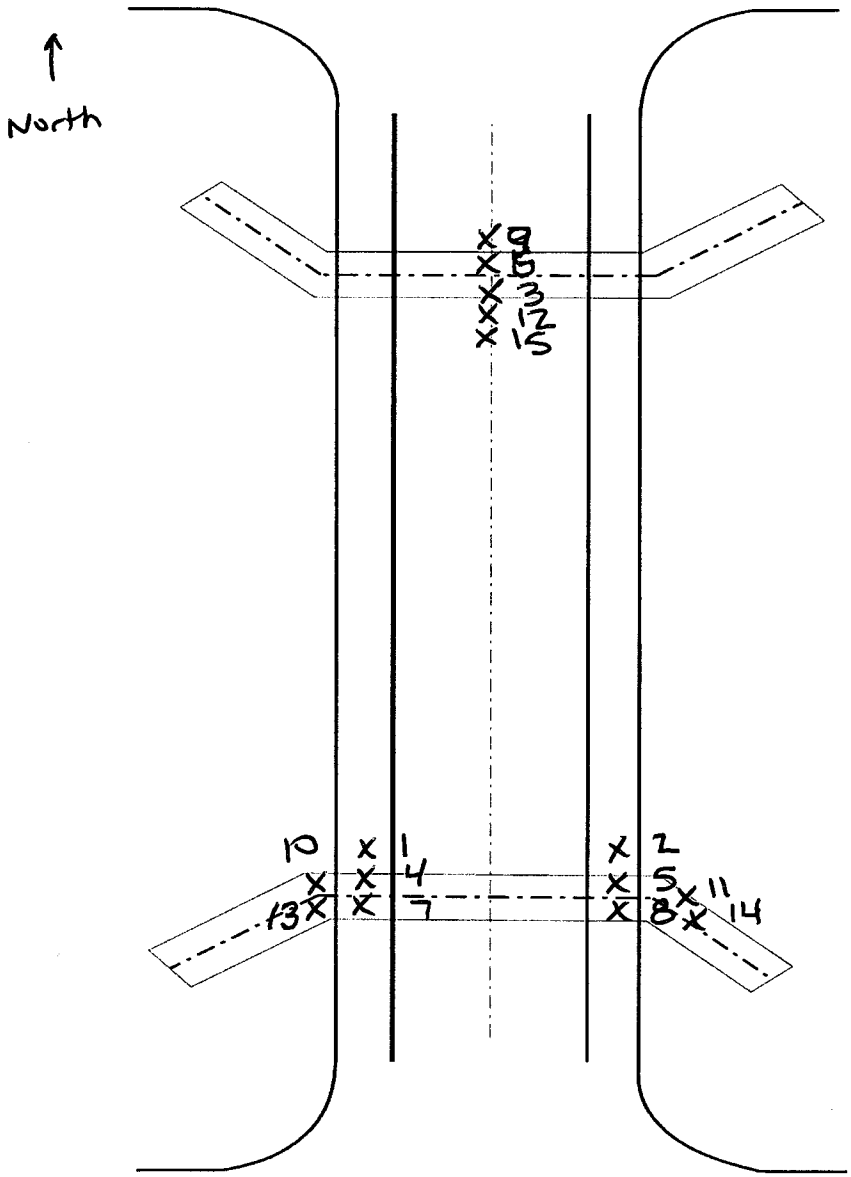

SAMPLE LOCATION PLAN VIEW - N.T.S.

Field Inspection Checklist Item	Investigated	Present	Sampled	
Girder Paint	✓	✓	✓	1-3
Truss Paint	✓			
Abutment Coating	✓	✓	✓	4-6 7-9
Abutment Caulk	✓			
Abut. Exp. Jt. Filler	✓			
Headwall Sheet Packing	✓			
Bearing Pad	✓	✓	✓	10-12
Transite Pipe	✓			
Pipe Coating/Wtr. Proof	✓			
Scupper Wtr. Proof	✓			
Dum Dum Paint	✓			
Deck Caulk	✓			
Deck Exp. Jt. Filler	✓			
Approach Sheet Packing	✓	✓	✓	13-15
Railing Paint	✓			
Railing Caulk	✓			
Sidewalk Caulk				
Lighting Pole Caulk				
Masonry Castings				
Miscellaneous Tar				
Utilities				
Other				
Other				
Other				
Other				
Other				

Notes: • Girder paint was green in color
• Abutment wall paint is thinner than layer on top of the abutment. Color is beige/light gray.

EMSL Analytical, Inc.
490 Rowley Road, Depew, NY 14043
Phone/Fax: (716) 651-0030 / (716) 651-0394
http://www.EMSL.com buffalolab@emsl.com

EMSL Order:	141400853
CustomerID:	WATT50A
CustomerPO:	
ProjectID:	

Attn: **Scott Matthews**
Watts Architecture & Engineering
2610 Salina Street
Syracuse, NY 13205

Phone:	(315) 443-8611
Fax:	(315) 443-8605
Received:	03/03/14 10:00 AM
Analysis Date:	3/7/2014
Collected:	2/25/2014

Project: **13092 - I81 Viaduct Replacement or New Urban Renewal Bin 1093561 - 481 SB Over Manlius Center Rd**

Test Report:Asbestos Analysis of Bulk Material

Test	Analyzed Date	Color	Non Asbestos Fibrous	Non Asbestos Non-Fibrous	Asbestos
Sample ID 1093561-1 *141400853-0001*		**Description**	green girder paint		
		Homogeneity	Homogeneous		
PLM NYS 198.1 Friable					**Not Analyzed**
PLM NYS 198.6 VCM					**Not Analyzed**
PLM NYS 198.6 NOB	3/6/2014	Green			**Inconclusive: None Detected**
TEM NYS 198.4 NOB	3/7/2014	Green			**None Detected**
Sample ID 1093561-2 *141400853-0002*		**Description**	green girder paint		
		Homogeneity	Homogeneous		
PLM NYS 198.1 Friable					**Not Analyzed**
PLM NYS 198.6 VCM					**Not Analyzed**
PLM NYS 198.6 NOB	3/6/2014	Green			**Inconclusive: None Detected**
TEM NYS 198.4 NOB	3/7/2014	Green			**None Detected**
Sample ID 1093561-3 *141400853-0003*		**Description**	green girder paint		
		Homogeneity	Homogeneous		
PLM NYS 198.1 Friable					**Not Analyzed**
PLM NYS 198.6 VCM					**Not Analyzed**
PLM NYS 198.6 NOB	3/6/2014	Green			**Inconclusive: None Detected**
TEM NYS 198.4 NOB	3/7/2014	Green			**None Detected**
Sample ID 1093561-4 *141400853-0004*		**Description**	beige/grey abutment wall paint thin coat		
		Homogeneity	Homogeneous		
PLM NYS 198.1 Friable					**Not Analyzed**
PLM NYS 198.6 VCM					**Not Analyzed**
PLM NYS 198.6 NOB	3/6/2014	Gray			**Inconclusive: None Detected**
TEM NYS 198.4 NOB	3/7/2014	Gray			**None Detected**
Sample ID 1093561-5 *141400853-0005*		**Description**	beige/grey abutment wall paint thin coat		
		Homogeneity	Homogeneous		
PLM NYS 198.1 Friable					**Not Analyzed**
PLM NYS 198.6 VCM					**Not Analyzed**
PLM NYS 198.6 NOB	3/6/2014	Gray			**Inconclusive: None Detected**
TEM NYS 198.4 NOB	3/7/2014	Gray			**None Detected**

Initial Report From 03/07/2014 13:49:16

EMSL Analytical, Inc.
490 Rowley Road, Depew, NY 14043
Phone/Fax: (716) 651-0030 / (716) 651-0394
http://www.EMSL.com buffalolab@emsl.com

EMSL Order:	141400853
CustomerID:	WATT50A
CustomerPO:	
ProjectID:	

Test Report:Asbestos Analysis of Bulk Material

Test		Color	Fibrous	Non Asbestos Non-Fibrous	Asbestos
Sample ID 1093561-6 *141400853-0006*		**Description**	beige/grey abutment wall paint thin coat		
		Homogeneity	Homogeneous		
PLM NYS 198.1 Friable					**Not Analyzed**
PLM NYS 198.6 VCM					**Not Analyzed**
PLM NYS 198.6 NOB	3/6/2014	Gray			**Inconclusive: None Detected**
TEM NYS 198.4 NOB	3/7/2014	Gray			**None Detected**
Sample ID 1093561-7 *141400853-0007*		**Description**	beige/grey paint at top of abutment thick coat		
		Homogeneity	Homogeneous		
PLM NYS 198.1 Friable					**Not Analyzed**
PLM NYS 198.6 VCM					**Not Analyzed**
PLM NYS 198.6 NOB	3/6/2014	Gray			**Inconclusive: None Detected**
TEM NYS 198.4 NOB	3/7/2014	Gray			**None Detected**
Sample ID 1093561-8 *141400853-0008*		**Description**	beige/grey paint at top of abutment thick coat		
		Homogeneity	Homogeneous		
PLM NYS 198.1 Friable					**Not Analyzed**
PLM NYS 198.6 VCM					**Not Analyzed**
PLM NYS 198.6 NOB	3/6/2014	Gray			**Inconclusive: None Detected**
TEM NYS 198.4 NOB	3/7/2014	Gray			**None Detected**
Sample ID 1093561-9 *141400853-0009*		**Description**	beige/grey paint at top of abutment thick coat		
		Homogeneity	Homogeneous		
PLM NYS 198.1 Friable					**Not Analyzed**
PLM NYS 198.6 VCM					**Not Analyzed**
PLM NYS 198.6 NOB	3/6/2014	Gray			**Inconclusive: None Detected**
TEM NYS 198.4 NOB	3/7/2014	Gray			**None Detected**
Sample ID 1093561-10 *141400853-0010*		**Description**	bearing pad		
		Homogeneity	Heterogeneous		
PLM NYS 198.1 Friable					**Not Analyzed**
PLM NYS 198.6 VCM					**Not Analyzed**
PLM NYS 198.6 NOB	3/6/2014	Brown			**Inconclusive: None Detected**
TEM NYS 198.4 NOB	3/7/2014	Brown			**None Detected**
Sample ID 1093561-11 *141400853-0011*		**Description**	bearing pad		
		Homogeneity	Heterogeneous		
PLM NYS 198.1 Friable					**Not Analyzed**
PLM NYS 198.6 VCM					**Not Analyzed**
PLM NYS 198.6 NOB	3/6/2014	Brown			**Inconclusive: None Detected**
TEM NYS 198.4 NOB	3/7/2014	Brown			**None Detected**

Initial Report From 03/07/2014 13:49:16

EMSL Analytical, Inc.
490 Rowley Road, Depew, NY 14043
Phone/Fax: (716) 651-0030 / (716) 651-0394
http://www.EMSL.com buffalolab@emsl.com

EMSL Order:	141400853
CustomerID:	WATT50A
CustomerPO:	
ProjectID:	

Test Report:Asbestos Analysis of Bulk Material

Test			Color	Fibrous	Non Asbestos Non-Fibrous	Asbestos
Sample ID	1093561-12 *141400853-0012*		**Description** **Homogeneity**	bearing pad Heterogeneous		
PLM NYS 198.1 Friable						**Not Analyzed**
PLM NYS 198.6 VCM						**Not Analyzed**
PLM NYS 198.6 NOB		3/6/2014	Brown			**Inconclusive: None Detected**
TEM NYS 198.4 NOB		3/7/2014	Brown			**None Detected**
Sample ID	1093561-13 *141400853-0013*		**Description** **Homogeneity**	sheet packing Homogeneous		
PLM NYS 198.1 Friable						**Not Analyzed**
PLM NYS 198.6 VCM						**Not Analyzed**
PLM NYS 198.6 NOB		3/6/2014	Gray			**11.8% Chrysotile** **11.8% Total**
TEM NYS 198.4 NOB		3/7/2014				**Not Analyzed**
Sample ID	1093561-14 *141400853-0014*		**Description** **Homogeneity**	sheet packing Homogeneous		
PLM NYS 198.1 Friable						**Not Analyzed**
PLM NYS 198.6 VCM						**Not Analyzed**
PLM NYS 198.6 NOB		3/6/2014	Gray			**11.8% Chrysotile** **11.8% Total**
TEM NYS 198.4 NOB		3/7/2014				**Not Analyzed**
Sample ID	1093561-15 *141400853-0015*		**Description** **Homogeneity**	sheet packing Homogeneous		
PLM NYS 198.1 Friable						**Not Analyzed**
PLM NYS 198.6 VCM						**Not Analyzed**
PLM NYS 198.6 NOB		3/6/2014	Gray			**8.8% Chrysotile** **8.8% Total**
TEM NYS 198.4 NOB		3/7/2014				**Not Analyzed**

Initial Report From 03/07/2014 13:49:16

EMSL Analytical, Inc.
490 Rowley Road, Depew, NY 14043
Phone/Fax: (716) 651-0030 / (716) 651-0394
http://www.EMSL.com buffalolab@emsl.com

EMSL Order:	141400853
CustomerID:	WATT50A
CustomerPO:	
ProjectID:	

Test Report:Asbestos Analysis of Bulk Material

		Non Asbestos		
Test	**Color**	**Fibrous**	**Non-Fibrous**	**Asbestos**

Analyst(s)
Rhonda McGee

Rhonda McGee, Laboratory Manager
or other approved signatory

NOB = Non Friable Organically Bound N/A = Not Applicable VCM = Vermiculite Containing Material

-In New York State, TEM is currently the only method that can be used to determine if NOB materials can be considered or treated as non-asbestos containing.
All samples examined for the presence of vermiculite when analyzed via NYS 198.1.
-NYS Guidelines for Vermiculite containing samples are available at http://www.wadsworth.org/labcert/elapcert/forms/VermiculiteInterimGuidance_Rev070913.pdf
EMSL maintains liability limited to cost of analysis. This report relates only to the samples reported above and may not be reproduced, except in full, without written approval by EMSL. EMSL bears no responsibility for sample collection activities or analytical method limitations. Interpretation and use of test results are the responsibility of the client. Samples were received in good condition unless otherwise noted.
This report must not be used by the client to claim product certification, approval, or endorsement by NVLAP, NIST, or any agency of the federal government. This report may contain data that is not covered by the NVLAP accreditation.

Samples analyzed by EMSL Analytical, Inc. Depew, NY NYS ELAP 11606

Initial Report From 03/07/2014 13:49:16

141400853

Page: 1 of 2
Date: 2-25-14

WATTS ARCHITECTURE & ENGINEERING
ASBESTOS BULK SAMPLE CHAIN-OF-CUSTODY

Watts Project No.: 13092

Client: Parsons Engineering
Project: I-81 Viaduct Replacement or New Urban Renewal
Building / Location: BIN 1093561 (481 SB over Manlius Center Rd)
Contact: Scott Matthews at (315) 443-8611
Email Preliminary Results to: smatthews@watts-ae.com
Mail Invoice to: Accounts Payable
Watts Architecture & Engineering
95 Perry Street, Buffalo, NY 14203

Turnaround Requested: ___ 3 Hr. ___ 48 Hr. ___ 6 Hr. ___ 72 Hr. ___ 12 Hr. X 5 Day ___ 24 Hr. ___ 6-10 Day
Analysis Requested: PLM X TEM X
1 week asp Matt. 3/3/14

Mail Report to: Scott Matthews
Watts Architecture & Engineering
2610 S Salina Street, Syracuse, NY 13210

Sample Number	Material Description	Sample Location	Laboratory Results PLM	Laboratory Results TEM
1093561-1	Green girder paint	~~1093561~~ SW corner		
2	" " "	SE corner		
3	" " "	North middle		
1093561-4	Beige/grey abutment wall paint (thin coat)	SW corner		
-5	" " "	SE corner		
-6	" " "	North middle		
-7	Beige/grey paint at top of abutment (thick coat)	SW corner		
-8	" " "	SE corner		
-9	" " "	N. middle		
-10	Bearing pad "	SW corner		
-11	" " "	SE corner		
-12	" " "	N. middle		

Sampled By: Scott Matthews Date: 2-25-14 Received By: RECEIVED MAR 0 3 2014 BY: Date: FX
Relinquished By: Scott Matthews to FedEx Date: 2-28-14 Received By: Date: 10Am
Comments:

C:\Documents and Settings\smatthews\Desktop\BulkForm.xls
2/24/2014

OrderID: 141400415

141400853

WATTS ARCHITECTURE & ENGINEERING
ASBESTOS BULK SAMPLE CHAIN-OF-CUSTODY

Page: 2 of 2
Date: 2-25-14

Client: Parsons Engineering
Project: I-81 Viaduct Replacement or New Urban Renewal
Building / Location: BIN 1093561 (481 SB over Manlius Center Rd)
Contact: Scott Matthews at (315) 443-8611
Email Preliminary Results to: smatthews@watts-ae.com
Mail Invoice to: Accounts Payable, Watts Architecture & Engineering, 95 Perry Street, Buffalo, NY 14203

Watts Project No.: 13092
Turnaround Requested: ___ 3 Hr. ___ 48 Hr.
Analysis Requested: ___ 6 Hr. ___ 72 Hr.
PLM X TEM X ___ 12 Hr. X 5 Day
___ 24 Hr. ___ 6-10 Day

Mail Report to: Scott Matthews, Watts Architecture & Engineering, 2610 S Salina Street, Syracuse, NY 13210

03/14 1 Week per Matt.

Sample Number	Material Description	Sample Location	Laboratory Results PLM	Laboratory Results TEM
1093561 - 13	Sheet packing	SW corner		
14	" "	SE corner		
15	" "	~~NE corner~~ North-middle		

Sampled By: Scott Matthews Date: 2-25-14 Received By: RECEIVED MAR 03 2014 BY: Date: FX
Relinquished By: Scott Matthews to FedEx Date: 2-28-14 Received By: Date: 10 Am
Comments:

C:\Documents and Settings\smatthews\Desktop\BulkForm.xls
2/24/2014

OrderID: 141400853

Watts
Architects
&Engineers

BIN 1093561 Inspection Photos

I-81 (Former I-481) SB over Manlius Center Road (Route 290)

Photo 1

Photo 2

Photo 3

Photo 4

Photo 5

Photo 6

3/3 10935561

D259214

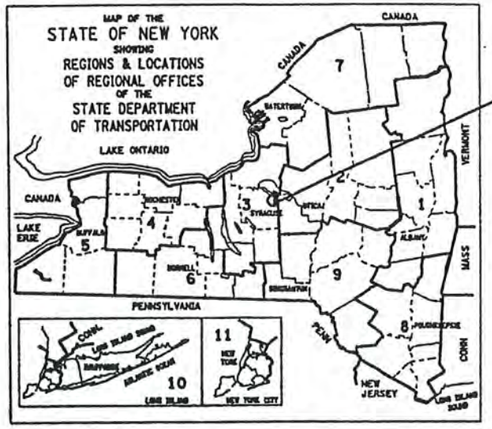

THIS IS A BRIDGE REHABILITATION PROJECT ON VARIOUS BRIDGES ON INTERSTATE 481, LOCATED IN THE TOWNS OF CICERO AND DEWITT IN ONONDAGA COUNTY. THIS WORK CONSISTS OF BRIDGE JOINTS, BEARINGS, BRIDGE RAIL AND CONCRETE REPAIR OF SUBSTRUCTURES. THERE ARE 28 BRIDGES IN THE PROJECT BEGINNING AT REFERENCE MARKER 481I-3301-1000 SOUTH OF THE CITY OF SYRACUSE AND ENDING AT REFERENCE MARKER 481I-3301-2143. I481 INTERCHANGE NORTH OF THE CITY.

STATE OF NEW YORK
DEPARTMENT OF TRANSPORTATION
OFFICE OF ENGINEERING

BRIDGE REHABILITATION PROJECT (ELEMENT SPECIFIC)
VARIOUS BRIDGES ON INTERSTATE 481
TOWNS OF DEWITT AND CICERO

VOLUME 1 OF 2

432 SHEETS ONONDAGA COUNTY CONTRACT D259214

F.A. PROJECT

STANDARD SHEETS

M203-4, M203-5, M203-6R1, M603-1
M606-32, M606-33, M606-34,
M619-3R1, M619-4, M619-5
M685-1, M685-2R1, M685-3R1
M685-4R1, M685-5R1, M403-1, M203-4,
M203-5, M203-6R1, M603-1

✓ B Pedhe 4/14/04
✓ C Clark 5/9/06 & v.o.t.
✓ H Cole 05/09/06
Rune/Sally 4/24/10
PTR 4/17/12

ALL WORK CONTEMPLATED UNDER THIS CONTRACT IS TO BE COVERED BY AND IN CONFORMITY WITH THE STANDARD SPECIFICATIONS (METRIC UNITS) OF JANUARY 2, 2002, AS AMENDED BY ADDENDA NOS. 1 AND 2, EXCEPT AS MODIFIED ON THESE PLANS AND IN THE ITEMIZED PROPOSAL.

CONTRACTOR'S NAME _____
AWARD DATE _____
COMPLETION DATE _____
FINAL ACCEPTANCE DATE _____
REGIONAL DIRECTOR _____
ENGINEER IN CHARGE _____
FINAL COST TOTAL _____
FISCAL SHARE COST(S)

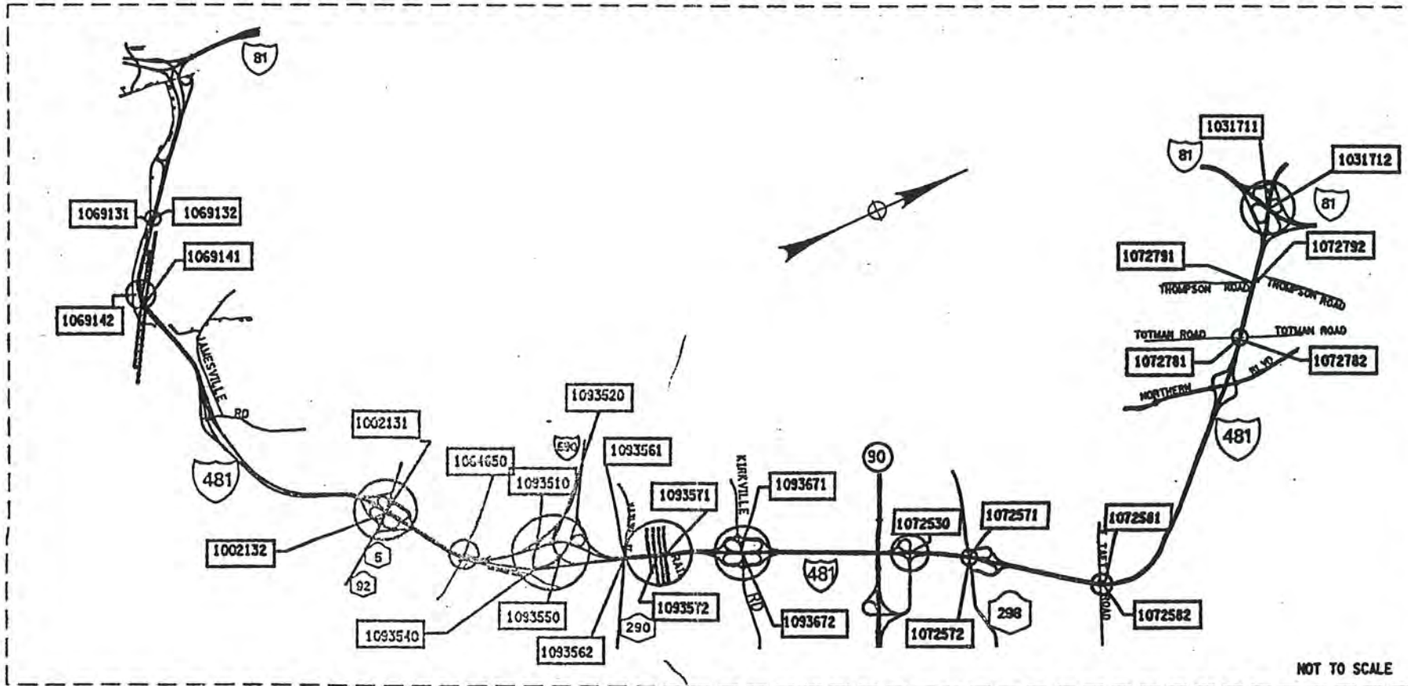

PROJECT LOCATION

BRIDGE REHAB. PROJ.- ELEMENT SPECIFIC			
VARIOUS BRIDGES ON INTERSTATE 481			
TOWNS OF DEWITT AND CICERO			
ONONDAGA COUNTY			
FED. ROAD REG. NO.	STATE	SHEET NO.	TOTAL SHEETS
1	N.Y.	1	432
FEDERAL AID PROJECT NO.			
CAPITAL PROJECT IDENTIFICATION NO. 3056.13			
INDEX ON SHEET NO. 5 & 6			

RECOMMENDED BY John E Fritz 9/04/02
REGIONAL DESIGN ENGINEER DATE

RECOMMENDED BY Myron A. Quirk 9/4/02
REGIONAL CONSTRUCTION ENGINEER DATE

RECOMMENDED BY 9/04/02
REGIONAL TRANSPORTATION MAINTENANCE ENGINEER DATE

RECOMMENDED BY 9-4-02
REGIONAL TRAFFIC ENGINEER DATE

APPROVED BY 09-04-02
REGIONAL DIRECTOR DATE

DESIGN SUPERVISOR Clement S. JOB MANAGER Nick Decico DESIGNED BY Bradshaw CHECKED BY Clement ESTIMATED BY Bassi Wey DRAFTED BY Al Sabo CHECKED BY

FED ROAD REG. NO.	STATE	CONTRACT NO.	SHEET NO.	TOTAL SHEETS
1	N.Y.	D259214	5	432

BRIDGE REHABILITATION PROJECT (ELEMENT SPECIFIC)
VARIOUS BRIDGES ON INTERSTATE 481
TOWNS OF DEWITT AND CICERO
ONONDAGA COUNTY
P.I.N. 305613 B.I.N. ALL BINS

INDEX

SHEET NO.	DESCRIPTION	DRAWING NO.
1	TITLE SHEET	COVER
2,3,4	ESTIMATE OF QUANTITIES	
5,6	INDEX	IDX-1 - IDX-2
7-155	MAINTENANCE AND PROTECTION OF TRAFFIC	MPT-1 - MPT-149
156	CROSSOVER TYPICAL SECTION	CTS-1
157-160	CROSSOVER SURVEY CONTROL DATA	HC-1 - HC-4
161-166	CROSSOVER PLANS	CPL-1 - CPL-6
167-174	CROSSOVER PROFILES	CPR-1 - CPR-8
175-177	CROSSOVER MISC. DETAILS	CMD-1 - CMD-3
178-179	CROSSOVER MISC. TABLES	CMT-1 - CMT-2
180-191	ESTIMATE OF QUANTITIES BY STRUCTURE	QE-1A - QE-4C
192	GENERAL NOTES	GN-1
193	BIN 1002131, I481SB/RT. 5, PLAN AND ELEVATION	GP1-1
194	BIN 1002131, TYPICAL BRIDGE SECTION AND PROFILE	TS1-1
195-197	BIN 1002131, SOUTH ABUTMENT (SB)	AB1-1 - AB1-3
198-199	BIN 1002131, NORTH ABUTMENT (SB), SHEET PILING LAYOUT	AB1-4 - AB1-5
200-201	BIN 1002131 PIER 1 & PIER 2 SB REMOVAL DETAILS	PR1-1 & PR1-2
202	BIN 1002131, PEDESTAL REPLACEMENT	PR1-3
203	BIN 1002131, BOLSTER DETAILS	PR1-4
204	BIN 1002131, ANCHOR BOLT LAYOUT (SB)	PR1-5
205	BIN 1002132, I481NB/RT. 5, PLAN AND ELEVATION	GP2-1
206-207	BIN 1002132, TYPICAL BRIDGE SECTION AND PROFILE, APPROACH SECTION	TS2-1 & TS2-2
208-213	BIN 1002132, SOUTH ABUTMENT (NB)	AB2-1 - AB2-6
214-219	BIN 1002132, NORTH ABUTMENT (NB)	AB2-7 - AB2-12
220-221	BIN 1002132, PIERS (NB)	PR2-1 & PR2-2
222	BIN 1002132, PEDESTAL REPLACEMENT (NB)	PR2-3
223	BIN 1002132, BOLSTER DETAILS (NB)	PR2-4
224	BIN 1002132, ANCHOR BOLT LAYOUT (NB)	PR2-5
225	BIN 1031711 AND 1031712, I-481/I-81, PLAN AND ELEVATION	GP3-1
226	BIN 1031711 & 1031712, TYPICAL BRIDGE SECTION AND PROFILE	TS3-1
227	BIN 1031711, EAST ABUTMENT (SB) PLAN & ELEVATION	AB3-1
228	BIN 1031711, WEST ABUTMENT (SB) PLAN & ELEVATION	AB3-2
229	BIN 1031712, EAST ABUTMENT (NB) PLAN & ELEVATION	AB3-3
230	BIN 1031712, WEST ABUTMENT (NB) PLAN & ELEVATION	AB3-4
231	BIN 1031711 & 1031712, APPROACH SLABS	AS3-1
232	BIN 1064650, KINNE RD/I-481, PLAN, ELEVATION, AND BRIDGE SECTION	GP4-1
233	BIN 1069131 & 1069132, I-481/QUARRY DRIVEWAY, PLAN AND ELEVATION	GP5-1
234	BIN 1069131 & 1069132, TYPICAL BRIDGE SECTION AND PROFILE AND BRIDGE SECTION	TS5-1
235	BIN 1069131, WEST ABUTMENT (SB) PLAN & ELEVATION	AB5-1
236	BIN 1069131, EAST ABUTMENT (SB) PLAN & ELEVATION	AB5-2
237	BIN 1069132, EAST ABUTMENT (NB) PLAN & ELEVATION	AB5-3
238-239	BIN 1069141 & 1069142, I-481/NYS + W RAILROAD, GENERAL PLAN AND ELEVATION	GP6-1 - GP6-2
240-241	BIN 1069141 & 1069142, TYPICAL BRIDGE SECTION AND PROFILES	TS6-1 & TS6-2
242	BIN 1069141, WEST ABUTMENT (SB) PLAN & ELEVATION	AB6-1
243	BIN 1069141, EAST ABUTMENT (SB) PLAN & ELEVATION	AB6-2
244	BIN 1069142, WEST ABUTMENT (NB) PLAN & ELEVATION	AB6-3
245	BIN 1069142, EAST ABUTMENT (NB) PLAN & ELEVATION	AB6-4

INDEX (CONTINUED)

SHEET NO.	DESCRIPTION	DRAWING NO.
246	BIN 1072530, RAMP TO I-481/I-481, PLAN, ELEVATION AND BRIDGE SECTION	GP7-1
247-248	BIN 1072530, EAST ABUTMENT	AB7-1 - AB7-2
249	BIN 1072571 & BIN 1072572, I-481/ROUTE 298 PLAN AND ELEVATION AND BRIDGE SECTION	GP8-1
250	BIN 1072571 & BIN 1072572, TYPICAL BRIDGE SECTION AND PROFILE	TS8-1
251	BIN 1072571, SOUTH ABUTMENT (SB) PLAN & ELEVATION	AB8-1
252	BIN 1072571, NORTH ABUTMENT (SB) PLAN & ELEVATION	AB8-2
253	BIN 1072572, SOUTH ABUTMENT (NB) PLAN & ELEVATION	AB8-3
254	BIN 1072581 & BIN 1072582, I-481/TAFT ROAD, PLAN AND ELEVATION	GP9-1
255	BIN 1072581 & 1072582, TYPICAL BRIDGE SECTION AND PROFILE	TS9-1
256-257	BIN 1072581, SOUTH ABUTMENT AND NORTH ABUTMENT (SB)	AB9-1 & AB9-2
258-259	BIN 1072582, SOUTH ABUTMENT AND NORTH ABUTMENT (NB)	AB9-3 & AB9-4
260	BIN 1072781 & BIN 1072782, I-481/TOTMAN ROAD, PLAN, ELEVATION AND BRIDGE SECTION	GP10-1
261	BIN 1072781 & BIN 1072782 TYPICAL BRIDGE SECTION AND PROFILE	TS10-1
262-263	BIN 1072781, EAST ABUTMENT (SB) PLAN & ELEVATION	AB10-1 & AB10-2
264	BIN 1072782, WEST ABUTMENT (NB) PLAN & ELEVATION	AB10-3
265	BIN 1072781, APPROACH SLABS	AS10-1
266	BIN 1072791 & BIN 1072792, I-481/ THOMPSON ROAD, PLAN, ELEVATION AND BRIDGE SECTION	GP11-1
267	BIN 1072791 & BIN 1072792 TYPICAL BRIDGE SECTIONS AND PROFILE	TS11-1
268	BIN 1072791, EAST & WEST ABUTMENTS (SB)	AB11-1
269	BIN 1072791, APPROACH SLAB (SB)	AS11-1
270	BIN 1093510, I-690 RAMP/ I-481SB, PLAN, ELEVATION, AND BRIDGE SECTION	GP12-1
271	BIN 1093510, WEST ABUTMENT PLAN & ELEVATION	AB12-1
272	BIN 1093520, WN LINE OVER INTERSTATE 481 SB, PLAN, ELEVATION, AND BRIDGE SECTION	GP13-1
273	BIN 1093520, WEST ABUTMENT PLAN & ELEVATION	AB13-1
274	BIN 1093540, I-690 EB/ I-481 NB RAMP, PLAN, ELEVATION, AND BRIDGE SECTION	GP14-1
275	BIN 1093540 TYPICAL BRIDGE SECTION AND PROFILE	TS14-1
276	BIN 1093540, WEST ABUTMENT	AB14-1
277	BIN 1093550, I-481 NB/WB CONNECTOR, PLAN, ELEVATION, AND BRIDGE SECTION	GP15-1
278	BIN 1093550, SOUTH ABUTMENT, NB PLAN & ELEVATION	AB15-1
279	BIN 1093550, NORTH ABUTMENT, NB PLAN & ELEVATION	AB15-2
280	BIN 1093561 & 1093562, I-481/ROUTE 290, PLAN, ELEVATION AND BRIDGE SECTION	GP16-1
281	BIN 1093561 & 1093562 TYPICAL BRIDGE SECTION AND PROFILE	TS16-1
282	BIN 1093561, SOUTH ABUTMENT (SB) PLAN & ELEVATION	AB16-1
283	BIN 1093562, SOUTH ABUTMENT (NB) PLAN & ELEVATION	AB16-2
284-287	BIN 1093571 & BIN 1093572, I-481/CSX RAILROAD YARD, PLAN & ELEVATION	GP17-1 - GP17-4
288	BIN 1093571 AND BIN 1093572, TYPICAL BRIDGE SECTION AND PROFILES	TS17-1
289-293	BIN 1093571 AND BIN 1093672, DRAINAGE DETAILS	DD17-1 - DD17-5
294-296	BIN 1093571 AND BIN 1093672, SCUPPER EXTENSIONS	DD17-6 - DD17-8
297-314	BIN 1093571, PIERS 1-14, (SB)	PR17-1S - PR17-18S
315	BIN 1093572, SOUTH ABUTMENT (NB)	AB17-1
316-329	BIN 1093572, PIERS 1-14 (NB)	PR17-1N - PR17-14N
330-331	BIN 1093571 AND 1093572, PARAPET REPAIR DETAILS	PW17-1 & PW17-2
332	BIN 1093572, BRIDGE DECK REPAIRS	DR17-1

ALL DIMENSIONS ARE IN m UNLESS OTHERWISE NOTED

AS BUILT REVISIONS

SIGNATURE DATE

INTERSTATE 481
REHABILITATION PROJECT

INDEX

STATE OF NEW YORK
DEPARTMENT OF TRANSPORTATION

FILENAME	REGION	DATE	DRAWING NO.
305613AA.L2A	3	10/02	IDX-1

CHECKED BY
DRAFTED BY
ESTIMATED BY
CHECKED BY
DESIGNED BY

FED ROAD REG. NO.	STATE	CONTRACT NO.	SHEET NO.	TOTAL SHEETS
1	N.Y.	D259214	6	432

BRIDGE REHABILITATION PROJECT (ELEMENT SPECIFIC)
VARIOUS BRIDGE ON INTERSTATE 481
TOWN OF DEWITT AND CICERO
ONONDAGA COUNTY
P.I.N. 305613 B.I.N. VARIOUS

INDEX (CONTINUED)

SHEET NO.	DESCRIPTION	DRAWING NO.
333	BIN 1093671 & 1093672, I-481/KIRKVILLE ROAD, PLAN, ELEVATION AND BRIDGE SECTION	GP18-1
334	BIN 1093671 & BIN 1093672 TYPICAL BRIDGE SECTION AND PROFILE	TS18-1
335-336	BIN 1093671, SOUTH ABUTMENT (SB) PLAN, ELEVATION AND SECTIONS	AB18-1 - AB18-2
337	BIN 1093671, NORTH ABUTMENT (SB) PLAN & ELEVATION	AB18-3
338-339	BIN 1093672, SOUTH ABUTMENT (NB) PLAN, ELEVATION AND SECTIONS	AB18-4 - AB18-5
340	BIN 1093672, NORTH ABUTMENT (NB) PLAN & ELEVATION	AB18-6
341-342	BIN 1002131, BIN 1002132 & BIN 1093571, MULTIROTATIONAL BEARINGS	BR-1 & BR-2
343	BIN 1002131, BEARING RESTORATION DETAILS	BR-3
344	BINS 1069131 & 1069132, BEARING RESTORATION DETAILS	BR-4
345-346	BIN 1069141 & BIN 1069142, BEARING RESTORATION DETAIL	BR-5 & BR-6
347	BIN 1072530, BEARING RESTORATION DETAILS	BR-7
348	BIN 1072791 AND BIN 1072792 BEARING RESTORATION DETAILS	BR-8
349	BIN 1093550, BEARING RESTORATION DETAILS	BR-9
350-351	BINS 1093751 & 1093572, BEARING RESTORATION DETAILS	BR-10 & BR-11
352	BIN 1072781 BEARING RESTORATION DETAILS	BR-12
	RAILING DETAILS	
353-355	BIN 1002131 & BIN 1002132, RAILING DETAILS	RD-1 - RD-3
356-358	BIN 1069141 & BIN 1069142, RAILING DETAILS	RD-4 - RD-6
359-360	RAILING DETAILS	RD-7 - RD-8
	BRIDGE JOINTS	
361-364	BRIDGE JOINT TABLE	JT-1 - JT-4
365	COMPRESSION SEAL JOINT DETAIL (ALL BRIDGES)	JD-1
366-370	BIN 1002131, JOINT DETAILS	JD-2 - JD-6
371-375	BIN 1002132, JOINT DETAILS	JD-7 - JD-11
376-377	BIN 1031711 & BIN 1031712, JOINT DETAILS	JD-12 - JD-13
378-383	BIN 1064650, JOINT DETAILS	JD-14 - JD-19
384-385	BIN 1069131, JOINT DETAILS	JD-20 + JD-21
386-387	BIN 1069132, JOINT DETAILS	JD-22 + JD-23
388-392	BIN 1069141 & BIN 1069142	JD-24 - JD-28
393-394	BIN 1072530, JOINT DETAILS	JD-29 + JD-30
395-396	BIN 1072571, JOINT DETAILS	JD-31 + JD-32
397-398	BIN 1072572, JOINT DETAILS	JD-33 + JD-34
399-400	BIN 1072581, JOINT DETAILS	JD-35 + JD-36
401-402	BIN 1072582, JOINT DETAILS	JD-37 + JD-38
403-404	BIN 1072781, JOINT DETAILS	JD-39 + JD-40
405-406	BIN 1072782, JOINT DETAILS	JD-41 + JD-42
407-408	BIN 1072792, JOINT DETAILS	JD-43 + JD-44
409-410	BIN 1093510, JOINT DETAILS	JD-45 + JD-46
411	BIN 1072791, BIN 1093520 & BIN 1093540, JOINT DETAILS	JD-47
412-413	BIN 1093550, JOINT DETAILS	JD-48 + JD-49
414-416	BIN 1093561 & BIN 1093562, JOINT DETAILS	JD-50 - JD-52
417-420	BIN 1093571 & BIN 1093572, JOINT DETAILS	JD-53 - JD-56
421-423	BIN 1093671 & BIN 1093672, JOINT DETAILS	JF-57 - JD-59

INDEX (CONTINUED)

SHEET NO.	DESCRIPTION	DRAWING NO.
424	VARIOUS BRIDGES - ROAD PLATE DETAIL	AA - RP1
	BAR LIST	
425-428	ALL BINS (BRIDGE JOINT SYSTEMS)	BL-1 - BL-4
429	BIN 1002131 & 1002132	BL-5
430	BIN 1093571	BL-6
431	STRUCTURAL SLAB OVERLAY & ASPHALT PAVEMENT REPAIR DETAILS	MS-1
432	MISC. TABLE	MT-1

ALL DIMENSIONS ARE IN m UNLESS OTHERWISE NOTED

AS BUILT REVISIONS

SIGNATURE DATE

INTERSTATE 481
REHABILITATION PROJECT

INDEX

STATE OF NEW YORK
DEPARTMENT OF TRANSPORTATION

FILENAME	REGION	DATE	DRAWING NO.
305613AAL2A	3	10/02	IDX-2

CHECKED BY ____ DRAFTED BY ____ ESTIMATED BY ____ CHECKED BY ____ DESIGNED BY ____

FED ROAD REG. NO.	STATE	CONTRACT NO.	SHEET NO.	TOTAL SHEETS
1	N.Y.	D259214	189	432

BRIDGE REHABILITATION PROJECT (ELEMENT SPECIFIC)
VARIOUS BRIDGES ON INTERSTATE 481
TOWNS OF DEWITT AND CICERO
ONONDAGA COUNTY
P.I.N. 305613 B.I.N. VARIOUS

ESTIMATE OF QUANTITIES BY STRUCTURE

ITEM #	DESCRIPTION	UNIT	1093550		1093561		1093562		1093571		1093572		1093671		1093672	
			EST.	FINAL	EST.	FINAL	EST.	FINAL	EST.	FINAL	EST.	FINAL	EST.	FINAL	EST.	FINAL
203.02 M	UNCLASSIFIED EXCAVATION & DISPOSAL	CM	—		—		—		—		—		—		—	
203.03 M	EMBANKMENT IN PLACE	CM	—		—		—		—		7		—		—	
203.07 M	SELECT GRANULAR FILL	CM	—		—		—		4		10		—		—	
203.1770 M	CLEAN EXISTING PIPE CULVERT	M	—		—		—		4		4		—		—	
203.18 M	CLEANING CLOSED DRAINAGE SYSTEMS	M	34		—		—		256		269		—		—	
203.19 M	CLEAN DRAINAGE STRUCTURES AND MANHOLES	EA	—		—		—		4		6		—		—	
203.21 M	SELECT STRUCTURE FILL	CM	—		—		—		—		—		—		—	
15203.51 M	GRADING, CLEANING AND RESHAPING EXISTING DITCHES	M	—		—		—		70		77		—		—	
206.01 M	STRUCTURE EXCAVATION	CM	—		—		—		—		—		—		—	
206.02 M	TRENCH AND CULVERT EXCAVATION	CM	—		—		—		24		22		—		—	
207.10 M	GEOTEXTILE BEDDING	SM	—		—		—		32		32		—		—	
210.5433 M	REMOVAL AND DISPOSAL OF ASBESTOS CONTAINING CAULKING (BV 12)	LS	—		—		—		NEC		NEC		—		—	
210.9913 M	REMOVAL AND DISPOSAL OF MISC. ASBESTOS CONTAINING MATERIAL BV-12	LS	NEC		—		—		—		—		—		—	
304.15 M	SUBBASE COURSE, OPTIONAL TYPE	CM	—		—		—		—		2		—		—	
402.128201 M	12.5mm F2 SUPERPAVE HMA, 80 SERIES COMPACTION	MT	6		4		5		3		3		5		5	
402.128211 M	PLANT PRODUCTION QUALITY ADJUSTMENT TO ITEM 402.128201M	QU	1		1		1		1		1		1		1	
402.258901 M	25mm F9 SUPERPAVE HMA, 80 SERIES COMPACTION	MT	10		6		8		5		5		8		8	
402.258911 M	PLANT PRODUCTION QUALITY ADJUSTMENT TO 402.258901M	QU	1		1		1		1		1		1		1	
402.378901 M	37.5mm, F9 SUPERPAVE HMA, 80 SERIES COMPACTION	MT	—		—		—		—		—		—		—	
402.378911 M	PLANT PRODUCTION QUALITY ADJUSTMENT TO 402.378901M	QU	—		—		—		—		—		—		—	
407.01 M	TACK COAT	L	22		13		17		12		12		17		17	
490.30 M	MISC. COLD MILLING OF BITUMINUS CONCRETE	SM	61		37		48		31		31		48		48	
502.92 M	SEALING TRANSVERSE JOINTS	M	—		—		—		—		—		—		—	
08520.5014 M	SAWCUT, ASPH, CONC/ASPH, OVERLAY- PCC PAVE	M	41		25		32		21		21		32		32	
552.13 M	TEMPORARY STEEL SHEETING	SM	—		—		—		—		—		—		—	
555.0105 M	CONCRETE FOR STRUCTURES - CLASS A	CM	—		—		—		1		2		—		—	
555.09 M	CONCRETE FOR STRUCTURES, CLASS HP	CM	2		2		2		88		15		2		2	
18555.81 M	STRUCTURAL CRACK SEALING	LM	—		—		—		—		—		—		—	
556.0201 M	UNCOATED BAR REINFORCEMENT FOR CONCRETE STRUCTURES	KG	—		—		—		1975		—		—		—	
556.0202 M	EPOXY COATED REBAR FOR STRUCTURES	KG	137		109		140		2732		613		145		145	
558.01 M	TRANSVERSE SAWCUT GROOVING OF STR SLAB SURF	SM	—		—		12		—		77		—		—	
18559.1696 M	PROTECTIVE SEALER STRUCTURAL CONCRETE	SM	—		—		—		1027		1031		—		—	
18559.1896 M	PROT SEAL STR. CONC. - NEW BRIDGE DECK OVERLAYS	SM	—		—		12		—		77		—		—	
564.0501 M	STRUCTURAL STEEL	LS	—		—		—		—		—		—		—	
565.1522 M	TYPE M.R. EXPANSION BEARING (1001 TO 2000 KN)	EA	—		—		—		8		—		—		—	
565.1722 M	TYPE M.R. FIXED BEARING (1001 TO 2000 KN)	EA	—		—		—		8		—		—		—	
15565.4302 M	BRIDGE BEARING RESTORATION	EA	12		—		—		32		36		—		—	
566.01 M	MODULAR EXPANSION JOINT SYSTEM, ONE-CELL	M	—		—		—		104		115		—		—	
566.02 M	MODULAR EXPANSION JOINT SYSTEM TWO-CELL	M	—		—		—		—		—		—		—	
567.31 M	ARM JNT SYS WI COMPRESSION SEAL - TY A1	M	—		—		—		—		—		—		—	
567.32 M	ARM JNT SYS WI COMPRESSION SEAL - TY A2	M	—		—		—		—		—		—		—	
567.35 M	ARM JNT SYS WI COMPRESSION SEAL - TY A5	M	—		13		17		—		—		17		17	
567.36 M	ARM JNT SYS WI COMPRESSION SEAL - TY A6	M	—		—		—		—		—		—		—	
18567.46 M	ELASTOMERIC CONCRETE FOR BRIDGE JOINT SYSTEMS	M	—		—		—		31		21		—		—	
16567.640001 M	REPLACE COMPRESSION SEAL IN EXISTING BRIDGE JOINTS	M	—		—		—		—		—		—		—	
568.32 M	CEMENT MORTAR PADS	EA	—		—		—		—		—		—		—	
568.50 M	STEEL BRIDGE RAILING (2 RAIL)	M	—		—		—		—		—		—		—	
570.090001 M	ENVIRONMENTAL GROUND PROTECTION	LS	—		—		—		NEC		—		—		—	
570.090002 M	ENVIRONMENTAL GROUND PROTECTION	LS	—		—		—		—		NEC		—		—	
570.090003 M	ENVIRONMENTAL GROUND PROTECTION	LS	—		—		—		—		—		—		—	

ALL DIMENSIONS ARE IN m UNLESS OTHERWISE NOTED

AS BUILT REVISIONS

SIGNATURE DATE

SHEET 10 OF 12

ESTIMATE OF QUANTITIES

STATE OF NEW YORK
DEPARTMENT OF TRANSPORTATION

FILENAME	REGION	DATE	DRAWING NO.
305613J.1A	3	10/02	QE-4A

CHECKED BY
DRAFTED BY
ESTIMATED BY
CHECKED BY
DESIGNED BY
JOB MANAGER
DESIGN SUPERVISOR

FED ROAD REG. NO.	STATE	CONTRACT NO.	SHEET NO.	TOTAL SHEETS
1	N.Y.	D259214	190	432

BRIDGE REHABILITATION PROJECT (ELEMENT SPECIFIC)
VARIOUS BRIDGES ON INTERSTATE 481
TOWNS OF DEWITT AND CICERO
ONONDAGA COUNTY
P.I.N. 305613 B.I.N. VARIOUS

ESTIMATE OF QUANTITIES BY STRUCTURE

ITEM #	DESCRIPTION	UNIT	1093550		1093561		1093562		1093571		1093572		1093671		1093672	
			EST.	FINAL	EST.	FINAL	EST.	FINAL	EST.	FINAL	EST.	FINAL	EST.	FINAL	EST.	FINAL
570.090004 M	ENVIRONMENTAL GROUND PROTECTION	LS	—		—		—		—		—		—		—	
570.100001 M	ENVIRONMENTAL WATERWAY PROTECTION	LS	—		—		—		NEC		—		—		—	
570.100002 M	ENVIRONMENTAL WATERWAY PROTECTION	LS	—		—		—		—		NEC		—		—	
16570.32 M	LOCALIZED PAINTING OF BARE STRUCTURAL STEEL	SM	—		—		—		18		21		—		—	
16570.72 M	LOCALIZED VACUUM CONTAINED CLEANING OF STRUCTURAL STEEL PLANAR SURFACES	SM	—		—		—		18		21		—		—	
16570.76 M	LOCALIZED VACUUM CONTAINED CLEANING OF STRUCTURAL STEEL - IRREGUALR	SM	—		—		—		—		—		—		—	
571.010001 M	TREATMENT AND DISPOSAL OF PAINT REMOVAL WASTE	CM	—		—		—		1		—		—		—	
571.010002 M	TREATMENT AND DISPOSAL OF PAINT REMOVAL WASTE	CM	—		—		—		—		1		—		—	
571.010003 M	TREATMENT AND DISPOSAL OF PAINT REMOVAL WASTE	CM	—		—		—		—		—		—		—	
571.010004 M	TREATMENT AND DISPOSAL OF PAINT REMOVAL WASTE	CM	—		—		—		—		—		—		—	
572.010001 M	STRUCTURAL STEEL PAINT SYSTEM: SHOP APPLIED	SM	—		—		—		1		—		—		—	
572.010002 M	STRUCTURAL STEEL PAINT SYSTEM: SHOP APPLIED	SM	—		—		—		—		1		—		—	
576.2001M	DOWNSPOUT SYSTEM, DUCTILE IRON	M	—		—		—		3		4		—		—	
578.020001 M	OVERLAY CONCRETE - CLASS E	SM	—		—		—		—		—		—		—	
578.020002 M	OVERLAY CONCRETE - CLASS E	SM	—		—		—		—		—		—		—	
578.020003 M	OVERLAY CONCRETE - CLASS E	SM	—		—		—		—		—		—		—	
578.020004 M	OVERLAY CONCRETE - CLASS E	SM	—		—		—		—		77		—		—	
578.020005 M	OVERLAY CONCRETE - CLASS E	SM	—		—		12		—		—		—		—	
578.030001 M	SLAB RECONSTRUCTION CONCRETE - CLASS D OR E	SM	—		—		—		—		—		—		—	
578.030002 M	SLAB RECONSTRUCTION CONCRETE - CLASS D OR E	SM	—		—		—		—		—		—		—	
578.030003 M	SLAB RECONSTRUCTION CONCRETE - CLASS D OR E	SM	—		—		—		—		—		—		—	
578.030004 M	SLAB RECONSTRUCTION CONCRETE - CLASS D OR E	SM	—		—		—		—		77		—		—	
578.030005 M	SLAB RECONSTRUCTION CONCRETE - CLASS D OR E	SM	—		—		12		—		—		—		—	
578.030006 M	SLAB RECONSTRUCTION CONCRETE - CLASS D OR E	SM	—		—		—		—		—		—		—	
578.030007 M	SLAB RECONSTRUCTION CONCRETE - CLASS D OR E	SM	—		—		—		—		—		—		—	
579.02 M	REINFORCING BAR EXPOSURE	SM	—		—		12		—		77		—		—	
580.01 M	REMOVAL OF STRUCTURAL CONCRETE	CM	2		2		2		62		15		2		2	
582.05 M	REMOVE STRUCTURAL CONCRETE WITH CLASS A CONCRETE	CM	16		1		1		43		46		2		5	
582.07 M	REMOVE STRUCTURAL CONCRETE AND REPLACE WITH VERTICAL OVERHEAD PATCH MATERIAL	SM	—		—		—		151		221		—		—	
16584.13 M	RAPID SETTING CONCRETE FOR BRIDGE AND APPROACH SLAB REPAIRS	KG	—		—		—		—		—		—		—	
585.01 M	STRUCTURAL LIFTING OPERATIONS - TYPE A	EA	12		—		—		—		—		—		—	
585.02 M	STRUCTURAL LIFTING OPERATIONS - TYPE B	EA	—		—		—		21		25		—		—	
585.03 M	STRUCTURAL LIFTING OPERATIONS TYPE C	EA	—		—		—		35		35		—		—	
586.01 M	DRILL AND GROUT BOLTS, OR REINFORCING BARS	mm	19200		13050		16650		53700		59100		15600		15600	
17586.18M	DRILLING HOLES IN EXISITING SUBSTRUCTURE	M	—		—		—		—		—		—		—	
16586.200125 M	DRILL AND GROUT ANCHOR BOLTS AND REBAR IN CONCRETE	EA	—		—		—		—		—		—		—	
16586.200216 M	DRILL AND GROUT ANCHOR BOLTS AND REBAR IN CONCRETE	EA	—		—		—		—		—		—		—	
587.01 M	BRIDGE RAILING REMOVAL AND DISPOSAL	M	—		—		—		—		—		—		—	
589.520001 M	REMOVAL OF EXISTING STEEL	EA	—		—		—		4		—		—		—	
589.520002 M	REMOVAL OF EXISTING STEEL	EA	—		—		—		—		6		—		—	
589.520003 M	REMOVAL OF EXISTING STEEL	EA	—		—		—		—		—		—		—	
589.520004 M	REMOVAL OF EXISTING STEEL	EA	—		—		—		—		—		—		—	
589.520005 M	REMOVAL OF EXISTING STEEL	EA	—		—		—		8		—		—		—	
590.01M	VERTICAL ADJUSTMENT OF BRIDGE DRAINAGE DEVICES	EA	—		—		—		7		9		—		—	
603.6001 M	REINFORCED CONCRETE PIPE CLASS III, 300 mm	M	—		—		—		—		4		—		—	
603.7301M	REINFORCED CONCRETE PIPE END SECTION 300 mm DIAMETER	EA	—		—		—		—		3		—		—	

ALL DIMENSIONS ARE IN m UNLESS OTHERWISE NOTED

AS BUILT REVISIONS

SIGNATURE DATE

SHEET 11 OF 12

ESTIMATE OF QUANTITIES

STATE OF NEW YORK
DEPARTMENT OF TRANSPORTATION

FILENAME	REGION	DATE	DRAWING NO.
305613.L1A	3	10/02	QE-4B

DESIGN SUPERVISOR ____ JOB MANAGER ____ DESIGNED BY ____ ESTIMATED BY ____ DRAFTED BY ____ CHECKED BY ____ CHECKED BY ____

FED ROAD REG. NO.	STATE	CONTRACT NO.	SHEET NO.	TOTAL SHEETS
1	N.Y.	D259214	191	432

BRIDGE REHABILITATION PROJECT (ELEMENT SPECIFIC)
VARIOUS BRIDGES ON INTERSTATE 481
TOWNS OF DEWITT AND CICERO
ONONDAGA COUNTY
P.I.N. 305613 B.I.N. VARIOUS

ESTIMATE OF QUANTITIES BY STRUCTURE

ITEM #	DESCRIPTION	UNIT	1093550		1093561		1093562		1093571		1093572		1093671		1093672	
			EST.	FINAL	EST.	FINAL	EST.	FINAL	EST.	FINAL	EST.	FINAL	EST.	FINAL	EST.	FINAL
605.0901 M	UNDERDRAIN FILTER TYPE 1	CM	—		—		—		—		—		—		—	
605.1702 M	OPT. UNDERDRAIN PIPE 150 mm ø	M	—		—		—		—		—		—		—	
606.73 M	REMOVE AND DISPOSE OF BOX BEAM GUIDE RAIL	M	—		—		—		—		—		—		—	
606.8701 M	CORRUGATED BEAM GUIDE RAILING TRANSITION ASSEMBLY, TWO RAIL, STEEL BRIDGE RAILING	EA	—		—		—		2		2		—		—	
16606.80 M	TRANSITION BRIDGE RAILING TO BOX BEAM GUIDE RAIL	M	—		—		—		—		—		—		—	
609.15 M	RESETTING EXISTING CURB	M	—		—		—		—		—		—		—	
610.0203 M	ESTABLISH TURF	SM	—		—		—		100		200		—		—	
612.0205 M	CLASS II TYPE B EROSION CONTROL MATERIAL	SM	—		—		—		100		150		—		—	
08615.0402 M	TREE AND VEGETATION BARRIER	M	—		—		—		150		150		—		—	
620.03 M	STONE FILLING (LIGHT)	CM	—		—		—		6		8		—		—	
625.01 M	SURVEY AND STAKEOUT	LS	—		—		—		—		—		—		—	
637.03 M	CONCRETE CYLINDER CURING BOX	EA	—		—		—		—		—		—		—	
637.0702 M	ENGINEER'S OFFICE TYPE C	MNTH	—		—		—		—		—		—		—	
10637.2101 M	FURN PORTABLE CELLULAR TELEPHONE EQUIP.	LS	—		—		—		—		—		—		—	
08637.3501 M	MICRO COMPUTER SYSTEM	EA	—		—		—		—		—		—		—	
15637.61 M	CPM SCHEDULE	LS	—		—		—		—		—		—		—	
15637.51 M	DIGITAL CAMERA SYSTEM	LS	—		—		—		—		—		—		—	
15637.91 M	CHAMPS MANAGEMENT SYSTEM	LS	—		—		—		—		—		—		—	
15637.98 M	PARTNERING WORKSHOP	LS	—		—		—		—		—		—		—	
640.10 M	WHITE PAINT REFLEC PAVEMENT STRIPES-0.38 mm	M	12		8		9		8		8		9		9	
640.11 M	YELLOW PAINT REFLEC PAVEMENT STRIPES-0.38 mm	M	9		4		6		6		6		6		6	
14646.10 M	MILLED IN AUDIBLE RDWAY DELINS (MIARD)	M	—		—		—		—		—		—		—	
23675.15M	FURNISH AND PLACE STONE BALLAST SURFACING COURSE	MT	—		—		—		—		2		—		—	
91685.0705 M	WHT POLYESTER REFLEC PAVEMENT STRIPE	M	12		8		9		8		8		9		9	
91685.0706 M	YEL POLYESTER REFLEC PAVEMENT STRIPE	M	9		4		6		6		6		6		6	
697.02 M	FIELD CHANGE ORDER	LS	—		—		—						—		—	
699.040001 M	MOBILIZATION	LS	NEC		NEC		NEC		NEC		NEC		NEC		NEC	

STANDARD SYMBOL (PLANS)	ITEM PAYMENT UNIT: ESTIMATE OF QUANTITIES SHEET	EQUIVALENT NOMENCLATURE: SPEC BOOK/PROPOSAL
m	M	METER
m^2	SQM	SQUARE METER
m^3	CM	CUBIC METER
km	KM	KILOMETER
ha	HA	HECTARE
kg	KG	KILOGRAM
t OR Mg*	MT	METRIC TON
L	L	LITER

* THE METRIC TON IS EQUIVALENT TO ONE MEGAGRAM (Mg)

ALL DIMENSIONS ARE IN m UNLESS OTHERWISE NOTED

AS BUILT REVISIONS

SIGNATURE DATE

SHEET 12 OF 12

ESTIMATE OF QUANTITIES

STATE OF NEW YORK
DEPARTMENT OF TRANSPORTATION

FILENAME	REGION	DATE	DRAWING NO.
305613L1A	3	10/02	QE-4C

CHECKED BY ____ DRAFTED BY ____ ESTIMATED BY ____ CHECKED BY ____ DESIGNED BY ____ JOB MANAGER ____ DESIGN SUPERVISOR ____

FED ROAD REG. NO.	STATE	CONTRACT NO.	SHEET NO.	TOTAL SHEETS
1	N.Y.	D259214	280	432

BRIDGE REHABILITATION PROJECT (ELEMENT SPECIFIC)
VARIOUS BRIDGES ON INTERSTATE 481
TOWNS OF DEWITT AND CICERO
ONONDAGA COUNTY
P.I.N. 305613 | B.I.N. 1093561 & 1093562

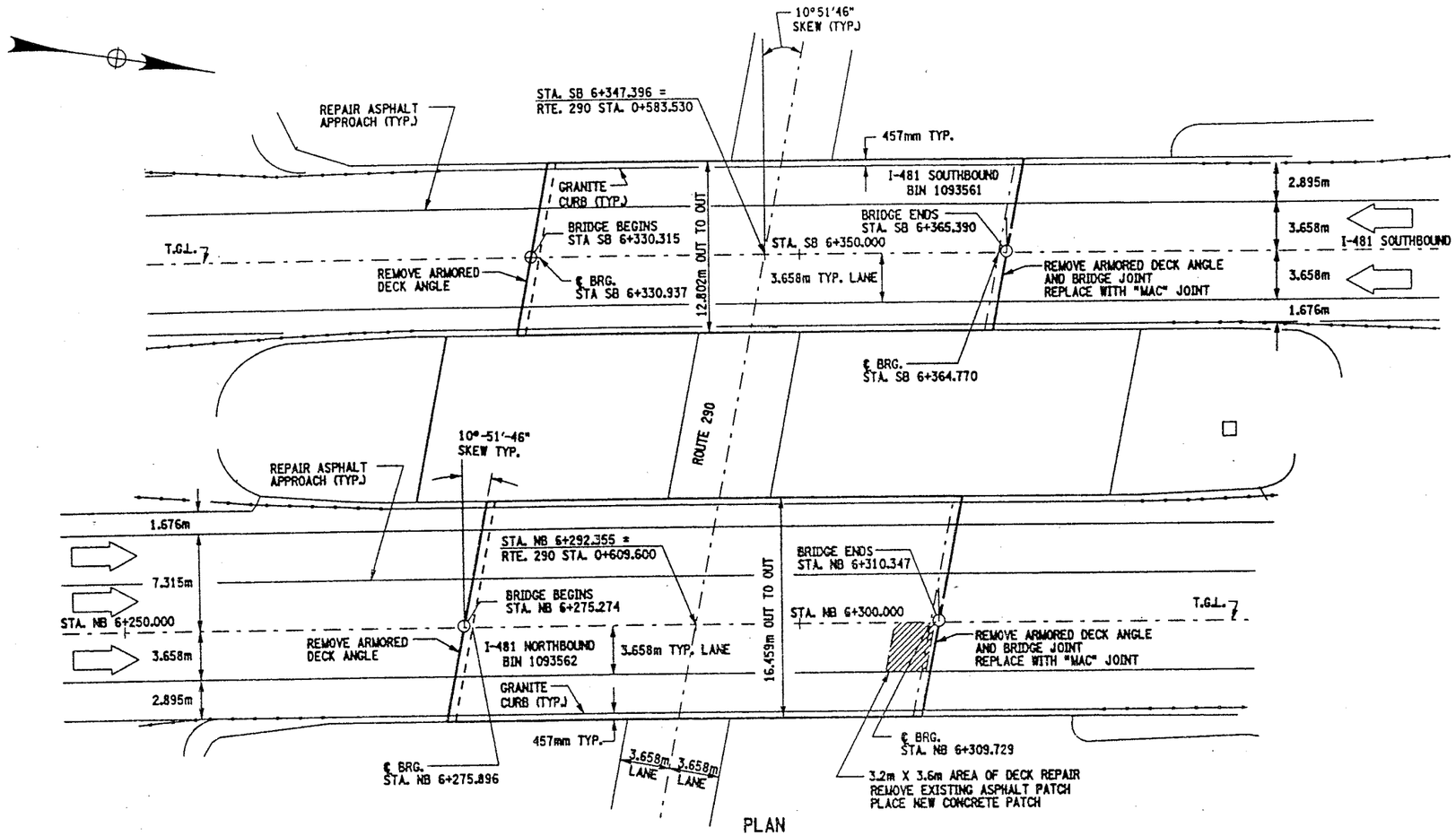

PLAN
SCALE: 1:200

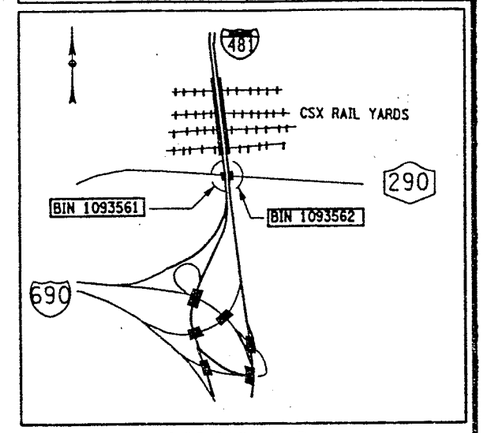

LOCATION MAP
NOT TO SCALE

WORK TO BE DONE ON BIN 1093561 (NOT NECESSARILY IN THIS ORDER)

1. ESTABLISH MP&T SCHEME FOR STAGE CONSTRUCTION.
2. REMOVE EXISTING BRIDGE JOINT, END ABUTMENT (NORTH), TO INCLUDE REMOVAL OF THE ARMORING DECK ANGLE.
3. REMOVE EXISTING ARMORING DECK ANGLE AT BEGINNING ABUTMENT, (SOUTH).
4. INSTALL PROPOSED BRIDGE JOINT AT END ABUTMENT, ("MAC" JOINT).
5. REPAIR DECK AREA AT BEGINNING ABUTMENT WHERE THE ARMORING DECK ANGLE WAS REMOVED.
6. PERFORM MINOR REPAIRS TO ASPHALT APPROACHES.
7. PERFORM MISCELLANEOUS REPAIRS TO CONCRETE ELEMENTS AT BOTH ABUTMENTS.

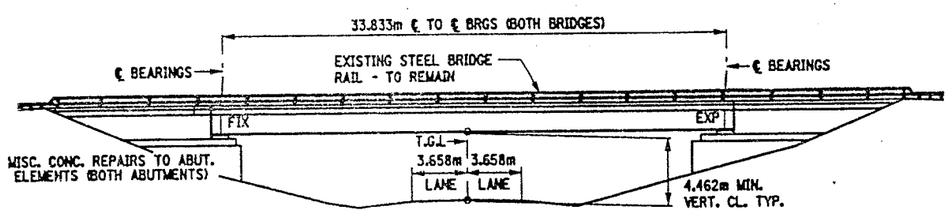

ELEVATION
SCALE: 1:200

NOTES:

SEE DWG. TS16-1 FOR WORK TO BE DONE ON BIN 1093562.

"MAC" JOINT IS A MODIFIED ARMORED JOINT SYSTEM WITH COMPRESSION SEAL.

UTILITIES BELONGING TO 'NEWCHANNEL CORP.' AND ELECTRIC UTILITIES IN VICINITY OF THESE STRUCTURES. SEE INFORMATION AVAILABLE TO BIDDERS FOR ADDITIONAL DETAILS.

BIN 1093561 SOUTHBOUND
BIN 1093562 NORTHBOUND

ALL DIMENSIONS ARE IN m UNLESS OTHERWISE NOTED

AS BUILT REVISIONS

SIGNATURE | DATE

INTERSTATE 481
OVER
ROUTE 290

PLAN, ELEVATION AND BRIDGE SECTION

STATE OF NEW YORK
DEPARTMENT OF TRANSPORTATION

FILENAME	REGION	DATE	DRAWING NO.
305613AG.G1A	3	10/02	GP16-1

DESIGN SUPERVISOR ____ JOB MANAGER ____ DESIGNED BY ____ ESTIMATED BY ____ DRAFTED BY ____ CHECKED BY ____ CHECKED BY ____

FED ROAD REG. NO.	STATE	CONTRACT NO.	SHEET NO.	TOTAL SHEETS
1	N.Y.	D259214	281	432

BRIDGE REHABILITATION PROJECT (ELEMENT SPECIFIC)
VARIOUS BRIDGES ON INTERSTATE 481
TOWNS OF DEWITT AND CICERO
ONONDAGA COUNTY
P.I.N. 305613 B.I.N. 1093561 & 1093562

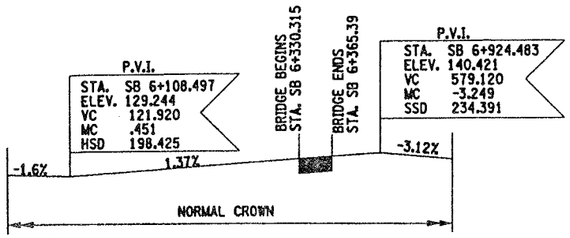

PROFILE
1093561 SB
NOT TO SCALE

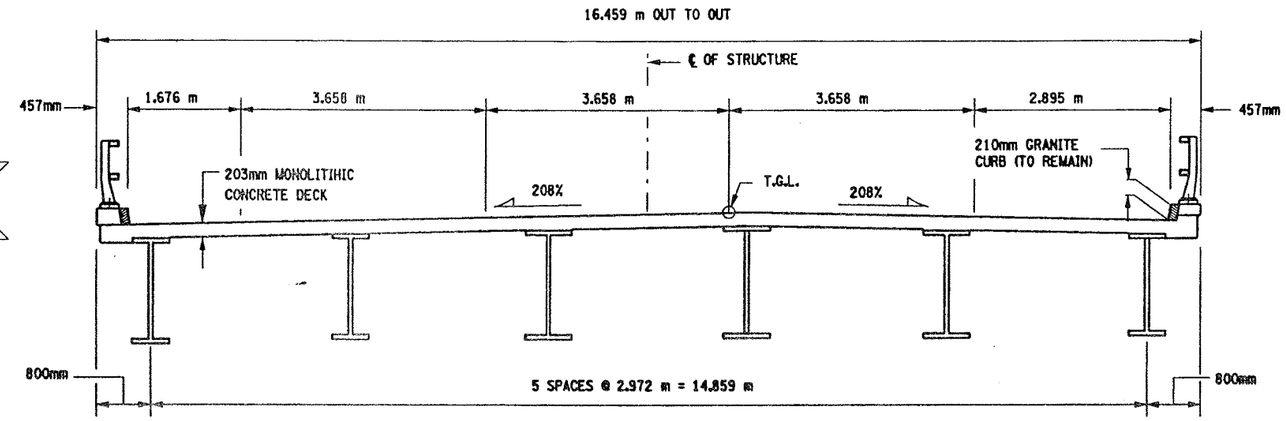

SECTION
1093562 NB
NOT TO SCALE

GENERAL NOTES:

SEE DWG. GP16-1 FOR WORK TO BE DONE ON BIN 1093561.

"MAC" JOINT IS A MODIFIED ARMORED JOINT SYSTEM WITH COMPRESSION SEAL.

UTILITIES BELONGING TO 'NEWCHANNEL CORP.' AND ELECTRIC UTILITIES IN VICINITY OF THESE STRUCTURES. SEE INFORMATION AVAILABLE TO BIDDERS FOR ADDITIONAL DETAILS.

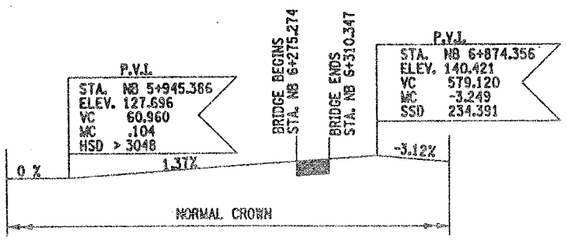

PROFILE
1093562 NB
NOT TO SCALE

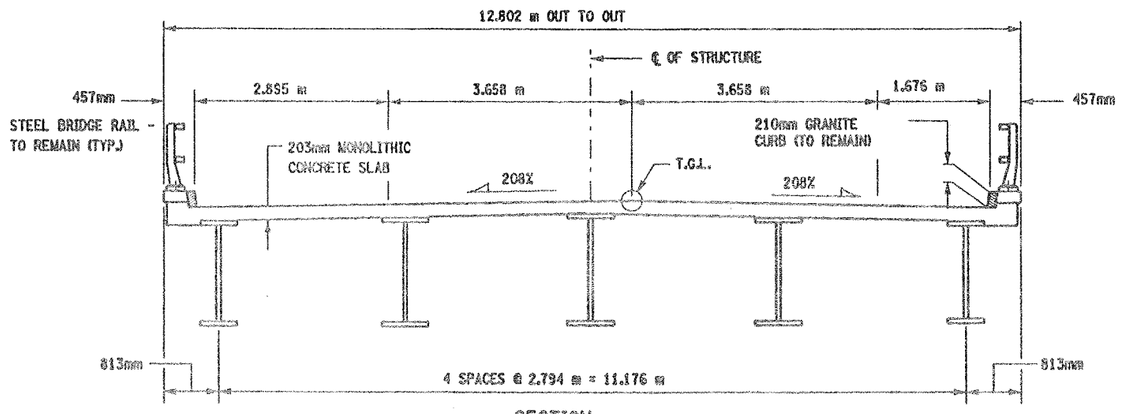

SECTION
1093561 SB
NOT TO SCALE

WORK TO BE DONE ON BIN 1093562- (NOT NECESSARILY IN THIS ORDER)

1. ESTABLISH MP&T SCHEME FOR STAGE CONSTRUCTION.
2. REMOVE EXISTING BRIDGE JOINT, END ABUTMENT (NORTH), TO INCLUDE REMOVAL OF THE ARMORING DECK ANGLE.
3. REMOVE EXISTING ARMORING DECK ANGLE AT BEGINNING ABUTMENT, (SOUTH).
4. INSTALL PROPOSED BRIDGE JOINT AT END ABUTMENT, ("MAC" JOINT).
5. REPAIR DECK AREA AT BEGINNING ABUTMENT WHERE THE ARMORING DECK ANGLE WAS REMOVED.
6. PERFORM MINOR REPAIRS TO ASPHALT APPROACHES.
7. PERFORM MISCELLANEOUS REPAIRS TO CONCRETE ELEMENTS AT BOTH ABUTMENTS.
8. REMOVE EXISTING BRIDGE DECK ASPHALT PATCH.
9. PLACE NEW CONCRETE BRIDGE DECK PATCH.

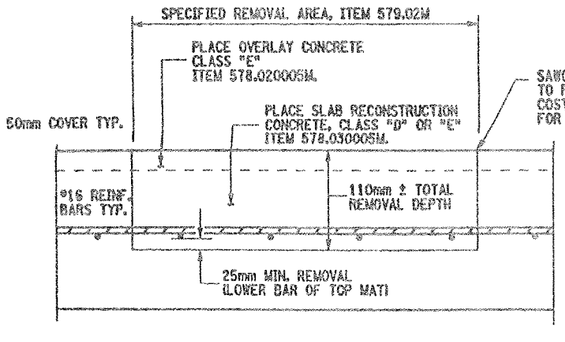

CROSS SECTION VIEW THROUGH REPAIR LOCATION

NOT TO SCALE

DECK REPAIR NOTES:

THIS LOCATION IS CURRENTLY FILLED WITH ASPHALT (BLACKTOP). DEPTH OF ASPHALT IS UNKNOWN, ESTIMATED AT @ 36mm. THE REMOVAL OF THE ASPHALT AND CONCRETE TO LIMITS SHOWN TO BE PAID UNDER ITEM 579.02M.

REMOVE CONCRETE TO LIMITS SHOWN AND TO SOUND CONCRETE AS ORDER BY ENGINEER.

THE AREA THAT IS REPAIRED SHALL ALSO RECEIVE:

ITEM 558.01M - TRANSVERSE SAWCUT GROOVING
ITEM 18559.1896M - PROTECTIVE SEALING

THE AREA SHOWN IS THE RESULT OF FIELD INVESTIGATION AND IS AN APPROXIMATE AREA. THE ACTUAL LIMITS SHALL BE AS DIRECTED BY ENGINEER.

NO FULL DEPTH SLAB REPAIR IS EXPECTED AT THIS LOCATION.

REFER TO DRAWING NO. GN-1 FOR SERIALIZED ITEM NOTES.

ITEMS USED:

ITEM 558.01M - TRANSVERSE SAWCUT GROOVING (SM)
ITEM 18559.1896M - PROTECTIVE SEALING FOR STRUCT. CONC. (SM)
ITEM 578.020005M - OVERLAY CONCRETE, CLASS "E" (SM)
ITEM 578.030005M - SLAB RECONSTRUCTION CONCRETE, CLASS "D" OR "E" (SM)
ITEM 579.02M - REINFORCING BAR EXPOSURE (SM)

ALL DIMENSIONS ARE IN m UNLESS OTHERWISE NOTED

AS BUILT REVISIONS

SIGNATURE DATE

INTERSTATE 481
OVER
ROUTE 290

TYPICAL BRIDGE SECTION AND PROFILE

STATE OF NEW YORK
DEPARTMENT OF TRANSPORTATION

FILENAME	REGION	DATE	DRAWING NO.
305613AG.G1A	3	10/02	TS16-1

DESIGN SUPERVISOR ____ JOB MANAGER ____ DESIGNED BY ____ ESTIMATED BY ____ DRAFTED BY ____ CHECKED BY ____ CHECKED BY ____

FED ROAD REG. NO.	STATE	CONTRACT NO.	SHEET NO.	TOTAL SHEETS
1	N.Y.	D259214	282	432

BRIDGE REHABILITATION PROJECT (ELEMENT SPECIFIC)

VARIOUS BRIDGES ON INTERSTATE 481

TOWNS OF DEWITT AND CICERO

ONONDAGA COUNTY

P.I.N. 305613 | B.I.N. 1093561

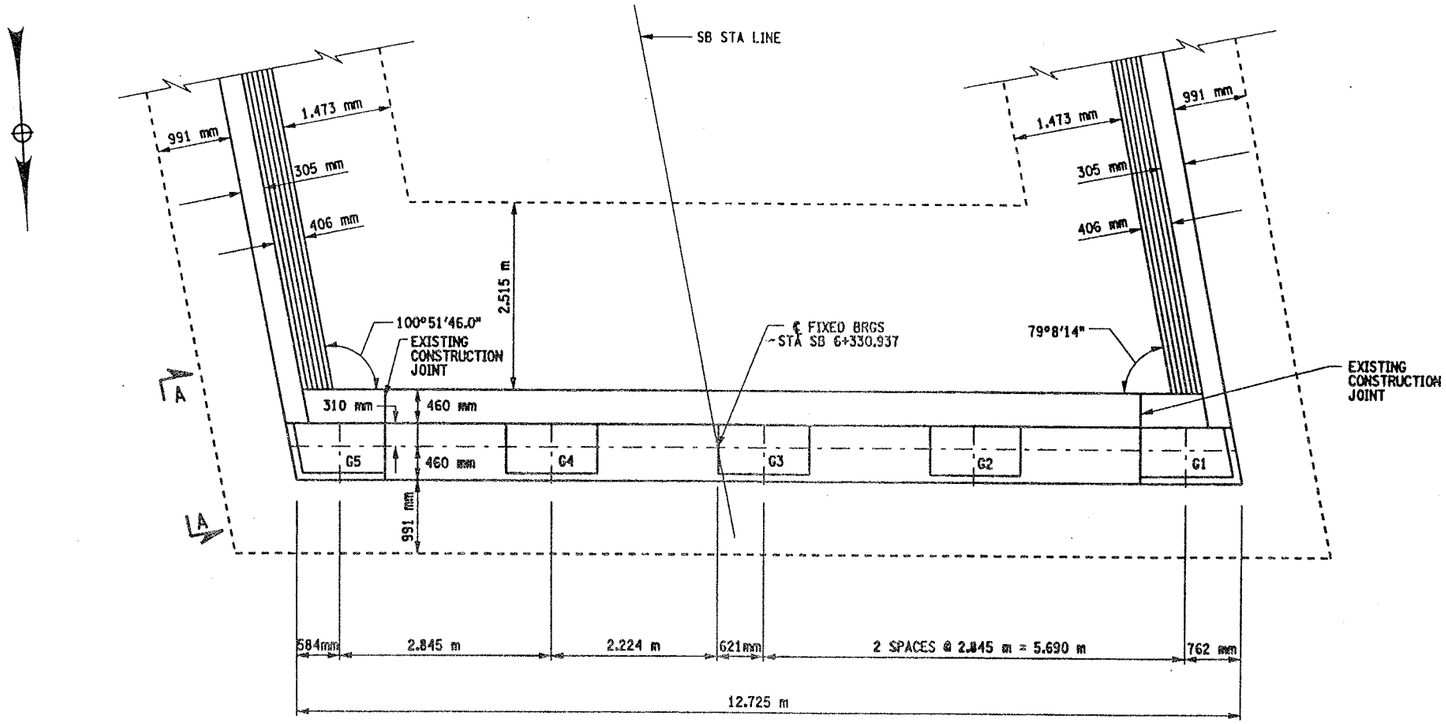

PLAN

SCALE 1:40

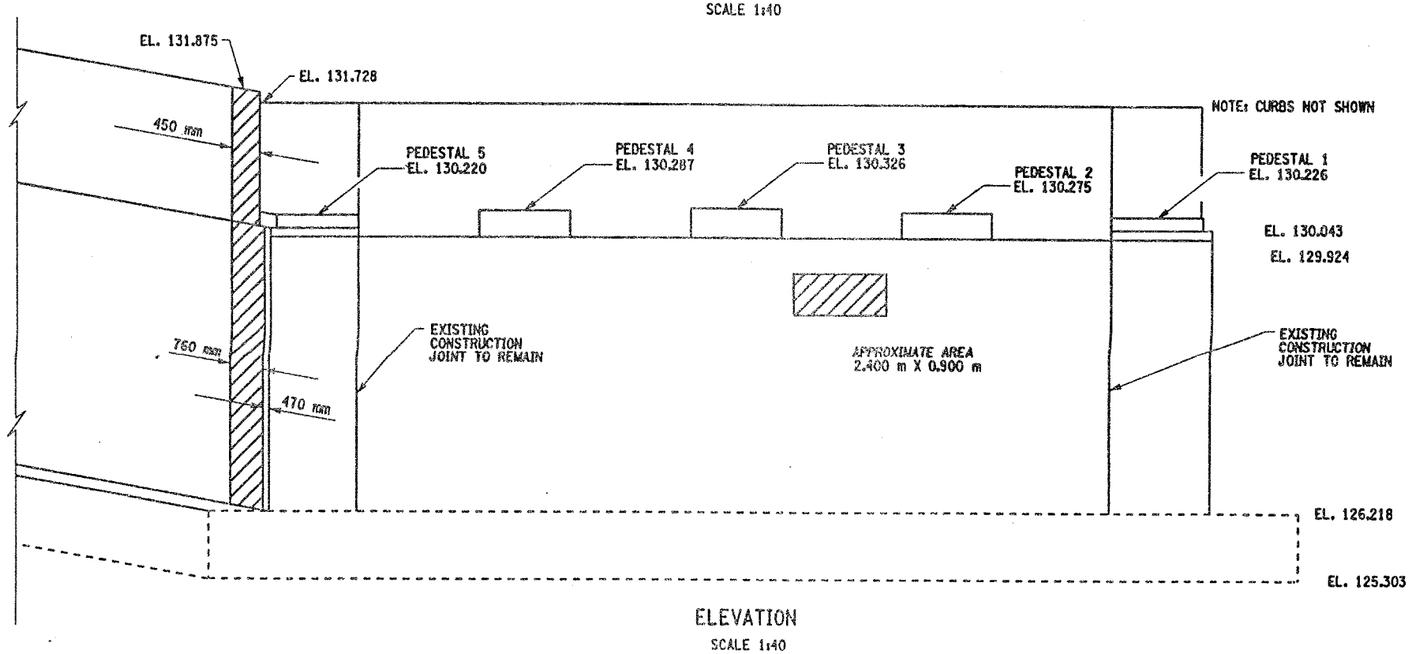

ELEVATION

SCALE 1:40

NOTES:

1. ALL DIMENSIONS SHOWN FOR CONCRETE REMOVAL ARE APPROXIMATE AND SHALL BE FIELD VERIFIED BY THE CONTRACTOR AND EIC.
2. REMOVE CONCRETE TO LIMITS SHOWN AS WELL AS TO SOUND CONCRETE, A.O.B.E.
3. WHEN REMOVING EXISTING CONCRETE, SAWCUT 5 mm MIN. TO PRODUCE NEAT REMOVAL LINES. ANY COST TO BE INCLUDED IN THE BID PRICE FOR ITEM 582.05M.
4. ALL EXISTING REINFORCEMENT TO REMAIN.
5. ELEVATIONS ARE GIVEN FOR QUANTITIY ESTIMATES ONLY.
6. REFER TO CONTRACT FISH 70-7 FOR ORIGINAL CONSTRUCTION DETAILS AND D251436 FOR ADDITIONAL DETAILS.
7. FOR REMOVAL DETAIL SEE DWG. AB16-2.

AREAS OF PROPOSED WORK: ITEM 582.05M REMOVAL OF STRUCTURAL CONCRETE-REPLACEMENT WITH CLASS A CONCRETE

LIST OF ITEMS USED:

ITEM 582.05M - REMOVAL OF STRUCTURAL CONCRETE REPLACEMENT WITH CLASS A CONCRETE (CM)

ALL DIMENSIONS ARE IN m UNLESS OTHERWISE NOTED

AS BUILT REVISIONS

SIGNATURE DATE

INTERSTATE 481 SB
OVER
ROUTE 290
SOUTH ABUTMENT
PLAN AND ELEVATION

STATE OF NEW YORK
DEPARTMENT OF TRANSPORTATION

FILENAME	REGION	DATE	DRAWING NO.
305613AG.A1B	3	10/02	AB16-1

DESIGN SUPERVISOR ____ JOB MANAGER ____ DESIGNED BY ____ ESTIMATED BY ____ DRAFTED BY ____ CHECKED BY ____ CHECKED BY ____

FED ROAD REG. NO.	STATE	CONTRACT NO.	SHEET NO.	TOTAL SHEETS
1	N.Y.	D259214	363	432

BRIDGE REHABILITATION PROJECT (ELEMENT SPECIFIC)
VARIOUS BRIDGES ON INTERSTATE 481
TOWNS OF DEWITT AND CICERO
ONONDAGA COUNTY
P.I.N. 305613 | B.I.N. ALL BINS

BRIDGE JOINT TABLE

B.I.N. NUMBER	JOINT LOCATION	JOINT SKEW	SPAN(S) LENGTH FOR JOINT (METERS)	JOINT BEND LOCAT'N RT	JOINT BEND LOCAT'N LT	EXISTING JOINT TYPE	PROPOSED JOINT TYPE	CURB TO CURB DISTANCE (METERS) (SEE NOTES)	FASCIA & MEDIAN LENGTH (METERS) LT/RT	TOTAL LENGTH (METERS)	JOIINT ITEM NUMBER(S)	DRAWING NUMBER SECT VIEW	DRAWING NUMBER PLAN VIEW	DRAWING NUMBER FASCIA DETAIL
1093520	WEST ABUT.	10°-00'-00"	——	N	N	ADA	——	9.286	.464/.464	10.214	——	JD-47	——	JD-47
	EAST ABUT.	3°-00'-00"	39.014	N	N	ACJ/ADA	RCS	9.157	.458/.458	10.073	16567.64M	JD-47	——	JD-47
1093540	WEST ABUT.	3°-00'-00"	——	N	N	ACJ/ADA	RCS	9.157	.458/.458	10.073	16567.64M	JD-47	——	JD-47
	EAST ABUT.	3°-00'-00"	35.662	N	N	ADA	——	9.157	.458/.458	10.073	——	JD-47	——	JD-47
1093550	SOUTH ABUT.	51°-00'-00"	——	N	N	OPEN/ADA	RADA	18.890	.726/.726	20.342	——	JD-49	JD-48	——
	NORTH ABUT.	51°-00'-00"	45.750	N	N	ADA	RADA	18.890	.726/.726	20.342	——	JD-49	JD-48	——
1093561	SOUTH ABUT.	10°-51'-46"	——	N	N	ADA	RADA	12.104	.465/.465	13.034	——	JD-51	JD-50	JD-52
	NORTH ABUT.	10°-51'-46"	33.832	N	N	ACJ/ADA	MAC-5	12.104	.465/.465	13.034	567.35M	JD-51	JD-50	JD-52
1093562	SOUTH ABUT.	10°-51'-46"	——	N	N	ADA	RADA	15.828	.465/.465	16.758	——	JD-51	JD-50	JD-52
	NORTH ABUT.	10°-51'-46"	33.832	N	N	ACJ/ADA	MAC-5	15.828	.465/.465	16.758	567.35M	JD-51	JD-50	JD-52
1093571	SOUTH ABUT.	8°-43'-42"	26.212	N	N	ACJ/ADA	MOD-1	10.330	.616/.616	11.562	566.01M	JD-55	JD-53	JD-56
	PIER 1	8°-43'-42"	46.939	N	N	OPEN	NONE	10.330	.616/.616	11.562	——	JD-56	——	——
	PIER 2	8°-43'-42"	51.511	N	N	OPEN	NONE	10.330	.616/.616	11.562	——	JD-56	——	——
	PIER 3	8°-43'-42"	59.740	N	N	OPEN	NONE	10.330	.616/.616	11.562	——	——	——	——
	PIER 4	8°-43'-42"	59.740	N	N	OPEN	NONE	10.330	.616/.616	11.562	——	——	——	——
	PIER 5	8°-43'-42"	59.740	N	N	OPEN	NONE	10.330	.616/.616	11.562	——	——	——	——
	PIER 6	8°-43'-42"	37.490	N	N	ACJ	MOD-1	10.330	.616/.616	11.562	566.01M	JD-55	JD-54	JD-56
	PIER 7	8°-43'-42"	37.490	N	N	ACJ	MOD-1	10.330	.616/.616	11.562	566.01M	JD-55	JD-54	JD-56
	PIER 8	8°-43'-42"	37.490	N	N	ACJ	MOD-1	10.330	.616/.616	11.562	566.01M	JD-55	JD-54	JD-56
	PIER 9	8°-43'-42"	44.196	N	N	OPEN	NONE	10.330	.616/.616	11.562	——	JD-56	——	——
	PIER 10	0°-00'-00"	37.643	N	N	ACJ	MOD-1	10.210	.610/.610	11.430	566.01M	JD-55	JD-54	JD-56
	PIER 11	0°-00'-00"	37.643	N	N	ACJ	MOD-1	10.210	.610/.610	11.430	566.01M	JD-55	JD-54	JD-56
	PIER 12	0°-00'-00"	37.643	N	N	ACJ	MOD-1	10.210	.610/.610	11.430	566.01M	JD-55	JD-54	JD-56
	PIER 13	0°-00'-00"	37.643	N	N	ACJ	MOD-1	10.210	.610/.610	11.430	566.01M	JD-55	JD-54	JD-56
	PIER 14	0°-00'-00"	37.643	N	N	ACJ	MOD-1	10.210	.610/.610	11.430	566.01M	JD-55	JD-54	JD-56
	NORTH ABUT.	0°-00'-00'	——	N	N	ADA	RADA	10.210	.610/.610	11.430	——	JD-55	JD-54	——

LEGEND

EXISTING JOINT TYPE:

ACJ = ARMORED COMPRESSION JOINT SYSTEM
MOD = MODULAR JOINT SYSTEM
MAC = MODIFIED ARMORED COMPRESSION SYSTEM (NO HORIZ. ARMORING ANGLE)
ADA = ARMORED DECK ANGLE
SS = STRIP SEAL JOINT
OPEN = OPEN JOINT

PROPOSED JOINT TYPE:

MAC-1 = MOD. ARM./COMP. SEAL JT. SYS. (A-1)
MAC-2 = MOD. ARM./COMP. SEAL JT. SYS. (A-2)
MAC-5 = MOD. ARM./COMP. SEAL JT. SYS. (A-5)
MAC-6 = MOD. ARM./COMP. SEAL JT. SYS. (A-6)
RCS = REPLACE EXISTING COMPRESSION SEAL
RADA = REMOVE ARMOR DECK ANGLE
MOD-1 = MODULAR JT. SYS. (ONE-CELL)
MOD-2 = MODULAR JT. SYS. (TWO-CELL)

JOINT BEND LOCATION:

N = NO BENDS
CRB = CURB LINE
PAV'T = PAVEMENT

GENERAL NOTES:

- ALL MEASUREMENTS SHALL BE FIELD VERIFIED.
- CURB TO CURB LENGTHS ARE MEASURED ALONG ℄ OF JOINT.
- MULTIPLE DIMENSIONS ARE SHOWN LOOKING UP-STATION, LEFT TO RIGHT.
- ALL DIMENSIONS ARE SHOWN IN METERS.

INFORMATIONAL NOTES:

BDN 1093550 & 1093571

CLEAN EXISTING DRAINAGE SYSTEMS AT OPEN JOINTS (OPEN JOINTS TO REMAIN). AS SHOWN ON CONTRACT PLANS OR AS DIRECTED BY THE ENGINEER.

FOR JOINT DETAILS REFER TO THE FOLLOWING DRAWINGS;

DWG. NO. JD-1 - MODIFIED ARMORED COMPRESSION SEAL JOINT SYSTEM.
DWG. NO. JD-24 - ONE-CELL MODULAR JOINT SYSTEM.
DWG. NO. JD-25 - TWO-CELL MODULAR JOINT SYSTEM.

LIST OF BRIDGE JOINT ITEMS USED:

ITEM 566.01M - MODULAR EXP. JOINT SYSTEM ONE-CELL (M)
ITEM 566.02M - MODULAR EXP. JOINT SYSTEM TWO-CELL (M)
ITEM 567.31M - MODIFIED ARMORED JOINT SYSTEM W/ COMP. SEAL TYPE A1 (m)
ITEM 567.32M - MODIFIED ARMORED JOINT SYSTEM W/ COMP. SEAL TYPE A2 (m)
ITEM 567.35M - MODIFIED ARMORED JOINT SYSTEM W/ COMP. SEAL TYPE A5 (m)
ITEM 567.36M - MODIFIED ARMORED JOINT SYSTEM W/ COMP. SEAL TYPE A6 (m)
ITEM 16567.640001M - REPLACE COMPRESSION SEAL FOR EXISTING BRIDGE JOINTS (m)
ITEM 580.01M - REMOVAL OF STRUCT. CONC. (CM)

ALL DIMENSIONS ARE IN m UNLESS OTHERWISE NOTED

AS BUILT REVISIONS

SIGNATURE | DATE

INTERSTATE 481 VARIOUS BRIDGES

BRIDGE JOINT TABLE

STATE OF NEW YORK
DEPARTMENT OF TRANSPORTATION

FILENAME	REGION	DATE	DRAWING NO.
305613AJ.JA1	3	10/02	JT-3

CHECKED BY
DRAFTED BY
ESTIMATED BY
CHECKED BY
DESIGNED BY
JOB MANAGER
DESIGN SUPERVISOR

FED ROAD REG. NO.	STATE	CONTRACT NO.	SHEET NO.	TOTAL SHEETS
1	N.Y.	D259214	365	432

BRIDGE REHABILITATION PROJECT (ELEMENT SPECIFIC)
VARIOUS BRIDGES ON INTERSTATE 481
TOWNS OF DEWITT AND CICERO
ONONDAGA COUNTY
P.I.N. 305613 B.I.N. ALL BIN'S

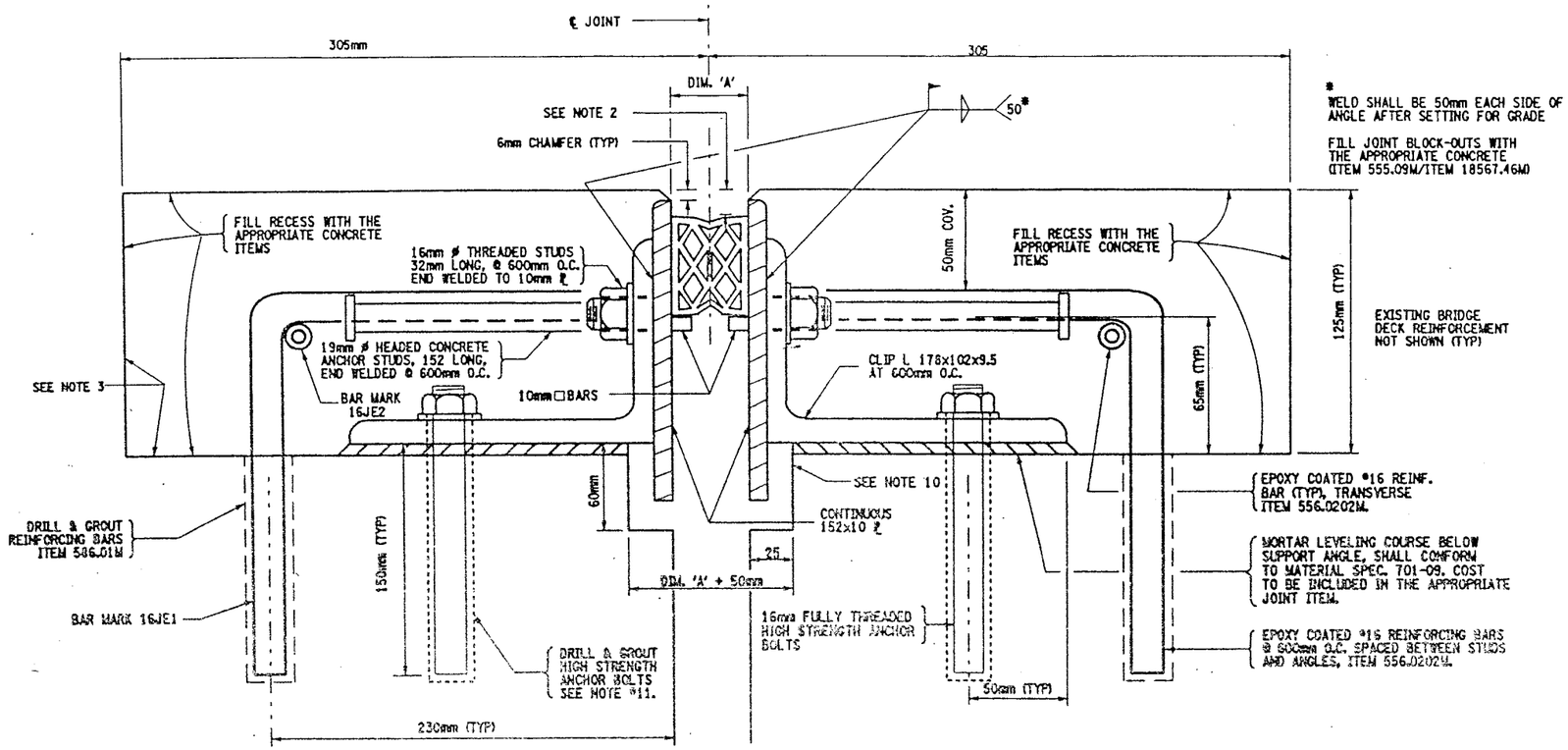

* WELD SHALL BE 50mm EACH SIDE OF ANGLE AFTER SETTING FOR GRADE

FILL JOINT BLOCK-OUTS WITH THE APPROPRIATE CONCRETE (ITEM 555.09M/ITEM 18567.46M)

MODIFIED ARMORED COMPRESSION JOINT DETAIL

FOR INSTALLATION LOCATIONS SEE JOINT TABLE

NOT TO SCALE

GENERAL NOTES:

1. THE TEMPERATURE OF THE BRIDGE MUST BE TAKEN ON THE STRUCTURAL STEEL SURFACE TO DETERMINE THE TEMPERATURE CORRECTION FOR THE JOINT OPENINGS.
2. THIS DEPTH SHALL BE INDICATED ON THE SHOP DRAWINGS AND SHALL BE SUCH THAT WHEN THE SEAL IS COMPRESSED TO 50% OF ITS NORMAL WIDTH, THE TOP OF THE SEAL SHALL BE NOT LESS THAN 6mm NOR MORE THAN 19mm BELOW THE TOP OF THE ROADWAY.
3. RECESSES RECEIVING ITEM 555.09M. AFTER SURFACE PREPARATION, THOROUGHLY WET THE CONCRETE SURFACE AND ALL POROUS SURFACES TO BE IN CONTACT WITH NEW CONCRETE, FOR 12 HOURS. NOTE THE USE OF MATERIAL SPECIF. 705-22 PORTLAND CEMENT MORTAR BONDING GROUT HAS BEEN ELIMINATED, SEE INSERT IN PROJECT PROPOSAL.
4. A WATER-TIGHT INTEGRITY TEST SHALL BE PERFORMED BY THE CONTRACTOR AT ALL COMPRESSION SEAL JOINT INSTALLATIONS. THE FOLLOWING TEST PARAMETERS SHALL BE INCORPORATED IN THE TEST:
   1. A 15 MINUTE MINIMUM PERIOD OF STANDING WATER, WITH A 25mm MINIMUM DEPTH SHALL BE USED.
   2. IN ADDITION, IN LOCATIONS OF COPED AREAS OF THE SEAL, BENDS, ETC., WATER PRESSURE SHALL BE APPLIED, TO THE SATISFACTION OF THE EIC FOR A 15 MINUTE PERIOD.
   3. LIMITS OF TEST AREA SHALL BE FROM FACE OF CURB TO FACE OF CURB ON THE DECK SURFACE.
5. NO PAYMENT WILL BE MADE TO THE CONTRACTOR FOR THE JOINT IF, IN THE OPINION OF THE ENGINEER, THE INSTALLED JOINT LEAKS WITHIN THE 15 MINUTE TEST PERIOD.
6. PRIOR TO THE START OF WORK AT EACH JOINT, THE CONTRACTOR SHALL SUBMIT A WRITTEN PLAN FOR THE SPECIFICS OF THE TESTING, INCLUDING CONTAINMENT OF THE WATER AND THE METHOD TO BE USED FOR ACCESS BY THE E.I.C. TO THE BOTTOM OF THE JOINT BEING TESTED.
7. THE COST OF ALL LABOR, EQUIPMENT AND MATERIALS REQUIRED FOR THE TESTING WHICH INCLUDES, BUT IS NOT LIMITED TO:
   1. A CONTAINMENT SYSTEM FOR THE TEST WATER.
   2. PROVISIONS FOR E.I.C. ACCESS TO THE BOTTOM OF THE JOINT.
   SHALL BE INCLUDED IN THE PRICE BID FOR THE RESPECTIVE JOINT ITEMS.
8. THE COST OF ALL LABOR, EQUIPMENT, AND MATERIALS TO INSTALL THE NEW JOINT SHALL BE INCLUDED IN THE UNIT PRICE BID FOR THE APPROPRIATE JOINT ITEM.
9. MORTAR LEVELING COURSE SHALL CONFORM TO MATERIAL SPECIFICATION 701-09 AND SHALL BE INCLUDED IN THE PRICE BID FOR THE APPROPRIATE JOINT ITEM.
10. THE DIMENSIONS OF THE REMOVAL AREA UNDER THE 152x10 PLATES ARE SHOWN TO ALLOW SPACE FOR THE PLATES TO REST FREELY. IF THERE IS ALREADY ADEQUATE SPACE, NO CONCRETE REMOVAL OR REPLACEMENT IS REQUIRED IN THIS AREA.
11. 16 mm ø ASTM A325M ANCHOR BOLT TO BE DRILLED AND GROUTED IN PLACE IN ACCORDANCE WITH THE REQUIREMENTS OF SUB-SECTION 586-3.02. GROUTING MATERIALS SHALL BE IN ACCORDANCE WITH MATERIALS SUB-SECTION 701-07 ANCHORING MATERIALS-CHEMICALLY CURING. HOLES TO BE DRILLED TO THE DIAMETER AND DEPTH RECOMMENDED BY THE MANUFACTURER OF THE GROUTING MATERIAL (MIN. DEPTH OF 150 mm). THE COST OF THE ANCHORS, INCLUDING DRILLING AND GROUTING, SHALL BE INCLUDED IN THE UNIT PRICE BID FOR THE APPROPRIATE JOINT SYSTEM ITEM.
12. IT IS DESIRABLE TO HAVE THE ARMORED JOINT WITH ITS COMPRESSION SEAL ASSEMBLED IN THE SHOP AND DELIVERED TO THE JOB SITE ALL SET FOR INSTALLATION IN ITS PREFORMED RECESS IN THE STRUCTURAL SLAB. IN CASES WHERE THE ARMORED JOINT CANNOT BE ASSEMBLED IN THE SHOP, DUE TO ITS EXCESSIVE LENGTH CAUSING SHIPPING PROBLEMS, THE JOINT SHALL BE SEALED WITH THE COMPRESSION SEAL BEFORE THE STRUCTURE IS OPENED TO TRAFFIC INCLUDING CONSTRUCTION TRAFFIC, AND BEFORE DIS CONTINUING OPERATIONS WHEN WORK IS SUSPENDED DURING THE WINTER.

ALL DIMENSIONS ARE IN mm UNLESS OTHERWISE NOTED

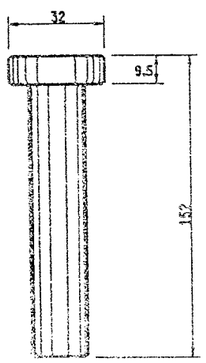

DETAIL OF HEADED CONCRETE ANCHOR STUD

NOT TO SCALE

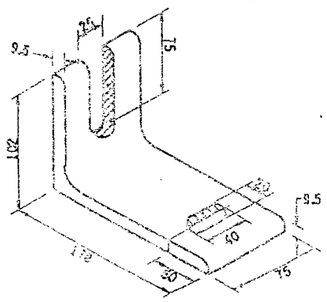

DETAIL OF CLIP ANGLE

NOT TO SCALE

NOTE:

ALL CUTTING TO BE DONE WITH A COPING SAW, SOAP AND WATER

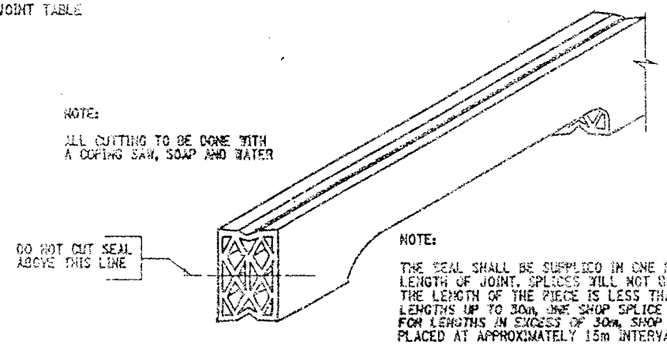

NOTE:

THE SEAL SHALL BE SUPPLIED IN ONE PIECE FOR THE FULL LENGTH OF JOINT. SPLICES WILL NOT BE PERMITTED WHEN THE LENGTH OF THE PIECE IS LESS THAN 15m. FOR LENGTHS UP TO 30m, ONE SHOP SPLICE WILL BE PERMITTED. FOR LENGTHS IN EXCESS OF 30m, SHOP SPLICES MAY BE PLACED AT APPROXIMATELY 15m INTERVALS.

DETAIL FOR CUTTING SEAL

NOT TO SCALE

EPOXY POLYSULFIDE GROUT NOTE:

CONTRACTOR MAY WITH THE APPROVAL OF THE ENGINEER USE MATERIAL SPECIFICATION 721-03 EPOXY POLYSULFIDE GROUT, AT THE RECESSES. INSTEAD OF THE 12 HOUR CONTINUOUS PREWETTING REQUIREMENTS (PROJECT PROPOSAL). CONTRACTOR MUST ENSURE PROPER CONSTRUCTION PRACTICES ARE FOLLOWED WHEN USING THIS GROUT. THE USE OF EPOXY POLYSULFIDE GROUT SHALL BE AT NO ADDITIONAL COST TO THE STATE.

SEALS (mm)			ARMORED JOINT SYSTEM	
TYPE	NOMINAL WIDTH	DIM. "A" @ 20°C.	TYPE	END CONDITION
1	44	25	A1	Fixed End Only
2	51	30	A2	Exp. up to 18 m
3	64	38	A3	Exp. over 18 m to 23 m
4	76	44	A4	Exp. over 23 m to 27 m
5	89	52	A5	Exp. over 27 m to 38 m
6	102	60	A6	Exp. over 38 m to 46 m

Maximum Skew Limits: Fixed End - No Limit
Exp. End - 45° A2 thru A6

LIST OF ITEMS USED:

ITEM 555.09M - STRUCT. CONCRETE, CLASS "HP" (CM)
ITEM 556.0202M - EPOXY COATED BAR REINF. FOR STRUCT. (CM)
ITEM 567.31M - MOD. ARMORED JOINT SYSTEM W/ COMP. SEAL TYPE A1 (m)
ITEM 567.32M - MOD. ARMORED JOINT SYSTEM W/ COMP. SEAL TYPE A2 (m)
ITEM 567.35M - MOD. ARMORED JOINT SYSTEM W/ COMP. SEAL TYPE A5 (m)
ITEM 567.36M - MOD. ARMORED JOINT SYSTEM W/ COMP. SEAL TYPE A6 (m)
ITEM 18567.46M - ELASTOMERIC CONC. FOR BRIDGE JT. SYSTEMS (M)
ITEM 586.01M - DRILL & GROUT REINF. BARS (mm)

AS BUILT REVISIONS

SIGNATURE DATE

INTERSTATE 481

COMPRESSION SEAL JOINT DETAILS

STATE OF NEW YORK
DEPARTMENT OF TRANSPORTATION

FILENAME	REGION	DATE	DRAWING NO.
305613AJJA1	3	10/02	JD-1

CHECKED BY ____ DRAFTED BY ____ ESTIMATED BY ____ CHECKED BY ____ DESIGNED BY ____ JOB MANAGER ____ DESIGN SUPERVISOR ____

FED ROAD REG. NO.	STATE	CONTRACT NO.	SHEET NO.	TOTAL SHEETS
1	N.Y.	D259214	414	432

BRIDGE REHABILITATION PROJECT (ELEMENT SPECIFIC)
VARIOUS BRIDGES ON INTERSTATE 481
TOWNS OF DEWITT AND CICERO
ONONDAGA COUNTY
P.I.N. 305613 B.I.N. 1093561 & 1093562

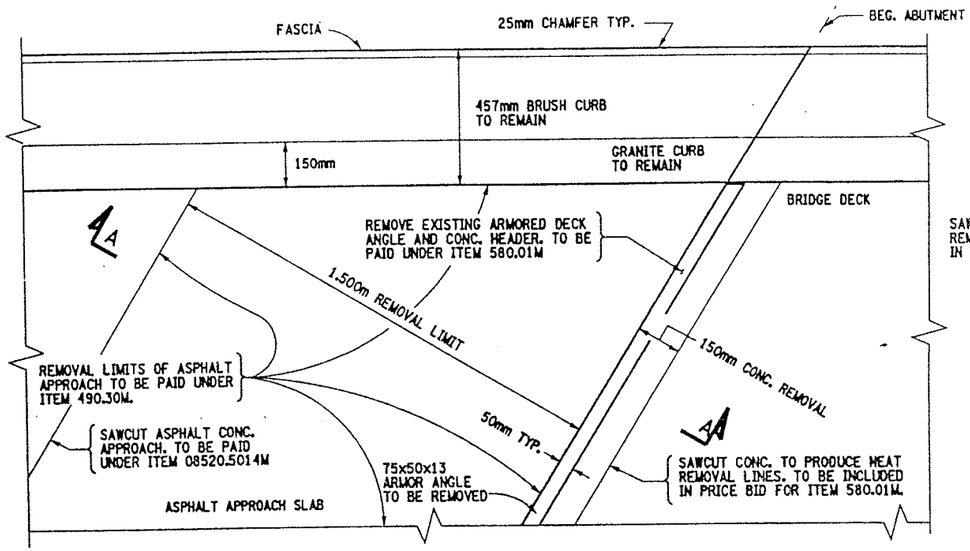

EXISTING BEG. ABUTMENT PLAN VIEW

BIN 1093561 - SOUTH ABUT.
BIN 1093562 - SOUTH ABUT.

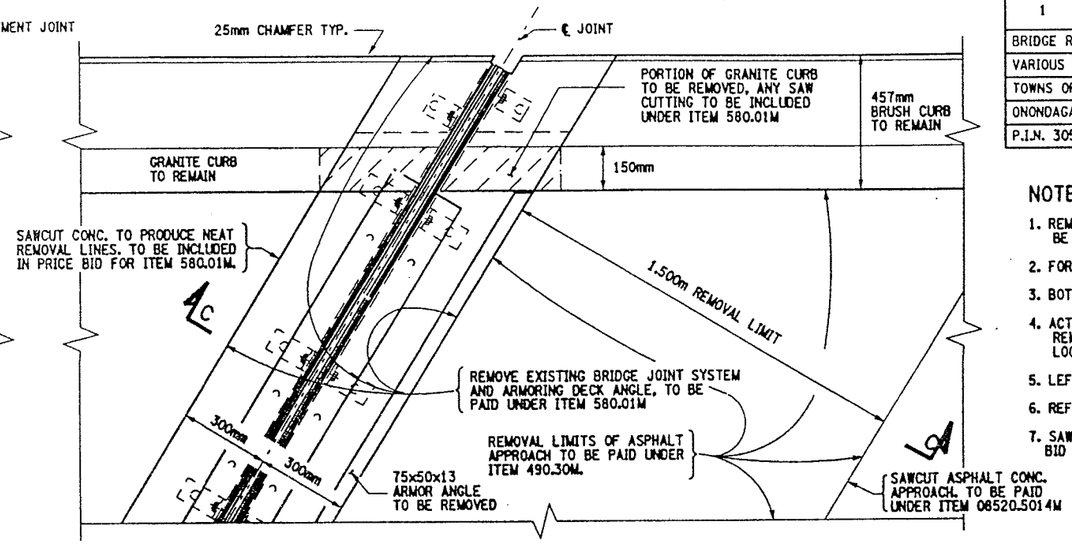

EXISTING END ABUTMENT PLAN VIEW

BIN 1093561 - NORTH ABUT.
BIN 1093562 - NORTH ABUT.

NOTES:

1. REMOVAL OF ARMORING DECK ANGLE & ANCHORAGE SHALL BE FROM CURB TO CURB.
2. FOR SECTION VIEWS SEE DWG. NO. JD-51 AND JD-52. .
3. BOTH STRUCTURES HAVE 10°-51'-46" SKEW.
4. ACTUAL BRIDGE JOINT BLOCK-OUT DIMENSIONS MAY VARY. REMOVAL LIMITS SHALL BE TO EXISTING BLOCK-OUT LOCATIONS OR AS DIRECTED BY ENGINEER.
5. LEFT SIDE OF DECK SHOWN, RIGHT SIDE IDENTICAL.
6. REFER TO DWG. NO. JT-3 FOR ADDITIONAL DETAILS.
7. SAW CUTTING OF CONCRETE SHALL BE INCLUDED IN PRICE BID FOR ITEM 580.01M.

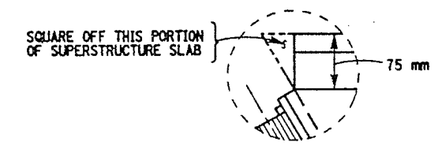

DETAIL "S"
NOT TO SCALE

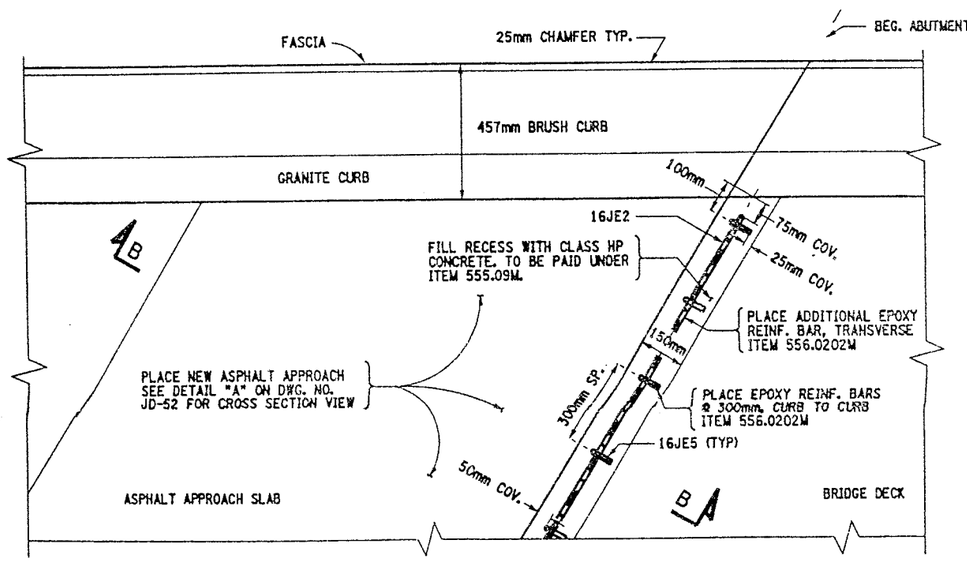

PROPOSED BEG. ABUTMENT PLAN VIEW

BIN 1093561 - SOUTH ABUT.
BIN 1093562 - SOUTH ABUT.

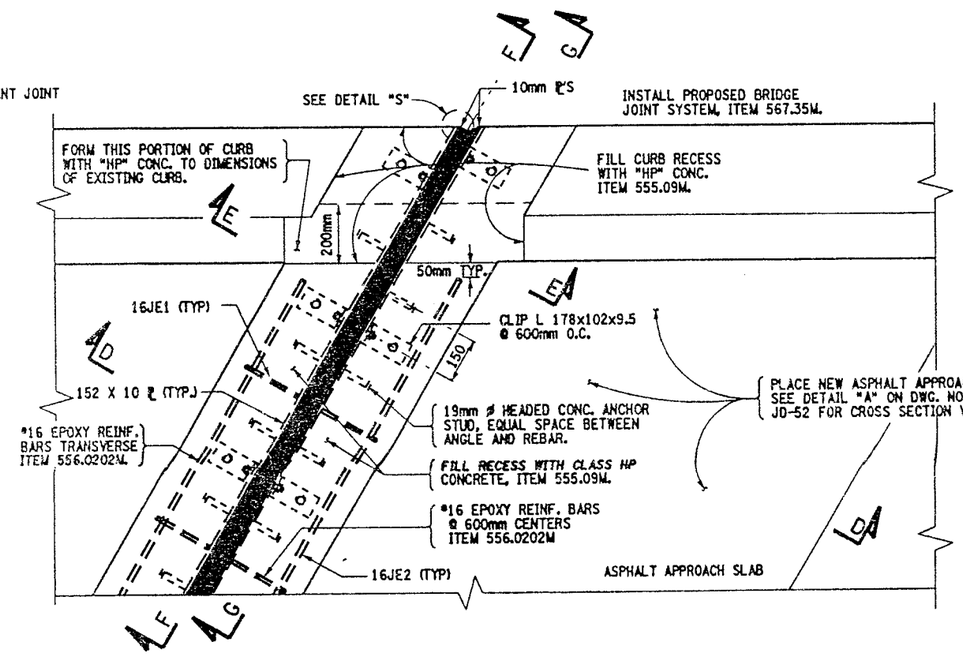

PROPOSED END ABUTMENT PLAN VIEW

BIN 1093561 - NORTH ABUT.
BIN 1093562 - NORTH ABUT.

WORK TO BE DONE:

BIN 1093561-
REMOVE ARMORING DECK ANGLE AT BEG. (SOUTH) ABUTMENT. REPLACE THE EXISTING BRIDGE JOINT AND REMOVE THE ARMORING DECK ANGLE AT END (NORTH) ABUTMENT.

BIN 1093562 -
REMOVE ARMORING DECK ANGLE AT BEG. (SOUTH) ABUTMENT. REPLACE THE EXISTING BRIDGE JOINT AND REMOVE THE ARMORING DECK ANGLE AT END (NORTH) ABUTMENT.

ITEMS USED:

ITEM 490.30M	- MISC. COLD MILLING OF BIT. CONC. (SM)
ITEM 08520.5014M	- SAWCUTTING BIT. CONC. (M)
ITEM 555.09M	- STRUCT. CONCRETE, CLASS "HP" (CM)
ITEM 556.0202M	- EPOXY-COATED BAR REINFORCEMENT FOR STRUCT. (Kg)
ITEM 567.35M	- MOD. ARMORED JOINT SYSTEM W/ COMP. SEAL TYPE A5 (m)
ITEM 580.01M	- REMOVAL OF STRUCT. CONCRETE (CM)

ALL DIMENSIONS ARE IN mm UNLESS OTHERWISE NOTED

AS BUILT REVISIONS

SIGNATURE DATE

INTERSTATE 481 NB & SB
OVER
ROUTE 290

BRIDGE JOINT DETAILS

STATE OF NEW YORK
DEPARTMENT OF TRANSPORTATION

FILENAME	REGION	DATE	DRAWING NO.
305613AJJA1	3	10/02	JD-50

DESIGN SUPERVISOR ____ JOB MANAGER ____ DESIGNED BY ____ ESTIMATED BY ____ DRAFTED BY ____ CHECKED BY ____ CHECKED BY ____

FED ROAD REG. NO.	STATE	CONTRACT NO.	SHEET NO.	TOTAL SHEETS
1	N.Y.	D259214	415	432

BRIDGE REHABILITATION PROJECT (ELEMENT SPECIFIC)
VARIOUS BRIDGES ON INTERSTATE 481
TOWNS OF DEWITT AND CICERO
ONONDAGA COUNTY
P.I.N. 305613 | B.I.N. 1093561 & 1093562

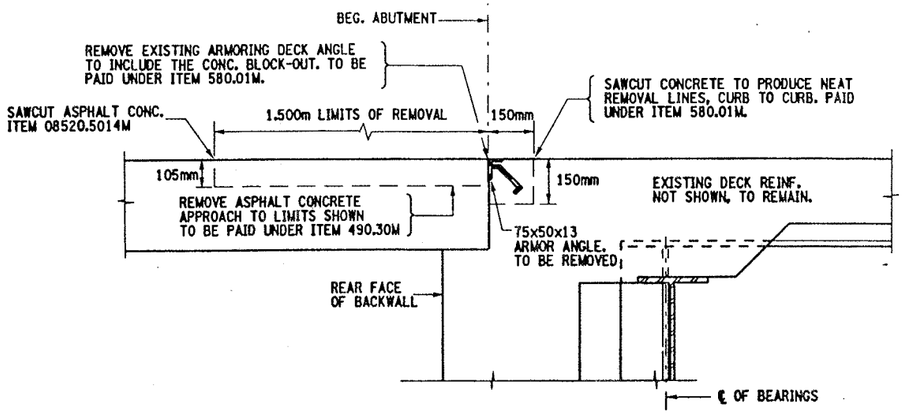

SECTION A-A
EXISTING BEG. ABUTMENT JOINT

BIN 1093561 - SOUTH ABUT.
BIN 1093562 - SOUTH ABUT.

NOT TO SCALE

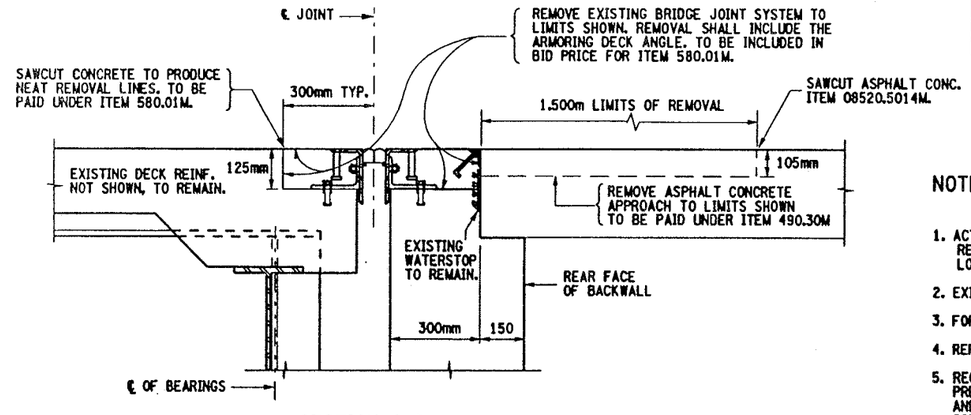

SECTION C-C
EXISTING END ABUTMENT JOINT

BIN 1093561 - NORTH ABUT.
BIN 1093562 - NORTH ABUT.

NOT TO SCALE

NOTES:

1. ACTUAL BRIDGE JOINT BLOCK-OUT DIMENSIONS MAY VARY. REMOVAL LIMITS SHALL BE TO EXISTING BLOCK-OUT LOCATIONS, AOBE.
2. EXISTING WATERSTOPS SHALL REMAIN.
3. FOR CALCULATION OF "A" DIMENSION REFER TO DWG. NO. JD-1.
4. REFER TO DWG. NO. JD-50 FOR PROPOSED PARTIAL PLAN VIEWS.
5. RECESSES RECEIVING ITEM 555.09M, AFTER SURFACE PREPARATION, THOROUGHLY WET THE CONCRETE SURFACES AND ALL POROUS SURFACES TO BE IN CONTACT WITH NEW CONCRETE FOR 12 HOURS. NOTE, THE USE OF MATERIAL SPECIF. 705-22 PORTLAND CEMENT MORTAR BONDING GROUT HAS BEEN ELIMINATED, (PROJECT PROPOSAL).
6. ALL NOTES AND DETAILS ON DWG. NO. JD-1 SHALL APPLY.

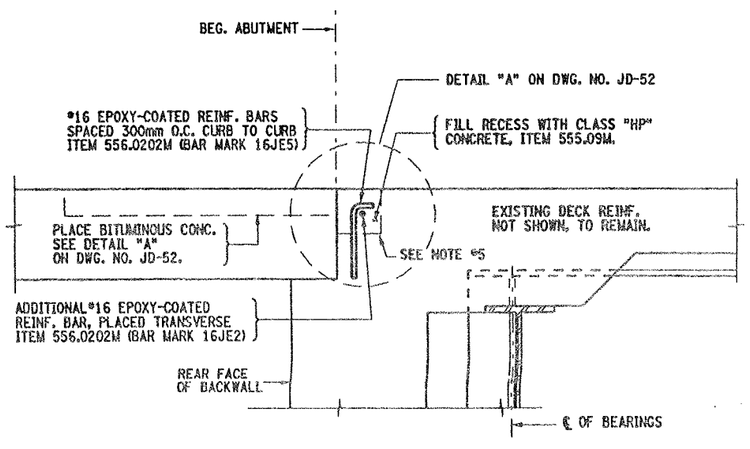

SECTION B-B
PROPOSED BEG. ABUTMENT JOINT

BIN 1093561 - SOUTH ABUT.
BIN 1093562 - SOUTH ABUT.

NOT TO SCALE

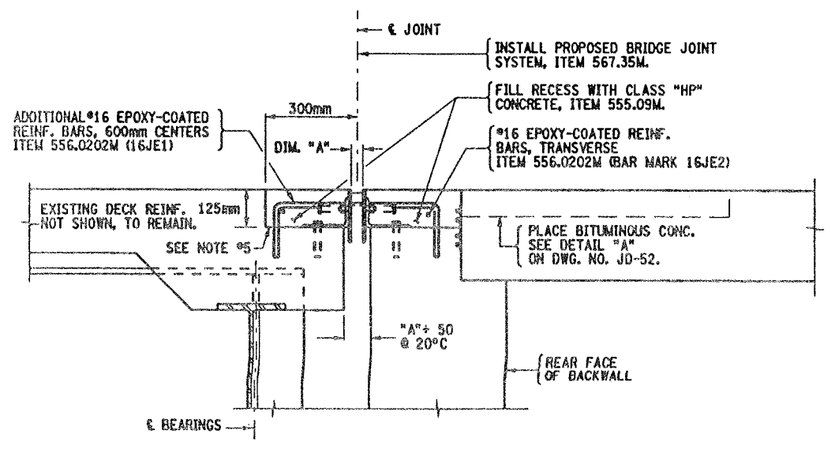

SECTION D-D
PROPOSED END ABUTMENT JOINT

BIN 1093561 - NORTH ABUT.
BIN 1093562 - NORTH ABUT.

NOT TO SCALE

ITEMS USED:

ITEM 490.30M	- MISC. COLD MILLING OF BIT. CONC. (SM)
ITEM 08520.5014M	- SAWCUTTING BIT. CONC. (M)
ITEM 555.09M	- STRUCT. CONCRETE, CLASS "HP" (CM)
ITEM 556.0202M	- EPOXY-COATED BAR REINF. FOR STRUCT.(Kg)
ITEM 567.35M	- MOD. ARMORED JOINT SYSTEM W/COMP. SEAL TYPE A5 (M)
ITEM 580.01M	- REMOVAL OF STRUCT. CONCRETE (CM)

ALL DIMENSIONS ARE IN mm UNLESS OTHERWISE NOTED

AS BUILT REVISIONS

SIGNATURE | DATE

INTERSTATE 481 NB & SB
OVER
ROUTE 290
BRIDGE JOINT DETAILS

STATE OF NEW YORK
DEPARTMENT OF TRANSPORTATION

FILENAME	REGION	DATE	DRAWING NO.
305613AJ.JA1	3	10/02	JD-51

DESIGN SUPERVISOR ____ JOB MANAGER ____ DESIGNED BY ____ CHECKED BY ____ ESTIMATED BY ____ DRAFTED BY ____ CHECKED BY ____

FED ROAD REG. NO.	STATE	CONTRACT NO.	SHEET NO.	TOTAL SHEETS
1	N.Y.	D259214	416	432

BRIDGE REHABILITATION PROJECT (ELEMENT SPECIFIC)

VARIOUS BRIDGES ON INTERSTATE 481

TOWNS OF DEWITT AND CICERO

ONONDAGA COUNTY

P.I.N. 305613 | B.I.N. 1093561 & 1093562

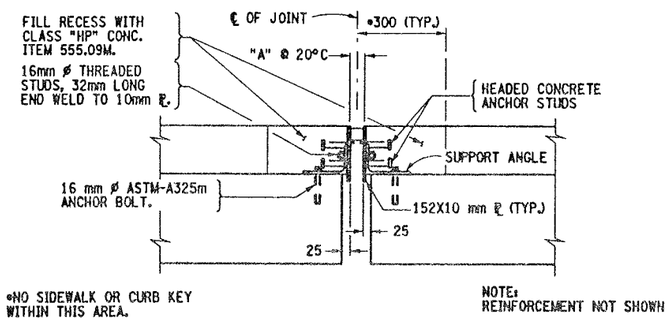

SECTION E-E
PROPOSED ABUTMENT JOINT

NOT TO SCALE

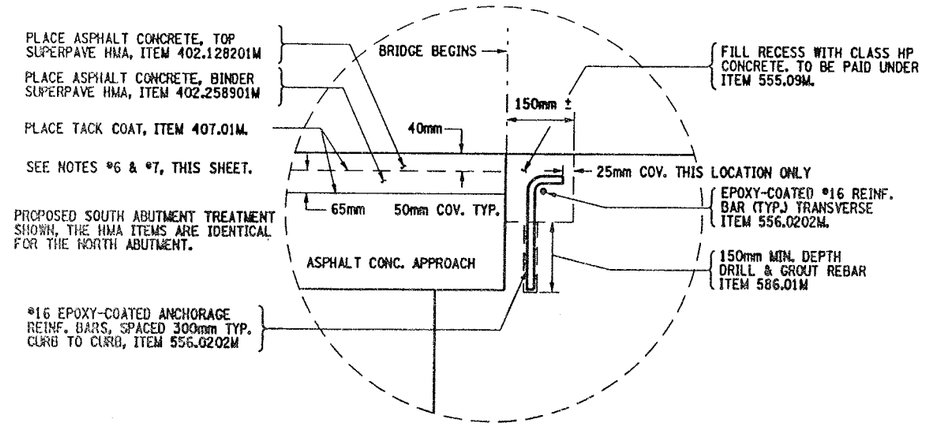

DETAIL "A"

NOT TO SCALE

NOTES:

1. ACTUAL BRIDGE JOINT BLOCK-OUT DIMENSIONS MAY VARY. REMOVAL LIMITS SHALL BE TO EXISTING BLOCK-OUT LOCATIONS, AOBE.
2. REFER TO DWG. NO. JD-50 FOR PARTIAL PLAN VIEWS.
3. ALL WELDS SHALL BE GROUND SMOOTH TO THE SATISFACTION OF THE ENGINEER, ON SEAL CONTACT SIDE OF EDGE BEAM.
4. THIS DEPTH SHALL BE INDICATED ON THE SHOP DRAWINGS AND SHALL BE SUCH THAT WHEN THE SEAL IS COMPRESSED TO 50% OF ITS NOMINAL WIDTH, THE TOP OF THE SEAL SHALL BE NOT LESS THAN 6 mm NOR MORE THAN 19 mm BELOW THE TOP OF ROADWAY.
5. RECESSES RECEIVING ITEM 555.09M, AFTER SURFACE PREPARATION, THOROUGHLY WET THE CONCRETE SURFACES AND ALL POROUS SURFACES TO BE IN CONTACT WITH NEW CONCRETE FOR 12 HOURS. NOTE, THE USE OF MATERIAL SPECIF. 705-22 PORTLAND CEMENT MORTAR BONDING GROUT HAS BEEN ELIMINATED, (PROJECT PROPOSAL).
6. ALL SURFACES OF HMA SHALL BE CLEANED AND TACK-COATED PRIOR TO HMA PLACEMENT. ALL COSTS SHALL BE INCLUDED WITHIN THE UNIT PRICE BID FOR ITEM 407.01M.
7. ANY USE OF SUPERPAVE HMA ITEMS SHALL INCLUDE THE APPROPRIATE PLANT PRODUCTION QUALITY ADJUSTMENT ITEMS.

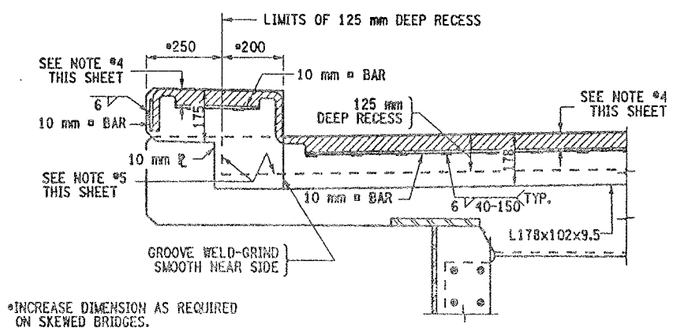

PROPOSED ABUTMENT JOINT
SECTION F-F (BRUSH CURB)

NOT TO SCALE

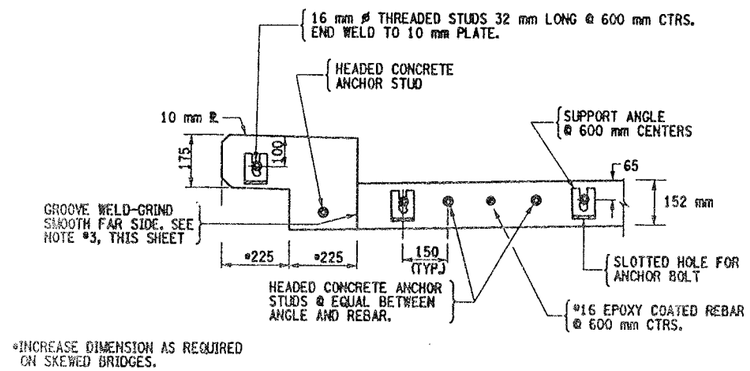

PROPOSED ABUTMENT JOINT
SECTION G-G (BRUSH CURB)

(ONLY THE STEEL SHOWN)

NOT TO SCALE

ITEMS USED:

ITEM 402.128201M	- SUPERPAVE HMA F2, 12.5mm (MT)
ITEM 402.128211M	- PLANT PRODUCTION QUALITY ADJUSTMENT TO 402.128201M (QU)
ITEM 402.258901M	- SUPERPAVE HMA F9, 25.0mm (MT)
ITEM 402.258911M	- PLANT PRODUCTION QUALITY ADJUSTMENT TO 402.258901M (QU)
ITEM 407.01M	- TACK COAT (L)
ITEM 556.0202M	- EPOXY-COATED BAR REINF. FOR STRUCT. (Kg)
ITEM 555.09M	- STRUCT. CONCRETE, CLASS "HP" (CM)
ITEM 586.01M	- DRILL & GROUT REINF. BARS (mm)

ALL DIMENSIONS ARE IN mm UNLESS OTHERWISE NOTED

AS BUILT REVISIONS

SIGNATURE | DATE

INTERSTATE 481 NB & SB
OVER
ROUTE 290

BRIDGE JOINT DETAILS

STATE OF NEW YORK
DEPARTMENT OF TRANSPORTATION

FILENAME	REGION	DATE	DRAWING NO.
305613AJ.JA1	3	10/02	JD-52

DESIGN SUPERVISOR ____ JOB MANAGER ____ DESIGNED BY ____ ESTIMATED BY ____ DRAFTED BY ____ CHECKED BY ____ CHECKED BY ____

ATHENICA
ENVIRONMENTAL SERVICES INC.
Tel (718) 784-7490
Fax (718) 784-4085

BULK (NOB) ASBESTOS ANALYSIS BY POLARIZED LIGHT MICROSCOPY AND TRANSMISSION ELECTRON MICROSCOPY

3

CLIENT: NYS DOT, Region 3
LABORATORY ID #: 04-04-109
DATES OF ANALYSIS: 04/29/04

PROJECT: Bin # 1093561
ANALYT. METHODOLOGIES: ELAP 198.1, ELAP 198.4
DATE OF REPORT: 04/30/04

LABORATORY RESULTS

CLIENT #	LAB. ID #	LOCATION	%ORG	%ASI	%AII	PLM RESULTS	TYPE OF ASBEST.	TEM RESULTS	TYPE OF ASBEST.	POSIT. / NEGAT.
01	04-04-109-01	Steel paint coat G-5 bottom flange @4meters from end bearing	41.93	9.49	48.58	**ND**	NA	**ND**	NA	**Negat.**
02	04-04-109-02	Steel paint coat G-3 web @ 0.5 meters from end bearing	49.89	6.14	43.97	**ND**	NA	**ND**	NA	**Negat.**
03	04-04-109-03	Steel paint coat G-2 bearing end abutment	41.92	12.96	45.12	**ND**	NA	**ND**	NA	**Negat.**

ANALYST
E. Sioukri

LABORATORY DIRECTOR
Spiro Dongaris

LABORATORY CERTIFICATION NUMBERS: NVLAP 101958, ELAP 10955

- Athenica Environmental Services Inc. (AES), is responsible only for information pertaining to samples taken by its employees.
- Samples will be stored for sixty (60) days. AES Inc., should be notified within this time frame for a true duplicate analysis.
- The report relates only to items tested. This report must not be used to claim product endorsement by NVLAP or any other agency of the U.S. Government. Test reports may not be reproduced except in full and with prior approval of AES Inc.
- The liability of Athenica Environmental Services Inc. with respect to the services charged, shall in no event exceed the amount of the invoice.

ATHENICA
ENVIRONMENTAL SERVICES INC.
45-09 GREENPOINT AVENUE
LONG ISLAND CITY, NY 11104
Tel. (718) 784-7490
Fax. (718) 784-4085

PROJECT NO. (ATHENICA FILE#) C003314

DATE 4/16/2004

METHOD OF SHIPMENT U.S. MAIL

INSPECTOR K. WAY

NUMBER OF SAMPLES 3

TYPE OF ANALYSIS REQUESTED [ ] PLM [X] NOB-PLM [X] NOB-TEM [ ] OTHERS

TURNAROUND TIME [ ] 6 HRS [ ] 12 HRS [ ] 24 HRS [X] OTHER HRS

COMMENTS ATT: CHRISTOPHER ANDERSON
333 E. WASHINGTON ST. SYRACUSE, N.Y. 13202

HOM. AREA	SAMLPLE #	SAMPLE DESCRIPTION	SAMPLE LOCATION	FIELD COMMENTS	LABORATORY RESULTS		
					PLM	PLM-NOB	TEM-NO
	01	STEEL PAINT COAT	G-5 BOTTOM FLANGE	@ 4 METERS FROM END BEAR			
	02	"	G-3 WEB	@ .5 METER FROM END BEARING			
	03	"	G-2 BEARING	END ABUTMENT			

TRANSMITTAL OF RESULTS :
[X] STANDARD
[ ] TELEPHONE RESULTS TO
[ ] FAX RESULTS TO

TELEPHONE # : (315) 428-4628
FAX # :

BATCH # : 04-04-109

CHAIN OF CUSTODY RECORD

RELINQUISHED BY :	Kent Way	DATE :	4/16/2004	TIME :	13:00
RECEIVED BY :	[illegible]	DATE :	4/22/2004	TIME :	
ANALYST :		DATE :	4/29/2004	TIME :	

LABORATORY ACCREDITATION :
NVLAP# 101958 ELAP# 10955

Asbestos Sampling Survey

Location:

BIN 1-09356-1
Interstate Route 481 South Bound over Route 290

Prepared for:

New York State
Department of Transportation

PIN 3804.09.101

LaBella Project No. 97132

May, 1999

Table of Contents

Page

I. Project Summary 1

II. Site Description 1

III. Inspection Procedures 1

IV. Results 2

Certification 2

Figures and Table

I. Project Summary

In accordance with conditions of Term Agreement D010010, LaBella Associates, P.C. conducted an asbestos sampling survey of the Interstate Route 481 South Bound bridge over Route 290. Based on laboratory analyses of bulk samples collected, the following material was determined to contain asbestos:

BIN 1-09356-1 Interstate Route 481 South Bound over Route 290

Type of Material	Estimated Amount
Sheet Packing	8.1 Square Meters

II. Site Description

The Site is located in Onondaga County, New York. For the purpose of this report, the Site consists of the Interstate Route 481 South Bound bridge over Route 290 (See attached FIGURE 1 - Site Location Map).

III. Inspection Procedures

The following procedures were used to obtain the data for this Report:

A. A review of record drawings supplied by Region 3 personnel and a visual inspection of the subject structure were conducted to identify potential visible/accessible sources of asbestos-containing materials. Observations and notes were made to provide a description of the structure, and an estimate of the approximate amount, length, or area of ACM present.

B. Physical or operational constraints which might affect the removal of the ACM were identified and reported.

C. Bulk samples of suspected ACM were collected during the site inspection of the subject structure. Samples were taken from each homogeneous area that may contain ACM.

D. Samples were submitted for analysis. Preliminary PLM analyses of NOB materials were performed by LaBella Laboratories, a NYSDOH approved laboratory, to determine the presence and percentage of asbestos in each sample. TEM analyses of NOB materials, if necessary, were performed by New York Testing Laboratories, Inc.

E. Lab results were used to determine the approximate location, type, and amount of the verified ACM.

F. A drawing of the structure at the Site was created, in order to show sample locations and the approximate locations and amounts of confirmed ACM observed in accessible locations.

Only accessible areas were inspected. Inaccessible areas, such as areas within the bridge or the approaches to the bridge were not included in this inspection. No investigation was conducted by LaBella Associates to determine the presence of underground utilities on or in the immediate vicinity of the Site. Actual sample locations are shown in the attached FIGURE 2. Results of bulk sample analyses are tabulated in the attached TABLE.

IV. Results

BIN 1-09356-1 Interstate Route 481 South Bound over Route 290

Sheet Packing

Asbestos-containing sheet packing is located between the tops of the abutments and the deck slab at both ends of the bridge. Most of this material is presently covered by the bridge deck, although the edges of this sheet packing are exposed and visible at various locations.

It is estimated that the total amount of this asbestos-containing sheet packing material on the bridge is approximately 8.1 square meters. This estimate is based on field measurements taken at the time of the site visit.

The approximate locations of this asbestos-containing sheet packing are shown in FIGURE 2.

Certification

LaBella Associates, P.C. certifies the accuracy of this report, to the best of our knowledge, based on the information collected as described in the Inspection Procedures Section of this investigation.

Figures & Table

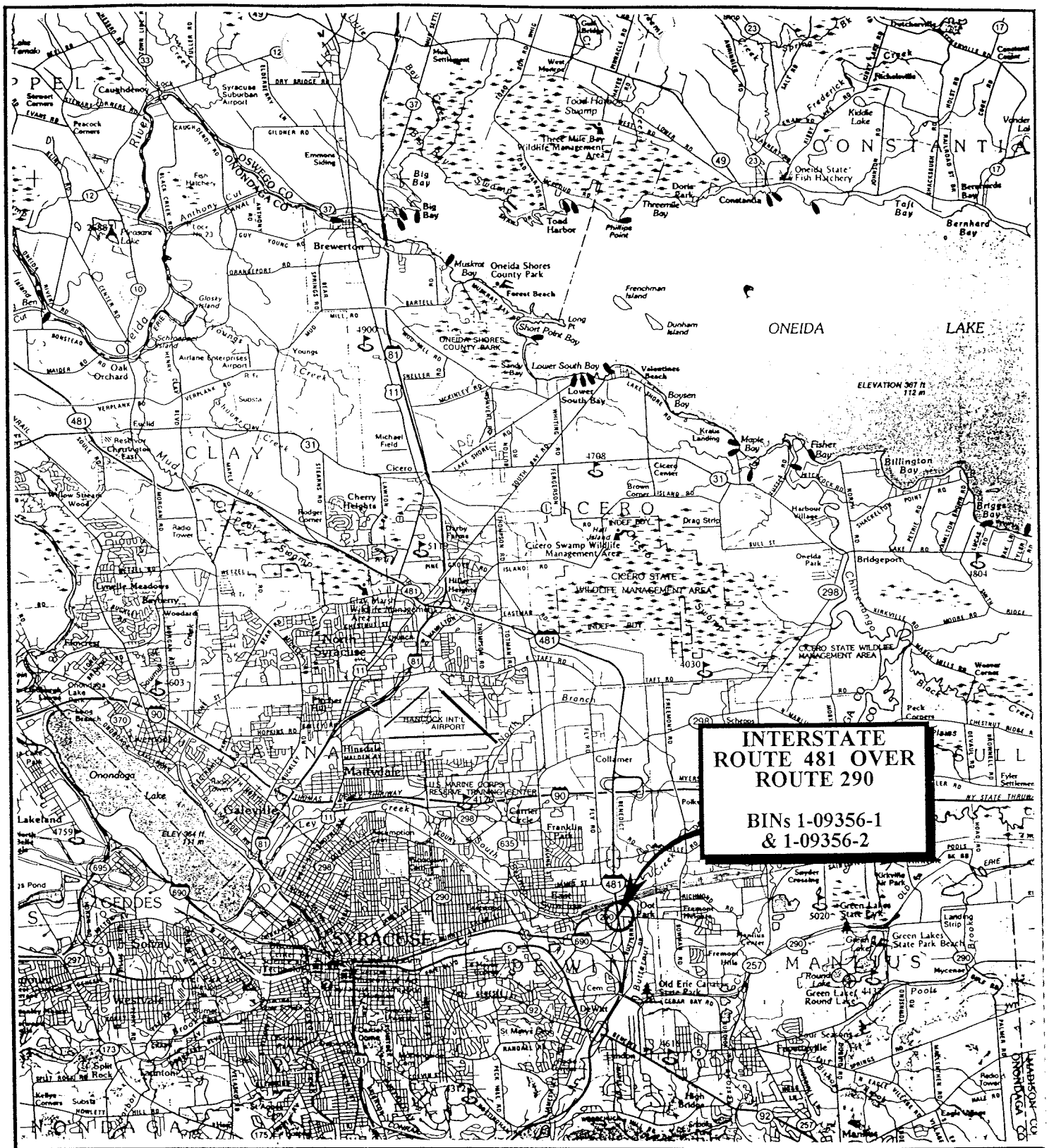

N

SCALE: 1" = 2000'

FIGURE 1
Site Location Map

Interstate Route 481
over Route 290
East Syracuse, New York

LABELLA

PROJECT NO. 97132

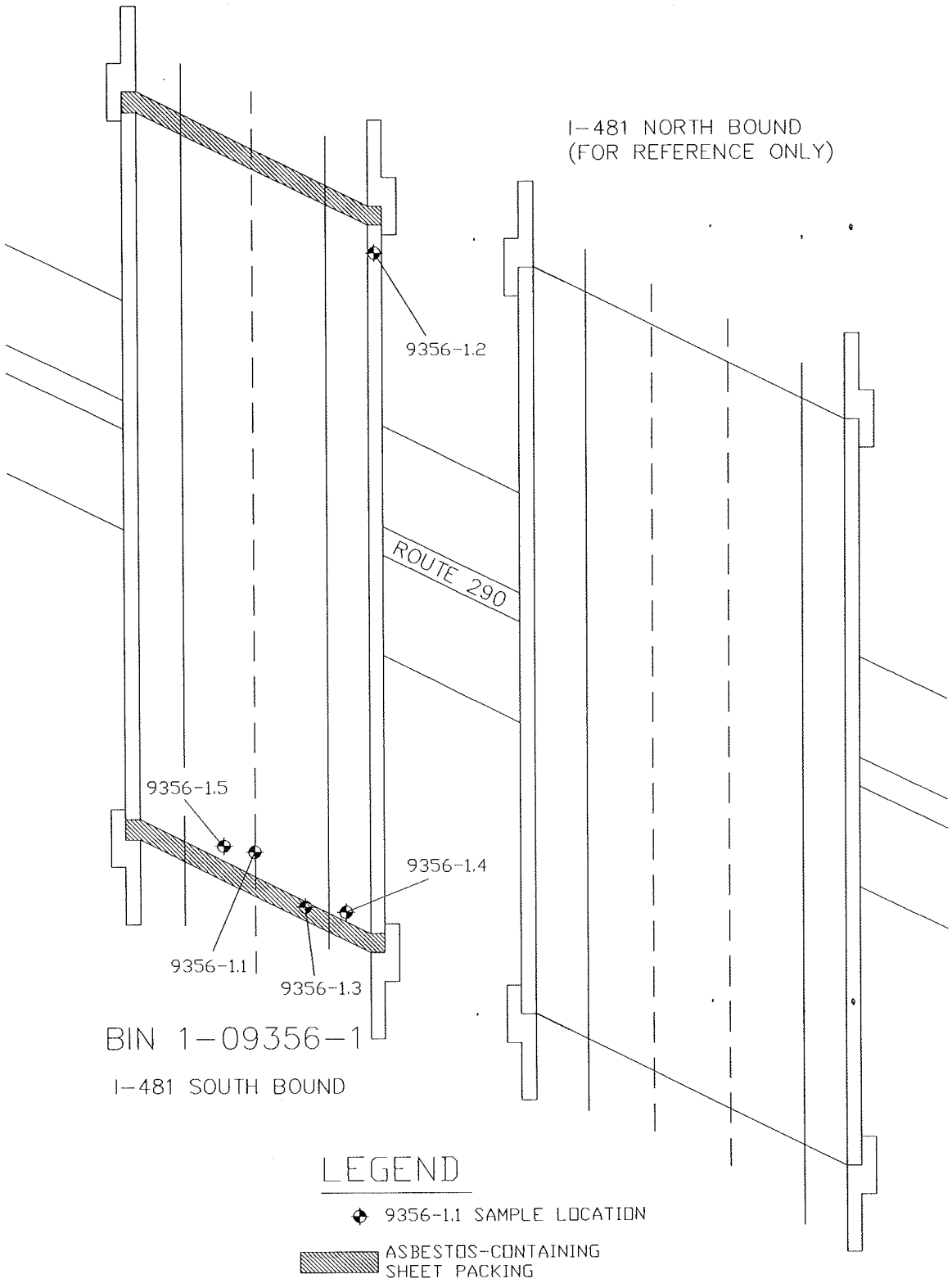

NORTH	PROJECT TITLE: ASBESTOS SAMPLING SURVEY 7 BRIDGES, ONONDAGA & OSWEGO COUNTIES, NEW YORK	PROJECT NO. 97132 PIN 3804.09.101
	FIGURE 2 : I-481 SOUTH BOUND OVER ROUTE 290 BIN 1-09356-1 SAMPLE LOCATIONS AND CONFIRMED ACM	NOT TO SCALE DATE: MAY, 1999

Bulk Sample Results Table

Asbestos Sampling Survey
BIN 1-09356-1
Interstate Route 481 South Bound over Route 290
Onondaga County, New York
LaBella Project # 97132
PIN 3804.09.101

Sample #	Sample Location	Type of Material	Results % Asbestos	Amount of Material	Specification Item No.
9356-1.1	South End of Bridge, on Inside I-Beam	Green Paint	None Detected	N/A	N/A
9356-1.2	North End of Bridge, on East I-Beam	Green Paint	None Detected	N/A	N/A
9356-1.3	**East End of Bridge Between Deck & Abutment**	**Sheet Packing**	**35% Chrysotile**	**8.1 Square Meters**	**15202.0627 (M)**
9356-1.4	East End of Bridge on Back Wall	Gray Masonry Coating	None Detected	N/A	N/A
9356-1.5	South End of Bridge, Beneath Bearing	Bearing Pad	None Detected	N/A	N/A

Watts
Architects
&Engineers

BIN 1093571

I-81 (Former I-481) SB over Conrail Railroad

BIN 1093571
Location: I-481 SB over CSX Railroad Yard

NYSDOT D031085 PIN 3501.60 - I-81 Viaduct Replacement or New Urban Arterial
City of Syracuse, Onondaga County
Bridge Asbestos Assessment Results

Asbestos containing materials have been identified on this bridge.

ITEM	DESCRIPTION	QUANTITY
210.481201	Removal and Disposal of Miscellaneous ACM (BV14) – Sheet Packing	76 SQ FT
210.3413	Removal and Disposal of Caulking ACM (BV14) – (Found around the guiderail base plates. Material was to have been removed during a 2002 rehabilitation project. Remaining quantity is unknown.)	LUMP SUM
210.481202	Removal and Disposal of Miscellaneous ACM (BV14) – Bituminous Joint Filler (Assumed to be ACM based on record plan review.)	47 SQ FT

The following summarizes the results of the most recent asbestos survey and record plan review.

Watts Inspection Findings (February 2014)

A bridge inspection was completed on 2/10/2014 and the following suspect ACMs were identified and sampled:

- Bearing pad
- Sheet packing
- Green bridge girder paint
- Off-white/Grey masonry paint
- Grey caulk between 1093571/1093572 abutment walls
- Vinyl drain pipe
- Beige paint on deck sidewalls

Laboratory analysis indicated that the sheet packing sampled by Watts was confirmed positive for asbestos. The other listed materials were not positive for asbestos, per laboratory analytical results. Watts inspected the guiderail base plates but could not find any guiderail base plate caulk during our inspection. The Design Builder should be aware and revisit the associated location(s) during their work.

Review of Historic Plans and Previous Asbestos Survey Information

- The record plans (FISH 70-7, D251438, D259214) were reviewed in support of the field survey. The following suspect ACMs were identified:
    - Compressed asbestos sheet packing
    - Bituminous joint filler
    - Caulking compound (Indicates that this material [123 linear feet] was to be removed based on the reviewed rehabilitation plans dated 2002. Some caulk may still remain under the railing base plates). The Design Builder should be aware and revisit the associated location(s) during their work.

- A previous asbestos survey competed by LaBella in 1998 was reviewed in support of this project. The following suspect materials were sampled for laboratory analysis.
    - Bridge paint
    - Compressed asbestos sheet packing
    - Caulking compound (Guide rail base plates)
    - Joint filler
    - Masonry coating
    - Bearing pad

  Laboratory analysis indicate that the sheet packing and guiderail caulk was confirmed positive for asbestos.

Watts Architecture & Engineering

BRIDGE ASBESTOS FIELD INSPECTION FORM

BIN Number/Location: 1093571 (481 SB over RR yard)

Inspection Date: 3-24-14, 3-19-14, 2-10-14, 2-11-14

Project Name: : I-81 Viaduct Replacement or New Urban Arterial

PIN Number: PIN: 3501.60, D031085

Inspector(s): S. Matthews

Watts Project No: 13092

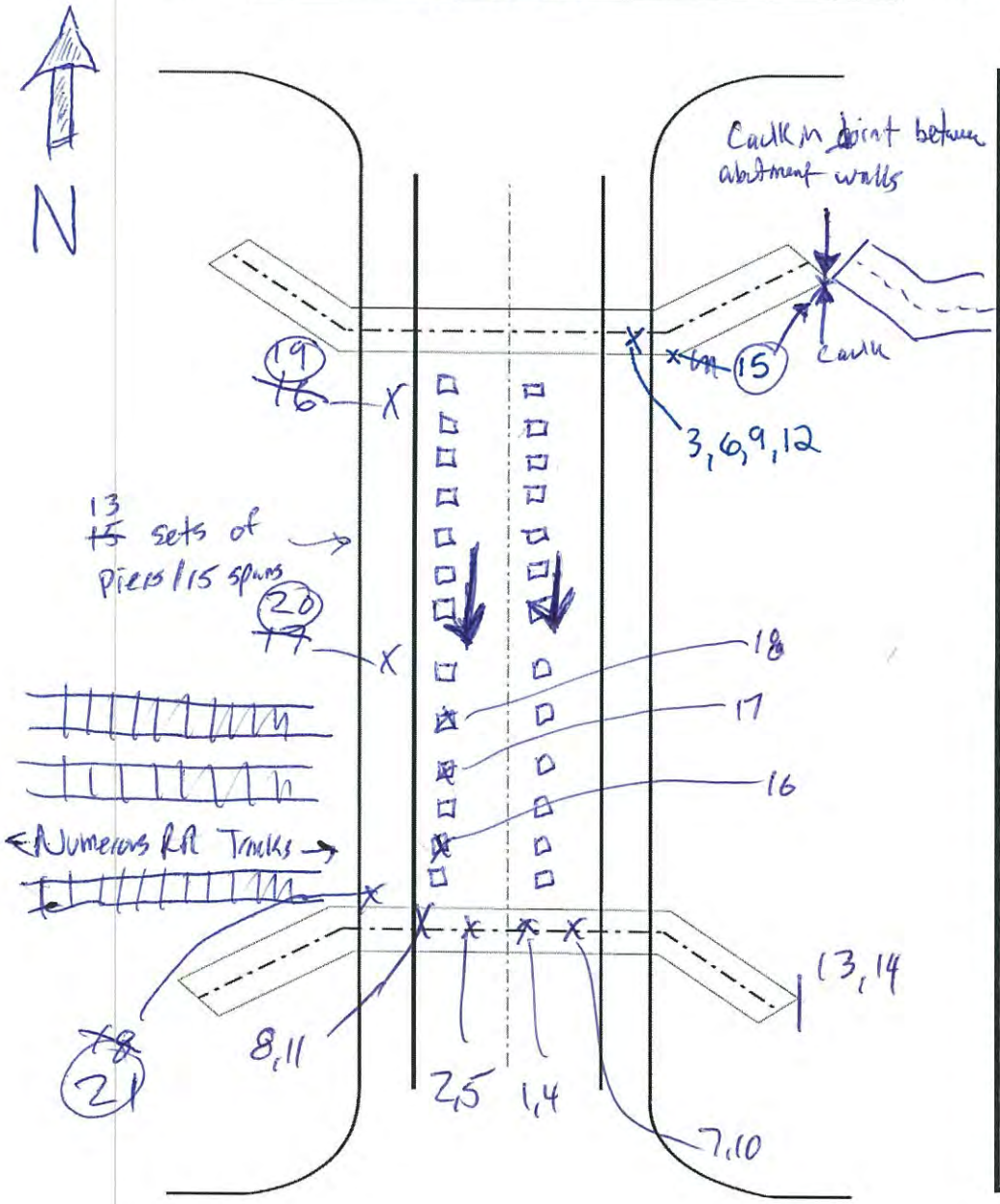

SAMPLE LOCATION PLAN VIEW - N.T.S.

Field Inspection Checklist Item	Investigated	Present	Sampled	
Girder Paint	☐	☐	☒	7,8,9
Truss Paint	☐	☐	☒	
Abutment Coating	☐	☐	☒	10/11/12
Abutment Caulk	☐	☐	☒	13,14,15
Abut. Exp. Jt. Filler	☒	☐	☐	~~3,4,5~~ 4,5,6
Headwall Sheet Packing	☐	☐	☒	~~13,14,15~~
Bearing Pad	☐	☐	☒	1,2,3
Transite Pipe	☒	☐	☐	
Pipe Coating/Wtr. Proof	☒	☐	☐	
Scupper Wtr. Proof	☒	☐	☐	
Dum Dum Paint	☒	☐	☐	
Deck Caulk	☒	☐	☐	
Deck Exp. Jt. Filler	☒	☐	☐	
Approach Sheet Packing	☒	☐	☐	
Railing Paint	☒	☐	☐	
Railing Caulk	☒	☐	☐	
Sidewalk Caulk	☒	☐	☐	
Lighting Pole Caulk	☒	☐	☐	
Masonry Castings	☒	☐	☐	
Miscellaneous Tar	☒	☐	☐	
Utilities	☒	☐	☐	
Other Vinyl Pipe	☒	☐	☒	16,17,18
Other	☐	☐	☐	
Other Beige Paint	☒	☐	☒	19-20-21
Other on deck sidewalks	☐	☐	☐	
Other	☐	☐	☐	

Notes: Bridge surveyed over numerous days. Several types of paint sampled above and below deck. Sheet packing/bearing pads observed and sampled. Access to below requires CSX flagger. Observations from above requires UBIV.

EMSL Analytical, Inc.
490 Rowley Road, Depew, NY 14043
Phone/Fax: (716) 651-0030 / (716) 651-0394
http://www.EMSL.com buffalolab@emsl.com

EMSL Order:	141401427
CustomerID:	WATT50A
CustomerPO:	
ProjectID:	

Attn: **Scott Matthews**
Watts Architecture & Engineering
2610 Salina Street
Syracuse, NY 13205

Phone:	(315) 443-8611
Fax:	(315) 443-8605
Received:	04/04/14 12:00 PM
Analysis Date:	4/11/2014
Collected:	2/10/2014

Project: **13092 / I-81 Viaduct Replacement or New Urban Arterial: BIN 1093571 (481 SB over CSX RR Yard)**

Test Report:Asbestos Analysis of Bulk Material

Test	Analyzed Date	Color	Non Asbestos Fibrous	Non Asbestos Non-Fibrous	Asbestos
Sample ID 1093571-1 *141401427-0001*		**Description** **Homogeneity**	bearing pad Heterogeneous		
PLM NYS 198.1 Friable					**Not Analyzed**
PLM NYS 198.6 VCM					**Not Analyzed**
PLM NYS 198.6 NOB	4/8/2014	Brown /Green			**Inconclusive: None Detected**
TEM NYS 198.4 NOB	4/11/2014	Brown /Green			**None Detected**
Sample ID 1093571-2 *141401427-0002*		**Description** **Homogeneity**	bearing pad Heterogeneous		
PLM NYS 198.1 Friable					**Not Analyzed**
PLM NYS 198.6 VCM					**Not Analyzed**
PLM NYS 198.6 NOB	4/8/2014	Brown /Green			**Inconclusive: None Detected**
TEM NYS 198.4 NOB	4/11/2014	Brown /Green			**None Detected**
Sample ID 1093571-3 *141401427-0003*		**Description** **Homogeneity**	bearing pad Heterogeneous		
PLM NYS 198.1 Friable					**Not Analyzed**
PLM NYS 198.6 VCM					**Not Analyzed**
PLM NYS 198.6 NOB	4/8/2014	Brown /Green			**Inconclusive: None Detected**
TEM NYS 198.4 NOB	4/11/2014	Brown /Green			**None Detected**
Sample ID 1093571-4 *141401427-0004*		**Description** **Homogeneity**	sheet packing Homogeneous		
PLM NYS 198.1 Friable					**Not Analyzed**
PLM NYS 198.6 VCM					**Not Analyzed**
PLM NYS 198.6 NOB	4/8/2014	Gray /Black			**7.7% Chrysotile** **7.7% Total**
TEM NYS 198.4 NOB	4/11/2014				**Not Analyzed**

Initial Report From 04/11/2014 09:25:17

EMSL Analytical, Inc.
490 Rowley Road, Depew, NY 14043
Phone/Fax: (716) 651-0030 / (716) 651-0394
http://www.EMSL.com buffalolab@emsl.com

EMSL Order:	141401427
CustomerID:	WATT50A
CustomerPO:	
ProjectID:	

Test Report:Asbestos Analysis of Bulk Material

Test		Color	Fibrous	Non Asbestos Non-Fibrous	Asbestos
Sample ID 1093571-5 *141401427-0005*		**Description** **Homogeneity**	sheet packing		
PLM NYS 198.1 Friable					**Not Analyzed**
PLM NYS 198.6 VCM					**Not Analyzed**
PLM NYS 198.6 NOB	4/8/2014				**Positive Stop (Not Analyzed)**
TEM NYS 198.4 NOB	4/11/2014				**Not Analyzed**
Sample ID 1093571-6 *141401427-0006*		**Description** **Homogeneity**	sheet packing		
PLM NYS 198.1 Friable					**Not Analyzed**
PLM NYS 198.6 VCM					**Not Analyzed**
PLM NYS 198.6 NOB	4/8/2014				**Positive Stop (Not Analyzed)**
TEM NYS 198.4 NOB	4/11/2014				**Not Analyzed**
Sample ID 1093571-7 *141401427-0007*		**Description** **Homogeneity**	green girder paint Homogeneous		
PLM NYS 198.1 Friable					**Not Analyzed**
PLM NYS 198.6 VCM					**Not Analyzed**
PLM NYS 198.6 NOB	4/8/2014	Green			**Inconclusive: None Detected**
TEM NYS 198.4 NOB	4/11/2014	Green			**None Detected**
Sample ID 1093571-8 *141401427-0008*		**Description** **Homogeneity**	green girder paint Homogeneous		
PLM NYS 198.1 Friable					**Not Analyzed**
PLM NYS 198.6 VCM					**Not Analyzed**
PLM NYS 198.6 NOB	4/8/2014	Green			**Inconclusive: None Detected**
TEM NYS 198.4 NOB	4/11/2014	Green			**None Detected**
Sample ID 1093571-9 *141401427-0009*		**Description** **Homogeneity**	green girder paint Homogeneous		
PLM NYS 198.1 Friable					**Not Analyzed**
PLM NYS 198.6 VCM					**Not Analyzed**
PLM NYS 198.6 NOB	4/8/2014	Green			**Inconclusive: None Detected**
TEM NYS 198.4 NOB	4/11/2014	Green			**None Detected**
Sample ID 1093571-10 *141401427-0010*		**Description** **Homogeneity**	off-white/gray masonry paint Homogeneous		
PLM NYS 198.1 Friable					**Not Analyzed**
PLM NYS 198.6 VCM					**Not Analyzed**
PLM NYS 198.6 NOB	4/8/2014	Beige			**Inconclusive: None Detected**
TEM NYS 198.4 NOB	4/11/2014	Beige			**None Detected**

Initial Report From 04/11/2014 09:25:17

EMSL Analytical, Inc.
490 Rowley Road, Depew, NY 14043
Phone/Fax: (716) 651-0030 / (716) 651-0394
http://www.EMSL.com buffalolab@emsl.com

EMSL Order:	141401427
CustomerID:	WATT50A
CustomerPO:	
ProjectID:	

Test Report:Asbestos Analysis of Bulk Material

Test		Color	Fibrous	Non Asbestos Non-Fibrous	Asbestos
Sample ID 1093571-11 *141401427-0011*		**Description**	off-white/gray masonry paint		
		Homogeneity	Homogeneous		
PLM NYS 198.1 Friable					**Not Analyzed**
PLM NYS 198.6 VCM					**Not Analyzed**
PLM NYS 198.6 NOB	4/8/2014	Beige			**Inconclusive: None Detected**
TEM NYS 198.4 NOB	4/11/2014	Beige			**None Detected**
Sample ID 1093571-12 *141401427-0012*		**Description**	off-white/gray masonry paint		
		Homogeneity	Heterogeneous		
PLM NYS 198.1 Friable					**Not Analyzed**
PLM NYS 198.6 VCM					**Not Analyzed**
PLM NYS 198.6 NOB	4/8/2014	Beige			**Inconclusive: None Detected**
TEM NYS 198.4 NOB	4/11/2014	Beige			**None Detected**
Sample ID 1093571-13 *141401427-0013*		**Description**	gray caulk between 1093571/72 abutment walls		
		Homogeneity	Homogeneous		
PLM NYS 198.1 Friable					**Not Analyzed**
PLM NYS 198.6 VCM					**Not Analyzed**
PLM NYS 198.6 NOB	4/8/2014	Gray			**Inconclusive: None Detected**
TEM NYS 198.4 NOB	4/11/2014	Gray			**None Detected**
Sample ID 1093571-14 *141401427-0014*		**Description**	gray caulk between 1093571/72 abutment walls		
		Homogeneity	Homogeneous		
PLM NYS 198.1 Friable					**Not Analyzed**
PLM NYS 198.6 VCM					**Not Analyzed**
PLM NYS 198.6 NOB	4/8/2014	Gray			**Inconclusive: None Detected**
TEM NYS 198.4 NOB	4/11/2014	Gray			**None Detected**
Sample ID 1093571-15 *141401427-0015*		**Description**	gray caulk between 1093571/72 abutment walls		
		Homogeneity	Homogeneous		
PLM NYS 198.1 Friable					**Not Analyzed**
PLM NYS 198.6 VCM					**Not Analyzed**
PLM NYS 198.6 NOB	4/8/2014	Gray			**Inconclusive: None Detected**
TEM NYS 198.4 NOB	4/11/2014	Gray			**None Detected**
Sample ID 1093571-16 *141401427-0016*		**Description**	vinyl drain pipe		
		Homogeneity			
PLM NYS 198.1 Friable					**Not Analyzed**
PLM NYS 198.6 VCM					**Not Analyzed**
PLM NYS 198.6 NOB	4/11/2014				**Insufficient Residue**
Final Residue <1% of original subsample, Non-ACM.					
TEM NYS 198.4 NOB	4/11/2014				**Insufficient Residue**

Initial Report From 04/11/2014 09:25:17

EMSL Analytical, Inc.
490 Rowley Road, Depew, NY 14043
Phone/Fax: (716) 651-0030 / (716) 651-0394
http://www.EMSL.com buffalolab@emsl.com

EMSL Order:	141401427
CustomerID:	WATT50A
CustomerPO:	
ProjectID:	

Test Report:Asbestos Analysis of Bulk Material

Test		Color	Fibrous	Non Asbestos Non-Fibrous	Asbestos
Sample ID 1093571-17 *141401427-0017*		**Description** vinyl drain pipe **Homogeneity** Homogeneous			
PLM NYS 198.1 Friable					**Not Analyzed**
PLM NYS 198.6 VCM					**Not Analyzed**
PLM NYS 198.6 NOB	4/8/2014	Brown			**Inconclusive: None Detected**
TEM NYS 198.4 NOB	4/11/2014	Brown			**None Detected**
Sample ID 1093571-18 *141401427-0018*		**Description** vinyl drain pipe **Homogeneity** Homogeneous			
PLM NYS 198.1 Friable					**Not Analyzed**
PLM NYS 198.6 VCM					**Not Analyzed**
PLM NYS 198.6 NOB	4/8/2014	Brown			**Inconclusive: None Detected**
TEM NYS 198.4 NOB	4/11/2014	Brown			**None Detected**
Sample ID 1093571-19 *141401427-0019*		**Description** beige paint on deck sidewalls **Homogeneity** Homogeneous			
PLM NYS 198.1 Friable					**Not Analyzed**
PLM NYS 198.6 VCM					**Not Analyzed**
PLM NYS 198.6 NOB	4/8/2014	Beige			**Inconclusive: None Detected**
TEM NYS 198.4 NOB	4/11/2014	Beige			**None Detected**
Sample ID 1093571-20 *141401427-0020*		**Description** beige paint on deck sidewalls **Homogeneity** Homogeneous			
PLM NYS 198.1 Friable					**Not Analyzed**
PLM NYS 198.6 VCM					**Not Analyzed**
PLM NYS 198.6 NOB	4/8/2014	Beige			**Inconclusive: None Detected**
TEM NYS 198.4 NOB	4/11/2014	Beige			**None Detected**
Sample ID 1093571-21 *141401427-0021*		**Description** beige paint on deck sidewalls **Homogeneity** Homogeneous			
PLM NYS 198.1 Friable					**Not Analyzed**
PLM NYS 198.6 VCM					**Not Analyzed**
PLM NYS 198.6 NOB	4/8/2014	Beige			**Inconclusive: None Detected**
TEM NYS 198.4 NOB	4/11/2014	Beige			**None Detected**

Initial Report From 04/11/2014 09:25:17

EMSL Analytical, Inc.
490 Rowley Road, Depew, NY 14043
Phone/Fax: (716) 651-0030 / (716) 651-0394
http://www.EMSL.com buffalolab@emsl.com

EMSL Order:	141401427
CustomerID:	WATT50A
CustomerPO:	
ProjectID:	

Test Report:Asbestos Analysis of Bulk Material

		Non Asbestos		
Test	**Color**	**Fibrous**	**Non-Fibrous**	**Asbestos**

Analyst(s)

Rachel Giese

Rhonda McGee

Taron Williams

Rhonda McGee, Laboratory Manager
or other approved signatory

NOB = Non Friable Organically Bound N/A = Not Applicable VCM = Vermiculite Containing Material

-In New York State, TEM is currently the only method that can be used to determine if NOB materials can be considered or treated as non-asbestos containing.
All samples examined for the presence of vermiculite when analyzed via NYS 198.1.
-NYS Guidelines for Vermiculite containing samples are available at http://www.wadsworth.org/labcert/elapcert/forms/VermiculiteInterimGuidance_Rev070913.pdf
EMSL maintains liability limited to cost of analysis. This report relates only to the samples reported above and may not be reproduced, except in full, without written approval by EMSL. EMSL bears no responsibility for sample collection activities or analytical method limitations. Interpretation and use of test results are the responsibility of the client. Samples were received in good condition unless otherwise noted.
This report must not be used by the client to claim product certification, approval, or endorsement by NVLAP, NIST, or any agency of the federal government. This report may contain data that is not covered by the NVLAP accreditation.

Samples analyzed by EMSL Analytical, Inc. Depew, NY NYS ELAP 11606

Initial Report From 04/11/2014 09:25:17

OrderID: 141400415

WATTS ARCHITECTURE & ENGINEERING
ASBESTOS BULK SAMPLE CHAIN-OF-CUSTODY

141401427

Page: 1 of 2
Date: 2/10/14

Client: Parsons Engineering
Project: I-81 Viaduct Replacement or New Urban Arterial
Building / Location: BIN 1093571 (481 SB over CSX RR Yard)
Contact: Scott Matthews at (315) 443-8611
Email Preliminary Results to: smatthews@watts-ae.com
Mail Invoice to: Accounts Payable, Watts Architecture & Engineering, 95 Perry Street, Buffalo, NY 14203

Watts Project No.: 13092
Turnaround Requested: ____ 3 Hr. ____ 48 Hr.
Analysis Requested: ____ 6 Hr. ____ 72 Hr.
PLM X TEM X ____ 12 Hr. X ~~5 Day~~
____ 24 Hr. ____ 6-10 Day
4/4/14
1 week

Mail Report to: Scott Matthews, Watts Architecture & Engineering, 2610 S Salina Street, Syracuse, NY 13210
aspen Scott

Sample Number	Material Description	Sample Location	Laboratory Results PLM	Laboratory Results TEM
1093571- 1	Bearing Pad	South end / east		
2	Bearing Pad	South end / west		
3	Bearing Pad	North end / east		
4	Sheet Packing	South end / east		
5	Sheet Packing	South end / west		
6	Sheet Packing	North end / east		
7	Green Girder Paint	South end / east		
8	Green Girder Paint	South end / west		
9	Green Girder Paint	North end / east		
10	Off-white/grey masonry paint	South end / east		
11	Off-white/grey masonry paint	South end / west		
12	Off-white/grey masonry paint	North end / east		

Page 1 Of 1

Sampled By: Scott Matthews Date: 3/24/2014 Received By: ____ Date: Ex 12pm
Relinquished By: Scott Matthews to Fedex Date: 4/3/2014 Received By: ____ Date: ____
Comments: Positive Stop Anywhere in Series

RECEIVED APR 04 2014 BY:

C:\Documents and Settings\wkoch\Desktop\Blanks\Blank Asbestos COC
4/3/2014

OrderID: 141400853

141401427

WATTS ARCHITECTURE & ENGINEERING
ASBESTOS BULK SAMPLE CHAIN-OF-CUSTODY

Date: 2/10/14

Client: Parsons Engineering

Watts Project No.: 13092

Project: I-81 Viaduct Replacement or New Urban Arterial

Turnaround Requested: ____ 3 Hr. ____ 48 Hr.

Building / Location: BIN 1093571 (481 SB over CSX RR Yard)

Analysis Requested: ____ 6 Hr. ____ 72 Hr.

Contact: Scott Matthews at (315) 443-8611

PLM X TEM X ____ 12 Hr. X 5 Day

Email Preliminary Results to: smatthews@watts-ae.com

____ 24 Hr. ____ 6-10 Day

Mail Invoice to: Accounts Payable
Watts Architecture & Engineering
95 Perry Street, Buffalo, NY 14203

Mail Report to: Scott Matthews
Watts Architecture & Engineering
2610 S Salina Street, Syracuse, NY 13210

Asper scott 1 week

Sample Number	Material Description	Sample Location	Laboratory Results PLM	Laboratory Results TEM
1093571- 13	Grey caulk between 1093571/72 abutment walls	South end - center of two bridges		
14	Grey caulk between 1093571/72 abutment walls	South end - center of two bridges		
15	Grey caulk between 1093571/72 abutment walls	North end - east of bridge deck		
16	Vinyl drain pipe	2nd pier from south		
17	Vinyl drain pipe	4th pier from south		
18	Vinyl drain pipe	5th pier from south		
19	Beige paint on deck sidewalls	North end outside lane		
20	Beige paint on deck sidewalls	Middle outside lane		
21	Beige paint on deck sidewalls	South end outside lane		

Page 2 Of 2

Sampled By: Scott Matthews Date: 3/24/2014 Received By: ____ Date: FX 12pm

Relinquished By: Scott Matthews to Fedex Date: 4/3/2014 Received By: ____ Date: ____

Comments: Positive Stop Anywhere in Series

RECEIVED APR 04 2014 BY: ____

C:\Documents and Settings\wkoch\Desktop\Blanks\Blank Asbestos COC
4/3/2014

Watts
Architects
&Engineers

BIN 1093571 Inspection Photos

I-81 (Former I-481) SB over Conrail Railroad

Photo 1

Photo 2

Photo 3

Photo 4

Photo 5

F.I.S.H. 70-7

FED. RD. REG. NO.	STATE	FEDERAL AID PROJECT NO.	SHEET NO.	TOTAL SHEETS
1	NEW YORK	I-890-3(28) I-481-2(18)	179	302

INTERSTATE ROUTE CONNECTION 570
BUTTERNUT INTERCHANGE (PHASE 2)
ONONDAGA COUNTY

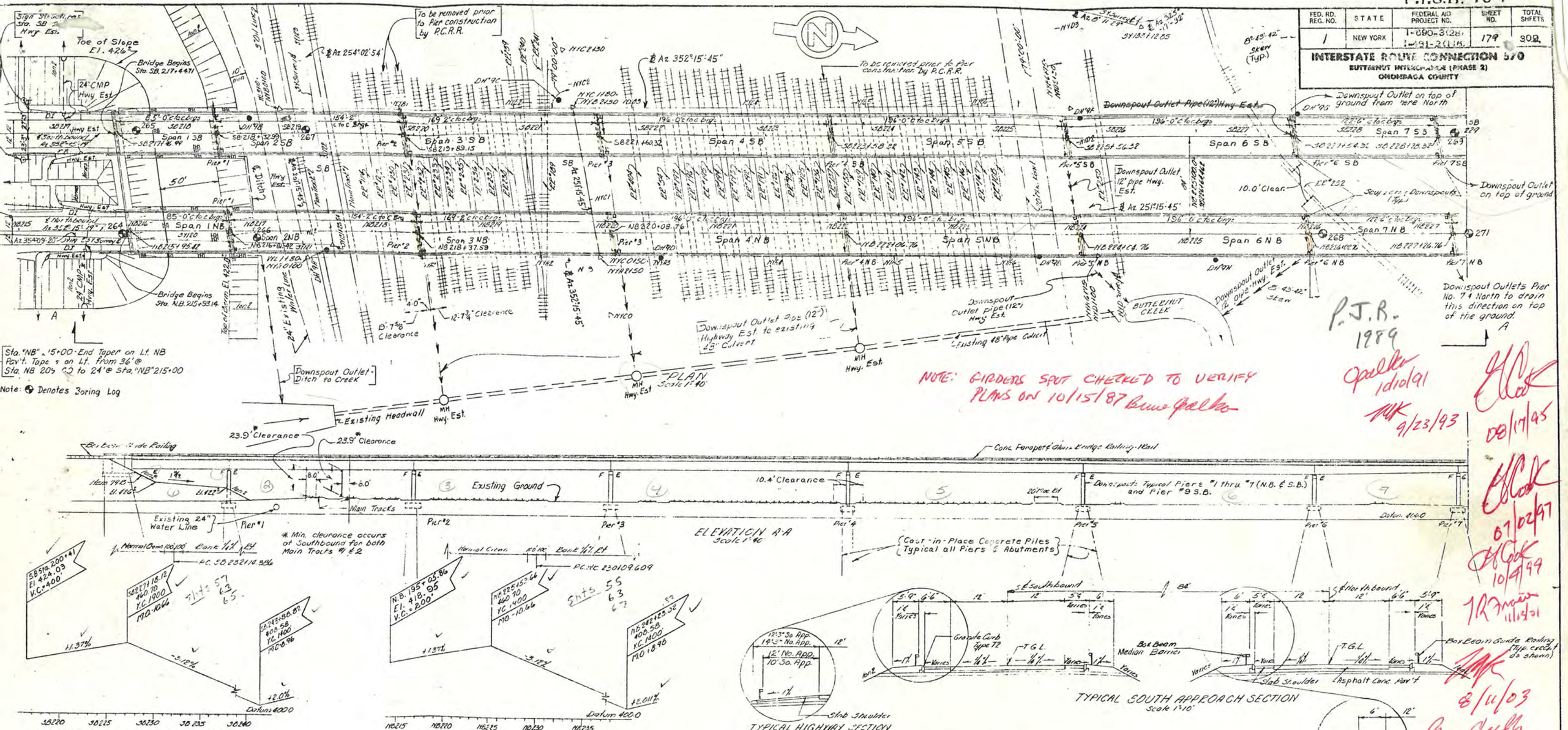

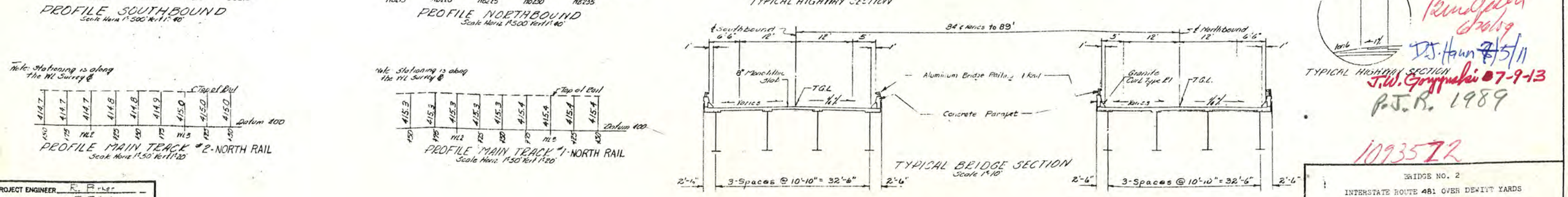

PROJECT ENGINEER	R. Baker
IN CHARGE OF	F. Eckel
DESIGNED BY	
DESIGN CHECKED BY	
DETAILED BY	H.F. Rafto
DETAIL CHECKED BY	A.E. Bernhardt

BRIDGE NO. 2
INTERSTATE ROUTE 481 OVER DEWITT YARDS

LAYOUT

DRAWING NO. 1 OF 50

FED. RD. REG. NO.	STATE	FEDERAL AID PROJECT NO.	SHEET NO.	TOTAL SHEETS
1	NEW YORK	I-81-3(38) I-81-2(16)	181	309

INTERSTATE ROUTE CONNECTION 370
SUTTER'S INTERCHANGE (PHASE 2)
ONONDAGA COUNTY

GENERAL NOTES

G1 - Design Specifications AASHO 1969 modified and current American Welding Society modified. The stresses assumed for design purposes conform to 1969 AASHO Specifications with the 28 day concrete stress (f'c) = 3000 psi minimum.

L.L. HS20-44 or two 24,000 lb. axles spaced 4'-0" on centers.

G2 - Material and Construction Specifications: Specifications of N.Y.S. Department of Public Works dated January 2, 1962 with current additions and modifications.

G3 - The Contractor's attention is directed to the Special Notes for this structure which appear in the proposal. Particular attention should be given to the foundation note which briefly outlines the anticipated subsurface conditions at the site of the structure and which specifies certain requirements relative to construction.

G4 - The cost of furnishing and placing water used for ~~molding and~~ selected granular fill will be paid for under Item 1W and 1WA of the highway portion of the contract.

G5 - Reinforcing bars shall be lapped a minimum of 24 diameters.

G6 - The cost of all joint material will be included in the price bid for the various items of the contract.

G7 - All concrete anchor studs which are attached to the various steel details shall meet the requirements listed in paragraph 5, Construction Details, of Item 29B-Stud Shear Connectors. Payment for furnishing and placing the concrete anchors will be included in the unit price bid for the item to which the anchors are attached.

G8 - Due to the incompatability of the caulking compound with the premoulded bituminous joint filler, a layer of an approved type of pressure-sensitive release tape shall be placed between these materials.

The contractor may elect to change the layout of diaphragms from that shown on the contract plans. Placement of the diaphragms parallel with the skew (in line, not staggered) will be permitted. The stiffener locations may be altered to accommodate the revised diaphragm layout, but the spacing of stiffeners shown on the plans shall not be exceeded. Diaphragm spacing shall not exceed 25 feet.

CONCRETE ITEMS AND CEMENT

Description	Item No.		Type of Cement
All footings	20		2
Abutment pedestals, backwalls and wingwalls	20		2
Abutment headers and parapets	18		2
Pier columns, beams, pedestals, and crash walls	18		2
Monolithic slab	18MA		2
Parapet (Superstructure & Substructure)	18		2
Cast-in-Place Concrete Piles	85C		2

All concrete shall have entrained air in accordance with the specifications.

PROJECT ENGINEER R. Paciel
IN CHARGE OF F. Eckert
DESIGNED BY
DESIGN CHECKED BY
DETAILED BY
DETAIL CHECKED BY

SUPERSTRUCTURE NOTES

Sup 1 - After all superstructure steel has been erected, elevations shall be taken on the top of the steel at the centerline of web, at each centerline of bearing, center of the span and at other locations where theoretical bottom of the slab elevations are indicated on the plans.

The depth of haunch required to position the slab forms is obtained as follows. From the measured top of steel elevations subtract the deflections due to slab and superimposed dead load. Subtract this result from the listed bottom of slab elevation.

Sup 2 - All bearings are to be field welded to beams or girders.

Sup 3 - The Structural Slab on this structure shall be formed with permanent corrugated metal forms for concrete decks.

Sup 4 - All connection plates used in pairs shall be welded to the web and be placed paint tight against both flanges. This may be accomplished by cutting the stiffeners to fit or by cutting the stiffeners 1/8 inch short and then placing the stiffener tightly against the tension flange and welding the opposite end to the compression flange. Fitted stiffeners shall not be driven in place with sufficient force to distort the flange, web or stiffeners.

Sup 5 - All intermediate stiffeners and/or connection plates used singly on one side only or staggered on both sides shall be placed paint tight against the flange which is in tension under dead load and welded to the web and flange which is in compression.

Sup 6 - All bearing stiffeners shall be fillet welded to the web and top flange and groove welded or milled to bear to the bottom flange.

Sup 7 - All intermediate transverse stiffeners and connection plates shall be vertical unless otherwise approved by the Deputy Chief Engineer (Design).

Sup 8 - All bearing stiffeners and the ends of all girders shall be vertical.

Sup 9 - All anchor bolts shall be galvanized in accordance with the requirements of Material Specification M19.

Sup 10 - Structural steel members which are imbedded or in contact with cast or pneumatically projected concrete shall not be painted.

Sup 11 - Machine finished sliding surfaces in contact shall receive in the shop one coat of a hot mixture of white lead and tallow as provided for in the specifications under Part II, Section 3A, Painting. This shop coat of white lead and tallow shall be removed immediately prior to the assembly of the member in the field. All other machine finished surfaces shall be given one shop coat of paint.

Sup 12 - Wherever Modified A441 Steel is used, the flux for submerged arc welding shall be dried in ovens at 500°F. to 550°F. for at least two hours and stored in ovens held at 250°F. or more. Flux not used within 4 hours after removal from a drying or storage oven shall be redried before use.

Minimum preheat and Interpass Temperatures shall be as follows:

Thickness of Thickest Part at Point of Welding in Inches	
To 3/4, inclusive	70°F.
Over 3/4 to 1 1/2, inclusive	100°F.
Over 1 1/2 to 2 1/2, inclusive	175°F.
Over 2 1/2	250°F.

INDEX OF DRAWINGS

DRAWING NO.	CONTENTS	DRAWING NO.	CONTENTS
1	Layout	39	Joint sealer, waterstops, and trough
2	Layout	40	Approach shoulder details
3	Notes and estimate of quant.	41	Approach shoulder details
4	Earthwork	42	Bearings
5	South Abutment	43	Bearings
6	South Abutment	44	Bar list #1
7	North Abutment	45	Bar list #2
8	North Abutment	46	Bar list #3
9	Pier 1	47	Bar list #4
10	Piers 2, 3 and 4	48	Bar list #5
11	Piers 5 and 6	49	Bar list #6
12	Piers 7, 8 and 9 NBL	50	Bar list #7
13	Pier 9 SBL		
14	Pier 10		
15	Piers 11 and 12		
16	Piers 13 and 14		
17	Span 1		
18	Span 1		
19	Spans 2, 3, 4, 5 and 6		
20	Span 3		
21	Spans 6, 7 and 8		
22	Spans 4, 5 and 6		
23	Spans 7, 8 and 9		
24	Spans 7, 8 and 9		
25	Span 10		
26	Span 10		
27	Spans 11 thru 15 SB		
28	Spans 11 thru 15 SB		
29	Spans 11 thru 15 NB		
30	Spans 11 thru 15 NB		
31	Finger joint		
32	Downspout details		
33	Miscellaneous Details		
34	Miscellaneous Details		
35	Concrete parapet		
36	Railing details		
37	Railing layout 1		
38	Railing layout 2		

ESTIMATE OF QUANTITIES

ITEM NO.	DESCRIPTION	UNIT	TOTAL NEAT	TOTAL PROPOSAL	FINAL
2EF-B	Selected Granular Fill	C.Y.	8,000	8,000	
2UF	Underdrain Filter	C.Y.	20	20	
5B	Structure Excavation	C.Y.	4,850	4,850	
11HG	Perforated Corrugated Metal Pipe	L.F.	410	410	
	Underdrain - 6" Dia				
13DE-6	Downspouts - 6" Dia.	L.F.	56	60	
13DE-8	Downspouts - 8" Dia.	L.F.	794	800	
18	Class A Concrete for Structures	C.Y.	2,512	2,520	
18MA	Class A Concrete for Structures	S.F.	158,700	158,700	
20	Class B Concrete for Structures	C.Y.	2,211	2220	
24A	Bagged Screened Aggregate	C.Y.	110	110	
28	Bar Reinforcement for Structures	Lb.	2,110,000	2,110,000	
28B	Stud Shear Connectors	Ea.	30,160	30,160	
29	Structural Steel	Lb.	7,508,000	7,508,000	
37M(1)	Aluminum Bridge Railing (One Rail)	L.F.	8,680	8,680	
61	Bituminous Material	Gal.	168	170	
79B	Concrete Block Paving	S.Y.	1,130	1130	
83S	Steel Sheet Piling	S.F.	7,700	7,700	
83TAS	Temporary Sheet Piling	S.F.	18,800	18,800	
85C	Cast-in-Place Concrete Piles	L.F.	75,200	75,200	
87	Furnishing Equipment for Driving Piles	L.S.	Nec.	Nec	
94SBW	Stone Curb - (Granite)	L.F.	9,050	9,050	
101C	Drainage Trough	L.F.	320	320	
124	Sodding	S.Y.	210	210	
363J	Epoxy Protective Coating for Concrete	S.F.	9,150	9,150	
1WPS	Watering Plants and Sod	M/Gal.	4	4	

Note -
Where Item 13DC or Item 13DD appear on these drawings, the specifications for Item 13DE-6 and 13DE-8 shall apply.
Six inch diameter downspouts shall be paid for under Item 13DE-6
Eight inch diameter downspouts shall be paid for under Item 13DE-8

ITEM 29	
Type of Steel	Weight
A.S.T.M. Designation A36	1,917,000
" " A441	4,673,000
" " A441 Modified	1,378,500
" " A242	39,500
Total	7,508,000

BRIDGE NO. 2
INTERSTATE ROUTE 481 OVER DEWITT YARDS
GENERAL NOTES
ESTIMATE OF QUANTITIES TABLE
DRAWING NO. 3 OF 50

FED. RD. REG. NO.	STATE	FEDERAL AID PROJECT NO.	SHEET NO.	TOTAL SHEETS
1	NEW YORK	I-681-2(116)	182	300

INTERSTATE ROUTE CONNECTION 570
BUTTERNUT INTERCHANGE (PHASE 2)
ONONDAGA COUNTY

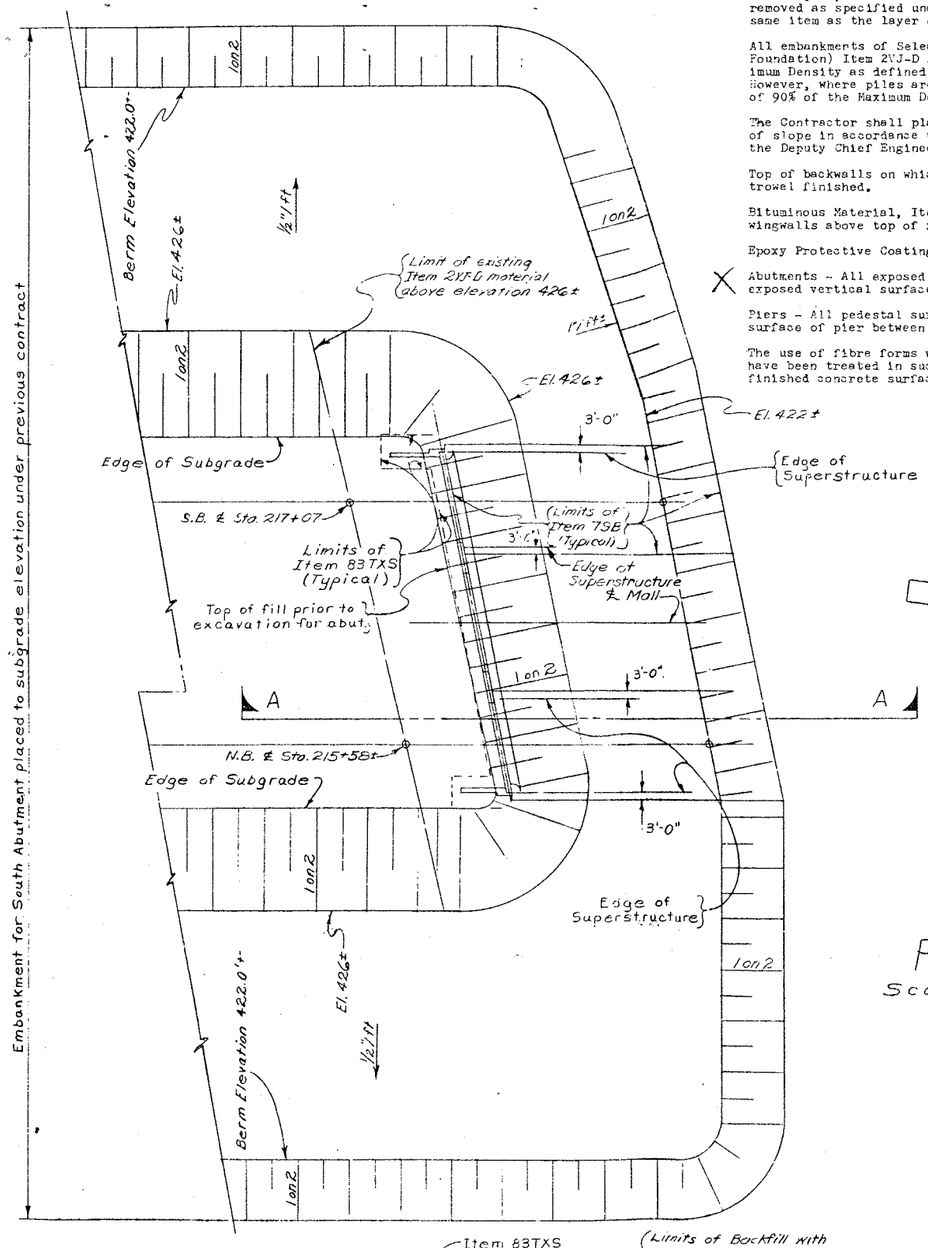

PLAN
Scale: 1" = 30'-0"

SUBSTRUCTURE NOTES

All sod, topsoil and unsuitable material under the substructure embankment shall be removed as specified under the General Excavation Specifications and replaced by the same item as the layer of embankment adjacent and above as shown on the plans.

All embankments of Selected Granular Fill, Item 2EF-B and Selected Fill (Bridge Foundation) Item 2VJ-D shall be compacted to a minimum dry density of 100% of Maximum Density as defined under "h. Embankments" of the General Excavation Specifications. However, where piles are to be placed through the embankment, a minimum dry density of 90% of the Maximum Density will be required.

The Contractor shall place and compact all fill for bridges between the final toes of slope in accordance with the plans and specifications in a manner satisfactory to the Deputy Chief Engineer (Design).

Top of backwalls on which asbestos sheet packing is to be placed shall be steel trowel finished.

Bituminous Material, Item 61, shall be applied to the backs of all abutments and wingwalls above top of footings, where fill is in contact with the walls.

Epoxy Protective Coating for Concrete shall be applied to the following surfaces:

Abutments - All exposed pedestal surfaces, including the area under the bearings, exposed vertical surfaces of backwall and curtain walls facing the superstructure.

Piers - All pedestal surfaces including the area under the bearings, and the top surface of pier between pedestals including the edge chamfer at top edge of pier.

The use of fibre forms will be permitted only if the interior surface of the forms have been treated in such a manner as to prevent helical corrugation marks on the finished concrete surface.

All exposed construction joints and exposed edges of concrete shall be chamfered one inch.

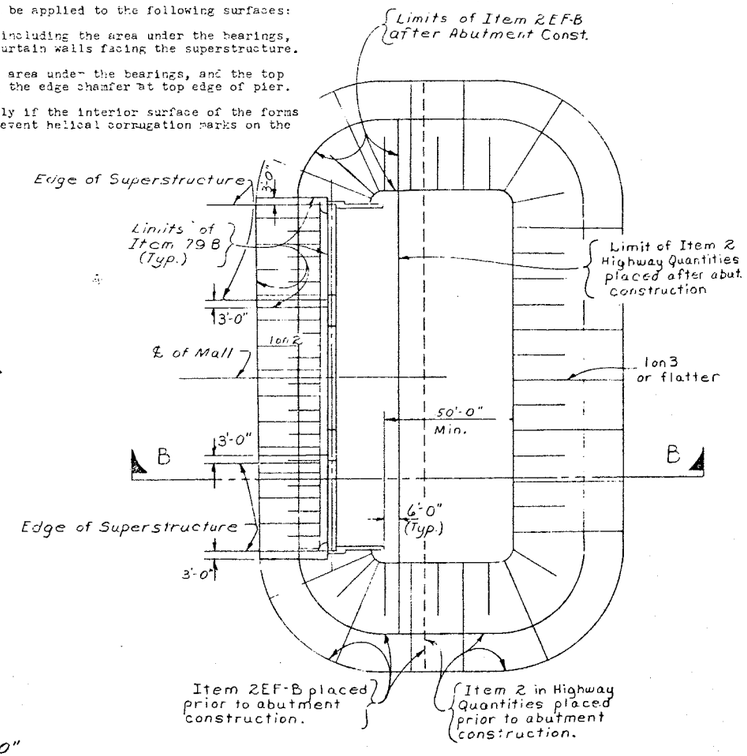

Note (A)
Remove any unsuitable material encountered below bottom of pier footing AOBE. Estimated depth of unsuitable material = 0 to 2 feet. Backfill to bottom of footing elevation with compacted Item 2 EF-B prior to driving piles.

The embankment for the South Abutment has been constructed to subgrade elevation under a previous contract.

The embankment for the North Abutment shall be constructed to the bottom of footing elevation and allowed to stand for a period of time satisfactory to the Deputy Chief Engineer (Structures) prior to driving piles and proceeding with abutment construction.

A six month waiting period is required after backfilling behind North Abutment prior to placing approach pavement at north end of bridge.

Items 2 and 2EF-B and Items 2 and 2VJ-D shall be placed simultaneously, in contact, on both sides of the vertical payment line. Sheeting or other means shall not be used to separate the two materials.

The installation of Selected Fill, Item 2EF-B at the North Abutment, or backfill at the South Abutment as shown on the structural plans, shall be completed immediately following the completion of abutments or walls.

All abutments and piers for this structure are to be supported on cast-in-place concrete piles.

For design purposes the pile load does not exceed 35 tons per pile.

Estimated length of cast-in-place concrete piles:

South Abutment = 75 Feet

Pier 1	S.B. = 55		Pier 9	S.B. = 70	
	N.B. = 60			N.B. = 70	
Pier 2	S.B. = 55		Pier 10	S.B. = 70	
	N.B. = 60			N.B. = 65	
Pier 3	S.B. = 60		Pier 11	S.B. = 65	
	N.B. = 65			N.B. = 65	
Pier 4	S.B. = 70		Pier 12	S.B. = 65	
	N.B. = 70			N.B. = 65	
Pier 5	S.B. = 75		Pier 13	S.B. = 55	
	N.B. = 80			N.B. = 65	
Pier 6	S.B. = 80		Pier 14	S.B. = 80	
	N.B. = 50			N.B. = 50*	
Pier 7	S.B. = 80				
	N.B. = 80		North Abutment = 65		
Pier 8	S.B. = 70				
	N.B. = 70				

* Pier #14 N.B. has an existing 48" diameter water main in close proximity. The water main is to be relocated under this contract. See Drawing 2.

It is anticipated that difficult driving of piles through the South Abutment embankment may be encountered and it may be necessary to utilize mechanical equipment for removing consolidated material from the location of the piles. This may be accomplished by various types of earth augers, well drilling equipment or other devices to remove the consolidated material to permit the piles to be driven to the desired depth or required resistance without distortion.

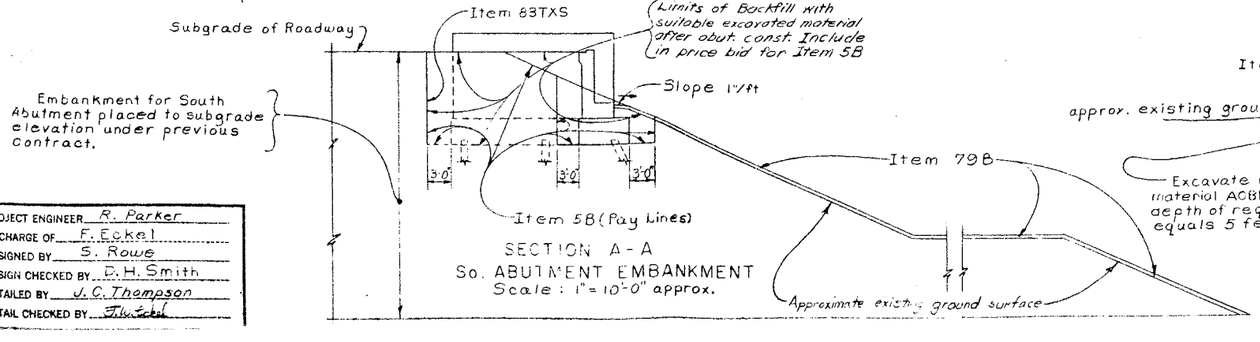

SECTION A-A
So. ABUTMENT EMBANKMENT
Scale: 1" = 10'-0" approx.

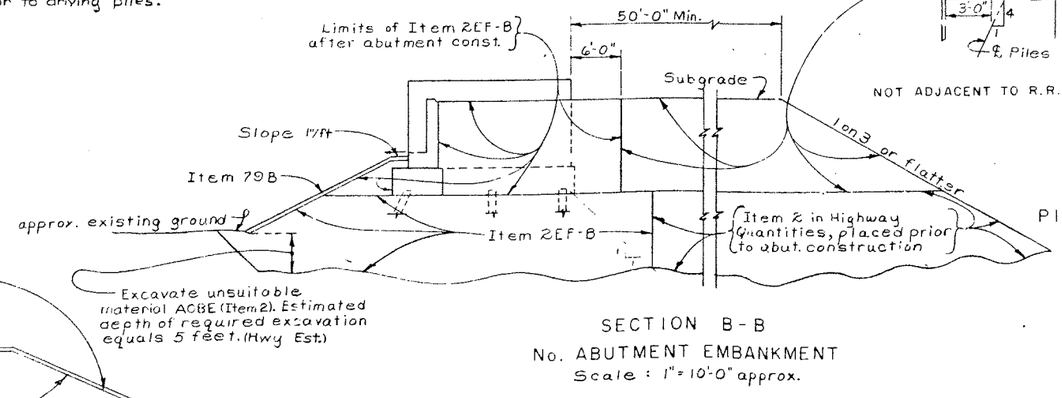

SECTION B-B
No. ABUTMENT EMBANKMENT
Scale: 1" = 10'-0" approx.

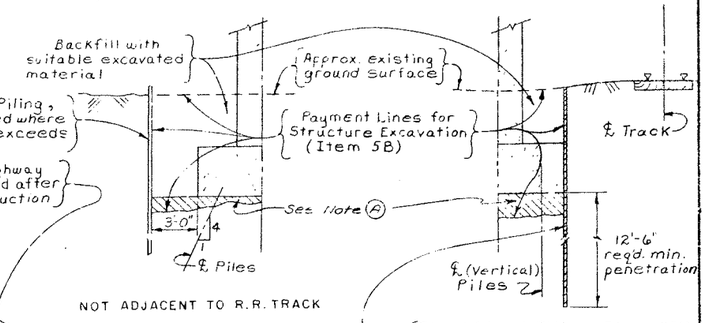

PIER EXCAVATION
Scale: 3/16" = 1'-0"

PROJECT ENGINEER	R. Parker
IN CHARGE OF	F. Eckel
DESIGNED BY	S. Rowe
DESIGN CHECKED BY	D.H. Smith
DETAILED BY	J.C. Thompson
DETAIL CHECKED BY	[illegible]

BRIDGE NO. 2
INTERSTATE ROUTE 481 OVER DEWITT YARDS

EARTHWORK

DRAWING NO. 4 OF 50

FED. RD. REG. NO.	STATE	FEDERAL AID PROJECT NO.	SHEET NO.	TOTAL SHEETS
1	NEW YORK	I-690-3(23) I-690-3(116)	183	206

INTERSTATE ROUTE CONNECTION 570
BUTTERNUT INTERCHANGE (PHASE 2)
ONONDAGA COUNTY

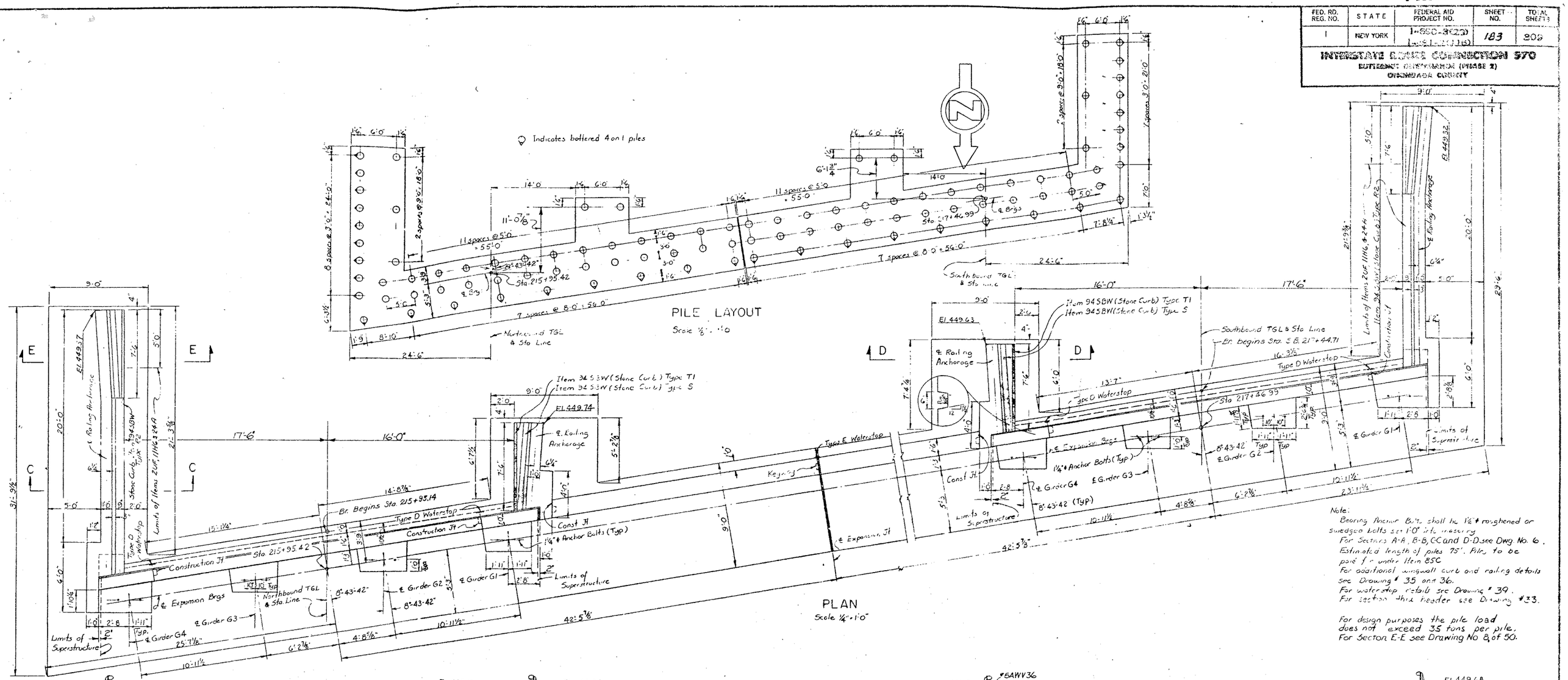

PROJECT ENGINEER R. Parker
IN CHARGE OF F. Eckert
DESIGNED BY D. Smith
DESIGN CHECKED BY S. Rowe
DETAILED BY D.H. Smith
DETAIL CHECKED BY H.G. Jones

FED. RD. REG. NO.	STATE	FEDERAL AID PROJECT NO.	SHEET NO.	TOTAL SHEETS
1	NEW YORK	I-890-3(28) I-481-2(116)	184	309

INTERSTATE ROUTE CONNECTION 570
BUTTERMILK INTERCHANGE (PHASE X)
ONONDAGA COUNTY

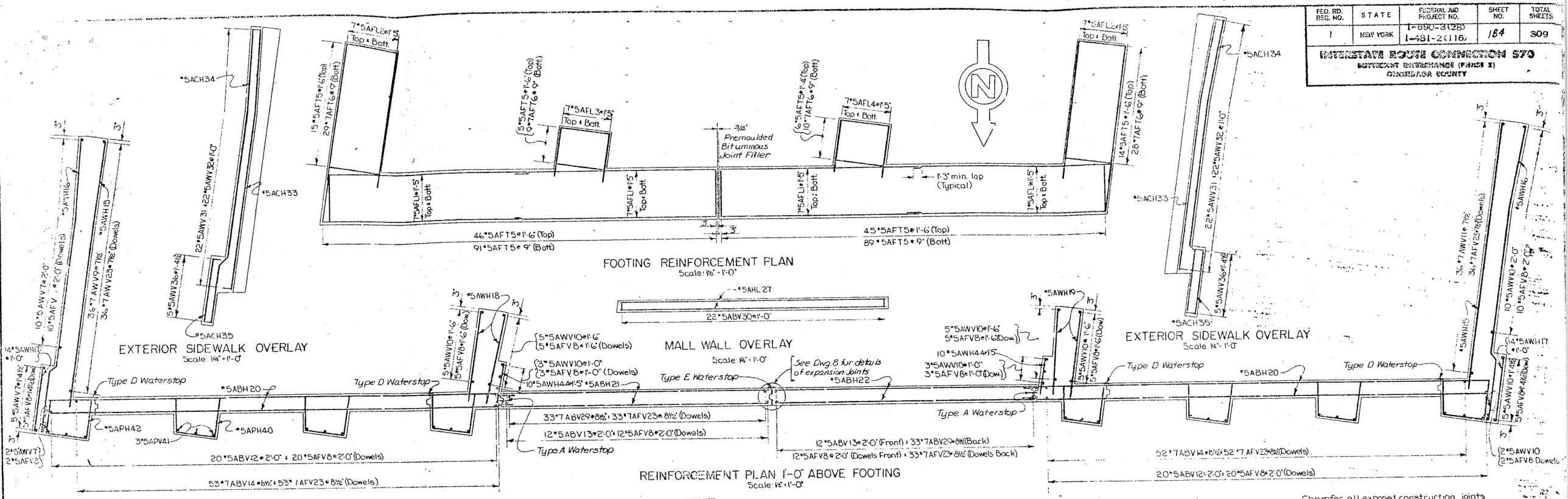

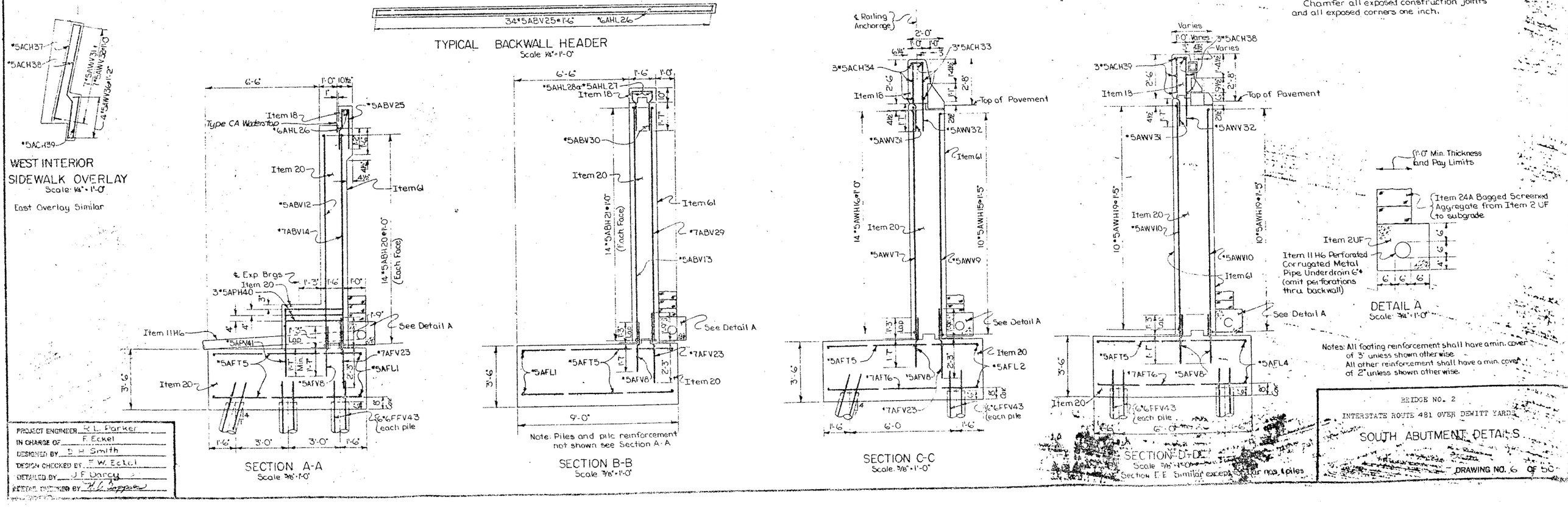

PROJECT ENGINEER R. L. Parker
IN CHARGE OF F. Eckel
DESIGNED BY D. H. Smith
DESIGN CHECKED BY F. W. Eckel
DETAILED BY J. F. Darcy
DETAIL CHECKED BY

BRIDGE NO. 2
INTERSTATE ROUTE 481 OVER DEWITT YARD
SOUTH ABUTMENT DETAILS

DRAWING NO. 6 OF 50

FED. RD. REG. NO.	STATE	FEDERAL AID PROJECT NO.	SHEET NO.	TOTAL SHEETS
1	NEW YORK	I-690-3(28) I-481-2(11)b	185	309

INTERSTATE ROUTE CONNECTION 570
BUTTERNUT INTERCHANGE (PHASE 2)
ONONDAGA COUNTY

Piles to be Cast-in-Place Concrete Piles, Item 85C
Estimated length of pile = 65 feet
For design purposes the pile load does not exceed 35 tons per pile.

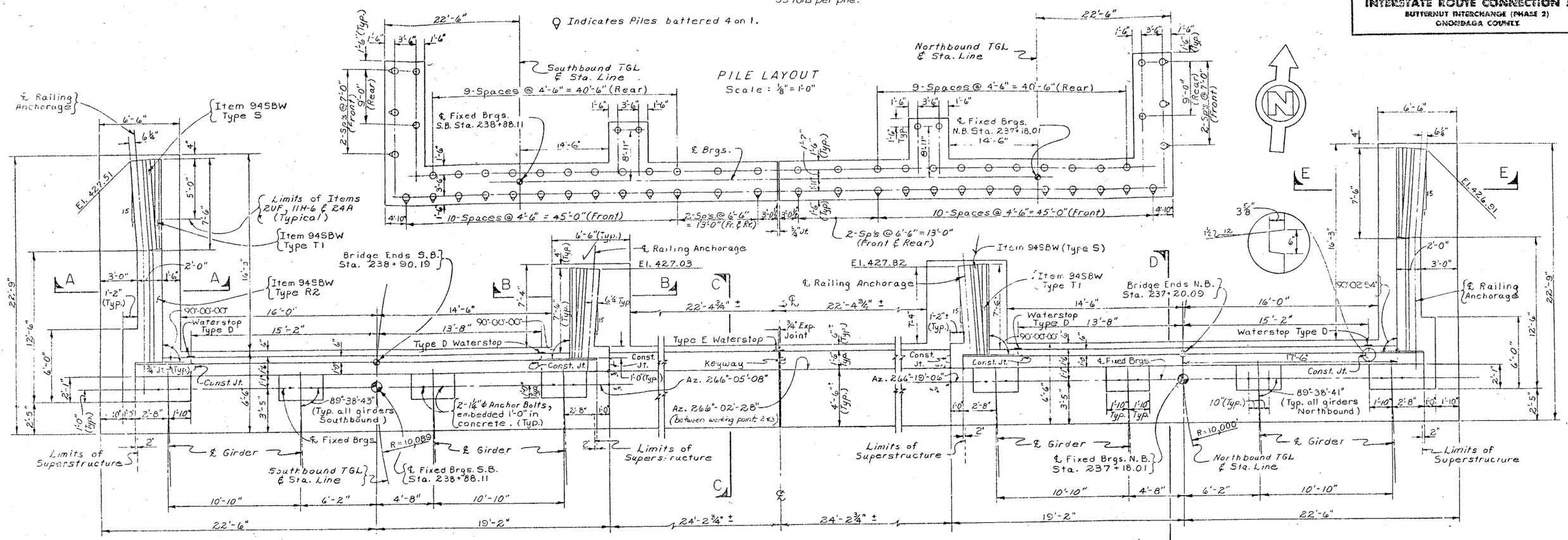

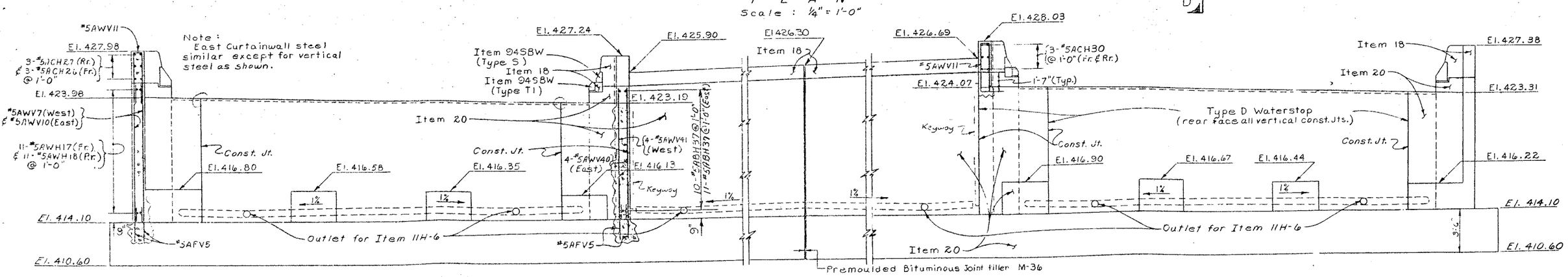

Note:
Piles not shown in Elevation.
Omit perforations in Item 11H-6 extension thru wall.

Note: Northwest overlays shown, Northeast similar by opposite hand.

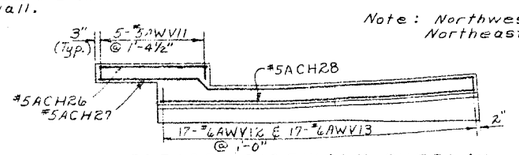

EXTERIOR SIDEWALK OVERLAY
Scale : 1/4" = 1'-0"

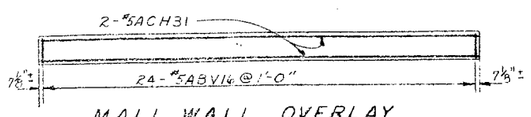

MALL WALL OVERLAY
Scale : 1/4" = 1'-0"

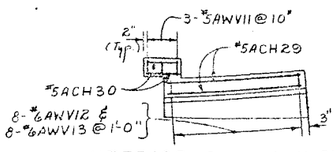

INTERIOR SIDEWALK OVERLAY
Scale: 1/4" = 1'-0"

PROJECT ENGINEER R. Parker
IN CHARGE OF E. Eckel
DESIGNED BY K. H. W. & Kaul
DESIGN CHECKED BY J. B. Sherman
DETAILED BY J. C. Thompson
DETAIL CHECKED BY D. H. South

BRIDGE NO. 2
INTERSTATE ROUTE 481 OVER DEWITT YARDS

NORTH ABUTMENTS

DRAWING NO. 7 OF 50

FED. RD. REG. NO.	STATE	FEDERAL AID PROJECT NO.	SHEET NO.	TOTAL SHEETS
1	NEW YORK	I-690-8 (28) I-481-2 (18)	186	307

INTERSTATE ROUTE CONSTRUCTION STD
DUTCHNOT BRIDGE (PIER 2)
ONONDAGA COUNTY

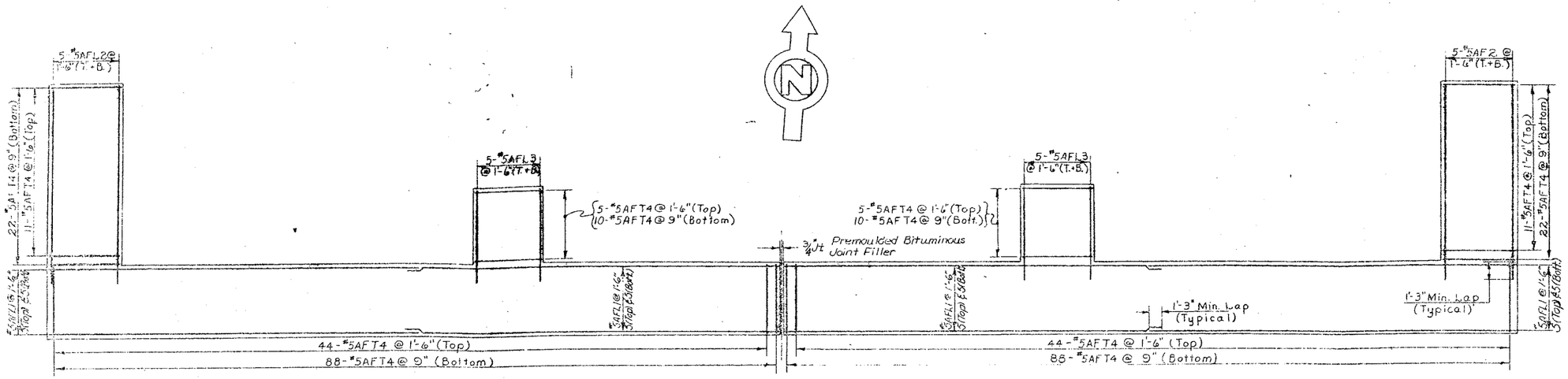

FOOTING REINFORCEMENT PLAN
Scale: 3/16" = 1'-0"

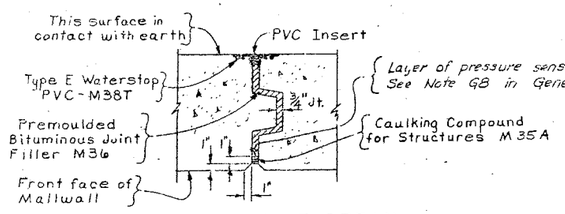

EXPANSION JOINT DETAIL
Scale: 1" = 1'-0"

REINFORCEMENT PLAN 1'-0" ABOVE FOOTING
Scale: 1/4" = 1'-0"

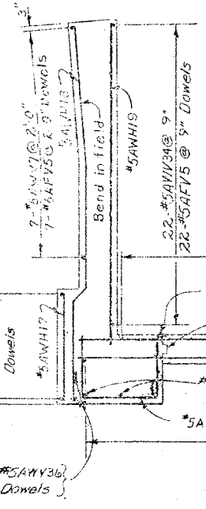

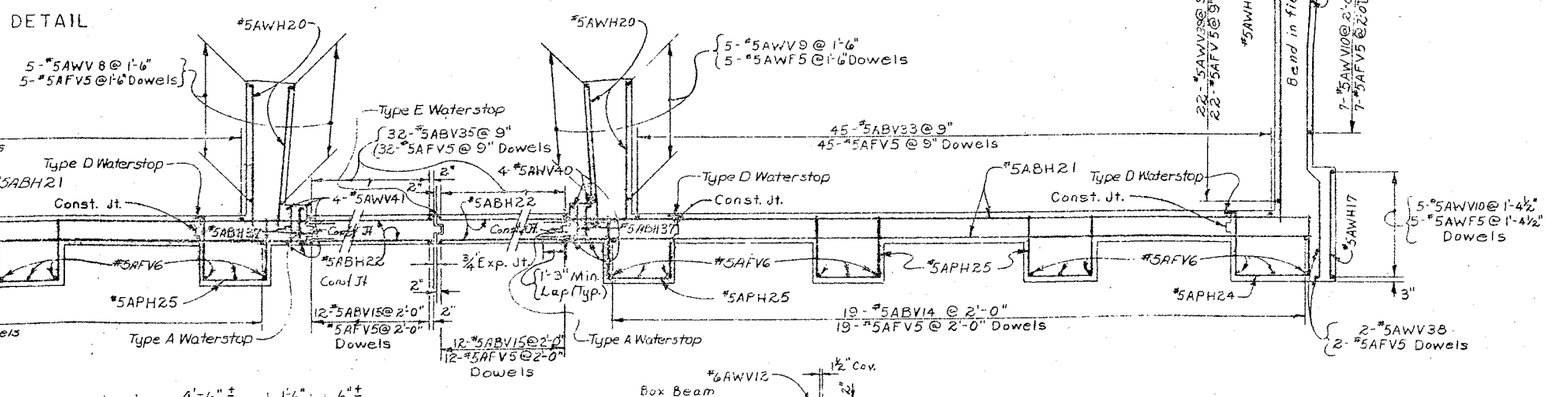

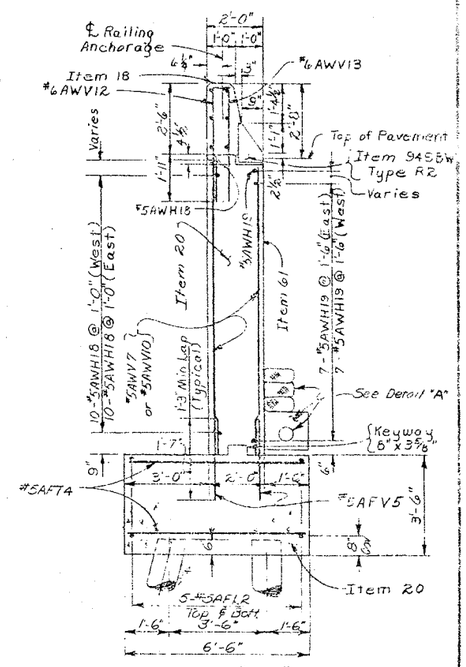

SECTION "A-A"
Scale: 3/16" = 1'-0"

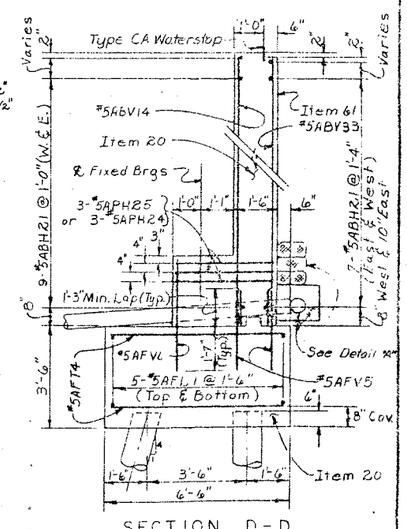

SECTION D-D
Scale: 3/8" = 1'-0"

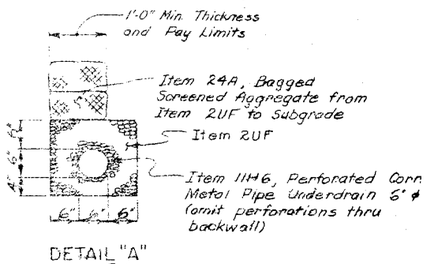

DETAIL "A"
Scale: 3/4" = 1'-0"

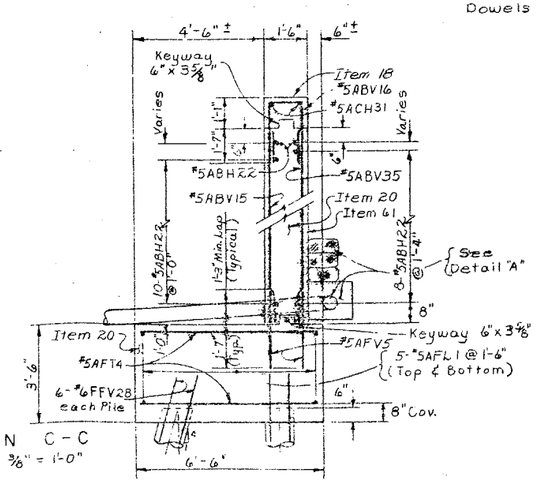

SECTION C-C
Scale: 3/8" = 1'-0"

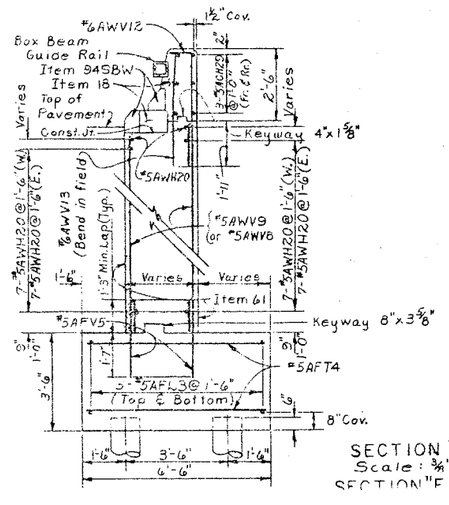

SECTION "B-B"
Scale: 3/8" = 1'-0"
SECTION "E-E" (Similar except for Pier No's and Piles)

Notes:-

See Drawing # 39 for Waterstops.

All footing reinforcement shall have a min. cover of 3" unless otherwise noted.

All other reinforcement shall have a min. cover of 2" unless otherwise noted.

All exposed construction joints shall be chamfered one inch.

All exposed corners shall be chamfered one inch.

PROJECT ENGINEER R. Parker
IN CHARGE OF J. E. Kiel
DESIGNED BY K. Wachter
DESIGN CHECKED BY K. Pao, E. H. Jensen
DETAILED BY J. Dunwat & J. C. C.
DETAIL CHECKED BY C. H. Smith

BRIDGE NO. 2
INTERSTATE ROUTE 481 OVER DEWITT YARDS

NORTH ABUTMENT DETAILS

DRAWING NO. 8 OF 5

FED. RD. REG. NO.	STATE	FEDERAL AID PROJECT NO.	SHEET NO.	TOTAL SHEETS
1	NEW YORK	(-080-3(26) 1-481-2(116)	187	309

INTERSTATE ROUTE CONSTRUCTION 570
DEWITT INTERCHANGE (PHASE 2)
ONONDAGA COUNTY

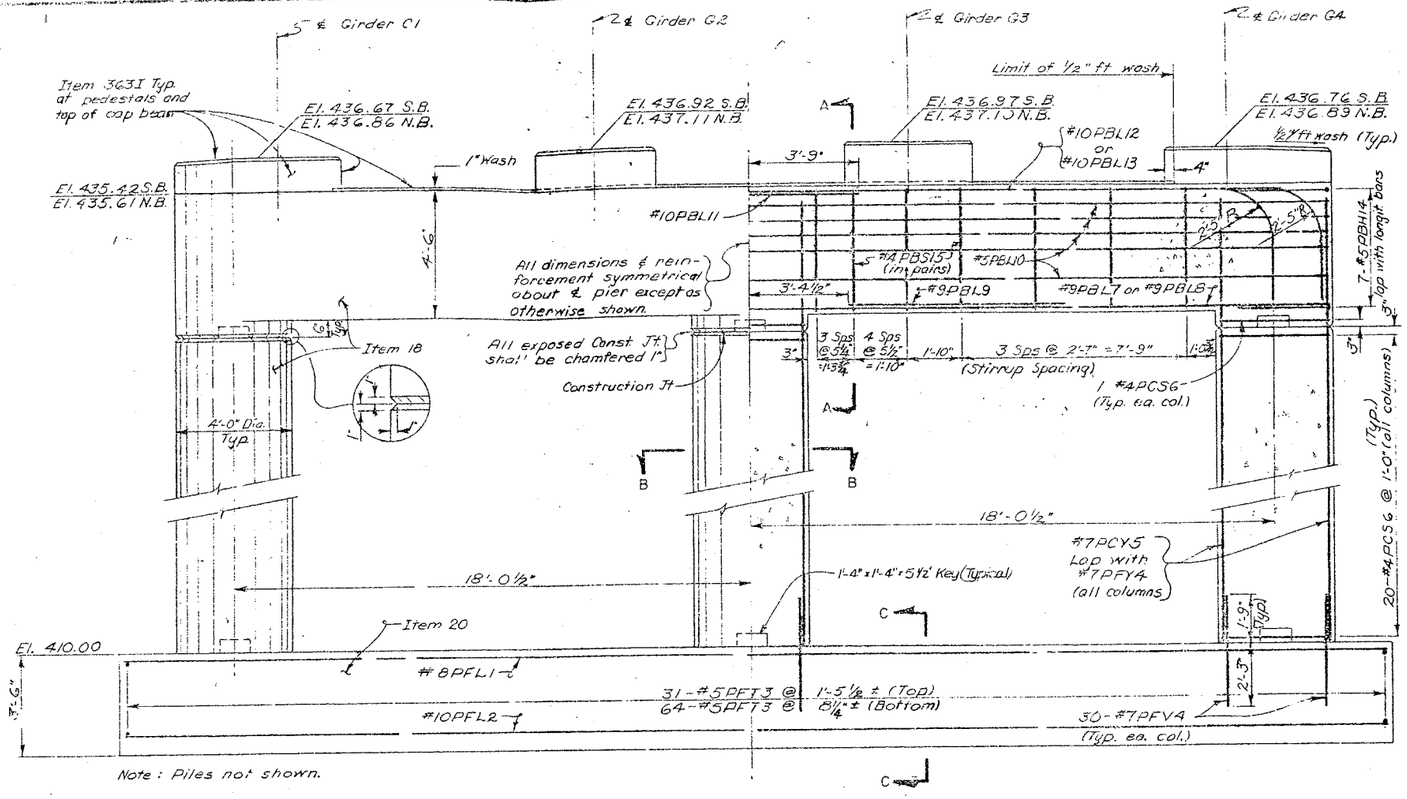

ELEVATION
Scale: 3/8" = 1'-0"

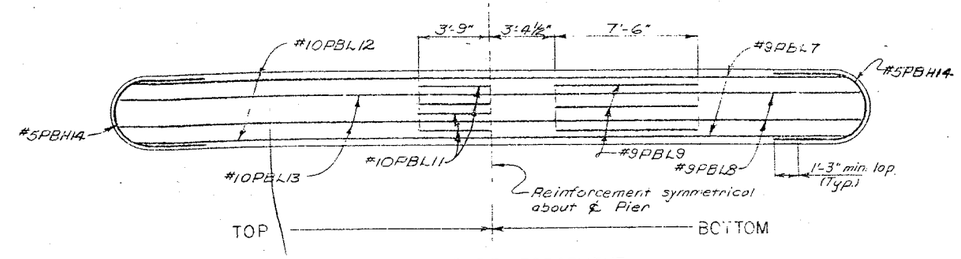

PIER CAP REINFORCEMENT
Scale: 1/4" = 1'-0"

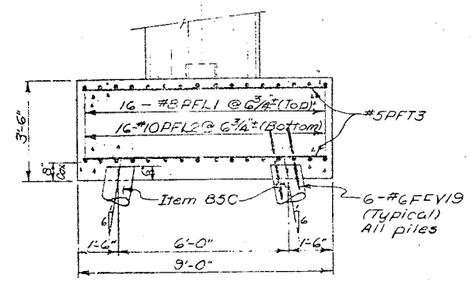

SECTION C-C
Scale: 3/8" = 1'-0"

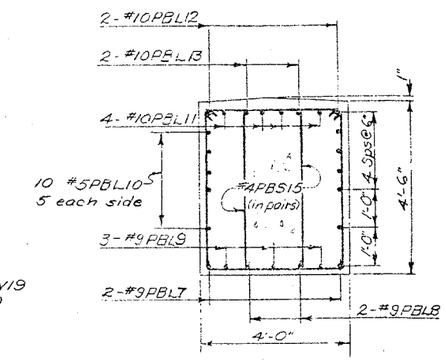

SECTION A-A
Scale: 1/2" = 1'-0"

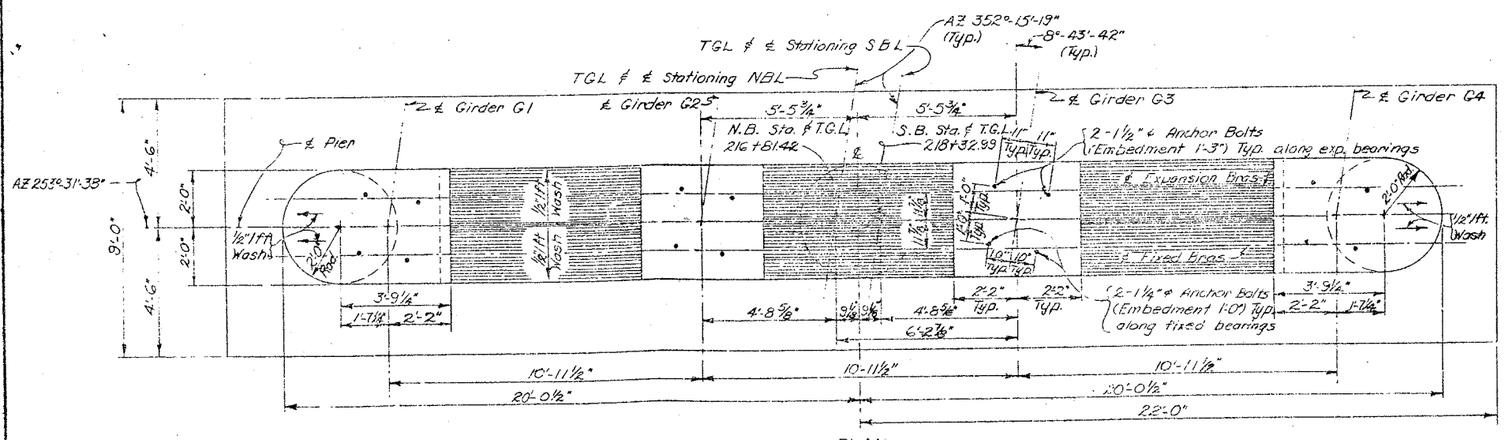

PLAN
Scale: 3/16" = 1'-0"

Indicates battered piles (6 on 1)

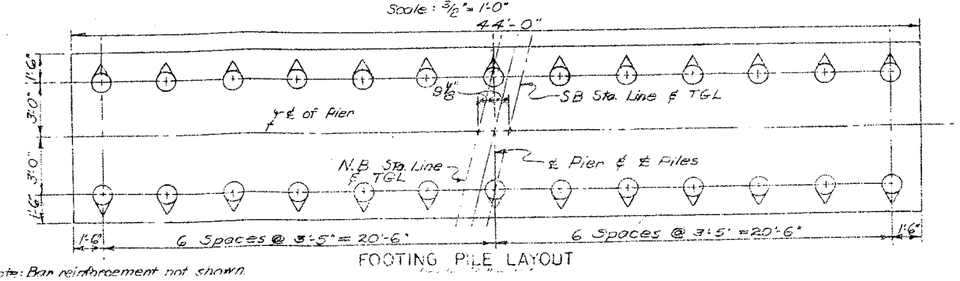

FOOTING PILE LAYOUT

Note: Bar reinforcement not shown.

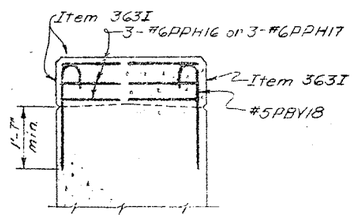

SECTION D-D
Scale: 1/2" = 1'-0"

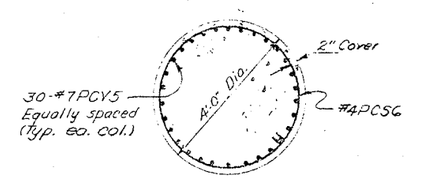

SECTION B-B
Scale: 1/2" = 1'-0"

Notes:
All footing reinforcement shall have a min. cover of 3" unless otherwise shown.
All other reinforcement shall have a min. cover of 2" unless otherwise shown.
Estimated length of cast-in-place concrete piles = 55' South bound and 65' North bound.
For design purposes the pile load does not exceed 35 tons per pile.
For details of pile reinforcement see Drawing No. 42

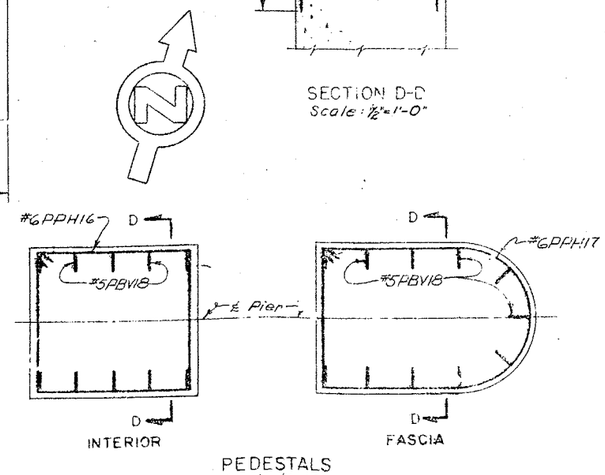

PEDESTALS
Scale: 1/2" = 1'-0"

PROJECT ENGINEER	R. L. Parker
IN CHARGE OF	F. Eckel
DESIGNED BY	N. A. Tolkes
DESIGN CHECKED BY	A. Thimble
DETAILED BY	J. T. Thorpe
DETAIL CHECKED BY	W. C. Stroud

BRIDGE NO. 2
INTERSTATE ROUTE 481 OVER DEWITT YARDS

PIER 1 (NB & SB)

DRAWING NO. 3 [illegible]

FED. RD. REG. NO.	STATE	FEDERAL AID PROJECT NO.	SHEET NO.	TOTAL SHEETS
1	NEW YORK	I-530-8(26) I-481-2(116)	188	309

INTERSTATE ROUTE CONNECTION 570
BETTERMENT IMPROVEMENTS (PHASE 2)
ONONDAGA COUNTY

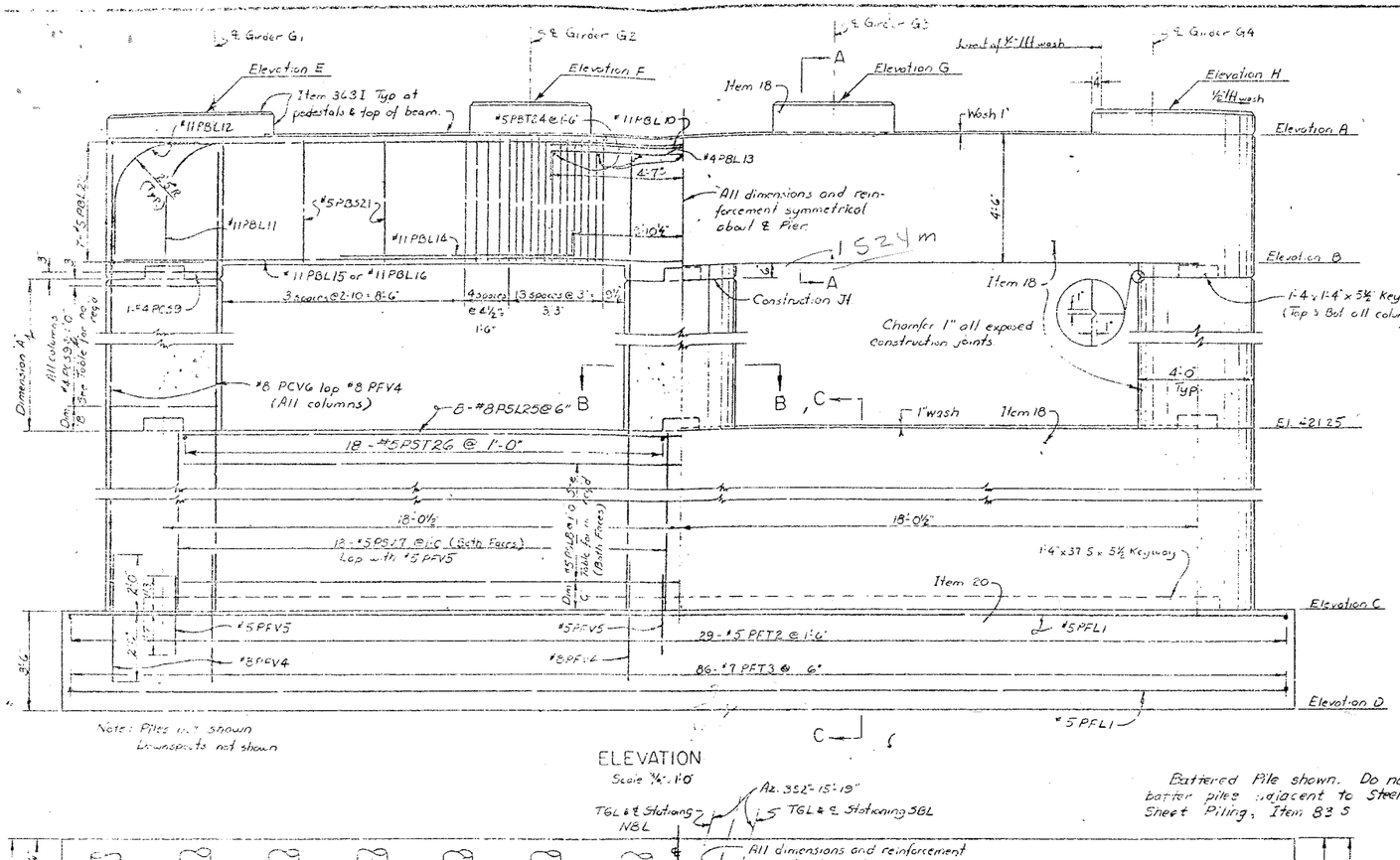

ELEVATION
Scale 3/16" = 1'-0"

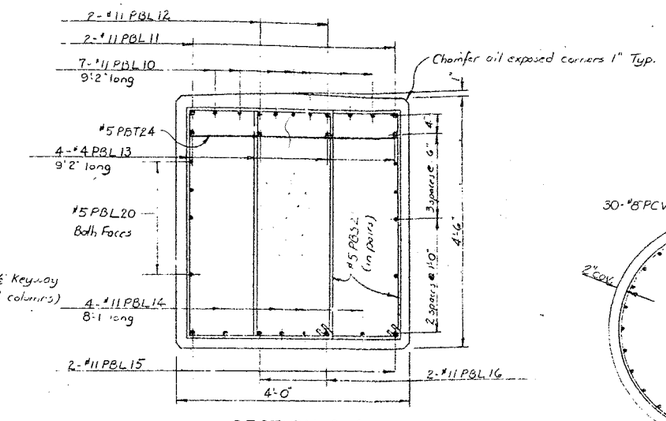

SECTION A-A
Scale 3/4" = 1'-0"

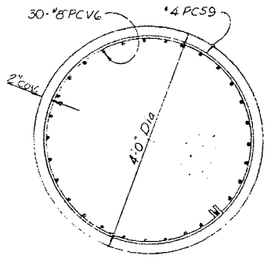

SECTION B-B
Scale 3/4" = 1'-0"

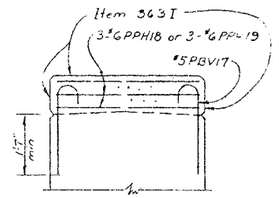

SECTION D-D
Scale 1/2" = 1'-0"

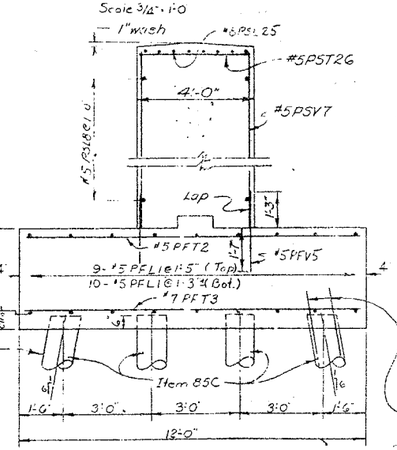

SECTION C C
Scale 3/8" = 1'-0"

Note All footing reinforcement shall have a min. cover of 3" unless otherwise shown.
All other reinforcement shall have a min cover of 2" unless otherwise shown.
Estimated length of cast-in-place concrete piles Pier #2 SB 55' long, Pier #2 NB & Pier #3 SB 60' long, Pier #3 NB 65' long, & Pier #4 NB & SB 70' long
For design purposes the pile load does not exceed 35 tons/pile.

Downspouts to be paid for under Item 13DE Each hopper to be drained by one downspout attached to each exterior column See drawing #32 for details

Battered Pile shown. Do not batter piles adjacent to Steel Sheet Piling, Item 83S

#6 FFV23 For details of pile reinforcement see Drawing No 42

STATION "A"	NBL	SBL
PIER 2	218+37.59	219+89.15
PIER 3	220+08.76	221+60.32
PIER 4	222+06.76	223+58.32

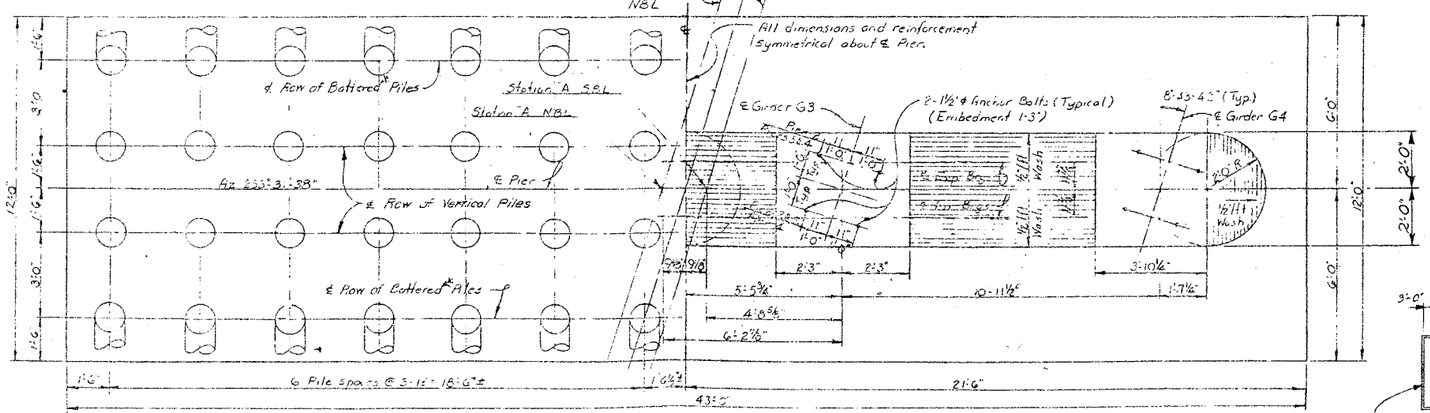

FOOTING PILE LAYOUT
Scale 3/8" = 1'-0"

* Piles adjacent to Steel Sheet Piling shall not be battered.

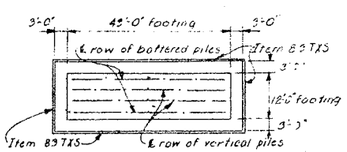

PIERS 3 SB & 3 NB

PIER DATA

DESCRIPTION	NORTHBOUND PIER 2	NORTHBOUND PIER 3	NORTHBOUND PIER 4	SOUTHBOUND PIER 2	SOUTHBOUND PIER 3	SOUTHBOUND PIER 4
ELEVATION A	437.00	438.00	438.50	437.00	438.00	438.50
" B	432.50	433.50	434.00	432.50	433.50	434.00
" C	411.00	413.00	412.80	411.00	413.00	412.80
" D	407.50	409.50	409.30	407.50	409.50	409.30
" E	438.42	439.47	439.83	438.28	439.38	439.80
" F	438.66	439.70	440.09	438.52	439.61	440.05
" G	438.64	439.68	440.04	438.56	439.65	440.08
" H	438.43	439.46	439.79	438.35	439.43	439.83
DIM A	10.75'	11.75'	12.25'	10.75'	11.75'	12.25'
" B	6"	6"	1'-0"	6"	6	1'-0"
NO. PCS9 per col.	12	13	13	12	13	13
DIM C	1'-0"	1'-0"	3"	1'-0"	1'-0"	3"
NO. PSL8 per pier	20	16	18	20	16	18

For details of Steel Sheet Piling, Item 83S, see Drawing No 4.

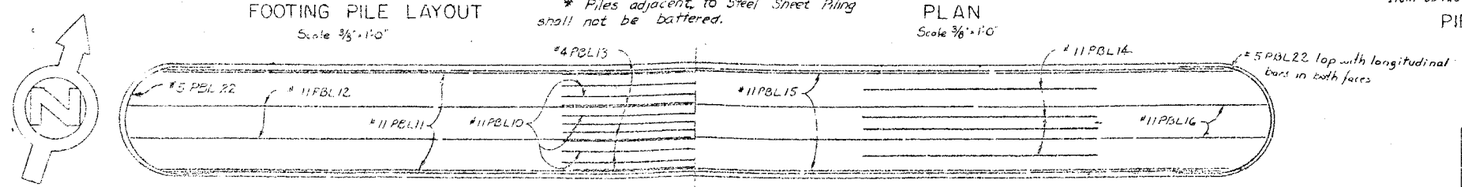

Reinforcement symmetrical about ℄ Pier

TOP — BOTTOM

PIER CAP REINFORCEMENT
Scale 3/8" = 1'-0"

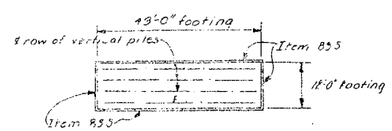

PIERS 2 & 4 SB, 2 & 4 NB

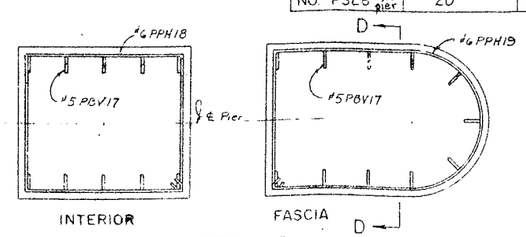

INTERIOR FASCIA

PEDESTALS
Scale 1/2" = 1'-0"

PROJECT ENGINEER	[illegible]
IN CHARGE OF	[illegible]
DESIGNED BY	[illegible]
DESIGN CHECKED BY	[illegible]
DETAILED BY	[illegible]
DETAIL CHECKED BY	[illegible]

BRIDGE NO. 2
INTERSTATE ROUTE 481 OVER DEWITT YARDS

PIERS #2, #3, #4 (NB & SB)

DRAWING NO. 10 OF 30

FED. RD. REG. NO.	STATE	FEDERAL AID PROJECT NO.	SHEET NO.	TOTAL SHEETS
	NEW YORK	I-681-2(116)	189	309

INTERSTATE ROUTE CONNECTION 570
RUTTSHUT INTERCHANGE (PHASE 2)
ONONDAGA COUNTY

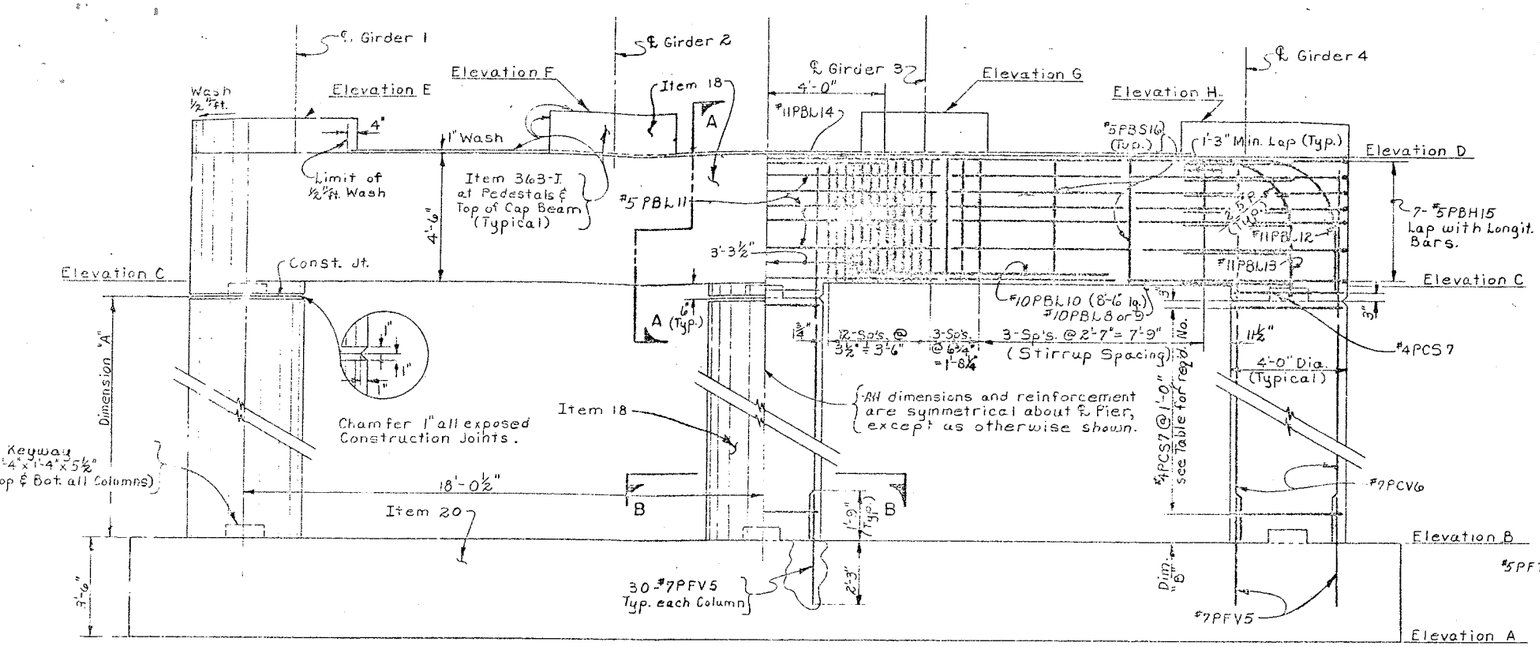

Notes:

Piles and Downspouts not shown.
Footing reinforcement not shown.

ELEVATION
Scale: ⅜"=1'-0"

Notes:

All footing reinforcement shall have a minimum cover of 3" unless otherwise shown.

All other reinforcement shall have a minimum cover of 2" unless otherwise shown.

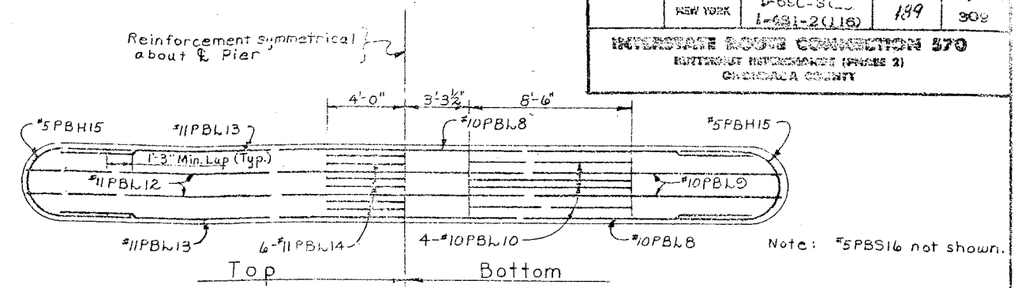

Note: #5PBS16 not shown.

PIER CAP REINFORCEMENT
Scale: ¼"=1'-0"

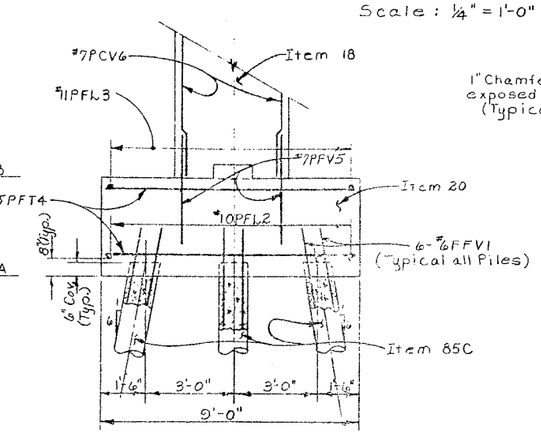

END SECTION
Scale: ⅜"=1'-0"

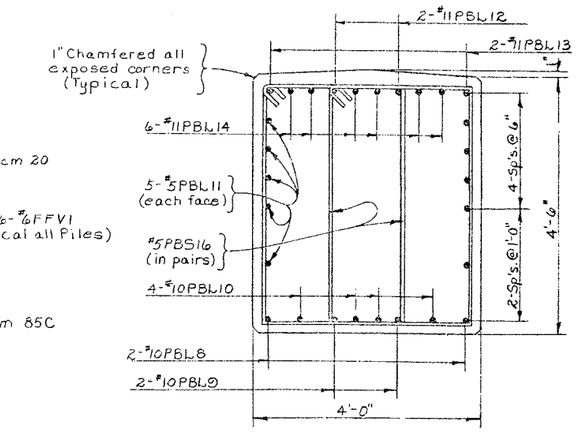

SECTION A-A
Scale: ¾"=1'-0"

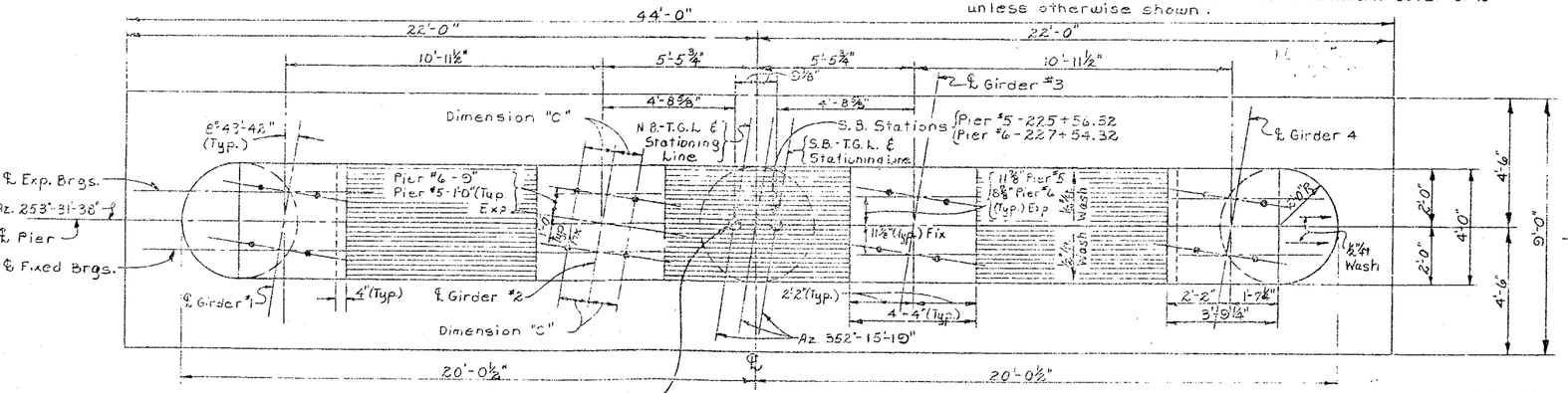

PLAN
Scale: ⅜"=1'-0"

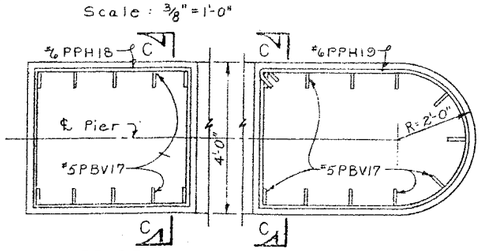

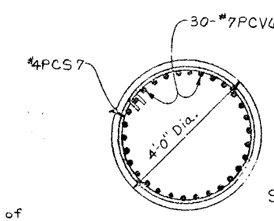

SECTION B-B
Scale: ½"=1'-0"

PEDESTAL REINFORCEMENT
Scale: ½"=1'-0"

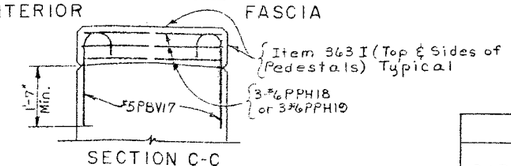

SECTION C-C

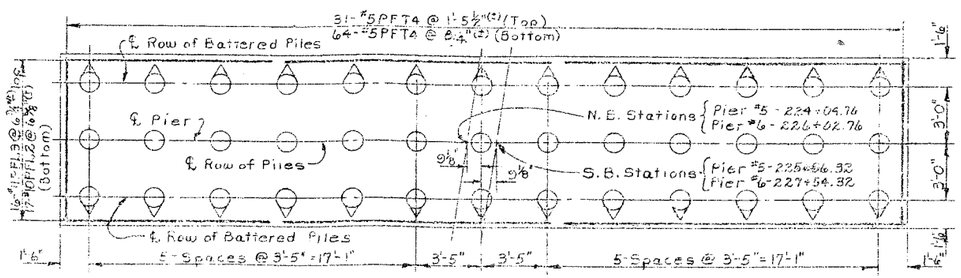

FOOTING REINFORCEMENT PLAN & PILE LAYOUT
Scale: ¼"=1'-0"

Note:

For Design Purposes the pile load does not exceed 85 Tons per Pile.

Indicates Piles Battered 6 on 1

Estimated length of Cast-in-Place Piles:

Pier #5 S.B. = 75'
Pier #5 N.B. = 60'
Pier #6 S.B. = 80'
Pier #6 N.B. = 80'

PIER DATA

DESCRIPTION	PIER No. 5 N.B.	PIER No. 5 S.B.	PIER No. 6 N.B.	PIER No. 6 S.B.
ELEVATION A	409.30	409.30	410.50	407.30
" " B	412.80	412.80	414.00	410.80
" " C	433.45	433.55	431.96	432.12
" " D	437.95	436.05	436.46	436.62
" " E	439.26	439.30	437.79	437.88
" " F	439.50	439.54	438.00	438.10
" " G	439.46	439.56	437.95	438.11
" " H	439.20	439.30	437.71	437.87
DIM. A	20'-2"	20'-3"	17'-5½"	20'-10"
DIM. B	11"	1'-0"	3"	7"
NO. HOOPS	21	21	19	22

ANCHOR BOLT DATA

GIRDER		PIER NO. 5 S.B. & N.B. ϕ BOLT	REQ'D. EMBED.	DIM. C	PIER NO. 6 N.B. & S.B. ϕ BOLT	REQ'D. EMBED.	DIM. C
FIXED BRGS.	G1	1½"	1'-3"	1'-0"	1½"	1'-3"	1'-0"
	G2	1½"	1'-3"	1'-0"	1½"	1'-3"	1'-0"
	G3	1½"	1'-3"	1'-0"	1½"	1'-3"	1'-0"
	G4	1½"	1'-3"	1'-0"	1½"	1'-3"	1'-0"
EXP BRGS.	G1	1½"	1'-3"	1'-0"	1½"	1'-3"	1'-0"
	G2	1½"	1'-3"	1'-0"	1¼"	1'-0"	10"
	G3	1½"	1'-3"	1'-0"	1¼"	1'-0"	10"
	G4	1½"	1'-3"	1'-0"	1½"	1'-3"	1'-0"

BRIDGE NO. 2
INTERSTATE ROUTE 481 OVER DEWITT YARDS

PIERS 5 & 6 (N.B. & S.B.)

DRAWING NO. 11 OF 50

PROJECT ENGINEER P. Parker
CHARGE OF I. Eckel
DESIGNED BY J. D. Tumbas
DESIGN CHECKED BY N. Toppuzis
DETAILED BY J. C. Thompson
DETAIL CHECKED BY W. J. Speed

FED. RD. REG. NO.	STATE	FEDERAL AID PROJECT NO.	SHEET NO.	TOTAL SHEETS
1	NEW YORK	I-680-3(28) I-481-2(116)	170	570

BRIDGE NO. 2 OVER DEWITT YARDS (RAMP 2)
ONONDAGA COUNTY

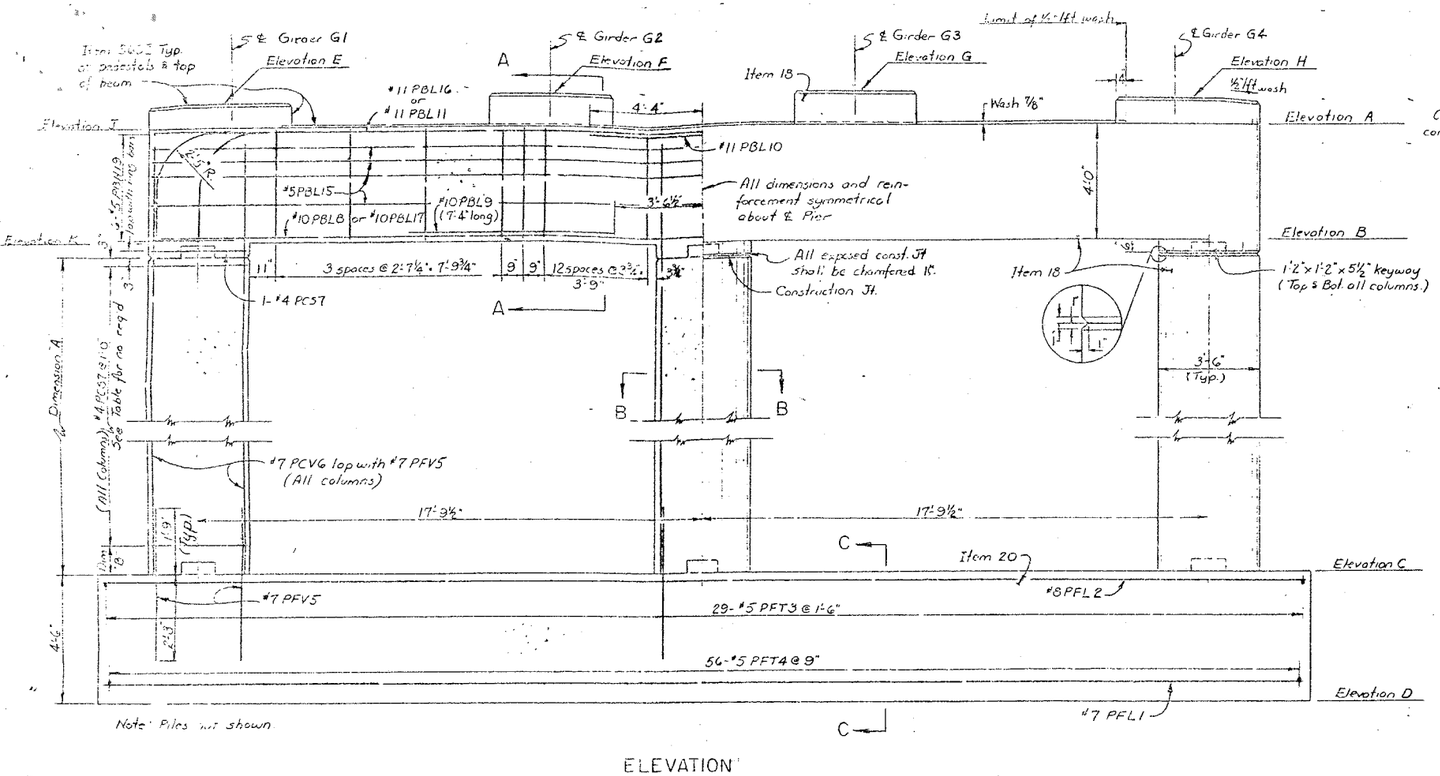

ELEVATION
Scale 3/8" = 1'-0"

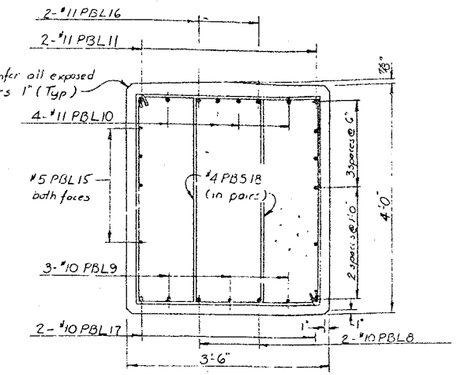

SECTION A-A
Scale 3/4" = 1'-0"

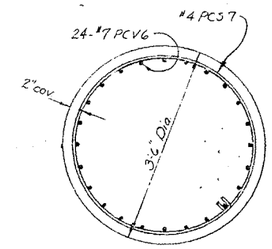

SECTION B-B
Scale 3/4" = 1'-0"

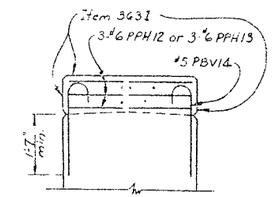

SECTION D-D
Scale ½" = 1'-0"

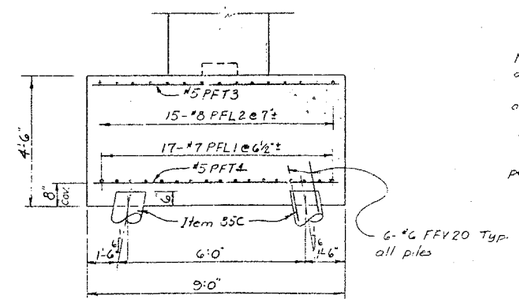

SECTION C-C
Scale 3/8" = 1'-0"

Note. All footing reinforcement shall have a min. cover of 3" unless otherwise shown.
All other reinforcement shall have a min. cover of 2" unless otherwise shown.
Estimated length of cast-in-place concrete piles = 80' at Pier 7 NB & SB, 70' at Pier 8 NB & SB and Pier 9 NB
For design purposes the pile load does not exceed 35 tons per pile.

For details of pile reinforcement see Drawing No. 42

STATION "A"

	NBL	SBL
PIER 7	227+26.76	228+78.32
PIER 8	228+50.76	230+02.32
PIER 9	229+74.76	

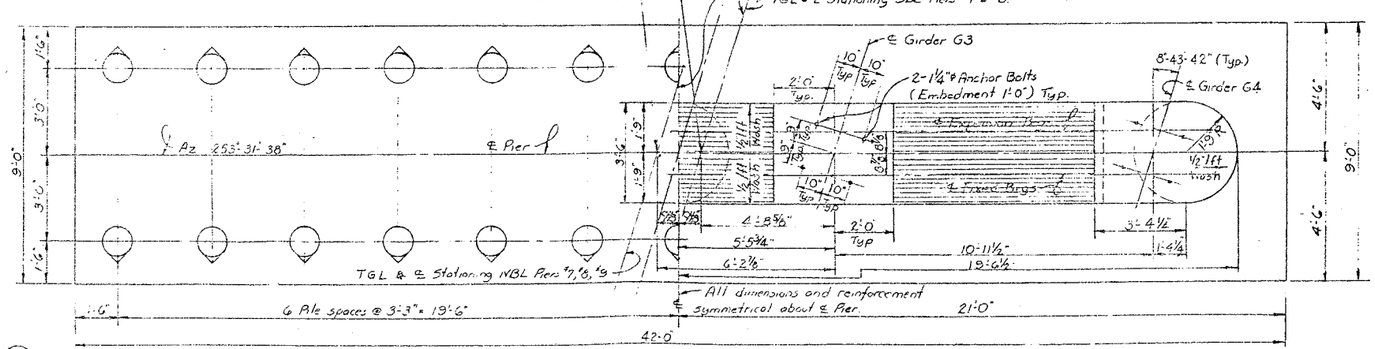

Indicates battered piles. (4 on 11)

FOOTING PILE LAYOUT
Scale 3/8" = 1'-0"

PLAN
Scale 3/8" = 1'-0"

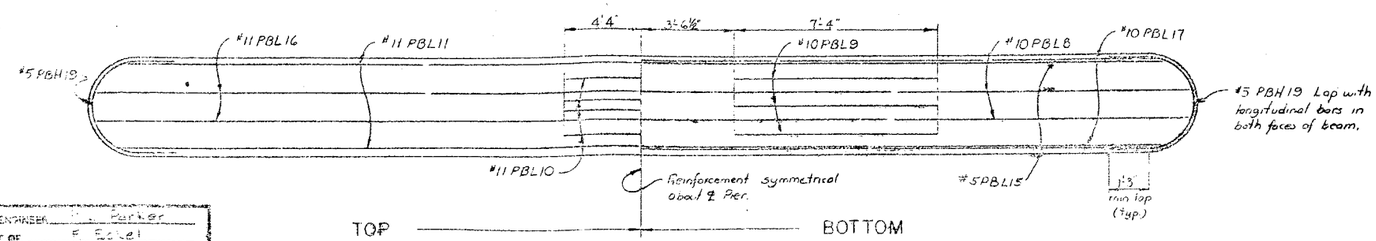

PIER CAP REINFORCEMENT
Scale 3/8" = 1'-0"

PIER DATA

DESCRIPTION	NORTHBOUND PIER 7	NORTHBOUND PIER 8	NORTHBOUND PIER 9	SOUTHBOUND PIER 7	SOUTHBOUND PIER 8
ELEVATION A	438.29	436.51	434.36	438.49	436.74
" B	434.29	432.51	430.36	434.49	432.74
" C	410.00	408.80	407.70	409.00	408.00
" D	405.50	404.30	403.20	404.50	403.50
" E	439.39	437.62	435.69	439.52	437.79
" F	439.59	437.82	435.74	439.73	437.99
" G	439.54	437.76	435.62	439.74	438.00
" H	439.29	437.51	435.36	439.49	437.74
DIM A	23.79	23.21	22.16	24.99	24.24
" B	6½"	11½"	11"	9"	1'-0"
NO. HOOPS	24	23	22	25	24
ELEVATION J	438.29	436.51	434.69	438.49	436.74
ELEVATION K	434.29	432.51	430.69	434.49	432.74

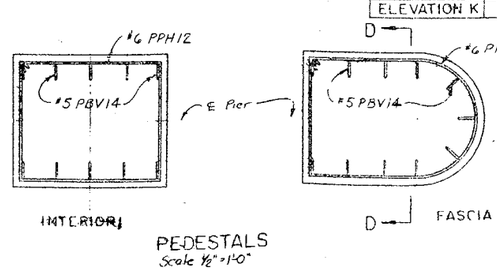

PEDESTALS
Scale 1/2" = 1'-0"

BRIDGE NO. 2
INTERSTATE ROUTE 481 OVER DEWITT YARDS

PIERS 7 & 8 NBL & SBL, PIER 9 NBL
DRAWING NO. 12 OF 50

PROJECT ENGINEER: L. Parker
IN CHARGE OF: F. Fogel
DESIGNED BY: E. Howe
DESIGN CHECKED BY: L. A. Torres
DETAILED BY: [illegible]
DETAIL CHECKED BY: S. Pierce

FED. RD. REG. NO.	STATE	FEDERAL AID PROJECT NO.	SHEET NO.	TOTAL SHEETS
1	NEW YORK	I-090-8(28) I-431-2(116)	191	309

INTERSTATE ROUTE CONSTRUCTION 570
BITTERCUT INTERCHANGE (PHASE 2)
ONONDAGA COUNTY

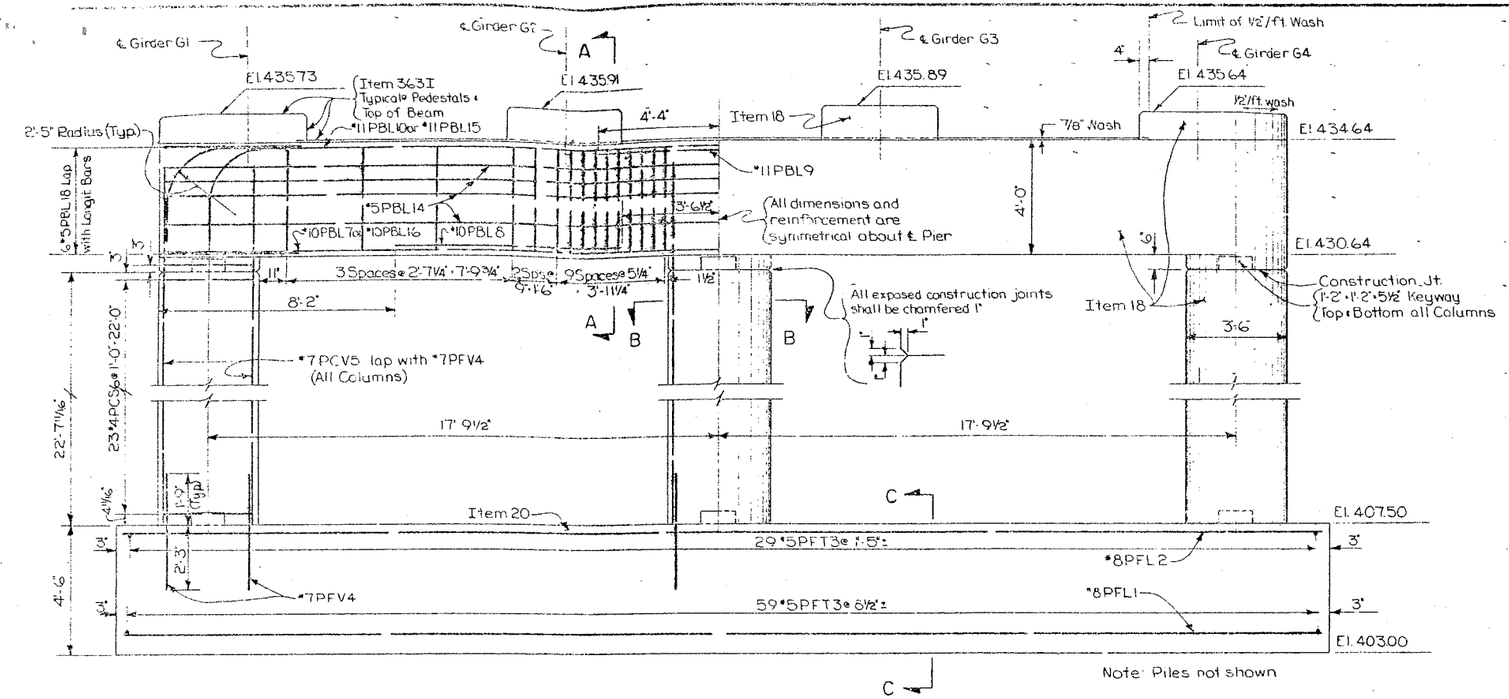

ELEVATION
Scale: 3/8" = 1'-0"

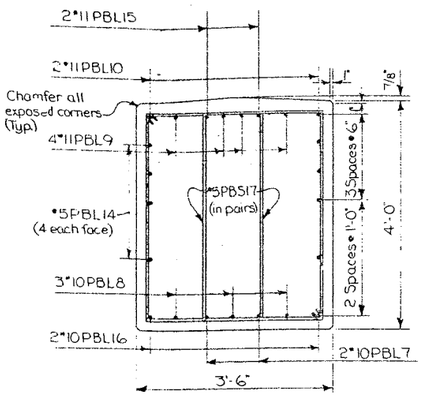

SECTION A-A
Scale: 3/4" = 1'-0"

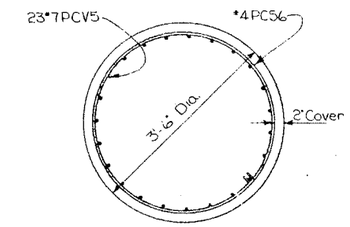

SECTION B-B
Scale: 3/4" = 1'-0"

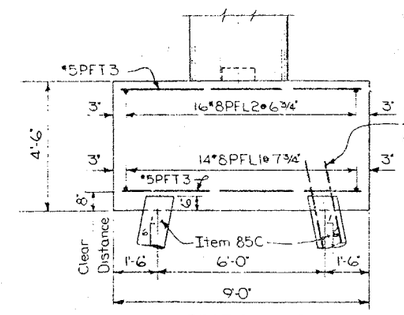

SECTION C-C
Scale: 3/8" = 1'-0"

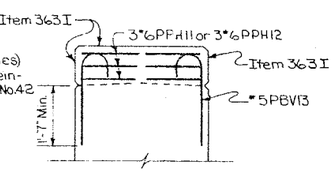

SECTION D-D
Scale: 1/2" = 1'-0"

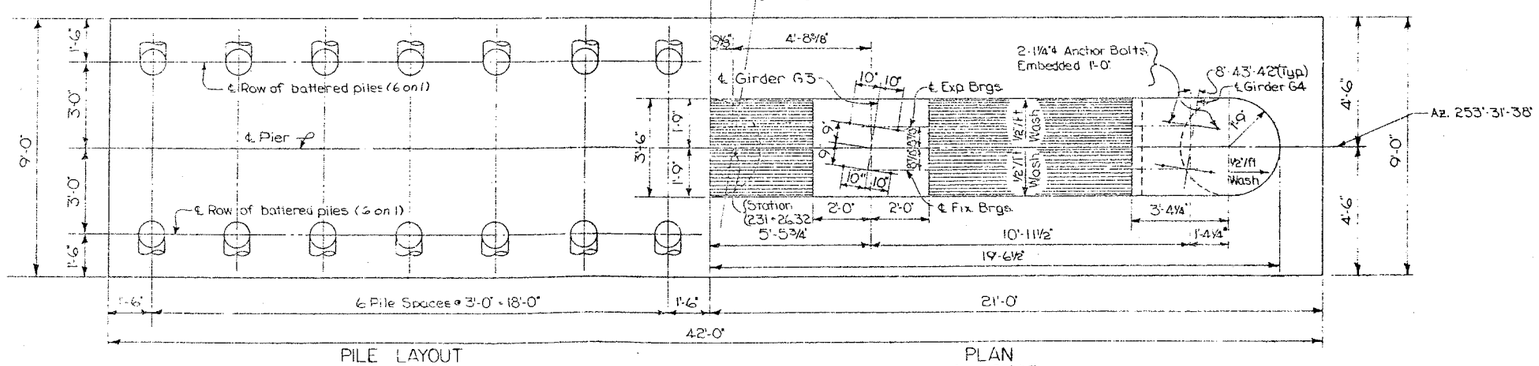

PILE LAYOUT
Scale: 3/8" = 1'-0"

PLAN
Scale: 3/8" = 1'-0"

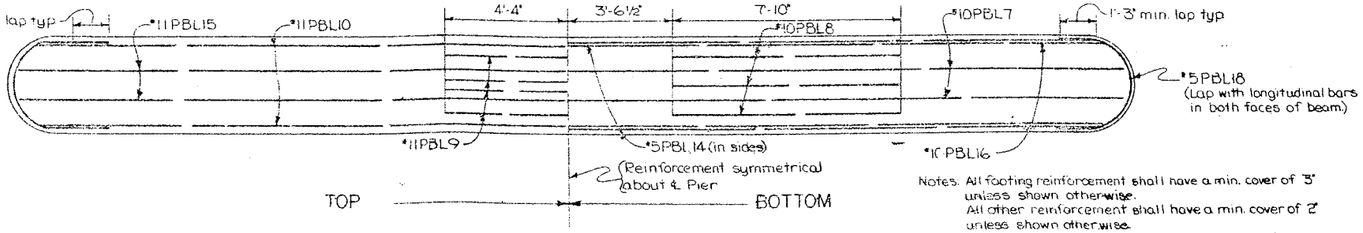

PIER CAP REINFORCEMENT
Scale: 3/8" = 1'-0"

Notes. All footing reinforcement shall have a min. cover of 3" unless shown otherwise.
All other reinforcement shall have a min. cover of 2" unless shown otherwise.
Estimated length of concrete cast-in-place piles = 70'. For design purposes the pile load does not exceed 35 tons per pile.

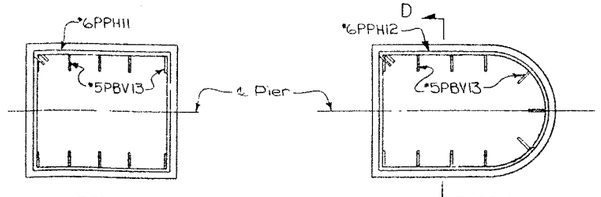

INTERIOR

PEDESTALS
Scale: 1/2" = 1'-0"

PROJECT ENGINEER E. L. Parker
IN CHARGE OF F. Eckel
DESIGNED BY S. Rowe
DESIGN CHECKED BY N. A. Toppres
DETAILED BY J. Darcy
DETAIL CHECKED BY S. Rowe

BRIDGE NO. 2
INTERSTATE ROUTE 481 OVER DEWITT YARDS

PIER 9 (SB)

DRAWING NO. 13 OF 50

FED. RD. REG. NO.	STATE	FEDERAL AID PROJECT NO.	SHEET NO.	TOTAL SHEETS
1	NEW YORK	F-690-3(28) 481-2(116)	192	309

INTERSTATE ROUTE CONNECTION 570
BUFFERNUT INTERCHANGE (PHASE 2)
ONONDAGA COUNTY

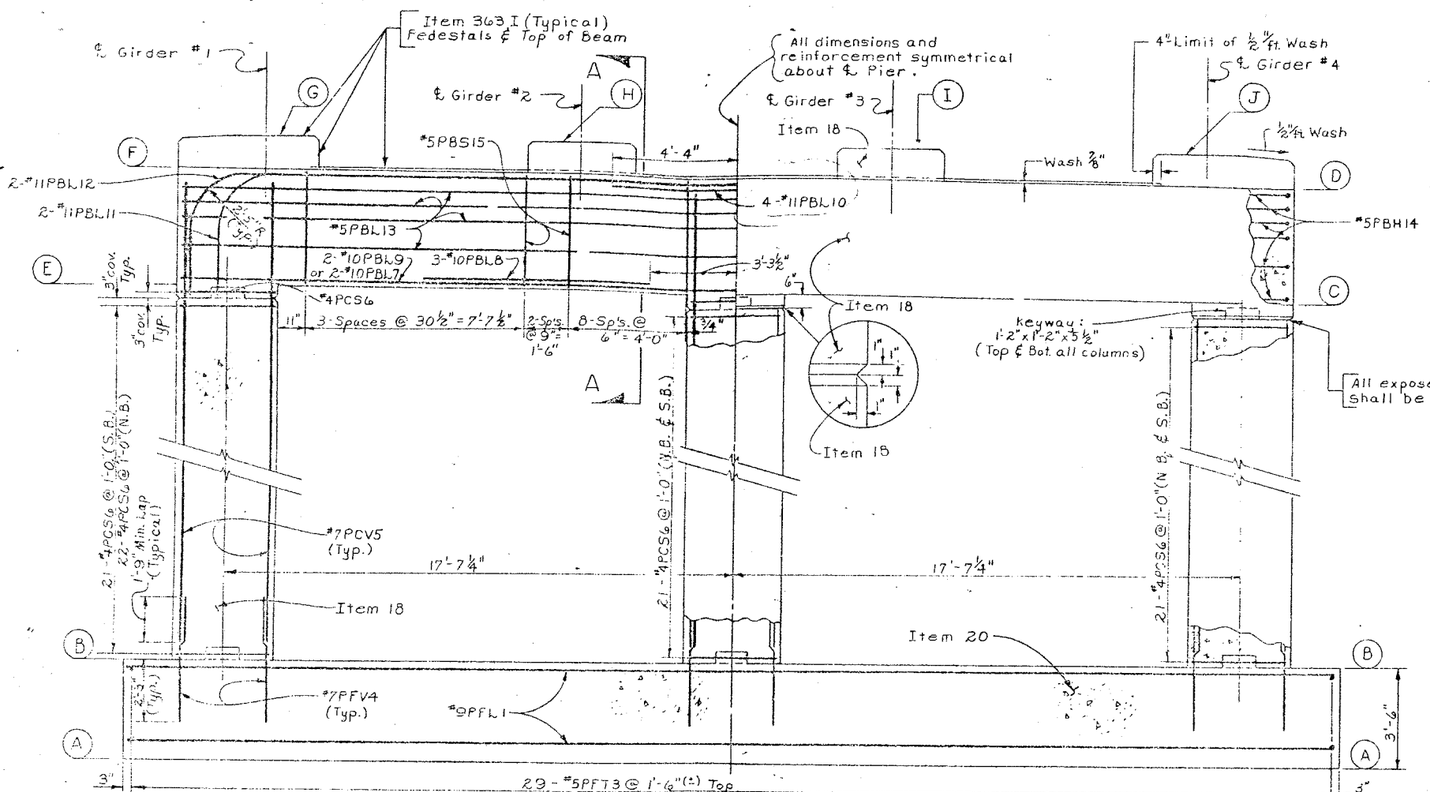

ELEVATION
Scale: ⅜" = 1'-0"

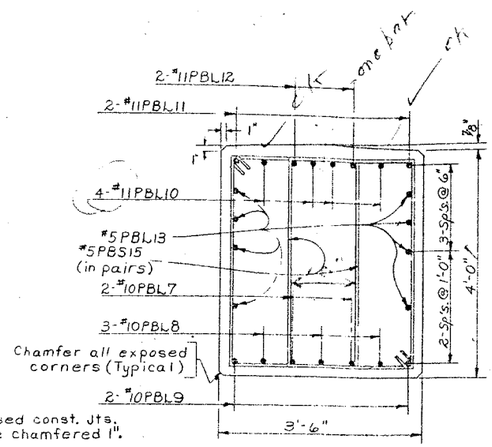

SECTION A-A
Scale: ¾" = 1'-0"

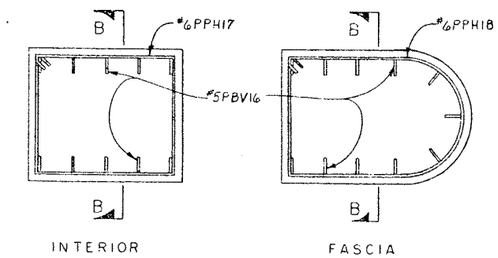

PEDESTAL REINFORCEMENT
Scale: ½" = 1'-0"

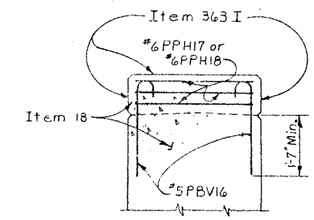

SECTION B-B
Scale: ½" = 1'-0"

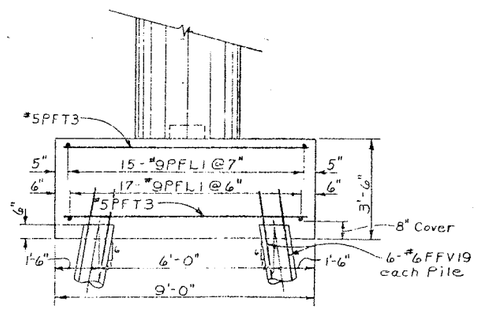

END VIEW
Scale: ⅜" = 1'-0"

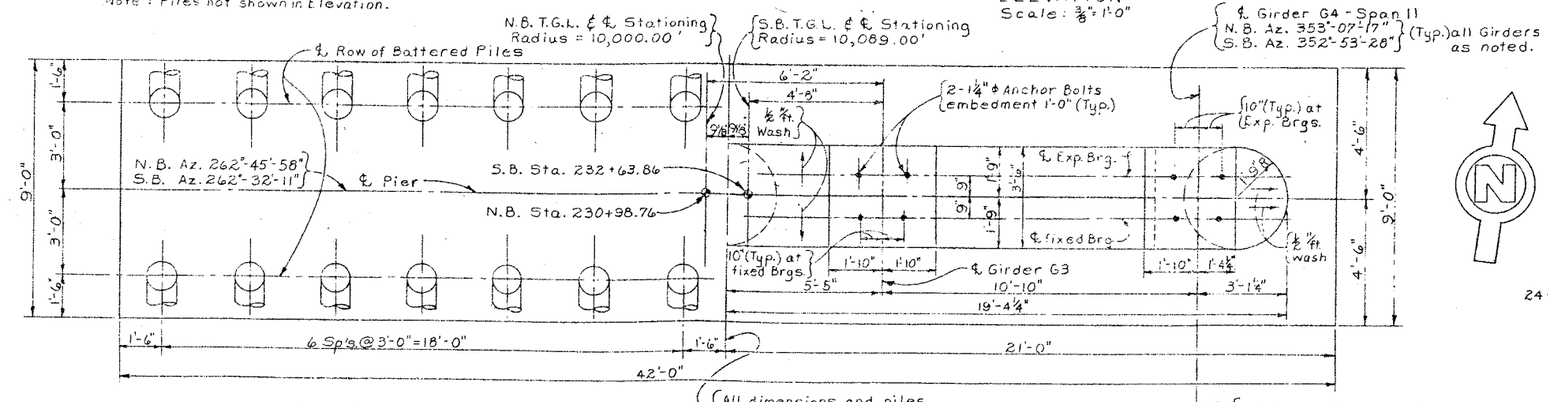

PILE LAYOUT
Scale: ⅜" = 1'-0"

PLAN
Scale: ⅜" = 1'-0"

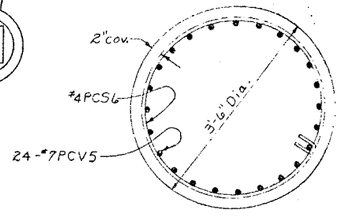

TYPICAL COLUMN SECTION
Scale: ¾" = 1'-0"

Notes:
All footing reinforcement shall have a min. cover of 3" unless otherwise shown.
All other reinforcement shall have a min. cover of 2" unless otherwise shown.
Estimated length of Cast-in-Place concrete piles = 70'-0" S.B. & 65'-0" N.B.
For Design Purposes the pile load does not exceed 35 Tons per Pile.
For details of Cast-in-Place Piles see Dwg. #42.

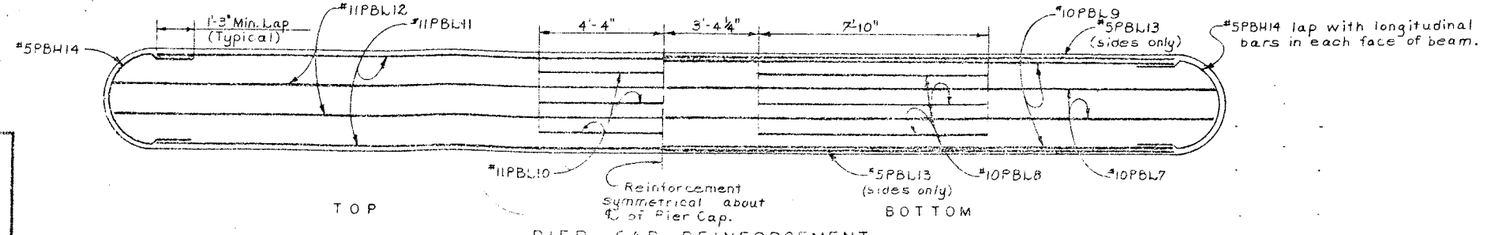

PIER CAP REINFORCEMENT

ELEVATIONS		
LOCATION	SOUTHBOUND	NORTHBOUND
A	403.20	403.00
B	406.70	406.50
C	427.85	427.83
D	431.85	431.83
E	428.35	428.48
F	432.35	432.48
G	433.42	433.55
H	433.31	433.35
I	433.15	433.13
J	432.92	432.91

BRIDGE NO. 2
INTERSTATE ROUTE 481 OVER DEWITT YARDS

PIER 10 (SB & NB)

PROJECT ENGINEER R. Parker
CHARGE OF F. Eckel
DESIGNED BY S. Rowe
DESIGN CHECKED BY N. A. Toppses
DETAILED BY J.C. Thompson
DETAIL CHECKED BY [illegible]

FED. RD. REG. NO.	STATE	FEDERAL AID PROJECT NO.	SHEET NO.	TOTAL SHEETS
1	NEW YORK	I-690-3(28) I-481-2(116)	193	309

INTERSTATE ROUTE CONNECTION 570
BUTTERNUT INTERCHANGE (PHASE 2)
ONONDAGA COUNTY

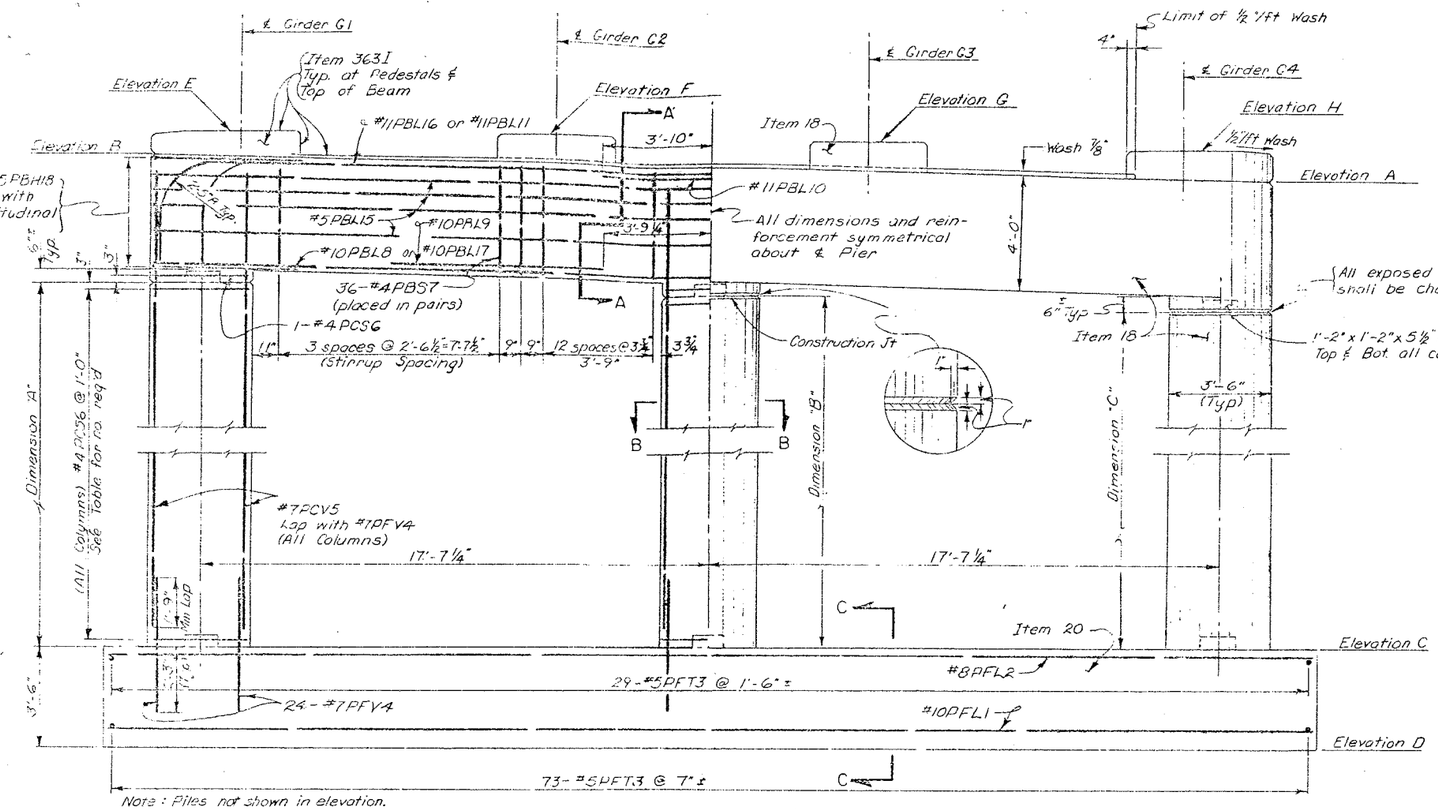

Note: Piles not shown in elevation.

ELEVATION
Scale: 3/16" = 1'-0"

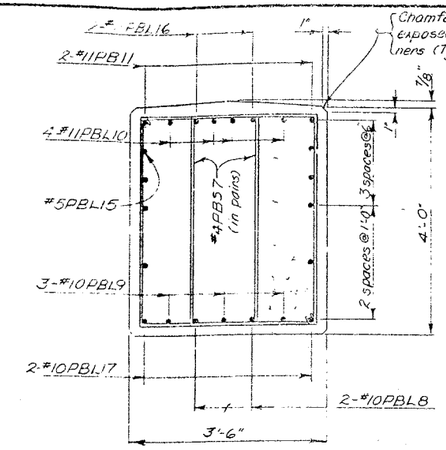

SECTION A-A
Scale: 3/4" = 1'-0"

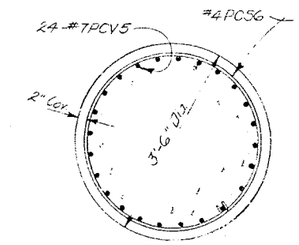

SECTION B-B
Scale: 3/4" = 1'-0"
Typical all columns

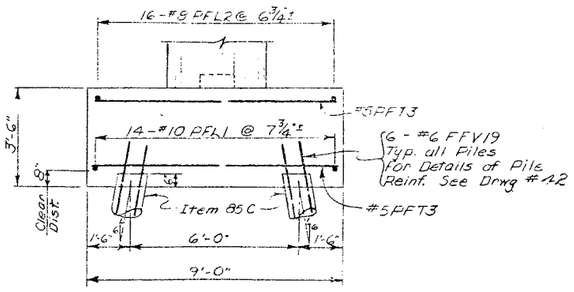

SECTION C-C
Scale: 3/8" = 1'-0"

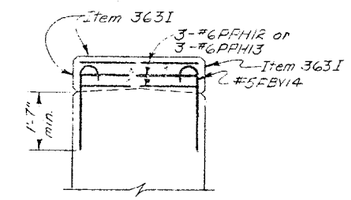

SECTION D-D
Scale: ½" = 1'-0"

Note: All footing reinforcement shall have a min. cover of 3" unless otherwise shown.
All other reinforcement shall have a min. cover of 2" unless otherwise shown.
Estimated length of Cast-In-Place Concrete Piles = 65' at Piers 11 & 12 NB & SB.
For design purposes the Pile Load does not exceed 35 Tons Per Pile.

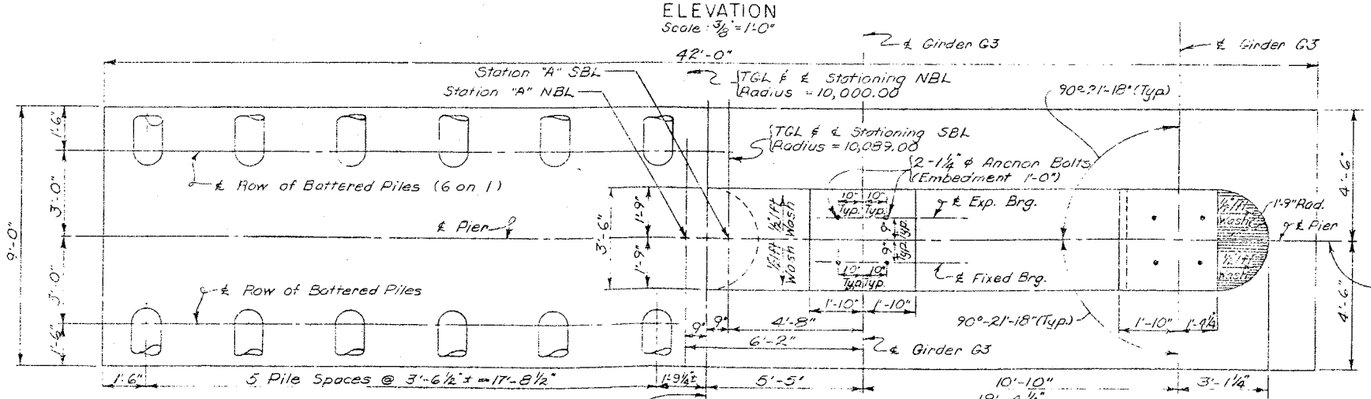

FOOTING PILE LAYOUT
Scale: 3/8" = 1'-0"

(All dimensions & reinforcement symmetrical about ℄ Pier

PLAN
Scale: 3/16" = 1'-0"

Pier 11 NB AZ 263°-28'-36"
Pier 12 NB AZ 263°-11'-13"
Pier 11 SB AZ 263°-14'-46"
Pier 12 SB AZ 263°-57'-22"

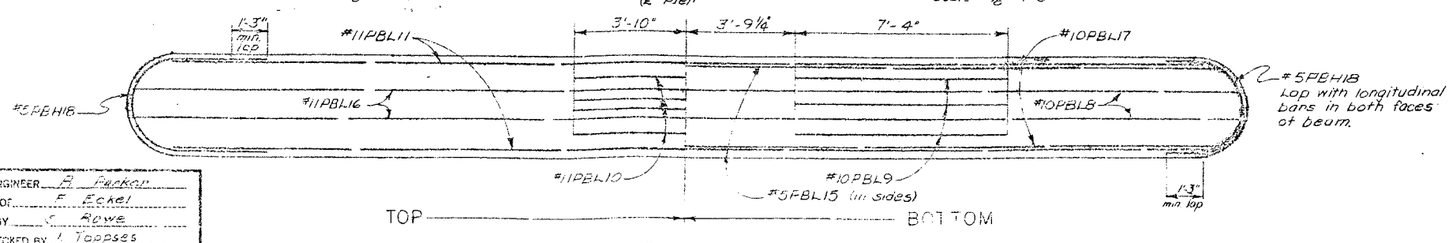

PIER CAP REINFORCEMENT
Scale: 3/8" = 1'-0"

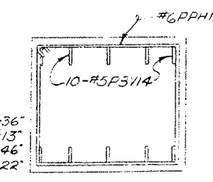

INTERIOR

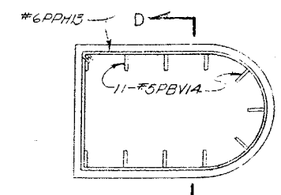

FASCIA

PEDESTALS
Scale: ½" = 1'-0"

PIER DATA

DESCRIPTION	NORTHBOUND		SOUTHBOUND	
	PIER 11	PIER 12	PIER 11	PIER 12
ELEVATION A	429.04	425.81	429.03	425.77
" B	429.72	426.49	429.71	426.44
" C	406.30	406.40	406.30	406.40
" D	402.80	402.90	402.80	402.90
" E	430.72	427.49	430.71	427.45
" F	430.49	427.26	430.48	427.22
" G	430.27	427.04	430.26	427.00
" H	430.04	426.81	430.03	426.77
DIM "A"	18.92	15.59	18.91	15.54
"B"	18.58	15.25	18.57	15.21
"C"	18.24	14.91	18.23	14.87
NO. HOOPS	19 Per Col.	16 Per Col.	19 Per Col.	16 Per Col.
STATION "A"	232+22.76	233+46.76	233+88.86	235+13.86

PROJECT ENGINEER R. Parker
CHARGE OF F. Eckel
DESIGNED BY K. Rowe
DESIGN CHECKED BY L. Toppses
DETAILED BY J. Duncant
DETAIL CHECKED BY [illegible]

BRIDGE NO. 2
INTERSTATE ROUTE 481 OVER DEWITT YARDS

PIERS 11 & 12 (N.B. & S.B.)

DRAWING NO. 15 OF 50

FED. RD. REG. NO.	STATE	FEDERAL AID PROJECT NO.	SHEET NO.	TOTAL SHEETS
1	NEW YORK	I-590-3(28) I-481-2(116)	194	309

INTERSTATE ROUTE CONNECTION 570
BUTTERNUT INTERCHANGE (PHASE 2)
ONONDAGA COUNTY

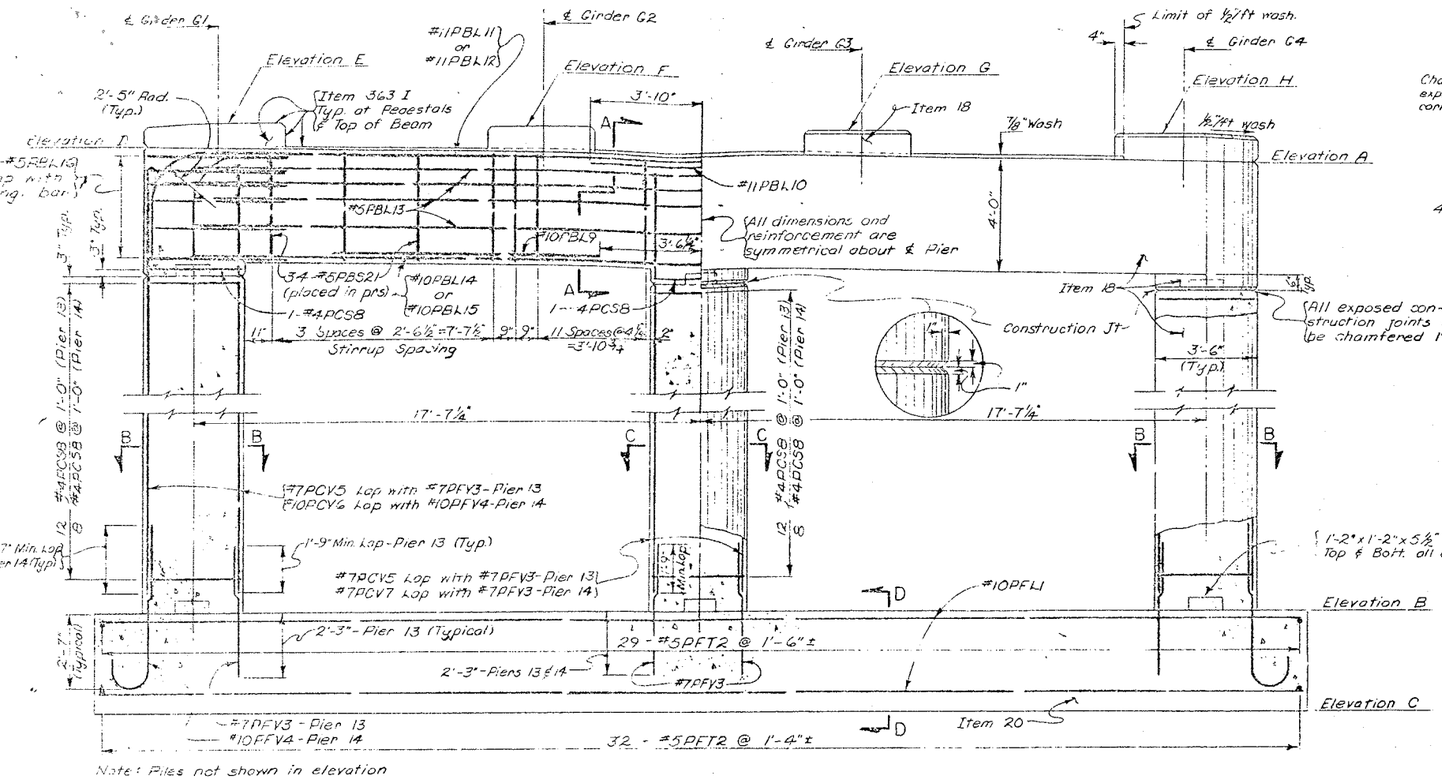

ELEVATION
Scale: 3/8" = 1'-0"

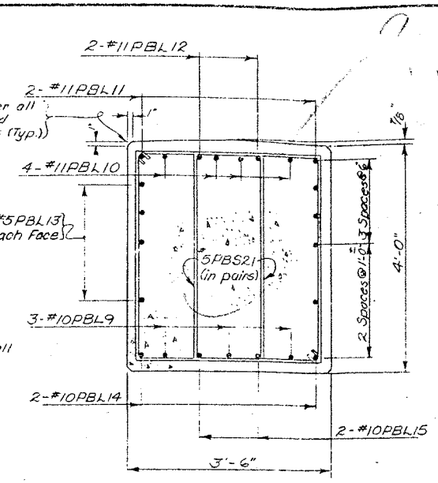

SECTION A-A
Scale: 3/4" = 1'-0"

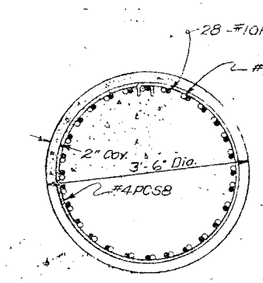

SECTION B-B, PIER 14
Scale: 3/4" = 1'-0"

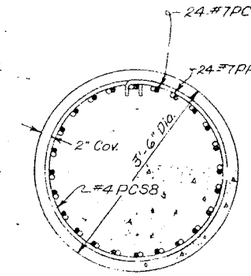

SECTION C-C, PIER 14
Scale: 3/4" = 1'-0"

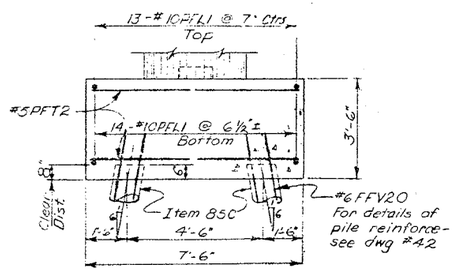

SECTION D-D
Scale: 3/8" = 1'-0"

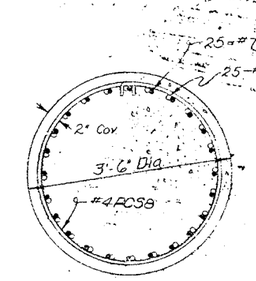

SECTION B-B & C-C, PIER 13
Scale: 3/4" = 1'-0"

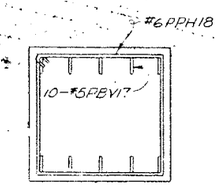

INTERIOR

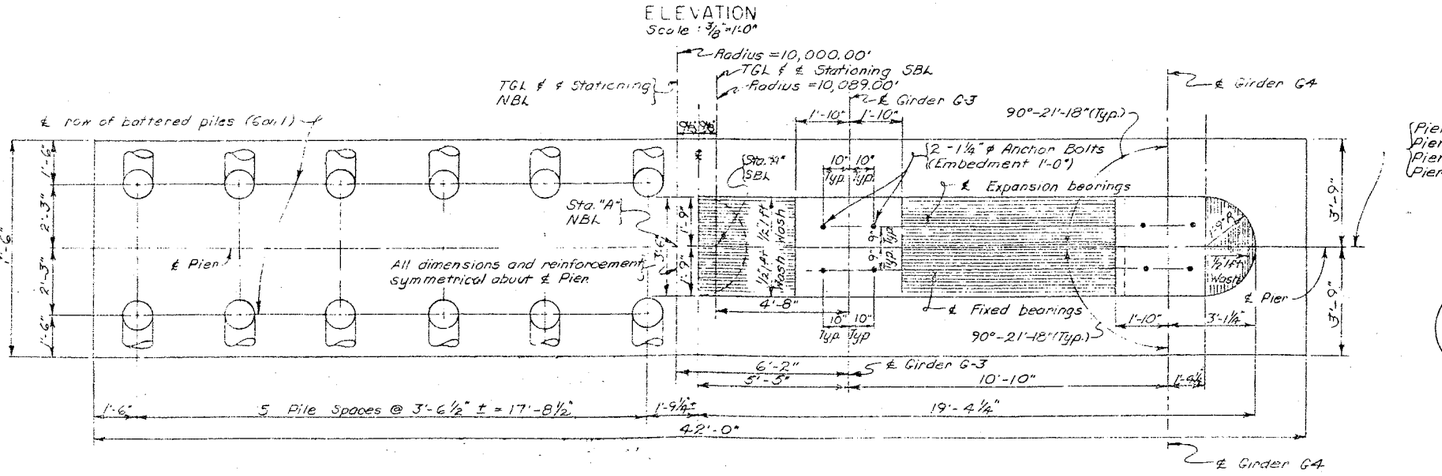

Pier 13 NB AZ 264°53'51"
Pier 14 NB AZ 265°36'29"
Pier 13 SB AZ 264°39'57"
Pier 14 SB AZ 265°22'33"

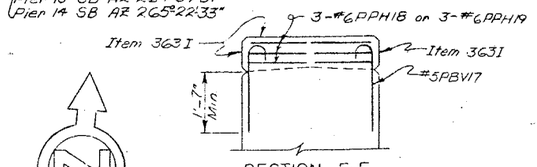

SECTION E-E
Scale: 1/2" = 1'-0"

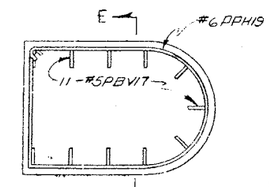

FASCIA PEDESTALS
Scale: 1/2" = 1'-0"

STATION "A"		
PIER	NBL	SBL
#13	234+70.76	236+38.86
#14	235+94.76	237+63.86

Note:
All footing reinforcement shall have a min. cover of 3" unless otherwise shown.
All other reinforcement shall have a min. cover of 2" unless otherwise shown.
Estimated length of Cast-in-Place Concrete Piles = 65' Pier 13 SB, 60' Pier 13 NB & 60' Piers 14 NB & SB

For design purposes the pile load does not exceed 35 tons per pile.

PIER DATA				
DESCRIPTION	NORTHBOUND		SOUTHBOUND	
	PIER 13	PIER 14	PIER 13	PIER 14
ELEVATION A	422.22	418.44	422.14	418.36
" B	406.70	407.00	406.70	407.00
" C	403.20	403.50	403.20	403.50
" D	422.90	419.12	422.81	419.03
" E	423.89	420.12	423.81	420.03
" F	423.67	419.90	423.59	419.81
" G	423.44	419.67	423.36	419.58
" H	423.22	419.44	423.14	419.36

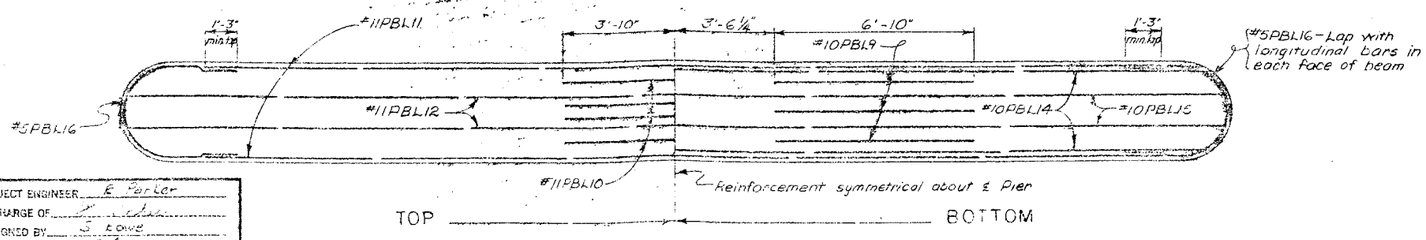

PIER CAP REINFORCEMENT
Scale: 3/8" = 1'-0"

PROJECT ENGINEER E. Porter
IN CHARGE OF
DESIGNED BY S. Lowe
DESIGN CHECKED BY
DETAILED BY
DETAIL CHECKED BY

BRIDGE NO. 2
INTERSTATE ROUTE 481 OVER DEWITT YARDS

PIERS #13 & #14 (NB & SB)

DRAWING NO. 16 OF 50

FED. RD. REG. NO.	STATE	FEDERAL AID PROJECT NO.	SHEET NO.	TOTAL SHEETS
1	NEW YORK	I-690-3(23) I-481-2(116)	195	309

INTERSTATE ROUTE CONNECTION 570
BUFFALO INTERCHANGE (PHASE 2)
ONONDAGA COUNTY

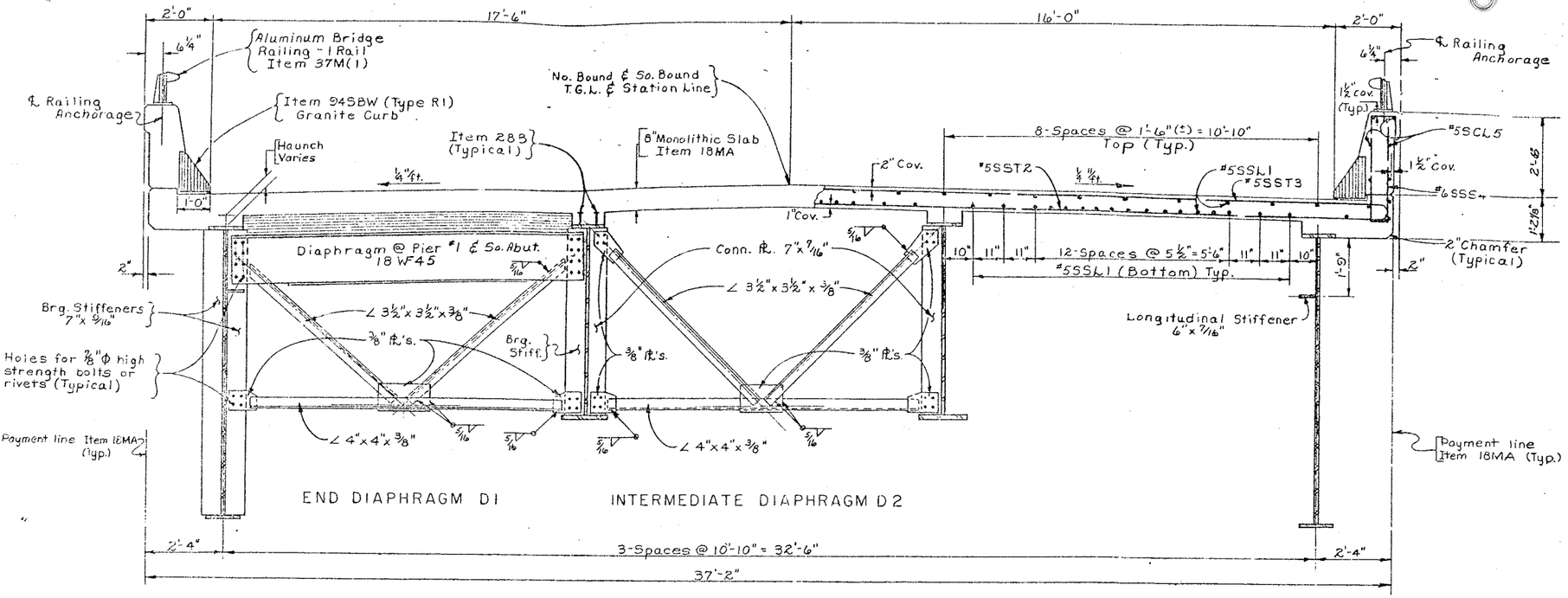

Note:

South Bound Lane looking up station.
North Bound Lane looking down station.

TRANSVERSE SECTION
Scale: ½" = 1'-0"

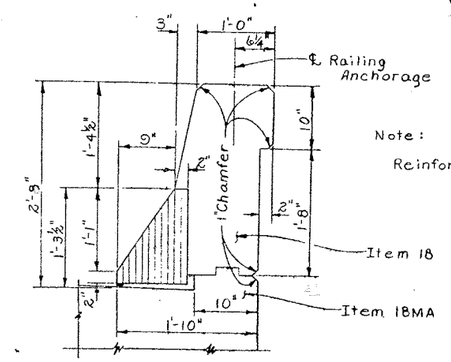

PARAPET DETAIL
Scale: 1" = 1'-0"

Note:

Reinforcement not shown.

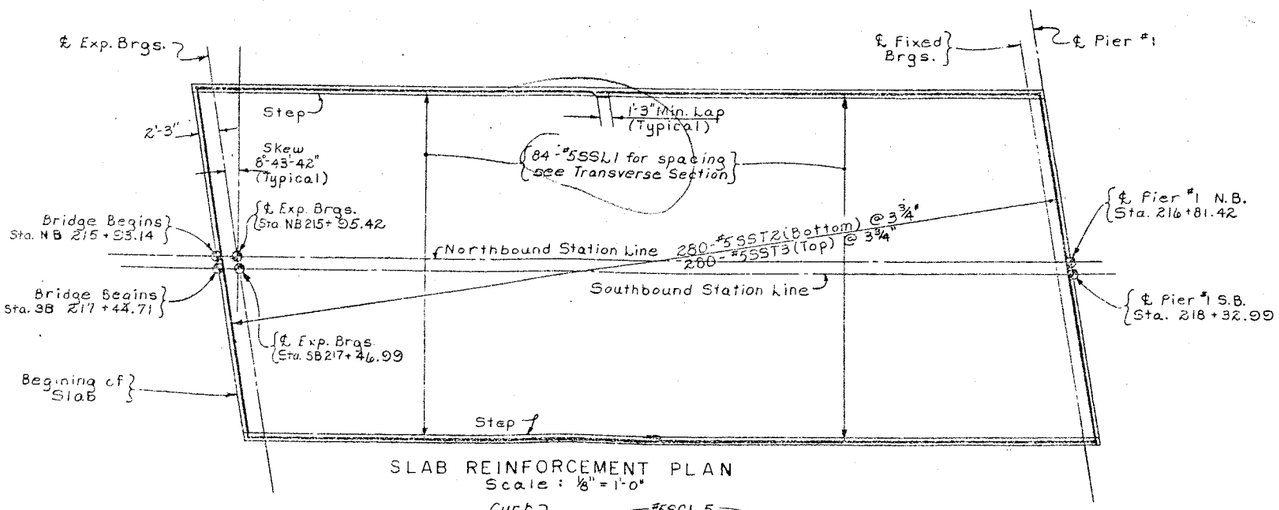

SLAB REINFORCEMENT PLAN
Scale: ⅛" = 1'-0"

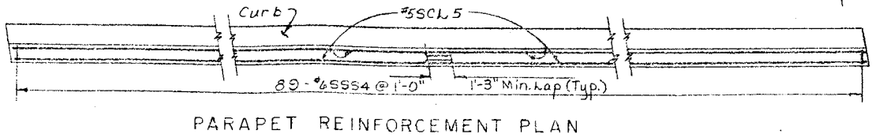

PARAPET REINFORCEMENT PLAN
Scale: ¼" = 1'-0"

Notes:

Holes for ⅞" ϕ rivets or high strength bolts may be omitted and welding substituted if contractor so elects. When the contractor elects to substitute the welded connection for the bolted connection shown, the amount of welding used shall be equivalent in strength to the bolts removed.

For details of Railing, Railing Anchorage and Granite Curbs see Dwg. # 35 & 36.

For Joint Details see Dwg. # 33.

PROJECT ENGINEER R. Parker
IN CHARGE OF F. Fekal
DESIGNED BY N. Toppses
DESIGN CHECKED BY R. Thimple
DETAILED BY J. C. Thompson
DETAIL CHECKED BY [illegible]

BRIDGE NO. 2
INTERSTATE ROUTE 481 OVER DEWITT YARDS

TRANSVERSE SECTION & SLAB PLAN
SPAN 1 N.B. & S.B.

DRAWING NO. 17 OF 50

FED. RD. REG. NO.	STATE	FEDERAL AID PROJECT NO.	SHEET NO.	TOTAL SHEETS
9	NEW YORK	I-690-8(28) I-481-2(16)	196	800

INTERSTATE ROUTE CONNECTION 570
SYRACUSE INTERCHANGE (PHASE 2)
ONONDAGA COUNTY

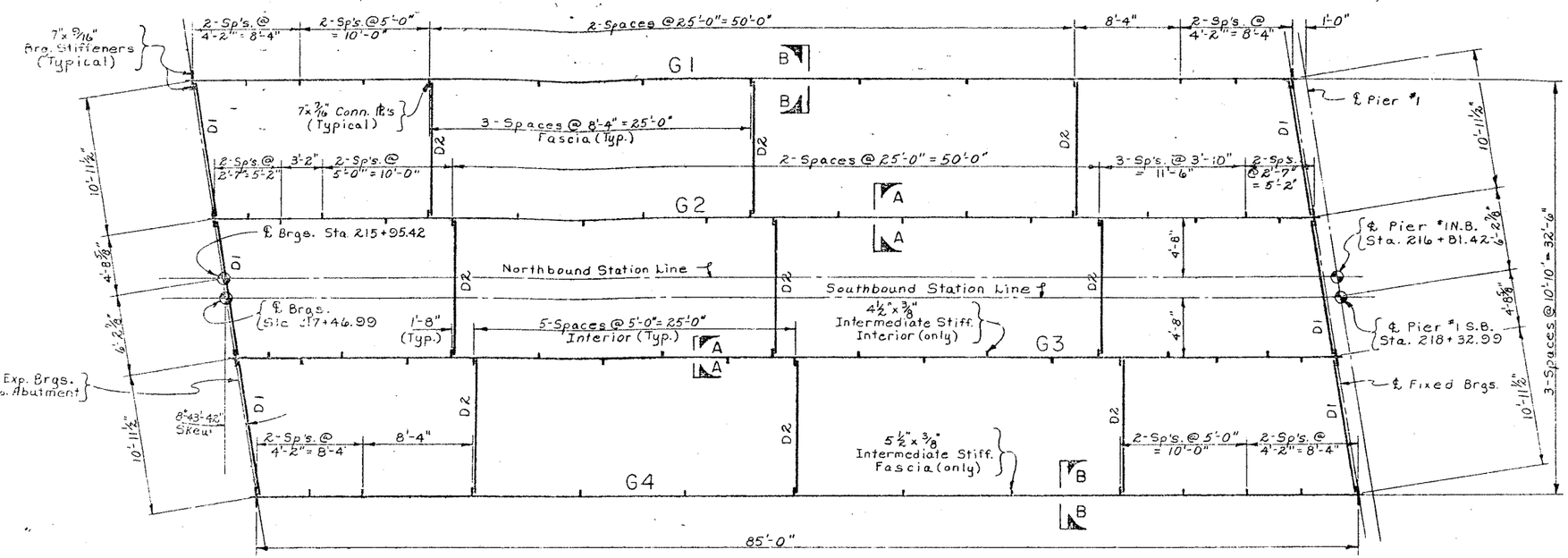

see Transverse Section for Diaphragms.

STEEL LAYOUT (S.B. & N.B.)
Scale : 3/16" = 1'-0"

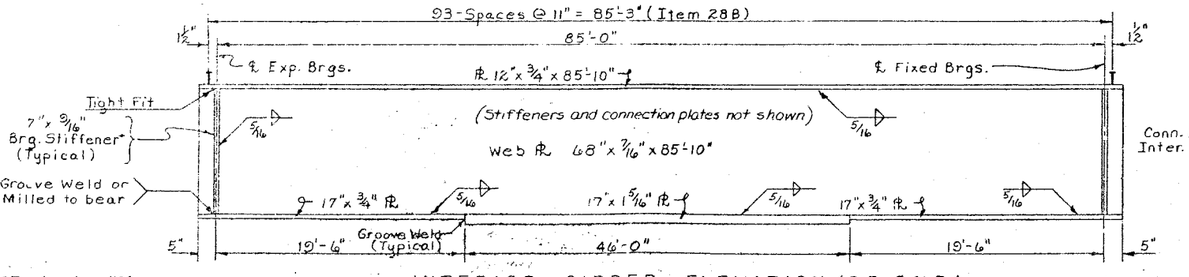

INTERIOR GIRDER ELEVATION (S.B. & N.B.)
Not to Scale

* Two bearing stiffeners required at each end of girder.

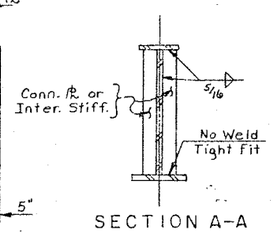

SECTION A-A
Not to Scale

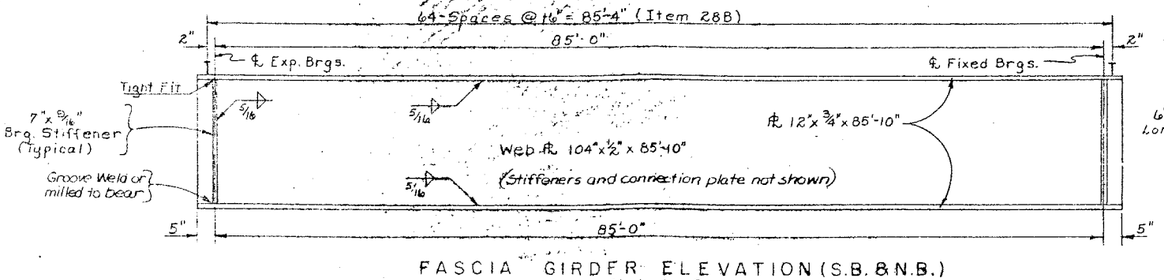

FASCIA GIRDER ELEVATION (S.B. & N.B.)
Not to Scale

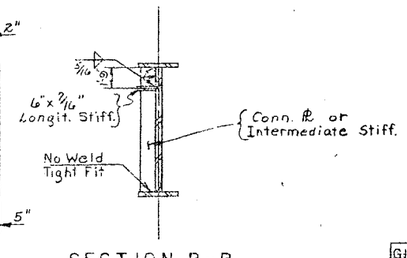

SECTION B-B
Not to Scale

Notes :

Web and flanges shall be ASTM designation A36 steel.

Stiffeners, Connection Plates, Diaphragm and Gusset Plates shall be ASTM designation A36 steel.

For Bearing Details see Drawing No's. 42 & 43.

Stud Shear Connectors shall be 6" high and placed in pairs. See Drawing No. 42 for additional details.

For Height of Haunch see Table of Haunch Heights Drawing No. 34.

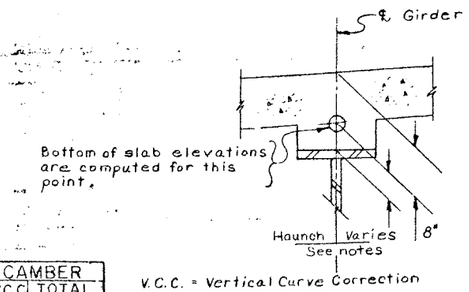

V.C.C. = Vertical Curve Correction

S.D.L. = Superimposed Dead Load, includes weight of railing.

		THEO. BOTTOM OF SLAB ELEVATIONS			DEFLECTIONS (FT.)				CAMBER		
									V.C.C.	TOTAL	
GIRDER	SPAN	℄ Exp. Brgs.	℄ Span	℄ Fix. Brgs.	STEEL	SLAB	SDL	TOTAL	(ft.)	(ft.)	(in.)
G1 N.B.	1	446.55	447.12	447.65	.01	.03	.01	.05	.02	.07	3/8
G2 N.B.	1	446.80	447.40	447.90	.02	.08	.02	.12	.02	.14	1 11/16
G3 N.B.	1	446.79	447.36	447.89	.02	.08	.02	.12	.02	.14	1 11/16
G4 N.B.	1	446.59	447.16	447.68	.01	.03	.01	.05	.08	.07	7/8
G1 S.B.	1	446.34	446.92	447.46	.01	.03	.01	.05	.02	.07	7/8
G2 S.B.	1	446.59	447.17	447.71	.02	.08	.02	.12	.02	.14	1 11/16
G3 S.B.	1	446.64	447.22	447.76	.02	.08	.02	.12	.02	.14	1 11/16
G4 S.B.	1	446.44	447.02	447.55	.01	.03	.01	.05	.02	.07	7/8

BRIDGE NO. 2
INTERSTATE ROUTE 481 OVER DEWITT YARDS

SPAN 1 (S.B. & N.B.)

PROJECT ENGINEER F. Parker
IN CHARGE OF F. Fekel
DESIGNED BY N. Toepsee
DESIGN CHECKED BY H. Tamule
DETAILED BY J. C. Thompson
DETAIL CHECKED BY [illegible]

DRAWING NO. 18 OF 50

FED. RD. REG. NO.	STATE	FEDERAL AID PROJECT NO.	SHEET NO.	TOTAL SHEETS
1	NEW YORK	~~F-000-3(029)~~ I-481-2(116)	197	309

INTERSTATE ROUTE CONNECTION 570
BUTTERNUT INTERCHANGE (PHASE 2)
ONONDAGA COUNTY

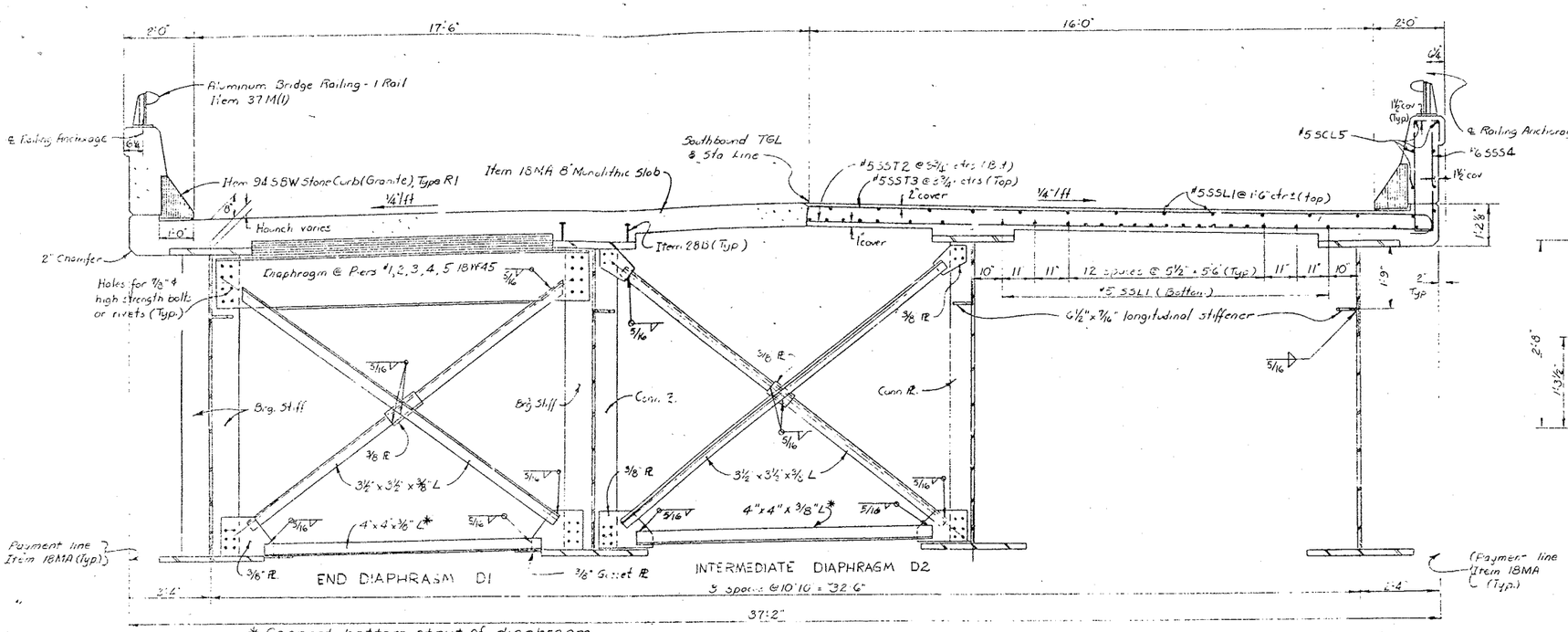

TRANSVERSE SECTION (SPANS 2,3,4,5 & 6)
Scale ½" = 1'-0"

* Connect bottom strut of diaphragm to horizontal gusset plate in bays where there are bottom laterals. Connect bottom strut of diaphragm to vertical gusset plates in bays where there are no bottom laterals.

Note: Southbound Lane looking up station shown. Northbound Lane looking down station similar

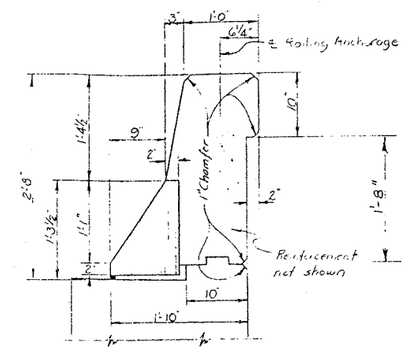

PARAPET DETAIL
Scale 1" = 1'-0"

Note: Holes for ⅞" ϕ high strength bolts or rivets may be omitted and welding substituted if the contractor so elects. When the contractor elects to substitute the welded connection for the bolted connection shown, the amount of welding used shall be equivalent in strength to the bolts omitted.

For parapet railing details see drawing no. 35 & 36

For granite curb details see drawing no. 35

Steel meeting the minimum requirements of A.S.T.M. Designations A36 shall be used for all intermediate stiffeners, longitudinal stiffeners, connection plates, bearing stiffeners, diaphragm, bracing, & thru lateral bracing (except gusset plates), trough support angles, finger joint support plates and open armored joint support plates at the south end of span 2.

Finger joint plates, vertical side plates, and deflector plates at finger joints, and armoring angles and side plates at open joint at south end of span 2 shall be corrosion resistant steel A.S.T.M. Designation A 242.

The webs of the girders shall be A.S.T.M. Designation A441.

See details of individual spans for type of steel to be used in girder flanges and bottom lateral gusset plates.

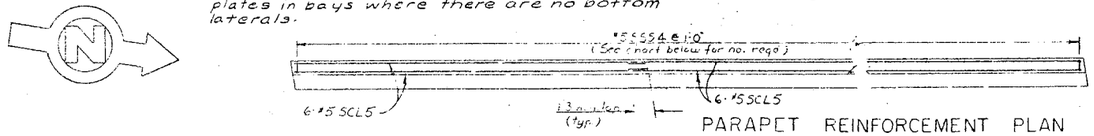

PARAPET REINFORCEMENT PLAN
No Scale

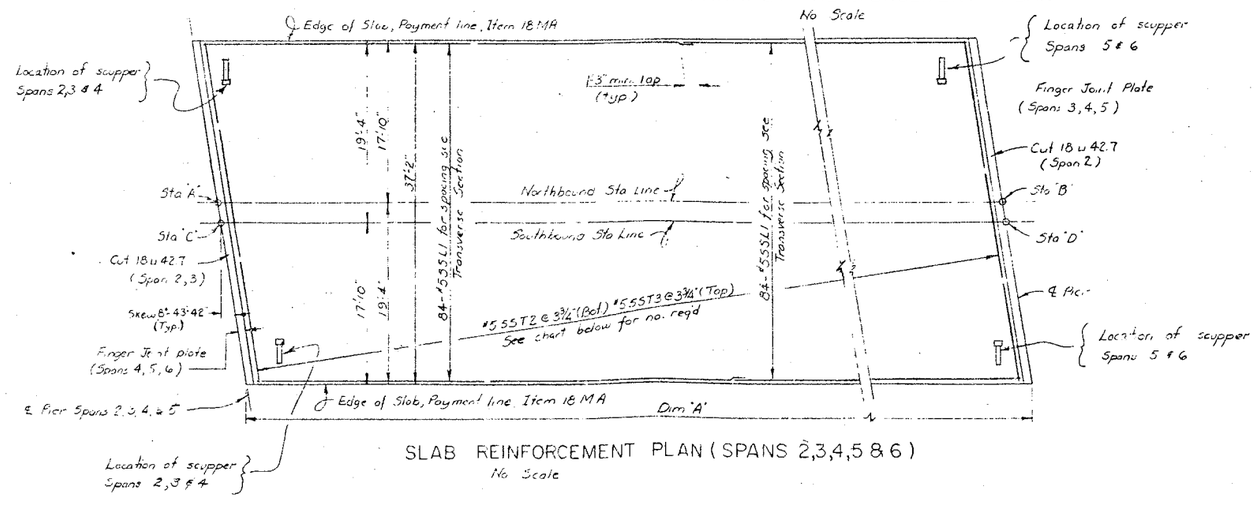

SLAB REINFORCEMENT PLAN (SPANS 2,3,4,5 & 6)
No Scale

SPAN	DIM "A"	STA. A	STA. B	STA. C	STA. D	SST2 & SST3 NO. REQ'D	SSS4 NO. REQ'D
2	150'-2" SB & NB	214+81.42	216+37.59	218+32.99	219+89.15	497	157
3	171'-2" SB & NB	218+37.59	220+06.76	219+89.15	221+60.32	544	172
4	198'-0" SB & NB	220+06.76	222+04.76	221+60.32	223+58.32	629	198
5	198'-0" SB & NB	222+06.76	224+04.76	223+58.32	225+56.32	629	198
6	198'-0" SB & NB	224+04.76	226+02.76	225+56.32	227+54.32	629	198

PROJECT ENGINEER E. Tarsser
IN CHARGE OF E. Tarsser
DESIGNED BY E. Tarsser
DESIGN CHECKED BY E. Tarsser
DETAILED BY C.H. Smith
DETAIL CHECKED BY [illegible]

BRIDGE NO. 2
INTERSTATE ROUTE 481 OVER DEWITT YARDS

TRANSVERSE SECTION & SLAB PLAN
SPANS 2,3,4,5 & 6 NB & SB

DRAWING NO. 19 OF 50

FED. RD. REG. NO.	STATE	FEDERAL AID PROJECT NO.	SHEET NO.	TOTAL SHEETS
1	NEW YORK	I-690-3(28) I-481-2(116)	198	300

INTERSTATE ROUTE CONNECTION 690
SUPERIORITY INTERCHANGE (PHASE 2)
ONONDAGA COUNTY

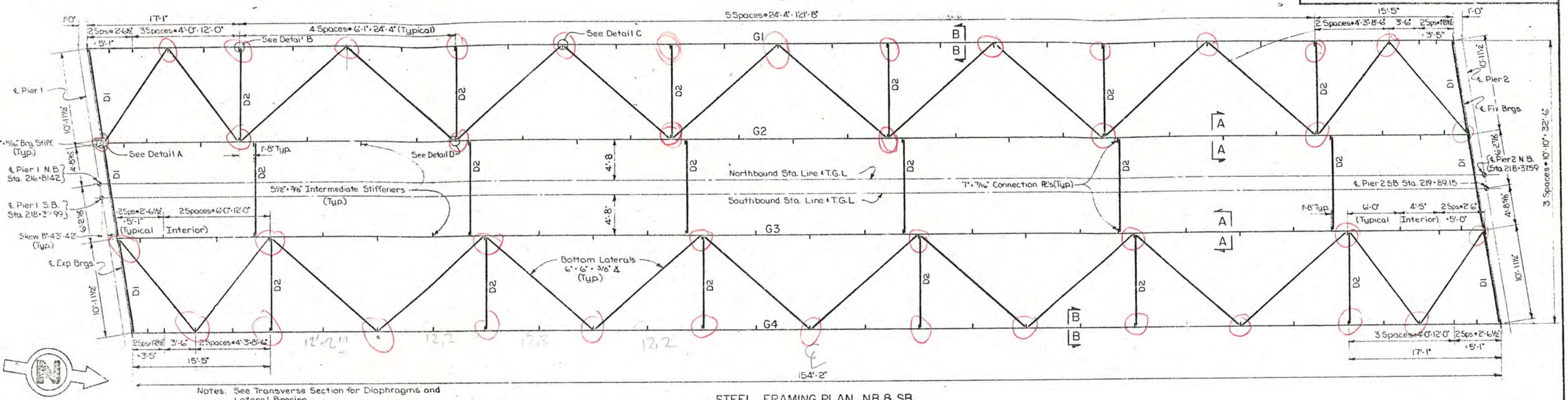

Notes: See Transverse Section for Diaphragms and Lateral Bracing.
See Drawing No. 22 for Cross Lateral Bracing Details A, B, C & D.

STEEL FRAMING PLAN NB & SB
Scale: 3/16" = 1'-0"

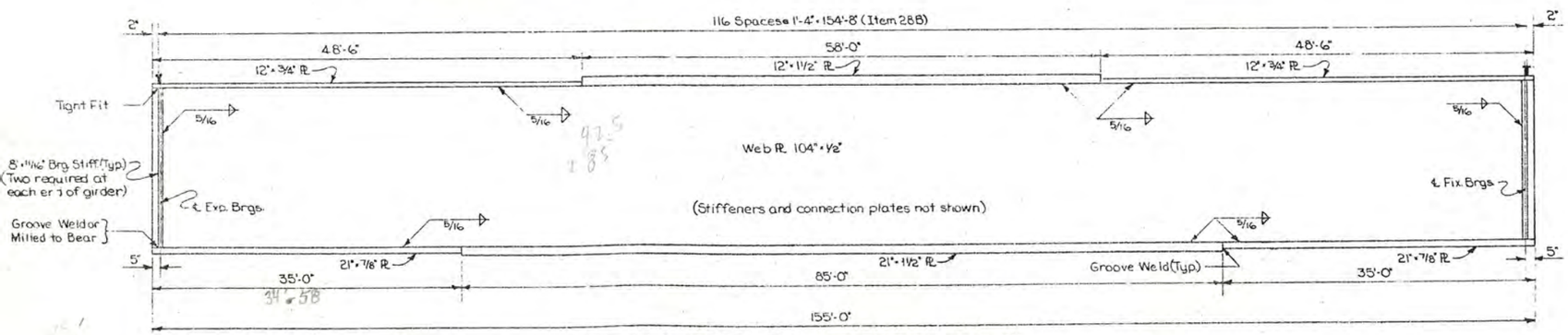

FASCIA & INTERIOR GIRDER ELEVATION NB & SB
Not to Scale

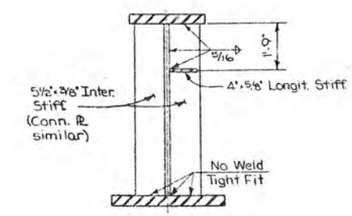

SECTION A-A
Not to Scale

Notes:
Web and flanges shall be A.S.T.M. designation A441 Steel.
Stiffeners, connection plates, diaphragms, lateral bracing and gusset plates shall be A.S.T.M. designation A36 Steel.
For details of bearings see Dwg. No. 42 & 43.
Stud Shear Connectors shall be 6" high.

GIRDER	SPAN	THEO. BOTTOM OF SLAB ELEVATIONS ℄ EXP BRGS.	℄ SPAN	℄ FIX. BRGS.	DEFLECTIONS (FT.) STEEL	SLAB	SDL.	TOT.	CAMBER V.C.C. (FT.)	TOTAL (FT.)	(IN.)
G1 NB	2	447.67	448.52	449.28	.08	.16	.07	.31	.07	.38	4 9/16
G2 NB	2	447.92	448.76	449.47	.08	.24	.07	.39	.07	.46	5 1/2
G3 NB	2	447.91	448.75	449.45	.08	.24	.07	.39	.07	.46	5 1/2
G4 NB	2	447.70	448.54	449.24	.08	.16	.07	.31	.07	.38	4 9/16
G1 SB	2	447.48	448.35	449.08	.08	.16	.07	.31	.07	.38	4 9/16
G2 SB	2	447.73	448.60	449.32	.08	.24	.07	.39	.07	.46	5 1/2
G3 SB	2	447.78	448.65	449.37	.08	.24	.07	.39	.07	.46	5 1/2
G4 SB	2	447.58	448.44	449.16	.08	.16	.07	.31	.07	.38	4 9/16

V.C.C. - Vertical Curve Correction
S.D.L. - Superimposed Dead Load, includes weight of railing.

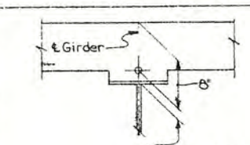

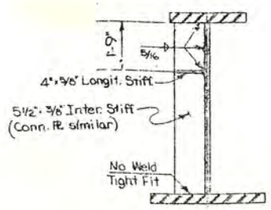

SECTION B-B
Not to Scale

BRIDGE NO. 2
INTERSTATE ROUTE 381 OVER DEWITT YARDS

SPAN 2 FRAMING PLAN

DRAWING NO. 20 OF 50

PROJECT ENGINEER R. L. Parker
IN CHARGE OF F. Eckel
DESIGNED BY N. P. Tsoses
DESIGN CHECKED BY R. Thimble
DETAILED BY J. F. Darcy
TRAIL. CHECKED BY [illegible]

FED. RD. REG. NO.	STATE	FEDERAL AID PROJECT NO.	SHEET NO.	TOTAL SHEETS
1	NEW YORK	I-690-3(28) I-481-2(116)	199	303

INTERSTATE ROUTE CONNECTION 570
BUTTERNUT INTERCHANGE (PHASE 2)
ONONDAGA COUNTY

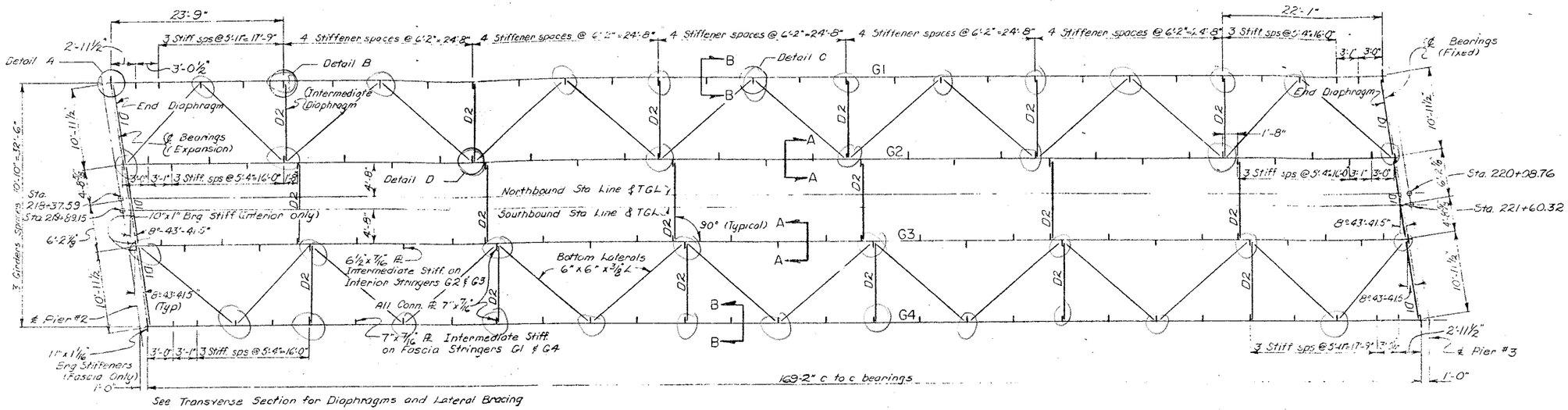

STEEL LAYOUT (SPAN #3 NB & SB)
Scale 1/8" = 1'-0"

Note: Stud Shear Connectors shall be 6" high.

For Bearings Details see Drawing # 42 and 43
For Joint Details see Drawing # 31
For Trough Details see Drawing # 39

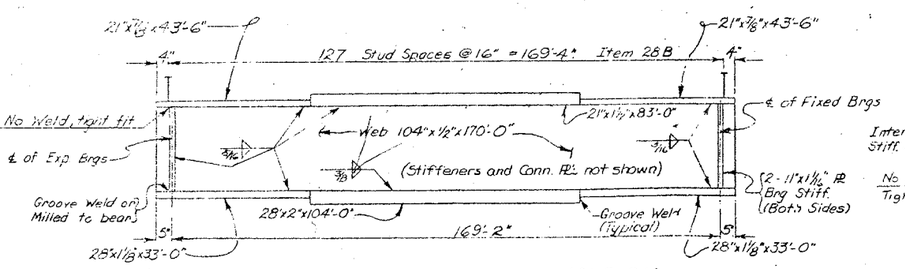

FASCIA GIRDER ELEVATION (G1 & G4)
Not to Scale

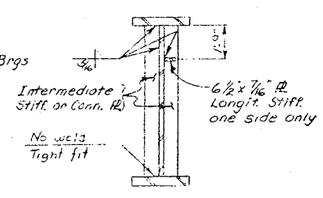

SECTION A-A
Not to Scale
Note: All Conn. Plates 7"x7/16"

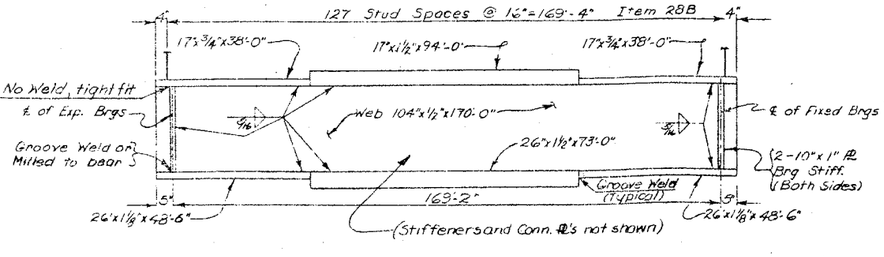

INTERIOR GIRDER ELEVATION (G2 & G3)
Not to Scale

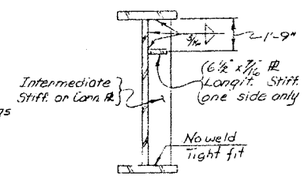

SECTION B-B
Not to Scale
Note: All Conn. Plates 7"x7/16"

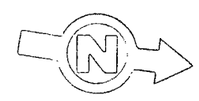

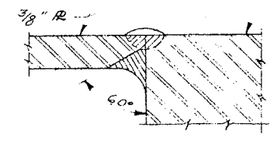

DETAIL #1

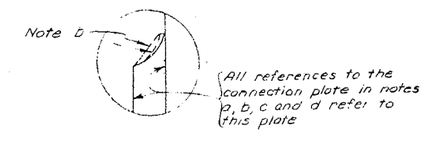

DETAIL #2

LATERAL BRACING DETAILS
Not to Scale

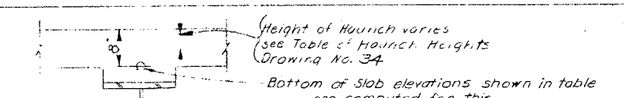

GIRDER	NORTHBOUND THEO. BOT. OF SLAB EL.			SOUTHBOUND THEO. BOT. OF SLAB EL.			DL DEFLECTION STEEL (FT.)	SLAB (FT.)	S.D.L. (FT.)	TOTAL (FT.)	CAMBER V.C.C. (FT.)	TOTAL (FT.)	(IN.)
SPAN 3	℄ SO. BRG	℄ SPAN	℄ NO. BRG	℄ SO. BRG	℄ SPAN	℄ NO. BRG							
G1	449.24	449.95	450.29	449.10	449.74	450.20	.11	.15	.11	.37	.08	.45	5 3/8
G2	449.48	450.09	450.52	449.34	449.97	450.44	.12	.29	.04	.45	.08	.53	6 3/8
G3	449.46	450.07	450.50	449.39	450.02	450.48	.12	.29	.04	.45	.08	.53	6 3/8
G4	449.25	449.85	450.28	449.18	449.80	450.26	.11	.15	.11	.37	.08	.45	5 3/8

S.D.L. = superimposed dead load, includes weight of parapet and railing.
V.C.C. = vertical curve correction

Note:

a. The connection plate shall be prepared and welded as a single bevel groove weld as shown in Detail #1. It shall then be Air Carbon-Arc gauged from the second side into sound weld metal and then welded as detailed. All welding shall be in the flat or "downhand" position.

b. The plate may be of any shape that will provide often welding, cutting, and finish grinding a smooth transition from the flange edge at a minimum radius of 12".

c. Both the connection plate and flange are to be the same type of steel.

d. Field welding to the connection plate will not be permitted.

The webs, flanges and gusset plates for bottom lateral bracing for the Span 3 girders shall be A.S.T.M. Designation A441 steel. Stiffeners, diaphragms, bearings, and bottom lateral bracing (except gusset plates) shall be A.S.T.M. A36 steel.

For additional details of bottom lateral bracing see drawing No. 22

PROJECT ENGINEER: A. PARKER
IN CHARGE OF: E.D. ECKEL
DESIGNED BY: S. PAINE
DESIGN CHECKED BY: K. JENSEN
DETAILED BY: Tyler Dunnell
DETAIL CHECKED BY: Carl Smith

BRIDGE NO. 2
INTERSTATE ROUTE 481 OVER DEWITT YARDS

SPAN 3

DRAWING NO. 21 OF 30

FED. RD. REG. NO.	STATE	FEDERAL AID PROJECT NO.	SHEET NO.	TOTAL SHEETS
1	NEW YORK	I-090-3(28) I-481-2(116)	200	909

INTERSTATE ROUTE CONNECTION 690
SOUTHEAST ONONDAGA (PHASE 2)
ONONDAGA COUNTY

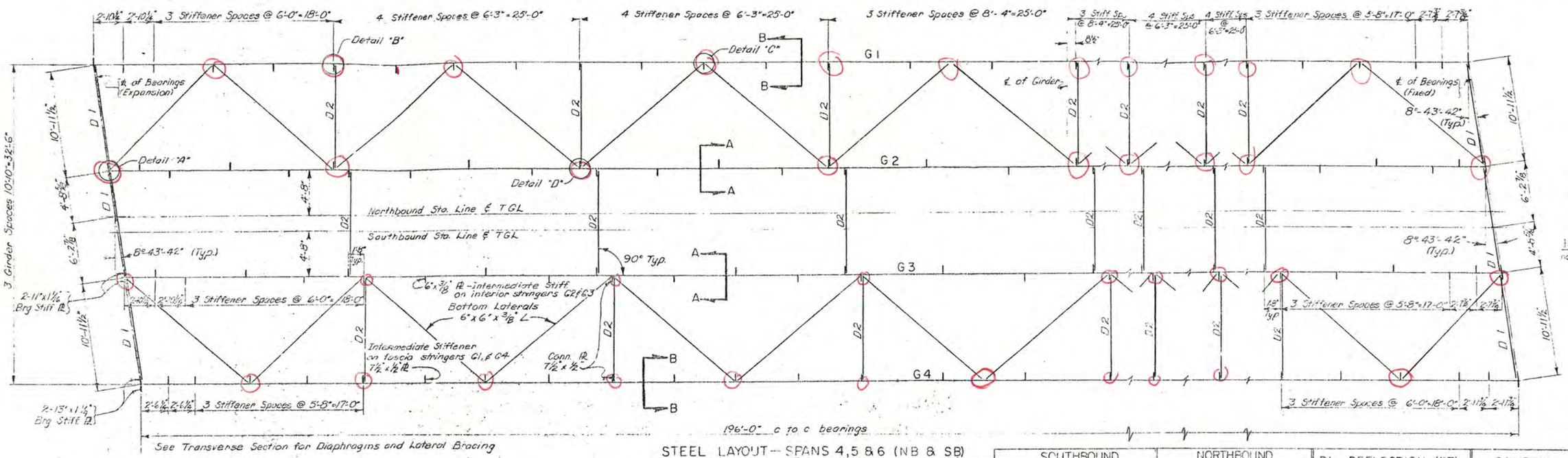

STEEL LAYOUT — SPANS 4, 5 & 6 (NB & SB)
Scale: 3/16" = 1'-0"

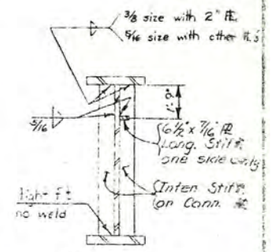

SECTION A-A
Not to Scale

All Connection PL's 7½" x ½"

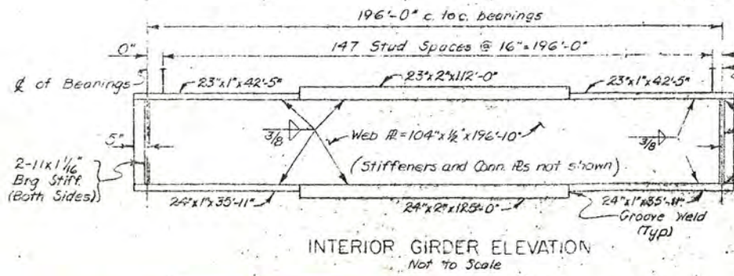

INTERIOR GIRDER ELEVATION
Not to Scale

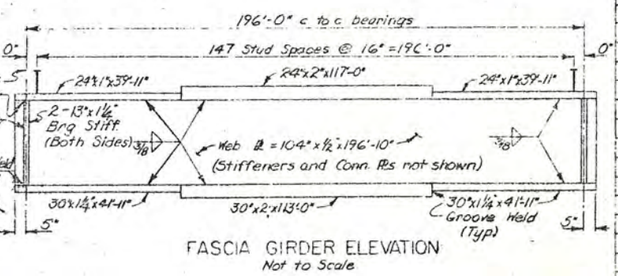

FASCIA GIRDER ELEVATION
Not to Scale

GIRDER	SOUTHBOUND THEO. BOT. OF SLAB EL.			NORTHBOUND THEO. BOT. OF SLAB EL.			DL DEFLECTION (FT)				CAMBER		
	℄ SO BRG	℄ SPAN	℄ NO BRG	℄ SO. BRG	℄ SPAN	℄ NO. BRG	STEEL	SLAB	SDL	TOTAL DL	VCC (FT)	TOTAL FEET	TOTAL INCHES
SPAN 4													
G1	450.21	450.54	450.63	450.30	450.59	450.66	0.172'	0.212'	0.168'	0.552'	0.113'	0.665'	8"
G2	450.45	450.77	450.86	450.53	450.82	450.89	0.178'	0.378'	0.062'	0.618'	0.113'	0.731'	8 13/16"
G3	450.48	450.80	450.89	450.51	450.80	450.55	0.178'	0.378'	0.062'	0.618'	0.113'	0.731'	8 13/16"
G4	450.27	450.58	450.67	450.29	450.57	450.63	0.172'	0.212'	0.168'	0.552'	0.113'	0.665'	8"
SPAN 5													
G1	450.63	450.50	450.14	450.66	450.50	450.10	0.172'	0.212'	0.168'	0.552'	0.113'	0.665'	8"
G2	450.86	450.72	450.36	450.89	450.72	450.32	0.178'	0.378'	0.062'	0.618'	0.113'	0.731'	8 13/16"
G3	450.89	450.75	450.39	450.85	450.68	450.28	0.178'	0.378'	0.062'	0.618'	0.113'	0.731'	8 13/16"
G4	450.66	450.52	450.15	450.63	450.45	450.05	0.172'	0.212'	0.168'	0.552'	0.113'	0.665'	8"
SPAN 6													
G1	450.13	449.54	448.72	450.09	449.47	448.62	0.172'	0.212'	0.168'	0.552'	0.113'	0.665'	8"
G2	450.35	449.75	448.93	450.31	449.68	448.83	0.178'	0.378'	0.062'	0.618'	0.113'	0.731'	8 13/16"
G3	450.37	449.77	448.94	450.27	449.64	448.78	0.178'	0.378'	0.062'	0.618'	0.113'	0.731'	8 13/16"
G4	450.19	449.53	448.70	450.04	449.40	448.54	0.172'	0.212'	0.168'	0.552'	0.113'	0.665'	8"

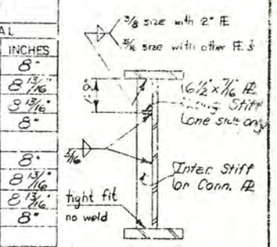

SECTION B-B
Not to Scale

SPANS 4, 5 & 6

1. The steel in the flanges and gusset plates for bottom lateral bracing shall be A.S.T.M. Designation A441 Modified.

2. The steel in the webs of the girders shall be A.S.T.M. Designation A441.

3. The steel in the stiffeners, diaphragms, bearings, and bottom lateral bracing (except gusset plates) shall be A.S.T.M. Designation A36.

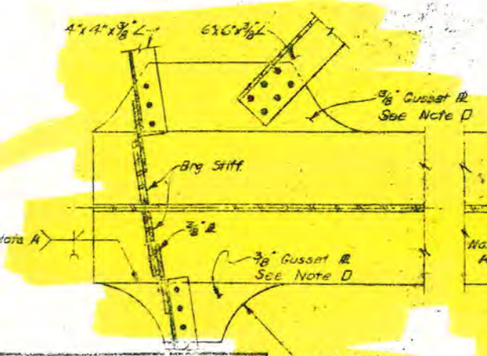

DETAIL "A"

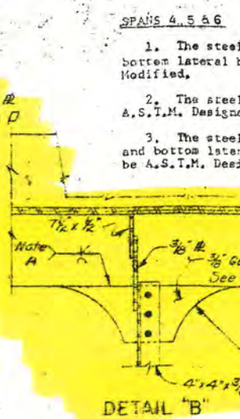

DETAIL "B"

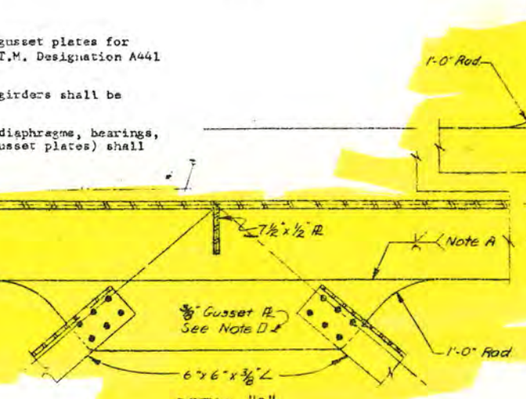

DETAIL "C"

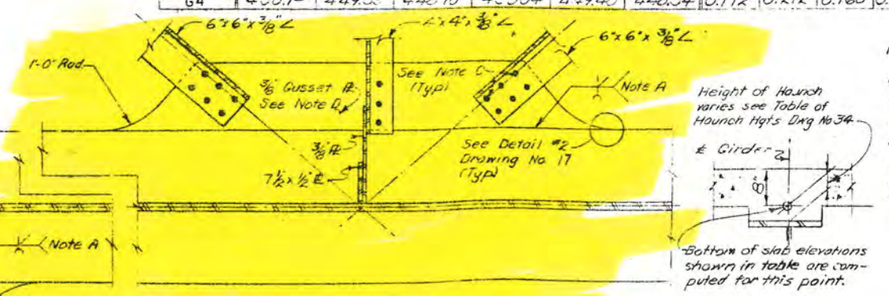

DETAIL "D"

Note:
A. The connection plate shall be prepared and welded as a single bevel groove weld as shown in Detail #1. It shall then be Air Carbon-Arc gouged from the second side into sound weld metal and then welded as detailed. All welding shall be in the flat or "downhand" position.
B. The plate may be of any shape that will provide after welding, cutting, and finish grinding a smooth transition from the flange edge of a minimum radius of 12".
C. Lateral bracing shall be attached to gusset plates with ⅞"ϕ high strength bolts. Field welding will not be permitted.
D. The gusset plate shall be the same type of steel as the flange to which it is welded.

Note:
Stud shear connectors shall be 6" high

For Bearing Details see Drawing #42 and #43
For Joint Details see Drawing #31
For Trough Details see Drawing #39

BRIDGE NO. 2
INTERSTATE ROUTE 481 OVER DEWITT YARDS

SPANS 4, 5 & 6

DRAWING NO. 22 OF 50

PROJECT ENGINEER E. FAGOS
IN CHARGE OF J. B. STERNMAN
DESIGNED BY S. POLVE
DESIGN CHECKED BY K. TANEVE
DETAILED BY [illegible]
CHECKED BY D.H. Smith

FED. RD. REG. NO.	STATE	FEDERAL AID PROJECT NO.	SHEET NO.	TOTAL SHEETS
1	NEW YORK	I-690-3(28) I-481-2(16)	201	309

INTERSTATE ROUTE CONNECTION 570
DEWITT INTERCHANGE (PHASE 2)
ONONDAGA COUNTY

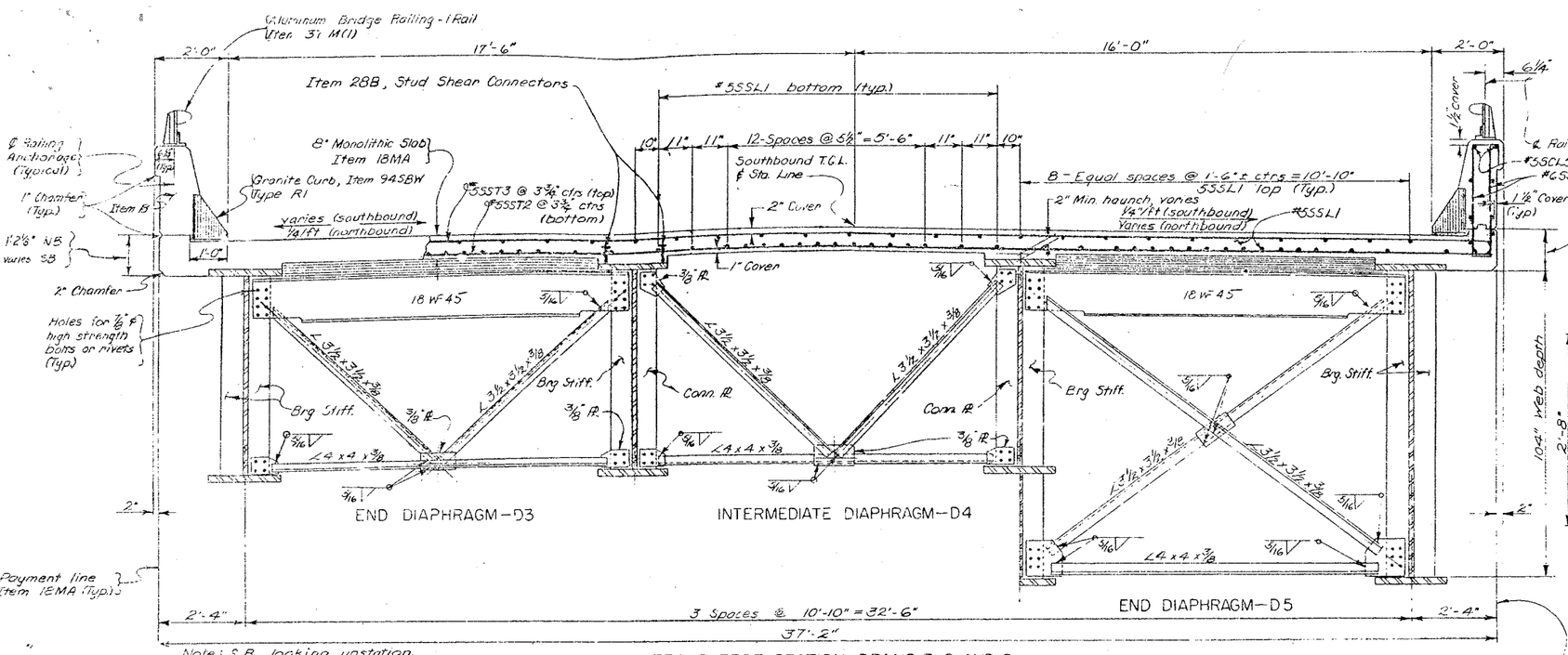

TRANSVERSE SECTION - SPANS 7, 8 AND 9
Scale: ½" = 1'-0"

Note: Holes for ⅞" ϕ high strength bolts or nivets may be omitted and welding substituted if the contractor so elects. When the contractor elects to substitute the welded connection for the bolted connection shown, the amount of welding used shall be equivalent in strength to the bolts omitted.

For detail of Railing see Drawing #36

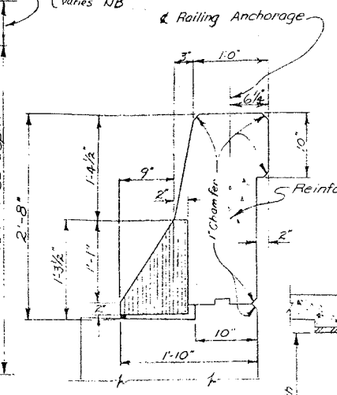

PARAPET DETAIL
Scale 1" = 1'-0"

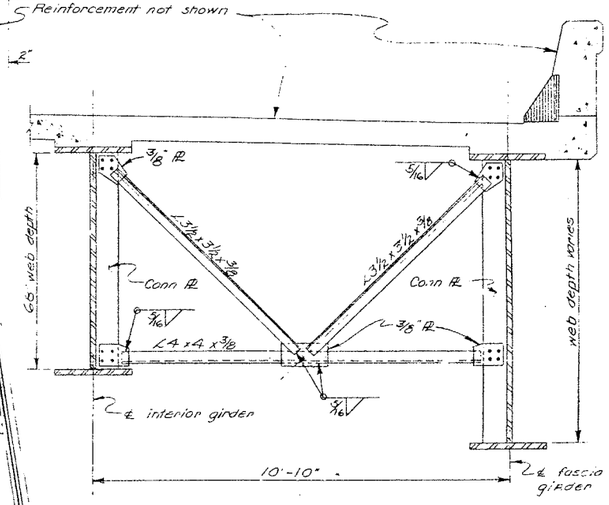

INTERMEDIATE DIAPHRAGM-D6
Scale: ½" = 1'-0"

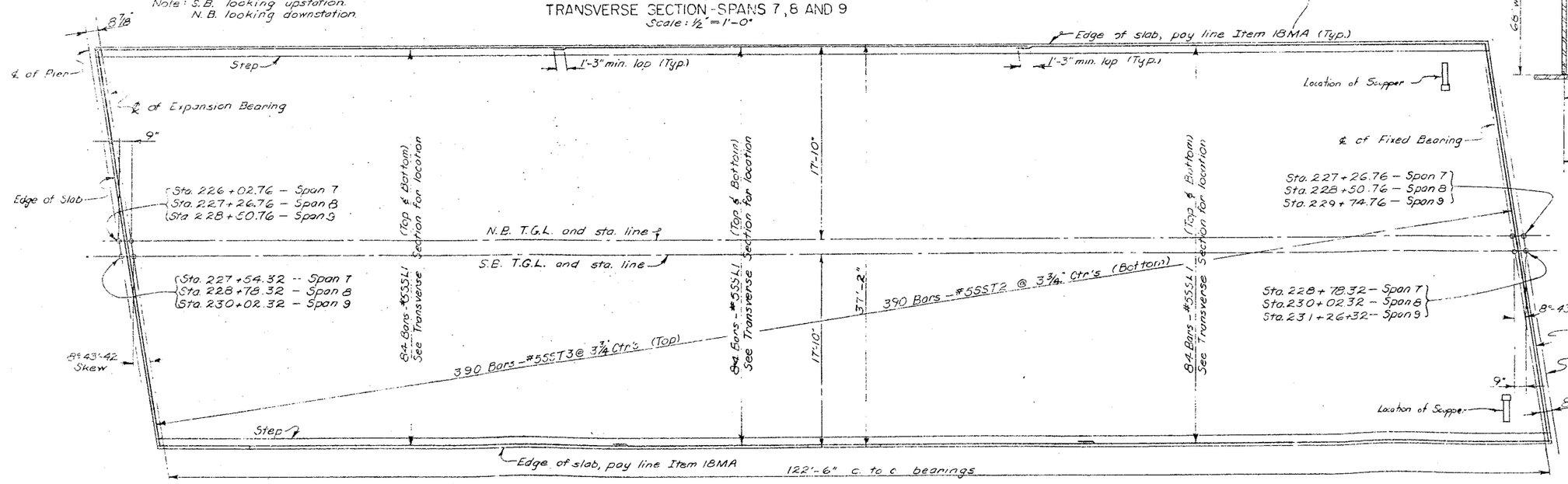

SLAB REINFORCEMENT PLAN, SPANS 7, 8 AND 9
Scale: 3/16" = 1'-0"

Note
Transverse reinforcement shall be placed parallel to skew.

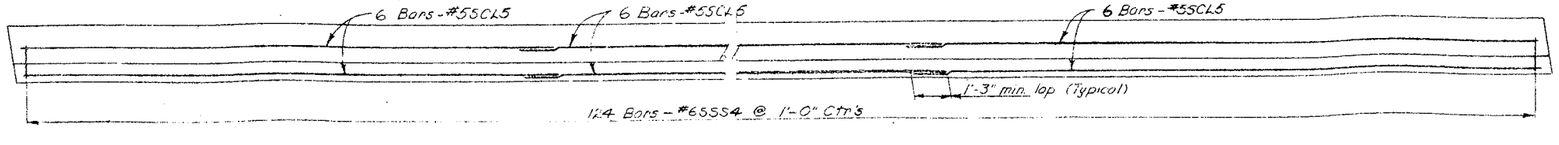

PARAPET REINFORCEMENT PLAN
Not to Scale

PROJECT ENGINEER F. Farmer
IN CHARGE OF J. B. Sherman
DESIGNED BY C. Lewis
DRAWN CHECKED BY L. Terrell
DETAILED BY J. Navarro
DETAIL CHECKED BY [illegible]

BRIDGE NO. 2
INTERSTATE ROUTE 481 OVER DEWITT YARDS

SPANS 7, 8 & 9

DRAWING NO. 23 OF 50

FED. RD. REG. NO.	STATE	FEDERAL AID PROJECT NO.	SHEET NO.	TOTAL SHEETS
1	NEW YORK	I-880-3(28) I-481-2(116)	202	309

INTERSTATE ROUTE CONSTRUCTION 370
INTERCHANGE (PIERS 2)
ONONDAGA COUNTY

TABLE OF STATIONS				
SPAN	STA. A	STA. B	STA. C	STA. D
7	226+02.76	227+54.32	227+26.76	228+78.32
8	227+26.76	228.78.32	228+50.76	230+02.32
9	228+50.76	230.02.32	229+74.76	231+26.32

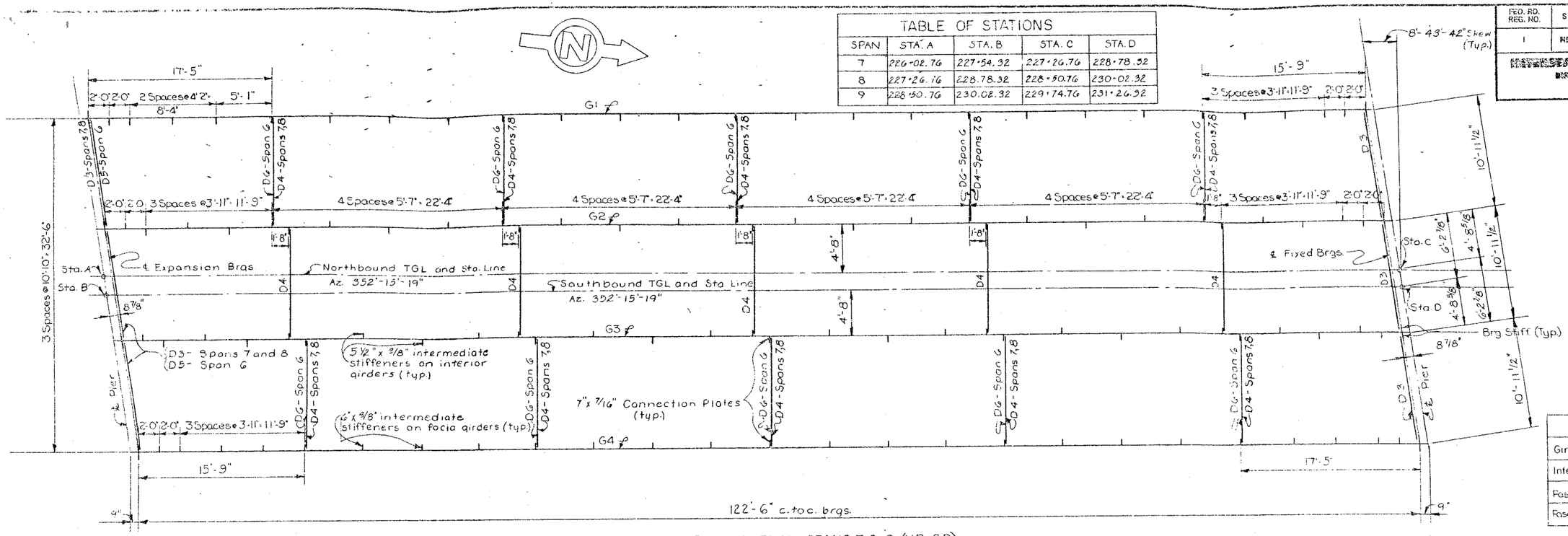

STEEL FRAMING PLAN SPANS 7, 8 & 9 (NB & SB)
Scale: 3/16" = 1'-0"

BEARING STIFFENER SIZES	
Girder	Size of each plate (2 plates @ each end of girder)
Interior spans 7,8 & 9	8" x 3/4"
Fascia span 7	8" x 3/4"
Fascia spans 8 & 9	9" x 7/8"

Steel in the girder webs and flanges shall be A.S.T.M. Designation A441 steel.
Steel in the stiffeners and diaphragms shall be A.S.T.M. Designation A36 steel.

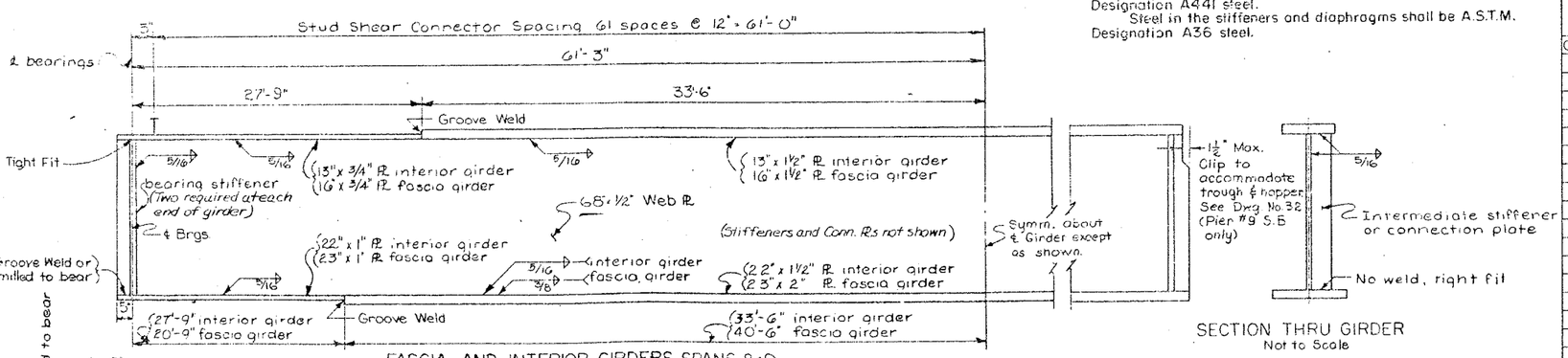

FASCIA AND INTERIOR GIRDERS SPANS 8 & 9
INTERIOR GIRDERS--SPAN 7
Not to Scale

SECTION THRU GIRDER
Not to Scale

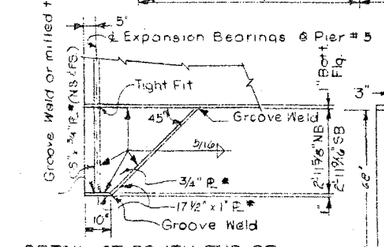

DETAIL AT SOUTH END OF INTERIOR STRINGERS--SPAN 7
Scale 3/8" = 1'-0"
* A441 Steel

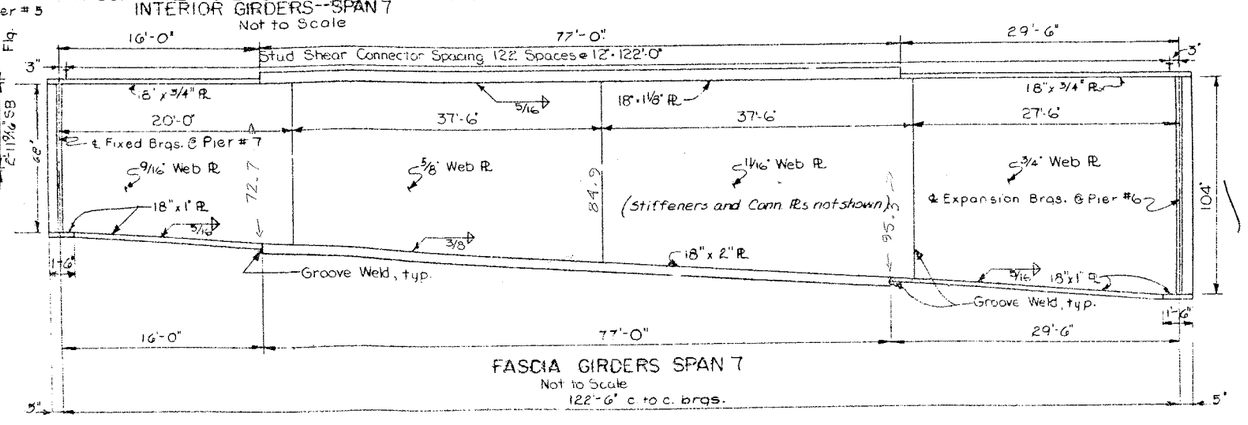

FASCIA GIRDERS SPAN 7
Not to Scale
122'-6" c. to c. brgs.

BOTTOM OF SLAB ELEVATIONS									
NORTHBOUND					SOUTHBOUND				
GIRDER	SPAN	℄ EXP BRGS	℄ SPAN	℄ FIX BRGS	GIRDER	SPAN	℄ EXP BRGS	℄ SPAN	℄ FIX BRGS
G1	7	448.60	447.95	447.22	G1	7	448.70	448.07	447.35
G2	7	448.61	448.16	447.42	G2	7	448.91	448.28	447.56
G3	7	448.77	448.11	447.37	G3	7	448.93	448.29	447.57
G4	7	448.52	447.87	447.12	G4	7	448.68	448.05	447.32
G1	8	447.20	446.37	445.45	G1	8	447.33	446.52	445.63
G2	8	447.40	446.57	445.65	G2	8	447.54	446.73	445.83
G3	8	447.35	446.52	445.59	G3	8	447.55	446.73	445.83
G4	8	447.10	446.27	445.34	G4	8	447.30	446.48	445.58
G1	9	445.43	444.42	443.83	G1	9	445.60	444.61	443.87
G2	9	445.63	444.62	443.38	G2	9	445.80	444.81	443.74
G3	9	445.57	444.56	443.46	G3	9	445.81	444.81	443.73
G4	9	445.32	444.30	443.20	G4	9	445.56	444.56	443.48

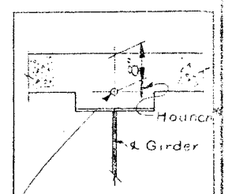

Bottom of Slab Elevations shown in table are computed for this point.

*Height of Hounch varies See Table of Hounch Heights on Drawing No. 34

	GIRDER	SPAN	DEFLECTIONS STEEL (FT.)	SLAB (FT.)	SDL. (FT.)	TOTAL (FT.)	CAMBER VCC (FT.)	TOTAL (FT.)	(IN.)
NB AND SB	G1	7	.05	.09	.06	.20	.04	.24	2 7/8
	G2	7	.08	.24	.03	.35	.04	.31	4 5/8
	G3	7	.08	.24	.03	.35	.04	.39	4 5/8
	G4	7	.05	.09	.06	.20	.04	.24	2 7/8
	G1	8	.07	.12	.08	.27	.04	.31	3 3/4
	G2	8	.08	.24	.03	.35	.04	.39	4 5/8
	G3	8	.08	.24	.03	.35	.04	.39	4 5/8
	G4	8	.07	.12	.08	.27	.04	.31	3 3/4
SB	G1	9	.07	.12	.08	.27	.02	.29	3 1/2
	G2	9	.08	.24	.03	.35	.03	.38	4 1/2
	G3	9	.08	.24	.03	.35	.04	.39	4 5/8
	G4	9	.07	.12	.08	.27	.04	.31	3 3/4
NB	G1	9	.07	.12	.08	.27	-.06	.21	2 1/2
	G2	9	.08	.24	.03	.35	.01	.36	4 3/8
	G3	9	.08	.24	.03	.35	.04	.39	4 5/8
	G4	9	.07	.12	.08	.27	.04	.31	3 3/4

V.C.C. = Vertical Curve Camber
S.D.L. = Superimposed dead load, includes the weight of sidewalk & railing.

BRIDGE NO. 2
INTERSTATE ROUTE 481 OVER DEWITT YARDS

SPANS 7, 8 & 9 (NB & SB)

2939

DRAWING NO. 24 OF 50

PROJECT ENGINEER R. L. Parker
IN CHARGE OF J. B. Sherman
DESIGNED BY [illegible]
DESIGN CHECKED BY [illegible]
DETAILED BY J. F. Dorsey & N. L. Gallner
DETAIL CHECKED BY [illegible]

FED. RD. REG. NO.	STATE	FEDERAL AID PROJECT NO.	SHEET NO.	TOTAL SHEETS
1	NEW YORK	I-690-3(28) I-481-2(116)	203	309

INTERSTATE ROUTE CONNECTION 570
BUTTERNUT INTERCHANGE (PHASE 2)
ONONDAGA COUNTY

Notes: Holes for 7/8" ϕ rivets or high strength bolts may be omitted and welding substituted if the Contractor so elects. When the Contractor elects to substitute the welded connection for the bolted connection shown, the amount of welding used shall be equivalent in strength to the bolts removed.
For details of railing see Dwg No. 36.

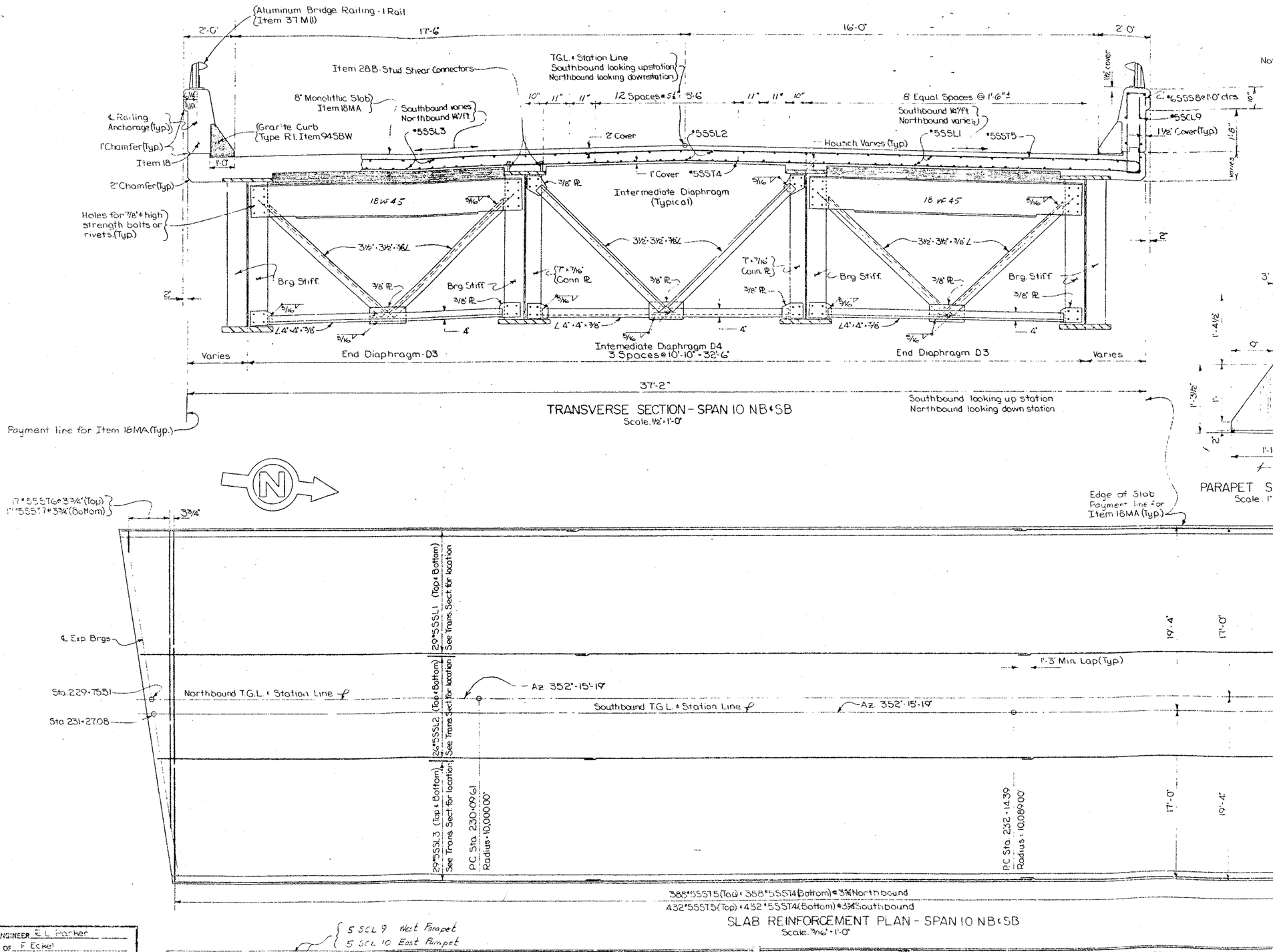

TRANSVERSE SECTION - SPAN 10 NB & SB
Scale: ½" = 1'-0"

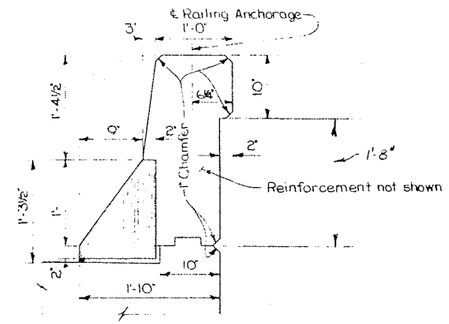

PARAPET SECTION
Scale: 1" = 1'-0"

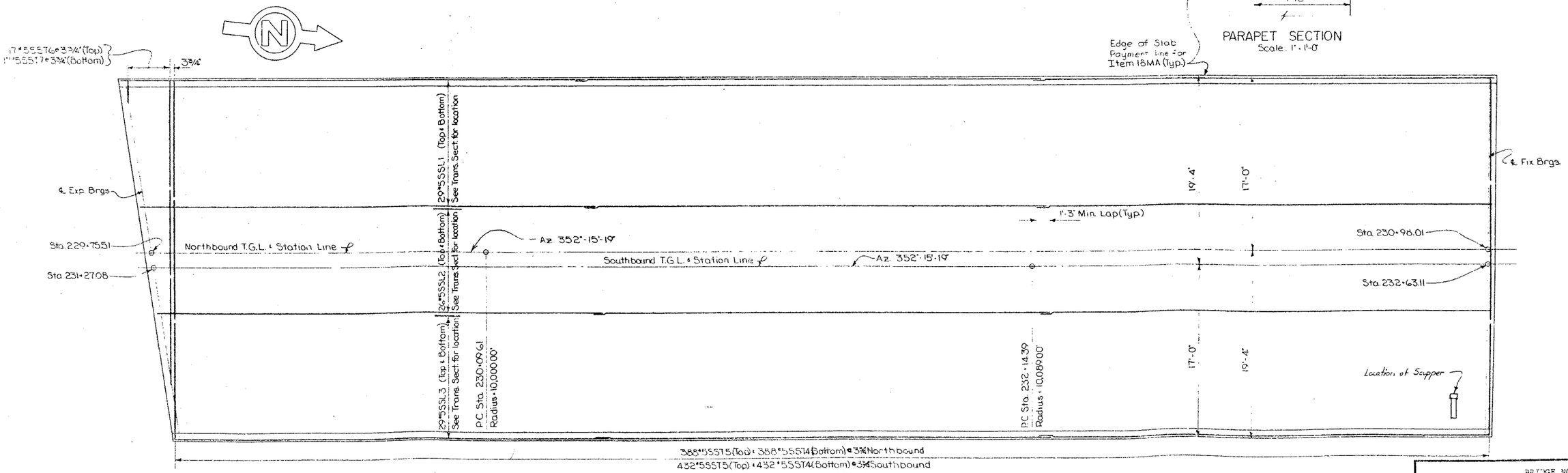

SLAB REINFORCEMENT PLAN - SPAN 10 NB & SB
Scale: 3/16" = 1'-0"

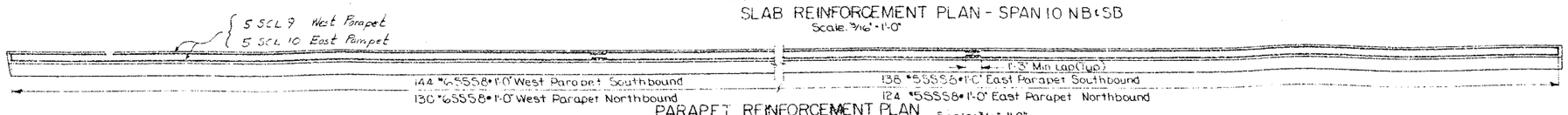

PARAPET REINFORCEMENT PLAN
Scale: 3/16" = 1'-0"

PROJECT ENGINEER E. L. Parker
IN CHARGE OF F. Eckel
DESIGNED BY E. Parker
DESIGN CHECKED BY N. Tsoposes
DETAILED BY J. F. Darcy
DETAIL CHECKED BY J. Gilbert

BRIDGE NO. 2
INTERSTATE ROUTE 481 OVER DEWITT YARDS

SPAN 10 NB & SB

DRAWING NO. 25 OF 31

FED. RD. REG. NO.	STATE	FEDERAL AID PROJECT NO.	SHEET NO.	TOTAL SHEETS
1	NEW YORK	I-690-3(28) I-481-2(16)	264	509

INTERSTATE ROUTE CONNECTION 690
BUTTERMILK CREEK BRIDGE (BRIDGE 2)
ONONDAGA COUNTY

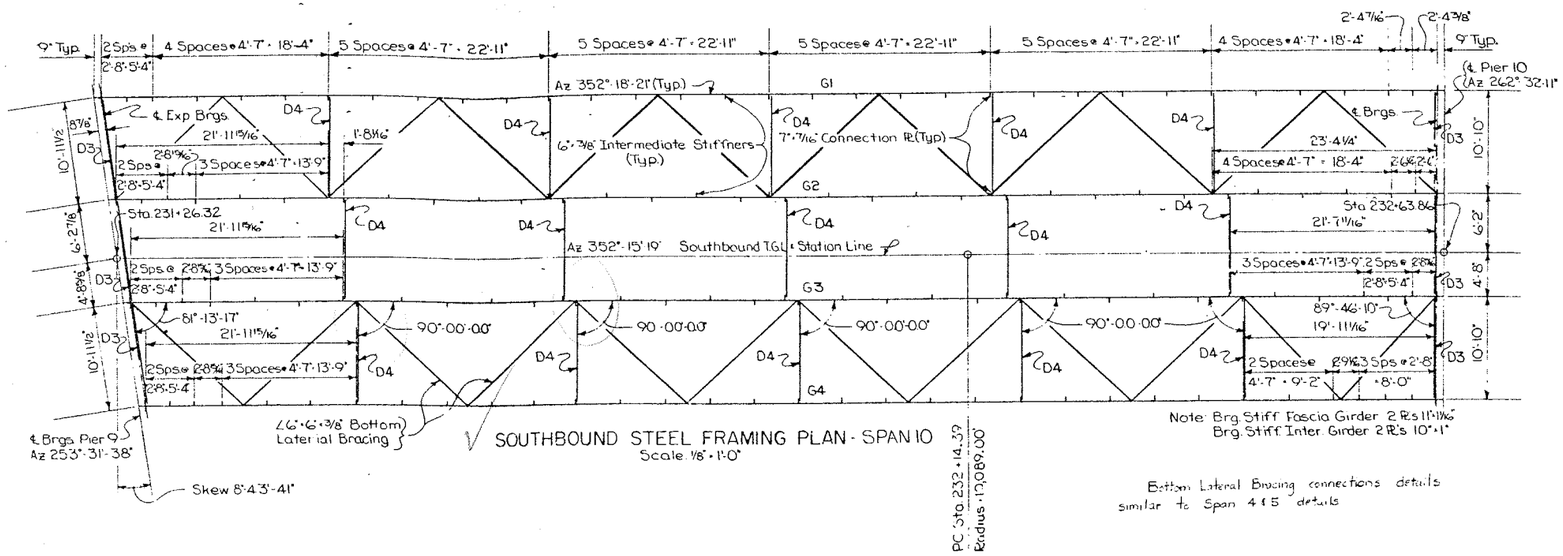

SOUTHBOUND STEEL FRAMING PLAN - SPAN 10
Scale 1/8" = 1'-0"

Note: Brg. Stiff. Fascia Girder 2 Pl's 11'-11 1/16"
Brg. Stiff. Inter. Girder 2 Pl's 10" x 1"

Bottom Lateral Bracing connections details similar to Span 4 & 5 details

BOTTOM OF SLAB ELEVATIONS

SOUTHBOUND

GIRDER	SPAN	℄ EXP. BRGS.	℄ SPAN	℄ FIX. BRGS.
G1	10	443.54	442.46	441.26
G2	10	443.72	442.49	441.15
G3	10	443.70	442.40	440.99
G4	10	443.45	442.16	440.77

NORTHBOUND

GIRDER	SPAN	℄ EXP. BRGS.	℄ SPAN	℄ FIX. BRGS.
G1	10	443.50	442.49	441.39
G2	10	443.56	442.42	441.19
G3	10	443.43	442.24	440.98
G4	10	443.17	442.00	440.75

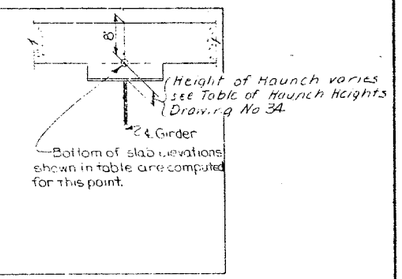

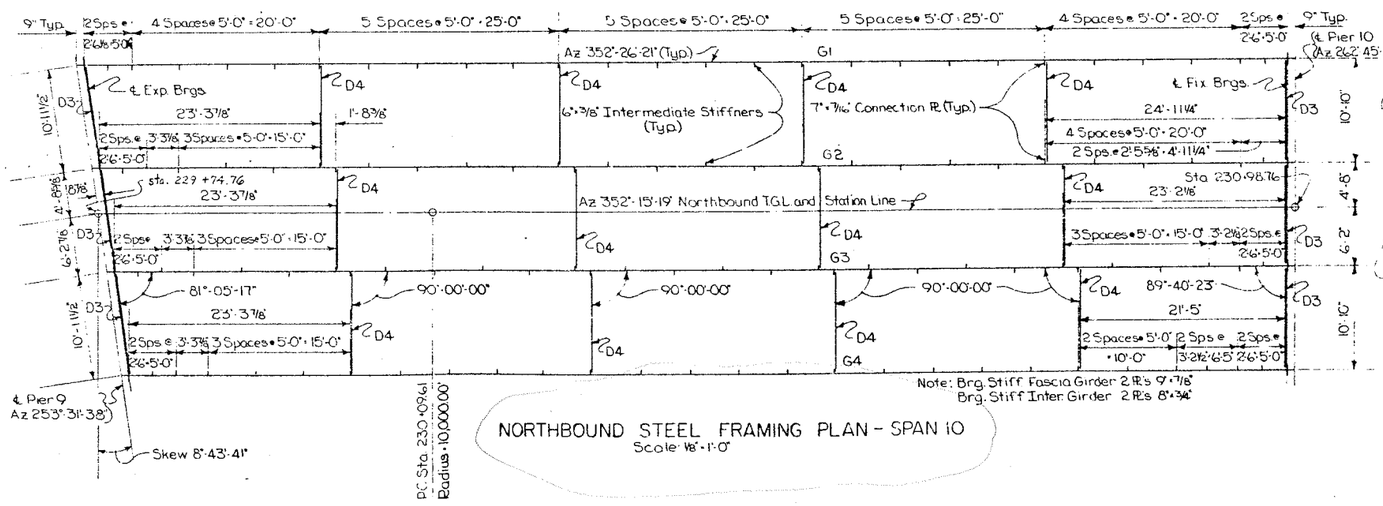

NORTHBOUND STEEL FRAMING PLAN - SPAN 10
Scale 1/8" = 1'-0"

Note: Brg. Stiff. Fascia Girder 2 Pl's 9" x 7/16"
Brg. Stiff. Inter. Girder 2 Pl's 8" x 3/4"

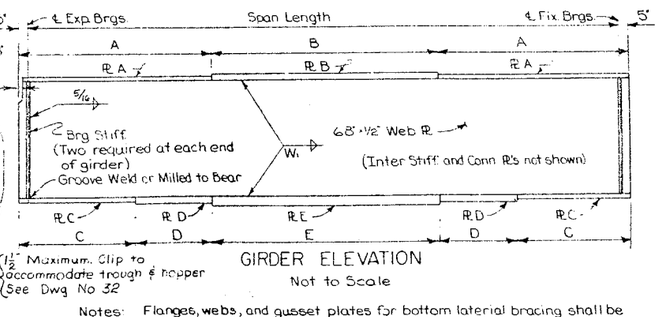

GIRDER ELEVATION
Not to Scale

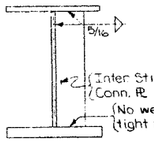

TYPICAL SECTION
Not to Scale

Notes: Flanges, webs, and gusset plates for bottom lateral bracing shall be A.S.T.M. Designation A441 Steel.
Diaphragms, stiffeners, bearings, and bottom lateral bracing (except gusset plates) shall be A.S.T.M. Designation A36 Steel.

WELD SIZE TABLE

Thickness of Flange	W1 Size of fillet weld joining web to flange
1 1/2" and under	5/16"
over 1 1/2" to 2 1/4"	3/8"
over 2 1/4"	1/2"

SPAN 10 GIRDER TABLE

	GIRDER	SPAN LENGTH ℄ TO ℄ BRGS.	FLANGE PLATE SIZES Pl. A	Pl. B	Pl. C	Pl. D	Pl. E	FLANGE PLATE LENGTHS A	B	C	D	E	DEFLECTIONS (FT) STEEL	CONC.	S.D.L.	TOTAL	CAMBER V.C.C. (FT.)	TOTAL (FEET)	TOTAL (INCHES)	STUD SHEAR CONNECTOR SPACING
Southbound	G1	138'-8 13/16"	23" x 1"	23" x 1 1/2"	24" x 1"	24" x 2"	24" x 2 1/2"	36'-9 7/16"	66'-0"	20'-3 7/16"	19'-0"	61'-0"	0.10	0.15	0.11	0.36	.06	0.42'	5"	138 Spaces @ 12" = 138'-0"
	G2	137'-0 3/16"	19" x 7/8"	19" x 1 1/2"	24" x 1"	None	24" x 2"	32'-11 1/16"	72'-0"	23'-5 1/16"	0	91'-0"	0.11	0.28	0.04	0.43	.06	0.49	5 7/8"	137 Spaces @ 12" = 137'-0"
	G3	135'-3 5/8"	19" x 7/8"	19" x 1 1/2"	24" x 1"	None	24" x 2"	32'-0 9/16"	72'-0"	22'-6 9/16"	0	91'-0"	0.10	0.27	0.04	0.41	.05	0.46	5 1/2"	135 Spaces @ 12" = 135'-0"
	G4	133'-7"	23" x 1"	23" x 1 1/2"	24" x 1"	24" x 2"	24" x 2 1/2"	34'-2 1/2"	66'-0"	17'-8 1/2"	19'-0"	61'-0"	0.09	0.13	0.09	0.31	.05	0.36	4 3/8"	133 Spaces @ 12" = 133'-0"
Northbound	G1	125'-0 1/4"	17" x 3/4"	17" x 1 1/2"	24" x 1"	None	24" x 2"	28'-11 1/8"	68'-0"	21'-5 1/8"	0	83'-0"	0.07	0.12	0.09	0.28	.05	0.33	4"	125 Spaces @ 12" = 125'-0"
	G2	123'-3 1/8"	14" x 3/4"	14" x 1 1/2"	23" x 1"	None	23" x 1 1/2"	27'-6 9/16"	69'-0"	28'-0 9/16"	0	68'-0"	0.08	0.24	0.03	0.35	.05	0.40	4 3/4"	123 Spaces @ 12" = 123'-0"
	G3	121'-6"	14" x 3/4"	14" x 1 1/2"	23" x 1"	None	23" x 1 1/2"	26'-8"	69'-0"	27'-2"	0	68'-0"	0.07	0.23	0.03	0.33	.04	0.37	4 1/2"	121 Spaces @ 12" = 121'-0"
	G4	119'-8 7/8"	17" x 3/4"	17" x 1 1/2"	24" x 1"	None	24" x 2"	26'-3 7/16"	68'-0"	18'-9 7/16"	0	83'-0"	0.06	0.10	0.08	0.24	.04	0.28	3 3/8"	119 Spaces @ 12" = 119'-0"

G4 33.54 17.24
G1 28.51 21.01
G2 27.13 27.63
G3 26.25 26.75
G4 25.8698 18.3698

S.D.L. = superimposed dead load, includes weight of railing and parapet.
V.C.C. = vertical curve correction

PROJECT ENGINEER R. L. Parker
IN CHARGE OF F. Eckel
DESIGNED BY S. Rowe
DESIGN CHECKED BY Tippett & Smith
DETAILED BY J. F. Darcy
DETAIL CHECKED BY [illegible]

BRIDGE NO. 2
INTERSTATE ROUTE 481 OVER DEWITT YARDS

SPAN 10 NB & SB

DRAWING NO. 26 OF 50

FED. RD. REG. NO.	STATE	FEDERAL AID PROJECT NO.	SHEET NO.	TOTAL SHEETS
1	NEW YORK	I-88(-9)(13) I-481-2(116)	205	309

INTERSTATE ROUTE CONNECTION 570
BUTTERNUT INTERCHANGE (PHASE 2)
ONONDAGA COUNTY

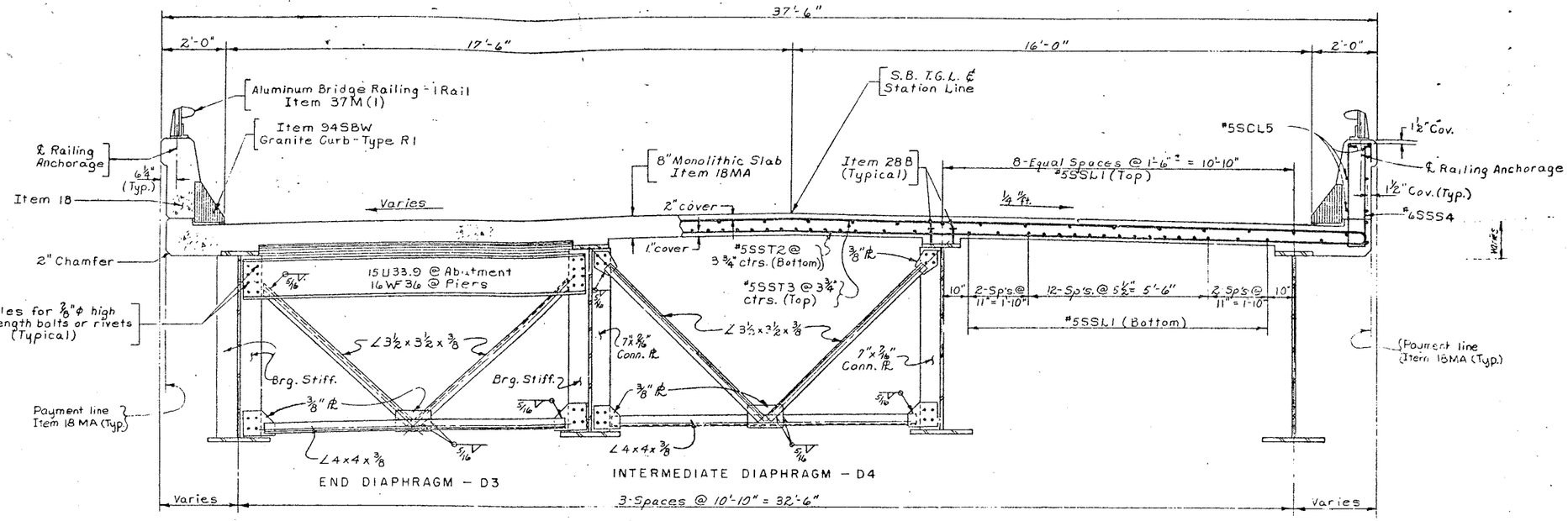

TRANSVERSE SECTION SOUTHBOUND SPANS 11,12,13,14 & 15
Scale: ½" = 1'-0"

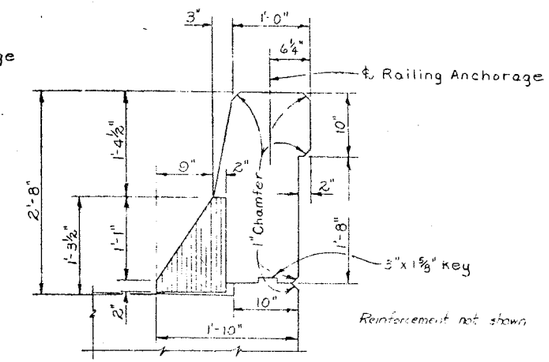

PARAPET DETAIL
Scale: 1" = 1'-0"

PARAPET REINFORCEMENT PLAN (Not to Scale)

Note: East parapet shown, West parapet similar by rotation.

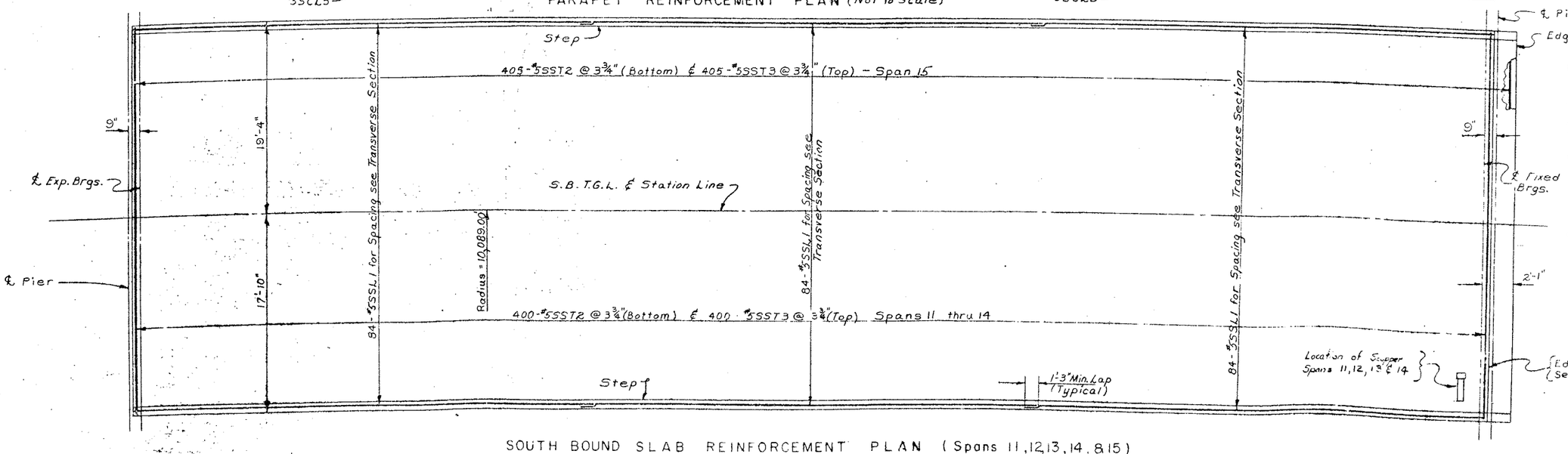

SOUTH BOUND SLAB REINFORCEMENT PLAN (Spans 11,12,13,14 & 15)
Scale: 3/16" = 1'-0"

Notes:

Holes for ⅞"ϕ rivets or high strength bolts may be omitted and welding substituted if contractor so elects. When the contractor elects to substitute the welded connection for the bolted connection shown, the amount of welding used shall be equivalent in strength to the bolts removed.

For details of Railing, Railing Anchorage and Granite Curbs see Dwgs. #35 and 36. For Joint Details see Dwg. #33 & 34.

PROJECT ENGINEER R. Parker
IN CHARGE OF J. B. Sherman
DESIGNED BY D. H. Smith
DESIGN CHECKED BY S. Rowe
DETAILED BY J. C. Thompson
DETAIL CHECKED BY [illegible]

BRIDGE NO. 2
INTERSTATE ROUTE 481 OVER DEWITT YARDS

SPANS 11 THRU 15 SOUTHBOUND

DRAWING NO. 37 OF 50

FED. RD. REG. NO.	STATE	FEDERAL AID PROJECT NO.	SHEET NO	TOTAL SHEETS
1	NEW YORK	I-690-3(28) I-481 2(18)	206	309

INTERSTATE ROUTE CONNECTION STO
DEWITT [illegible] (PHASE 2)
ONONDAGA COUNTY

TABLE OF STATIONS

SPAN	STATION "A" STATION	STATION "A" ℄	STATION "B" STATION	STATION "B" ℄	STATION "C" STATION	STATION "C" ℄
11 S.B.	232+63.86	℄ Pier #9 S.B.	233+88.86	℄ Pier #10 S.B.	—	—
12 S.B.	233+88.86	℄ Pier #10 S.B.	235+13.86	℄ Pier #11 S.B.	—	—
13 S.B.	235+13.86	℄ Pier #11 S.B.	236+38.86	℄ Pier #12 S.B.	—	—
14 S.B.	236+38.86	℄ Pier #12 S.B.	237+63.86	℄ Pier #13 S.B.	—	—
15 S.B.	237+63.86	℄ Pier #13 S.B.	—	—	238+88.11	℄ Fixed Brgs No. Abut. (S.B.)

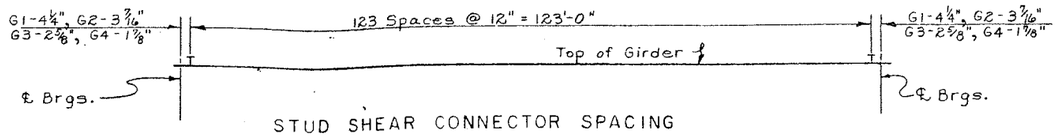

STUD SHEAR CONNECTOR SPACING
Not to Scale

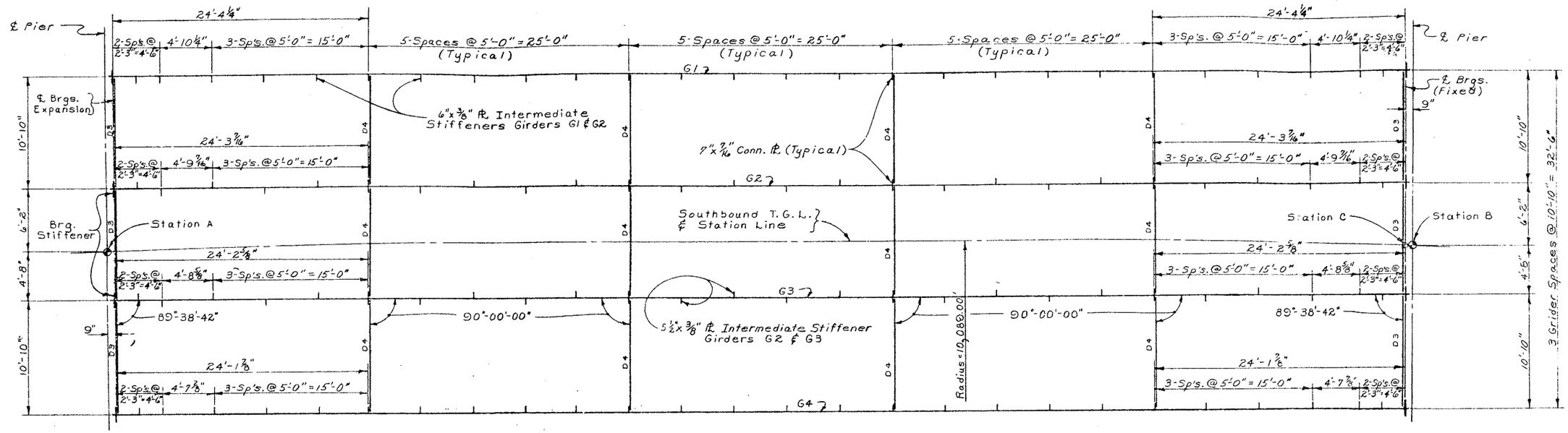

Note:
See Transverse Section for Diaphragms.

STEEL FRAMING PLAN (SPANS 11, 12, 13, 14 & 15 SOUTHBOUND)
Scale: 3/16" = 1'-0"

Notes:

Web and flanges shall be A.S.T.M. designation A441 Steel.

Stiffeners, connection plates, and diaphragms shall be A.S.T.M. designation A36 Steel.

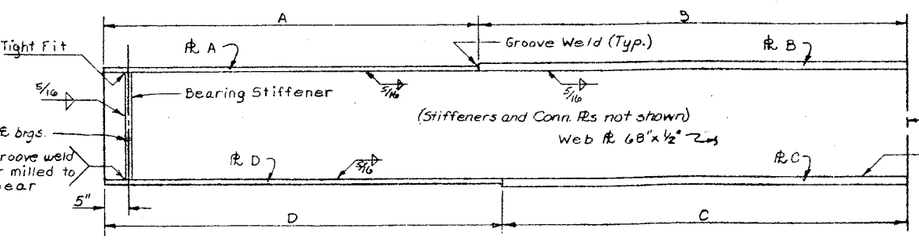

GIRDER ELEVATION
Not to Scale

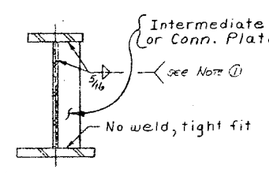

TYPICAL SECTION
Not to Scale

Note ①: Where connection plates are used in pairs, the fillet weld at top of stiffener is optional. See Note "Sup 4" in the Superstructure Notes.

THEO. BOTTOM OF SLAB ELEV. (Southbound)

GIRDER	SPAN	℄ So. Brg.	℄ Span	℄ No. Brg.
G1	11	441.24	440.03	438.56
G2	11	441.12	439.30	438.33
G3	11	440.96	439.58	438.11
G4	11	440.74	439.35	437.88
G1	12	438.52	436.95	435.30
G2	12	438.29	436.73	435.07
G3	12	438.07	436.50	434.85
G4	12	437.84	436.27	434.62
G1	13	435.66	433.51	431.67
G2	13	435.03	433.28	431.45
G3	13	434.81	433.06	431.22
G4	13	434.58	432.83	431.00
G1	14	431.63	429.72	427.89
G2	14	431.40	429.49	427.66
G3	14	431.18	429.26	427.44
G4	14	430.95	429.04	427.21
G1	15	427.85	426.16	424.62
G2	15	427.62	425.93	424.39
G3	15	427.40	425.71	424.16
G4	15	427.17	425.48	423.94

SPAN	GIRDER	DEFLECTIONS (ft.) STEEL	SLAB	SDL	TOTAL	CAMBER VCC (ft)	TOTAL (ft)	TOTAL (in.)
Spans 11, 12 & 13 (S.B.)	G1 and G4	.07	.12	.08	.27	.04	.31	3¾
	G2 and G3	.08	.24	.03	.35	.04	.39	4⅝
Span 14 (S.B.)	G1 and G4	.07	.12	.08	.27	.05	.22	2⅝
	G2 and G3	.08	.24	.03	.35	-.05	.30	3⅝
Span 15 (S.B.)	G1 and G4	.07	.12	.08	.27	-.07	.20	2⅜
	G2 and G3	.08	.24	.03	.35	-.07	.28	3⅜

S.D.L. = Superimposed Dead Load (includes weight of parapet and railing.)

V.C.C. = Vertical Curve Correction

TABLE OF AZIMUTHS

LOCATION	AZIMUTHS
℄ Pier #10 (S.B.)	262°-32'-11"
℄ Pier #11 (S.B.)	263°-14'-46"
℄ Pier #12 (S.B.)	263°-57'-22"
℄ Pier #13 (S.B.)	264°-39'-57"
℄ Pier #14 (S.B.)	265°-22'-33"
℄ Fixed Brgs. @ North Abut. (S.B.)	266°-05'-08"
℄ Girders, Span 11 (SB)	352°-53'-28"
℄ Girders, Span 12 (S.B.)	353°-36'-04"
℄ Girders, Span 13 (S.B.)	354°-18'-40"
℄ Girders, Span 14 (S.B.)	355°-01'-15"
℄ Girders, Span 15 (S.B.)	355°-43'-51"

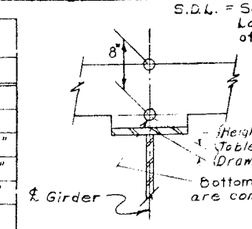

SOUTHBOUND GIRDER TABLE — SPANS 11 thru 15

GIRDER	SPAN C. to C. BRGS.	FLANGE SIZES PL A	PL B	PL C	PL D	FLANGE DIMENSIONS A	B	C	D	Brg. Stiffener 2-Ls. required each end of Girder	Intermediate Stiffener Size
G1	123'-8½"	16"x¾"	16"x1½"	23"x2"	23"x1"	28'-9¼"	33'-6"	40'-6"	21'-5¼"	9"x⅞"	6"x⅜"
G2	123'-6 15/16"	13"x¾"	13"x1½"	22"x1½"	22"x1"	28'-8 7/16"	33'-6"	33'-6"	28'-8 7/16"	8"x¾"	5½"x⅜"
G3	123'-5 5/16"	13"x¾"	13"x1½"	22"x1½"	22"x1"	28'-7⅝"	33'-6"	33'-6"	28'-7⅝"	8"x¾"	5½"x⅜"
G4	123'-3 11/16"	16"x¾"	16"x1½"	23"x2"	23"x1"	28'-6⅞"	33'-6"	40'-6"	21'-6⅞"	9"x⅞"	6"x⅜"

BRIDGE NO. 2
INTERSTATE ROUTE 481 OVER DEWITT YARDS

SPANS 11 THRU 15 SOUTHBOUND

DRAWING NO. 28 OF 50

PROJECT ENGINEER R. Parker
IN CHARGE OF J. B. Sherman
DESIGNED BY N. J. Toppses
DESIGN CHECKED BY S. Rowe
DETAILED BY J. C. Thompson
DETAIL CHECKED BY [illegible]

FED. RD. REG. NO.	STATE	FEDERAL AID PROJECT NO.	SHEET NO.	TOTAL SHEETS
1	NEW YORK	I-690-3(28) I-481-2(1)(2)	207	309

INTERSTATE ROUTE CONNECTION 570
BUTTERNUT INTERCHANGE (PHASE 2)
ONONDAGA COUNTY

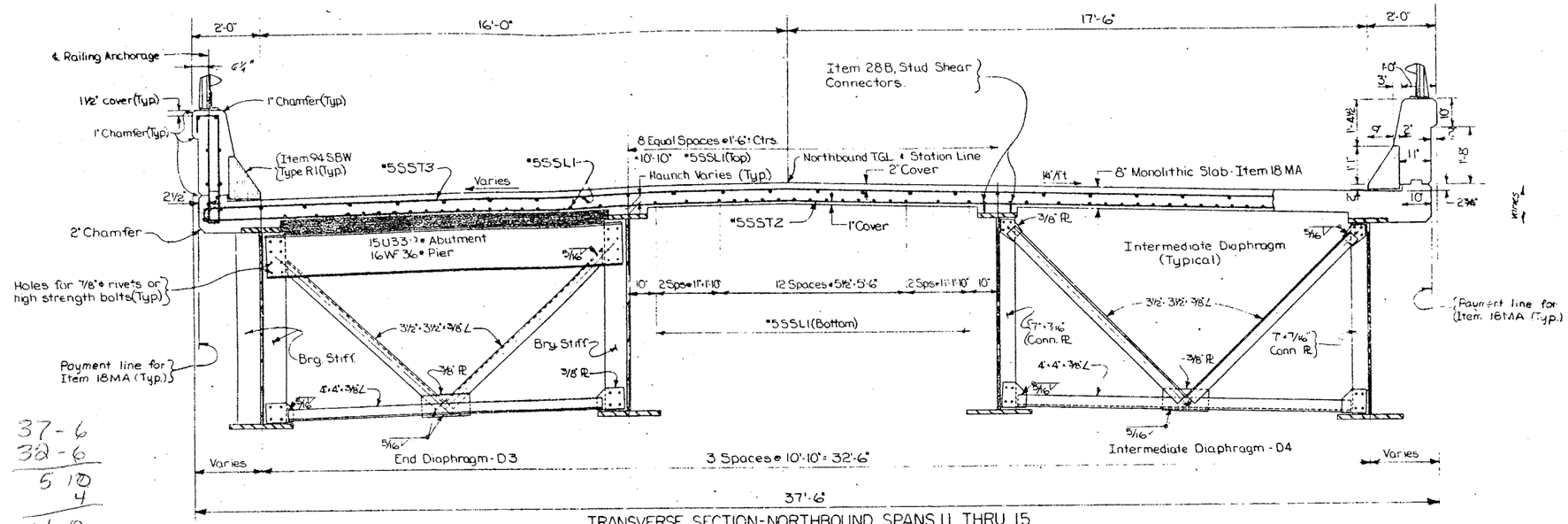

TRANSVERSE SECTION - NORTHBOUND SPANS 11 THRU 15
Scale ½" = 1'-0"

37-6
32-6
5 10
4
4-8
2-4

Notes:
Holes for 7/8" ϕ rivets or high strength bolts may be omitted and welding substituted if the contractor so elects. When the contractor elects to substitute the Welded Connection for the Bolted Connection shown, the amount of welding used shall be equivalent in strength to the bolts removed.

For details of Railing, Railing Anchorage, Granite Curbs and Joint Details, See Misc Detail Sheets.

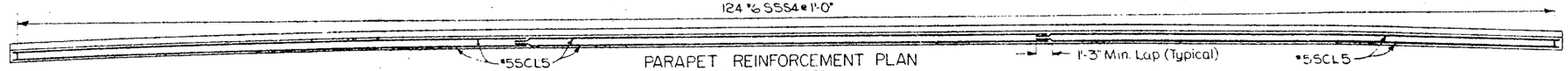

PARAPET REINFORCEMENT PLAN
Scale: 3/16" = 1'-0"

Note: West parapet shown
East parapet similar

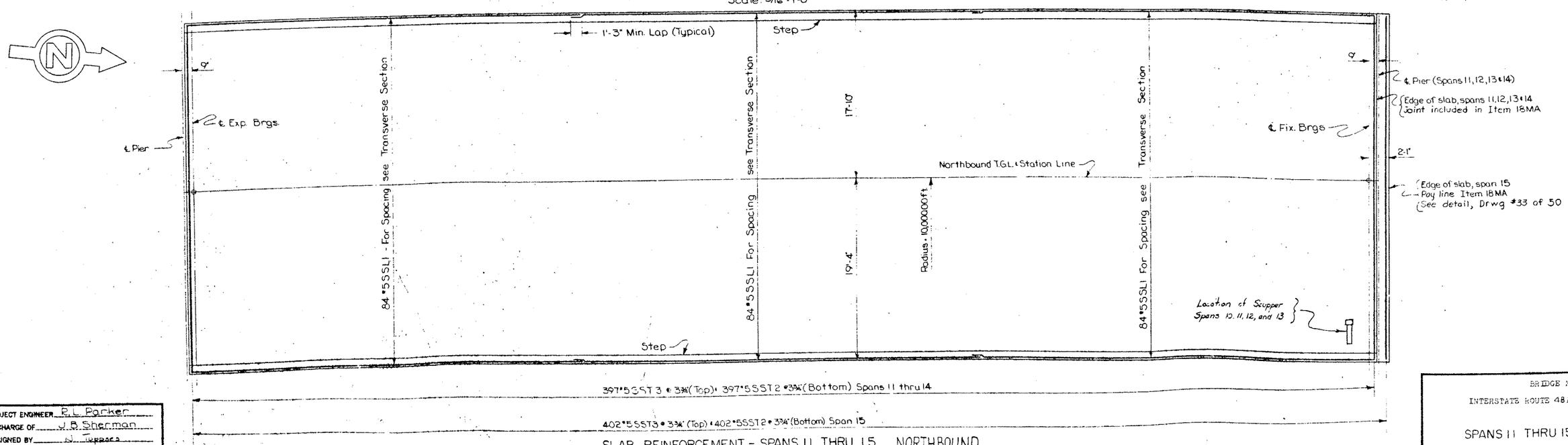

SLAB REINFORCEMENT - SPANS 11 THRU 15 NORTHBOUND
Scale: 3/16" = 1'-0"

PROJECT ENGINEER R. L. Parker
IN CHARGE OF J. B. Sherman
DESIGNED BY N. Terrace
DESIGN CHECKED BY R. Smith
DETAILED BY J. F. Darcy
DETAIL CHECKED BY J. W. Eble

BRIDGE NO. 2
INTERSTATE ROUTE 481 OVER DEWITT YARDS

SPANS 11 THRU 15 NORTHBOUND

DRAWING NO. 29 OF 50

F.I.S.H. 70-7

FED. RD. REG. NO.	STATE	FEDERAL AID PROJECT NO.	SHEET NO.	TOTAL SHEETS
1	NEW YORK	I-690-3(23) I-481-2(113)	208	309

INTERSTATE ROUTE CONNECTION 570
BUTTERNUT INTERCHANGE (PHASE 2)
ONONDAGA COUNTY

345-5584

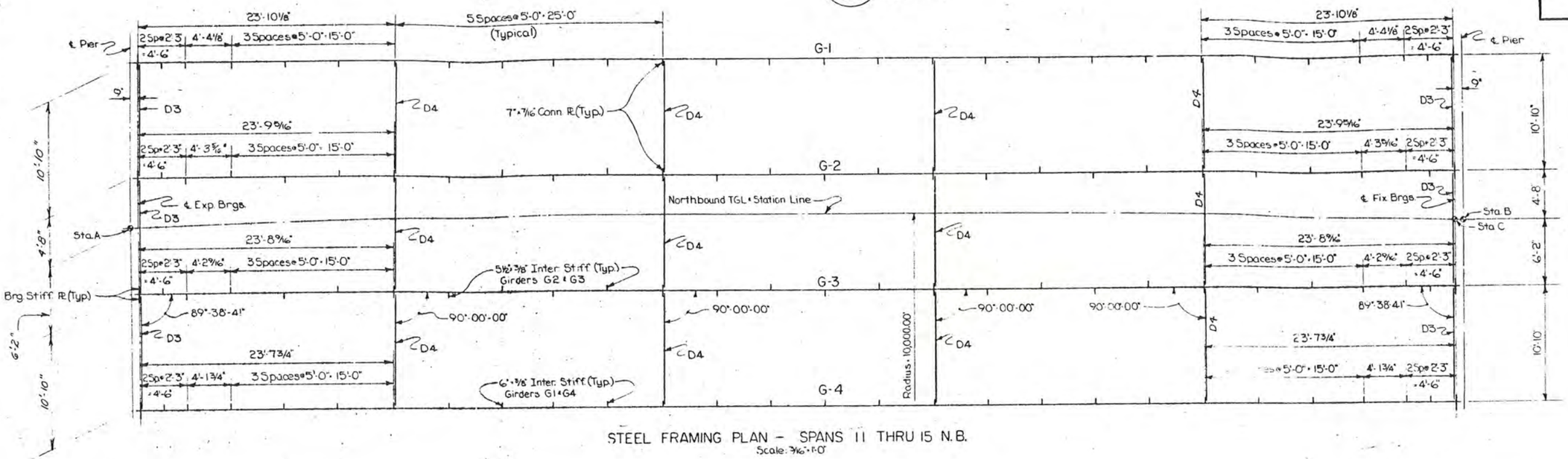

STEEL FRAMING PLAN – SPANS 11 THRU 15 N.B.
Scale: 3/16" = 1'-0"

TABLE OF AZIMUTHS	
LOCATION	AZIMUTH
℄ Pier #10 N.B.	262°-45'-57"
℄ Pier #11 N.B.	263°-28'-36"
℄ Pier #12 N.B.	264°-11'-13"
℄ Pier #13 N.B.	264°-53'-51"
℄ Pier #14 N.B.	265°-36'-28"
℄ Fixed Bearings @ North Abutment N.B.	266°-19'-06"
℄ girders, Span 11 N.B.	353°-07'-17"
℄ girders, Span 12 N.B.	353°-49'-55"
℄ girders, Span 13 N.B.	354°-32'-32"
℄ girders, Span 14 N.B.	355°-15'-10"
℄ girders, Span 15 N.B.	355°-57'-47"

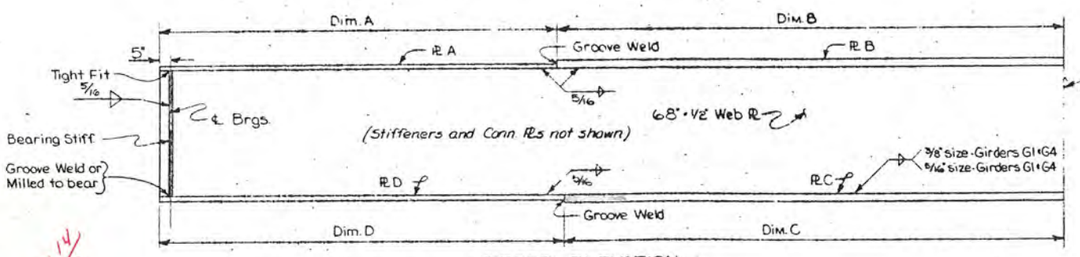

GIRDER ELEVATION
Not to Scale

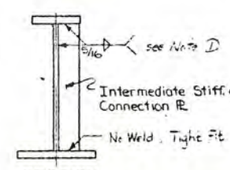

SECTION

Web and flanges shall be A.S.T.M. Designation A441 Steel. Stiffeners, connection plates and diaphragms shall be A.S.T.M. Designation A36 Steel.

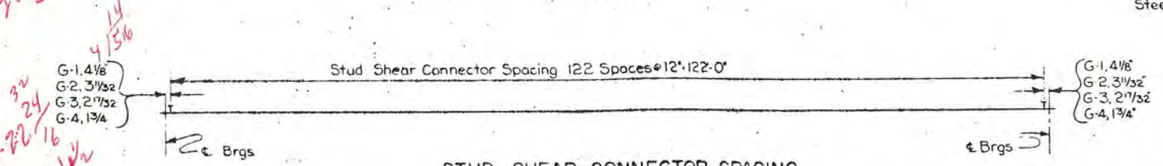

STUD SHEAR CONNECTOR SPACING
Not to Scale

Note ①: Where connection plates are used in pairs, the fillet weld at top of stiffener is optional. See Note "Sup 4" in the Superstructure Notes.

BOTTOM OF SLAB ELEVATIONS				
NORTHBOUND				
GIRDER	SPAN	℄ EXP. BRGS.	℄ SPAN	℄ FIX. BRGS.
G-1	11	441.36	440.02	438.57
G-2	11	441.16	439.80	438.34
G-3	11	440.94	439.57	438.12
G-4	11	440.72	439.34	437.89
G-1	12	438.53	436.98	435.34
G-2	12	438.30	436.75	435.12
G-3	12	438.08	436.52	434.89
G-4	12	437.85	436.30	434.66
G-1	13	435.30	433.57	431.75
G-2	13	435.07	433.34	431.53
G-3	13	434.85	433.12	431.30
G-4	13	434.62	432.89	431.08
G-1	14	431.71	429.80	427.98
G-2	14	431.48	429.57	427.75
G-3	14	431.26	429.34	427.53
G-4	14	431.03	429.12	427.30
G-1	15	427.93	426.25	424.71
G-2	15	427.71	426.02	424.48
G-3	15	427.48	425.80	424.26
G-4	15	427.26	425.57	424.03

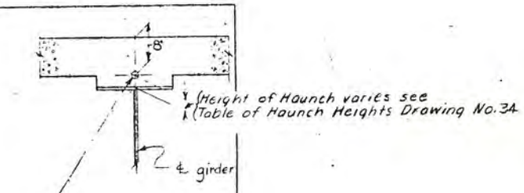

NORTHBOUND GIRDER TABLE – SPANS 10 THRU 14											
	SPAN LENGTH	FLANGE SIZE				FLANGE DIMENSIONS				BEARING STIFF. 2 PLs Required at each end of girder	INTERMEDIATE STIFFENER SIZE
GIRDER	℄ TO ℄ BEARINGS	PL A	PL B	PL C	PL D	A	B	C	D		
G1	122'-8 9/16"	16" x 3/4"	16" x 1 1/2"	23" x 2"	23" x 1"	23'-3 1/8"	33'-6"	40'-6"	21'-3 1/8"	9" x 7/8"	6" x 3/8"
G2	122'-6 11/16"	13" x 3/4"	13" x 1 1/2"	22" x 1 1/2"	22" x 1"	28'-2 5/8"	33'-6"	33'-6"	28'-2 5/8"	8" x 3/4"	5 1/2" x 3/8"
G3	122'-5 1/16"	13" x 3/4"	13" x 1 1/2"	22" x 1 1/2"	22" x 1"	28'-1 9/16"	33'-6"	33'-6"	28'-1 9/16"	8" x 3/4"	5 1/2" x 3/8"
G4	122'-3 7/16"	16" x 3/4"	16" x 1 1/2"	23" x 2"	23" x 1"	28'-0 3/4"	33'-6"	40'-6"	21'-0 3/4"	9" x 7/8"	6" x 3/8"

27.84
27.78
27.71

20.84
27.84

	DEFLECTIONS (FT.)				CAMBER		
SPAN	GIRDER	STEEL	SLAB	S.D.L.	TOTAL	V.C.C. (FT.)	TOTAL FT.	TOTAL IN.
Spans 11, 12 & 13 Northbound	G1 & G4	.07	.12	.08	.27	.04	.31	3 3/4"
	G2 & G3	.08	.24	.03	.35	.04	.39	4 5/8"
Span 14 Northbound	G1 & G4	.07	.12	.08	.27	-.04	.23	2 3/4"
	G2 & G3	.08	.24	.03	.35	-.04	.31	3 3/4"
Span 15 Northbound	G1 & G4	.07	.12	.08	.27	-.07	.20	2 3/8"
	G2 & G3	.08	.24	.03	.35	-.07	.28	3 3/8"

V.C.C. - Vertical Curve Camber
S.D.L. (Superimposed Dead Load) - Includes weight of parapet & railing.

TABLE OF STATIONS						
SPAN	STATION A		STATION B		STATION C	
	STATION	℄	STATION	℄	STATION	℄
11 (NB)	230+98.76	℄ Pier #10 (NB)	232+22.76	℄ Pier #11 (NB)	—	—
12 (NB)	232+22.76	℄ Pier #11 (NB)	233+46.76	℄ Pier #12 (NB)	—	—
13 (NB)	233+46.76	℄ Pier #12 (NB)	234+70.76	℄ Pier #13 (NB)	—	—
14 (NB)	234+70.76	℄ Pier #13 (NB)	235+94.76	℄ Pier #14 (NB)	—	—
15 (NB)	235+94.76	℄ Pier #14 (NB)	—	—	237+18.01	℄ Fix Brgs N.A. (NB)

PROJECT ENGINEER R. L. Parker
CHARGE OF J. B. Sherman
DESIGNED BY J. Tapper
DESIGN CHECKED BY D. Smith
DETAILED BY J. F. Darcy
DETAIL CHECKED BY J. W. Fobel

BRIDGE NO. 2
INTERSTATE ROUTE 481 OVER DEWITT YARDS

SPANS 11 THRU 15 NORTHBOUND

DRAWING NO. 30 OF 50

FED. RD. REG. NO.	STATE	FEDERAL AID PROJECT NO.	SHEET NO.	TOTAL SHEETS
1	NEW YORK	~~I-690-3(48)~~ I-481-2(16)	209	309

INTERSTATE ROUTE CONNECTION 570
BUTTERNUT INTERCHANGE (PHASE 2)
ONONDAGA COUNTY

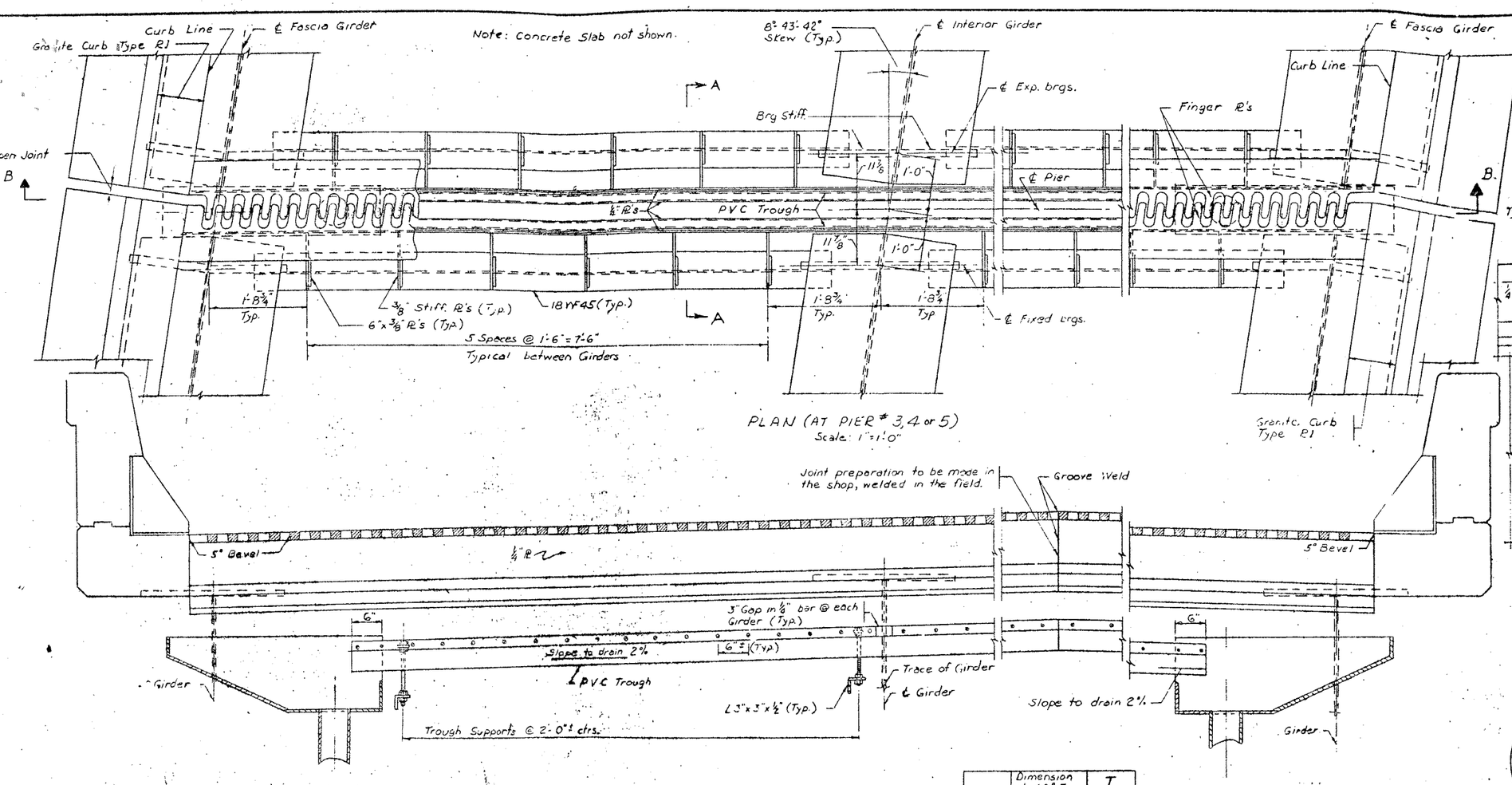

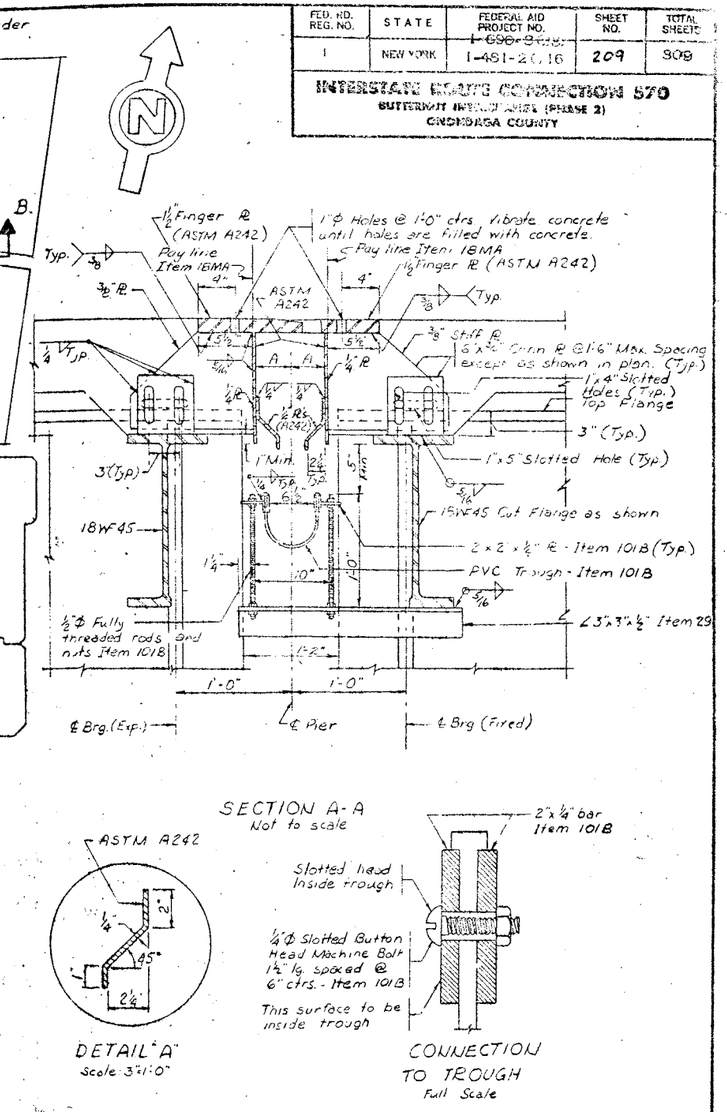

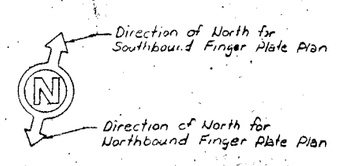

SECTION B-B
Scale: 1" = 1'-0"

	Dimension at 68° F	T
"A"	4 11/16"	5/32"
"B"	1 7/8"	5/32"

T is the decrease in the dimension for every 10° F rise in temperature (and the increase in the dimension for every 10° F fall in temperature)

SECTION A-A
Not to scale

DETAIL "A"
Scale: 3" = 1'-0"

CONNECTION TO TROUGH
Full Scale

NOTES:
Finger R's shall follow slope and grade of roadway. All steel shall be Item 29 unless otherwise indicated.
The 1/2" finger plates, the 1/4" vertical side plates, and 1/4" bent deflector plates shall be corrosion resistant steel A.S.T.M. Designation A242.

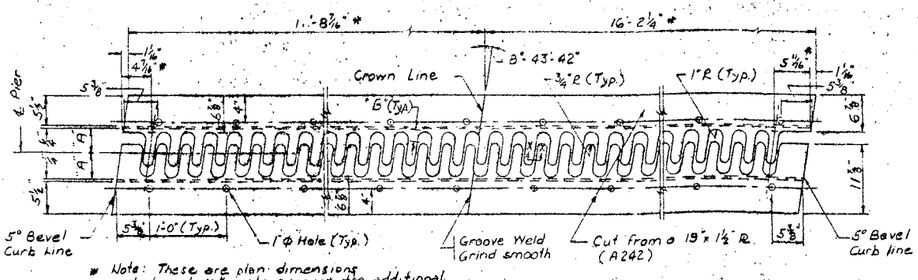

* Note: These are plan dimensions and do not take into account the additional length needed due to the cross slope and profile of the roadway.

FINGER PLATE PLAN
Scale: 1" = 1'-0"

SECTION X-X
No Scale

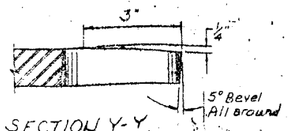

SECTION Y-Y
No Scale

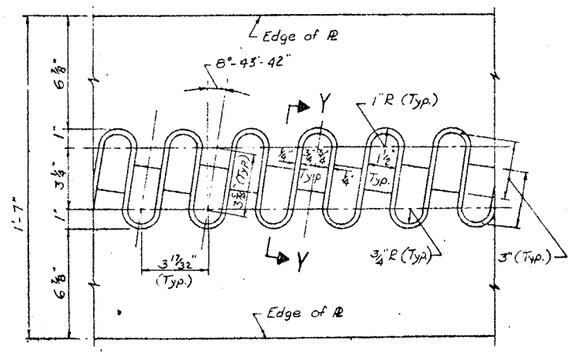

FINGER DETAIL
Scale: 3" = 1'-0"

PROJECT ENGINEER	R. Parker
IN CHARGE OF	V. Sherman
DESIGNED BY	N.A. Toppses
DESIGN CHECKED BY	F. Eckel
DETAILED BY	N.A. Toppses
DETAIL CHECKED BY	J. Kutcal

BRIDGE NO. 2
INTERSTATE ROUTE 481 OVER DEWITT YARDS

FINGER JOINT AT PIERS 3,4 & 5

DRAWING NO. 31 OF 50

FED. RD. REG. NO.	STATE	FEDERAL AID PROJECT NO.	SHEET NO.	TOTAL SHEETS
1	NEW YORK	I-690-3(23) I-481-2(16)	210	909

INTERSTATE ROUTE CONNECTION 570
BUTTERNUT INTERCHANGE (PHASE 2)
ONONDAGA COUNTY

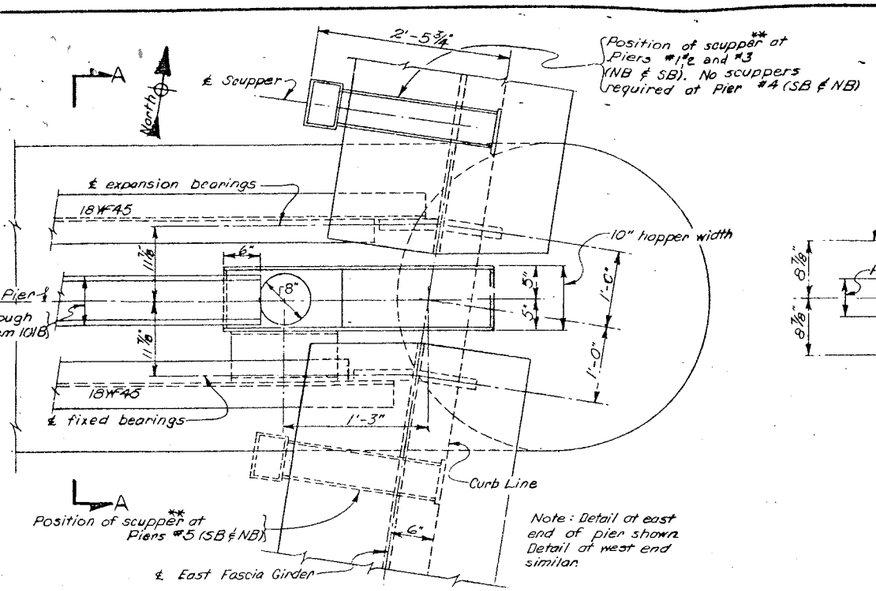

PLAN AT EAST END, PIERS 1,2,3,4 & 5 (NB & SB)

Scale: 1" = 1'-0"

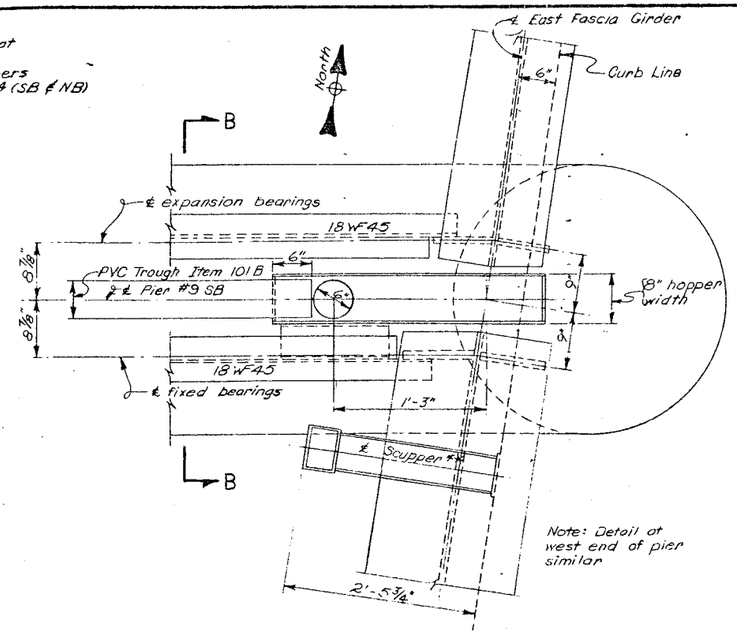

PLAN AT EAST END OF PIER #9 SOUTHBOUND

Scale: 1" = 1'-0"

** Adjust exact location of scuppers which drain into downspouts systems so as to accommodate the location of the downspouts.
Adjust exact location of scuppers which drain directly onto the ground so as not to spill on piers or onto diaphragms

Hoppers and downspouts (including all necessary pipe supports, hangers, and fittings) shall be paid for under Item 13DE-6 & Item 13DE-8.

Hopper shall be fabricated from steel plates, 3/8 inch thick, A.S.T.M. Designation A36 Steel. Hopper shall be galvanized after fabrication is complete in accordance with M19.

All bends in downspouts will be long radius bends. All indicated slopes on horizontal pipe runs will be the minimum allowed, and the long radius bends will be fabricated to take this slope into account. All costs involved will be included in the price bid for Item 13DE-6 & Item 13DE-8

PIER NO.	JOINTS: EXP. JT. SEALED WITH PREFORMED JOINT SEALER	JOINTS: OPEN JOINT WITH HOPPER AND TROUGH	JOINTS: FINGER JOINT WITH HOPPER AND TROUGH	SCUPPER **	DOWNSPOUT
1		✓		(East & West curb lines) (North side of Pier)	✓ (8" dia)
2		✓		(East & West curb lines) (North side of Pier)	✓ (8" dia)
3			✓	(East & West curb lines) (North side of Pier)	✓ (8" dia)
4			✓	None	✓ (8" dia.)
5			✓	(East & West curb lines) (South side of Pier)	✓ (8" dia)
6	✓			(East & West curb lines) (South side of Pier)	✓ (8" dia)
7	✓			(East & West curb lines) (South side of Pier)	✓ (8" dia.)
8	✓			(East & West curb lines) (South side of Pier)	
9	NB only	SB only		(East & West curb lines) (South side of Pier)	SB only (6" dia.)
10	✓			(East curb line only) (South side of Pier)	
11	✓			(East curb line only) (South side of pier)	
12	✓			(East curb line only) (South side of pier)	
13	✓			(East curb line only) (South side of pier)	
14	✓			(East curb line only) (South side of pier)	

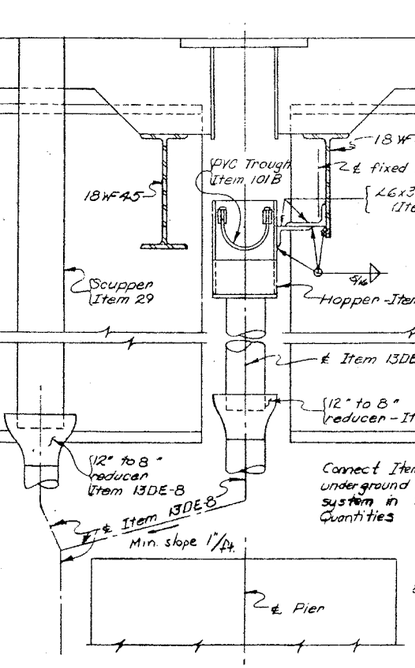

SECTION A-A

Scale: 1" = 1'-0"

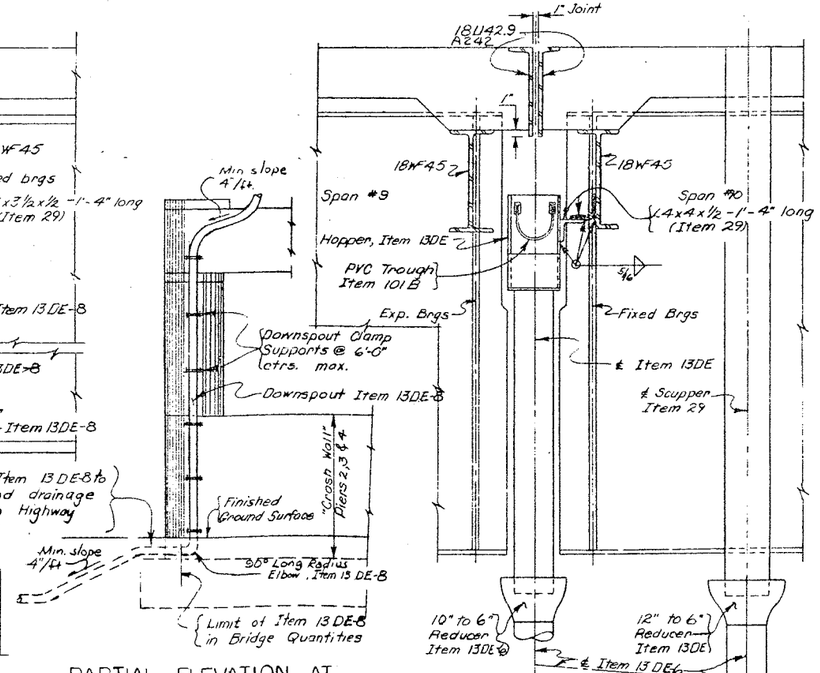

PARTIAL ELEVATION AT PIERS 1,2,3,4,5*,6 & 7 (NB & SB)

Scale: 3/16" = 1'-0"

*No Hopper at Piers #6 & #7 Downspout drains only the scupper.

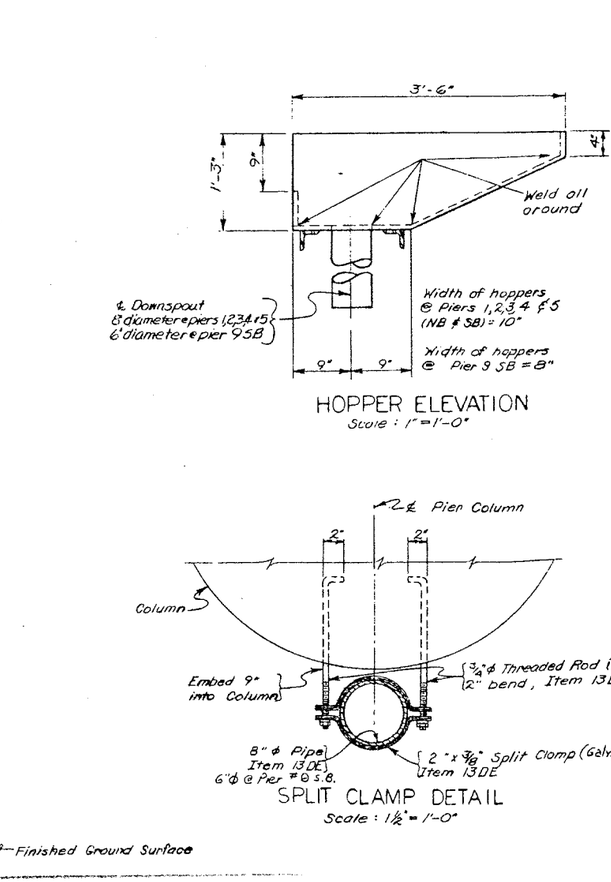

SECTION B-B

Scale: 1" = 1'-0"

HOPPER ELEVATION

Scale: 1" = 1'-0"

SPLIT CLAMP DETAIL

Scale: 1½" = 1'-0"

NOTES:
Six inch diameter downspouts shall be paid for under Item 13DE-6
Eight inch diameter downspouts shall be paid for under Item 13DE-8

PROJECT ENGINEER R. Parker
IN CHARGE OF F.W. Eckel
DESIGNED BY
DESIGN CHECKED BY
DETAILED BY J. Dunnant
DETAIL CHECKED BY F.W. Eckel

BRIDGE NO. 2
INTERSTATE ROUTE 481 OVER DEWITT YARDS

DOWNSPOUT DETAILS

DRAWING NO. 32 OF 50

FED. RD. REG. NO.	STATE	FEDERAL AID PROJECT NO.	SHEET NO.	TOTAL SHEETS
1	NEW YORK	I-080-8(18)	211	309

INTERSTATE ROUTE CONNECTION 690
DEWITT INTERCHANGE (PHASE 2)
ONONDAGA COUNTY

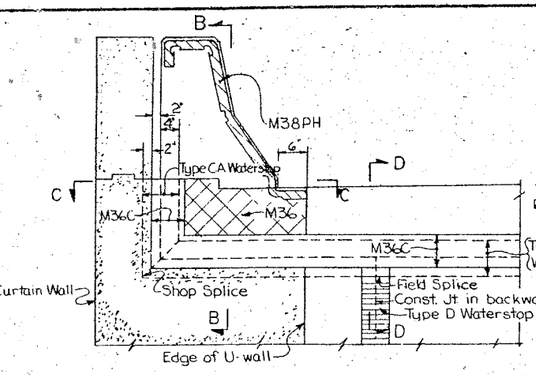

SECTION LOOKING TOWARD SUPERSTRUCTURE AT ABUTMENTS

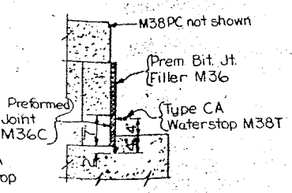

SECTION B-B

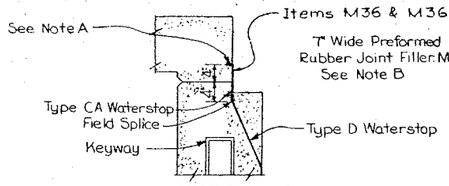

SECTION D-D

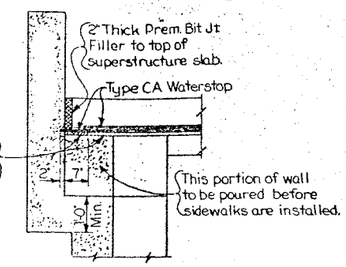

SECTION C-C

INSTALLATION OF WATER STOPS AT ABUTMENTS
Not to Scale

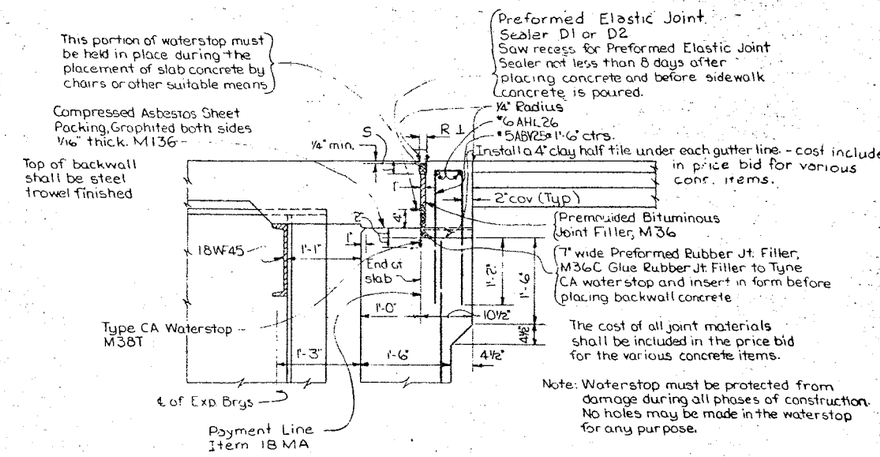

EXPANSION JOINT AT SOUTH ABUTMENT
Not to Scale

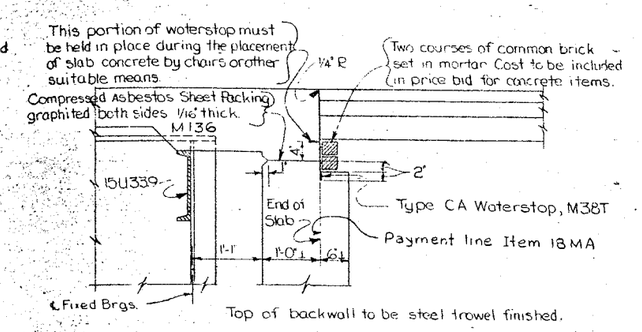

FIXED JOINT AT NORTH ABUTMENT
Not to Scale

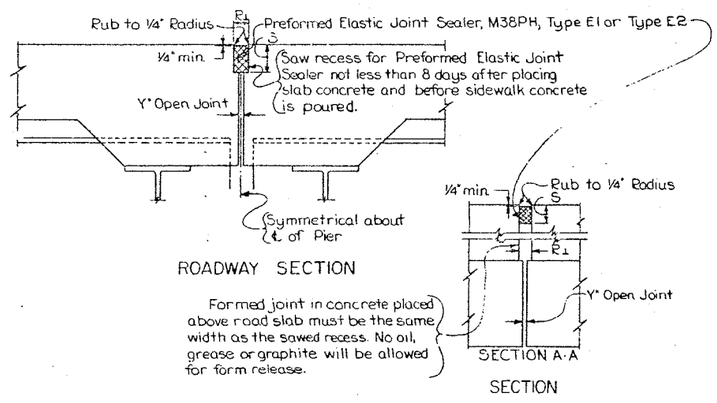

EXPANSION JOINT AT PIERS #6, #7, #8, #10 THRU #14 (NB & SB) & #9 (NB)
Not to Scale

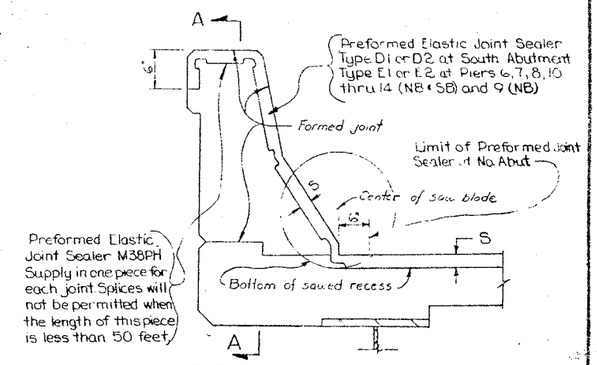

SECTION THRU TRANSVERSE JOINT

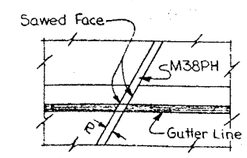

PLAN AT GRANITE CURB

PARAPET DETAILS FOR PREFORMED ELASTIC JOINT SEALER
Not to Scale

JOINT DIMENSIONS				
Preformed Elastic Joint Sealer	R	S	Y	T
Type E1	1 7/8"	4 1/8"	3/4"	3/32"
Type E2	1 7/8"	3 3/4"	3/4"	3/32"
Type D1	1 5/8"	3 3/8"	1"	3/64"
Type D2	1 5/8"	3 3/8"	1"	3/64"

Notes:
'R' dimension is measured at 68° F.
'T' is the amount that 'R' must be decreased for every 10° rise in temperature or increased for every 10° fall in temperature.

Notes. A) This portion of waterstop must be held in place during the placement of slab concrete by chairs or other suitable means.
B) Glue Rubber Joint Filler to Type CA Waterstop with an approved type of commercial cement and insert in form before placing backwall concrete.
Exposed waterstop must be protected from damage by suitable means during all phases of construction. No holes may be made in the waterstop for any purpose.
The cost of all joint materials shall be included in the price bid for the various concrete items.
All splices shall be thermal splices. Method for field splicing waterstops shall be approved by Deputy Chief Engineer, Design.

PROJECT ENGINEER R. L. Parker
IN CHARGE OF J. B. Sherman
DESIGNED BY
DESIGN CHECKED BY
DETAILED BY J. F. Darcy
DETAIL CHECKED BY J. W. Todd

BRIDGE NO. 2
INTERSTATE ROUTE 481 OVER DEWITT YARDS

MISCELLANEOUS DETAILS.

DRAWING NO. 33 OF 50

FED. RD. REG. NO.	STATE	FEDERAL AID PROJECT NO.	SHEET NO.	TOTAL SHEETS
1	NEW YORK	I-690-3(29) I-481-A(118)	212	309

INTERSTATE ROUTE 690 INTERCHANGE 570
BETTERNUT INTERCHANGE (STAGE 2)
ONONDAGA COUNTY

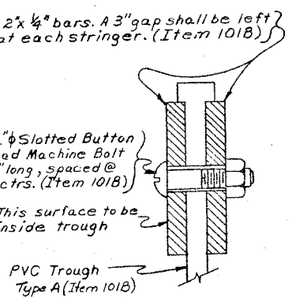

CONNECTION TO TROUGH
Not to Scale

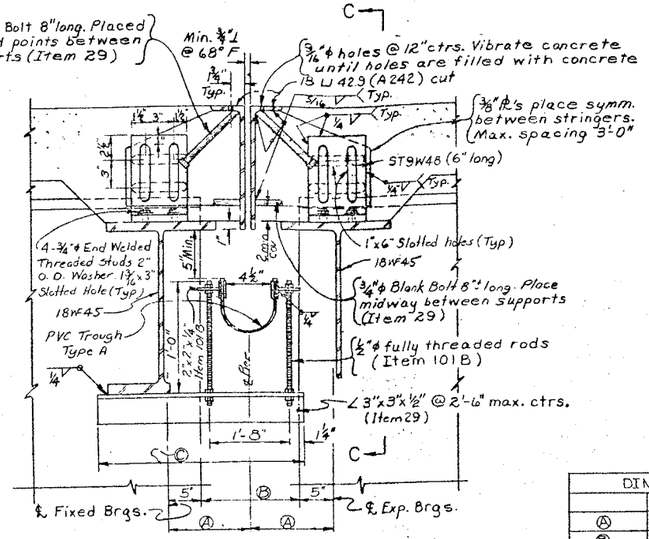

OPEN JOINT AT PIERS #9SB, #1 & #2 NB & SB
Not to Scale

DIMENSION TABLE		
	#1&2 NB·SB	#9SB
Ⓐ	1'-0"	9"
Ⓑ	1'-2"	8"
Ⓒ	2'-0"	1'-9"

Note:
¾"ϕ end welded headed studs, 8" ± long, may be substituted for the ¾"ϕ Blank Bolts.

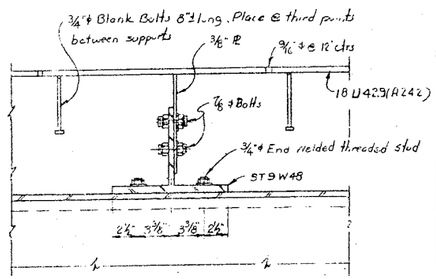

SECTION C-C
No Scale

TABLE OF HAUNCH HEIGHTS (AT ENDS OF GIRDERS)			
GIRDER		Height of Haunch	
		@ ℄ exp. brgs. (South end of Girder)	@ ℄ fix. brgs. (North End of Girder)
Span 1 (SB & NB)	Fascias (G1 & G4)	3 ½"	3½"
	Interiors (G2 & G3)	3 ½"	3½"
Spans 2 (SB & NB)	Fascias (G1 & G4)	3 ½"	3½"
	Interiors (G2 & G3)	3 ½"	3½"
Span 3 (SB & NB)	Fascias (G1 & G4)	3⅜"	3⅜"
	Interiors (G2 & G3)	3½"	3½"
Spans 4, 5 & 6 (SB & NB)	Fascias (G1 & G4)	3¼"	3¼"
	Interiors (G2 & G3)	3¼"	3¼"
Spans 7, 8 & 9 (SB & NB)	Fascias (G1 & G4)	3½"	3½"
	Interiors (G2 & G3)	3½"	3½"
Span 10 (Southbound)	Fascias (G1 & G4)	3¼"	3¼"
	Interiors (G2 & G3)	3⅜"	3⅜"
Span 10 (Northbound)	Fascias (G1 & G4)	3½"	3½"
	Interiors (G2 & G3)	3½"	3½"
Spans 11 to 15 S.B. & N.B.	Fascias (G1 & G4)	3½"	3½"
	Interiors (G2 & G3)	3½"	3½"

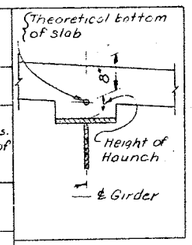

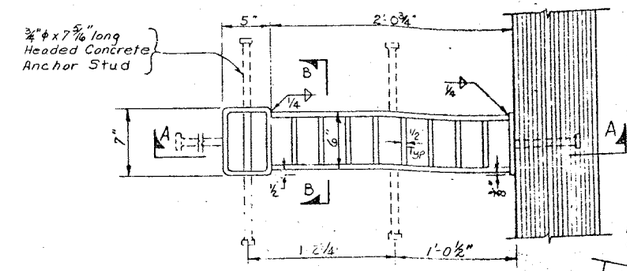

PLAN

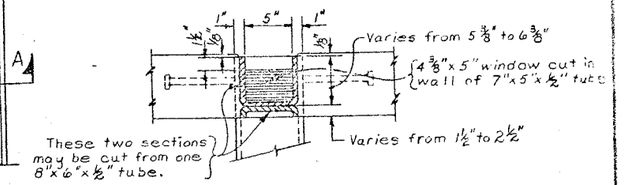

SECTION B-B

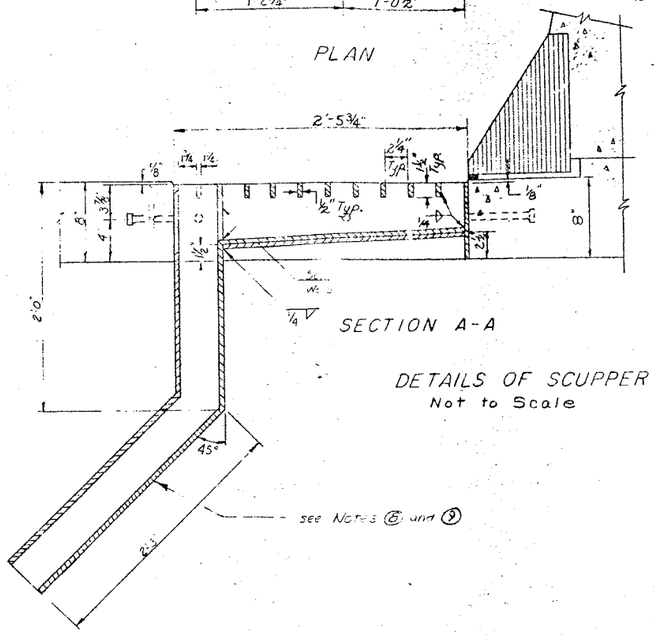

SECTION A-A

DETAILS OF SCUPPER
Not to Scale

Notes:
1. Material in Scupper - ½" thick.
2. Tubes - ASTM designation A500 grade A.
3. Plates or Bars - ASTM designation A36.
4. Anchor Studs - ASTM designation A108, grade designation 1015 or 1020.
5. Scupper shall be galvanized after fabrication is complete in accordance with M19.
6. Place top of Scupper on same slope as top of pavement.
7. Scupper shall be paid for under Item 29.
8. Scupper Outlet Detail shown is for use at scuppers adjacent to Piers #6 (S.B. & N.B.), #9 (N.B.), and #10 thru #14 (S.B. & N.B.).
9. Extend Scupper Outlet Tube vertically downward to Downspout (Item 13DE) at scuppers adjacent to Piers #1, 2, 3, 5, 6, 7 (all S.B. & N.B.) and Pier #9 (S.B.).
10. Adjust exact location of scuppers which drain into downspout system so as to accommodate the location of the downspouts.
11. Adjust exact location of scuppers which drain directly onto the ground so as not to spill on piers or onto steel diaphragms.

PROJECT ENGINEER R. Parker
IN CHARGE OF J.B. Sherman
DESIGNED BY S. Rouse
DESIGN CHECKED BY N.A. Toppes
DETAILED BY J.C. Thompson
DETAIL CHECKED BY J.W. Eal

BRIDGE NO. 2
INTERSTATE ROUTE 481 OVER DEWITT YARDS

MISCELLANEOUS DETAILS

DRAWING NO. 34 OF 57

FED. RD. REG. NO.	STATE	FEDERAL AID PROJECT NO.	SHEET NO.	TOTAL SHEETS
1	NEW YORK	SPO-STATE 1-481-2(116)	213	329

INTERSTATE ROUTE CONNECTION 570
BUFFALO INTERCHANGE (PHASE 2)
ONONDAGA COUNTY

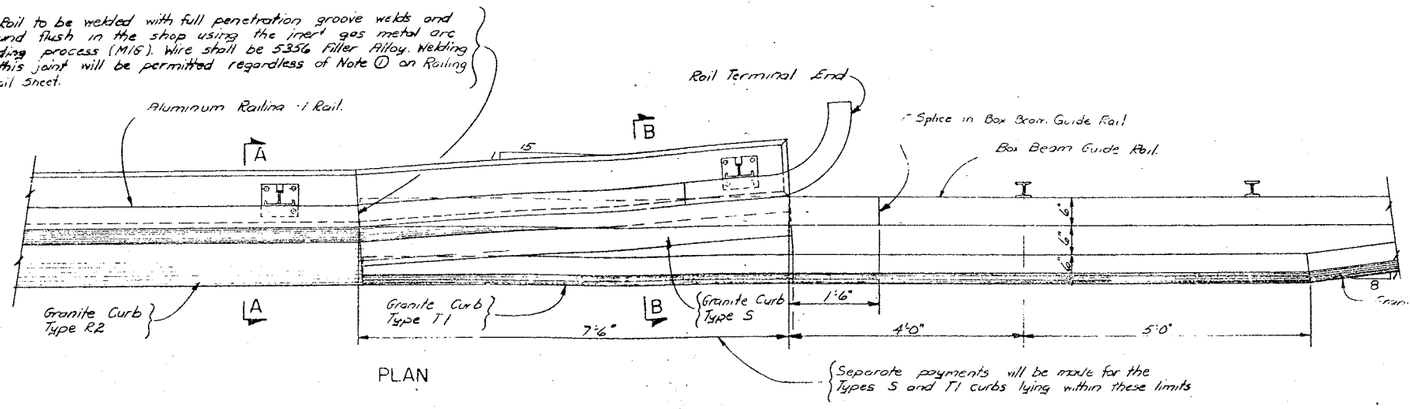

PLAN

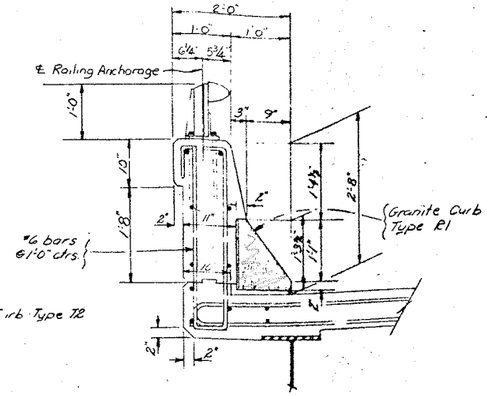

SECTION THRU SUPERSTRUCTURE

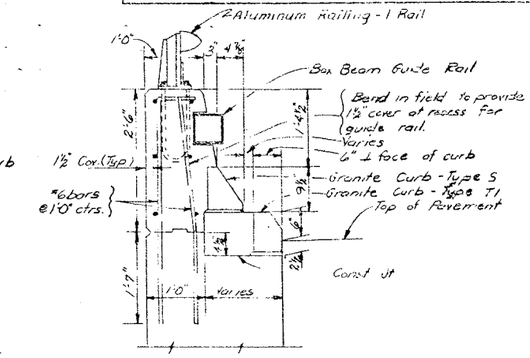

SECTION B-B

All chamfers shown on this sheet are 1" unless otherwise indicated.

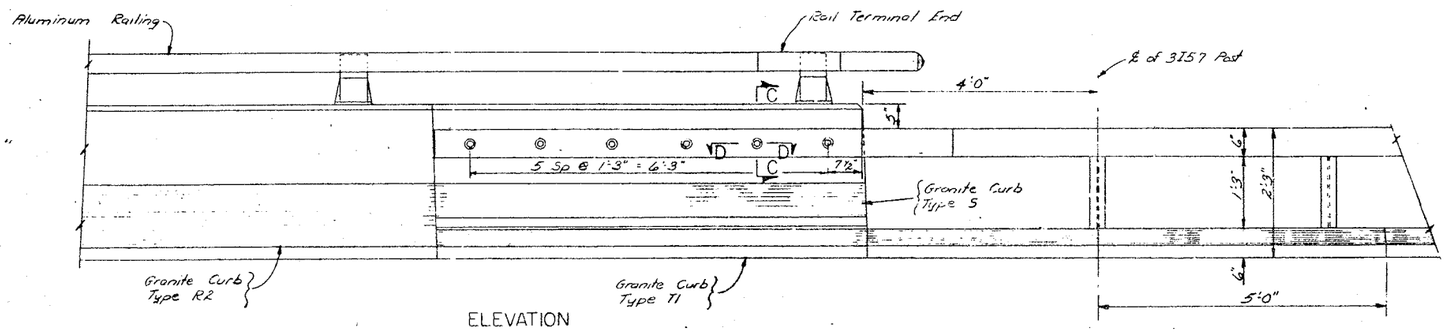

ELEVATION

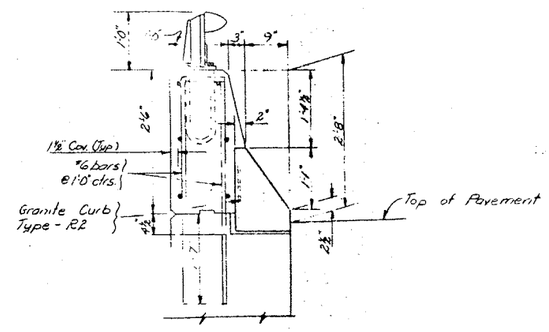

SECTION A-A

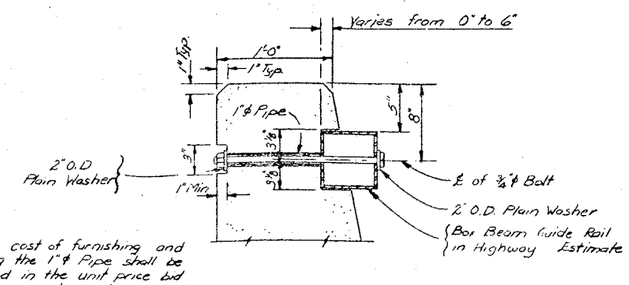

The cost of furnishing and placing the 1" ϕ Pipe shall be included in the unit price bid for the concrete in the parapet.

The cost of furnishing and placing the ¾" ϕ Bolts with their nuts and washers shall be included in the Box Beam Guide Rail Item.

SECTION C-C

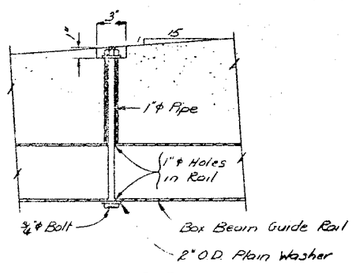

SECTION D-D

Note A:
Rake out joint to a depth of ¾" and tuck point flush with epoxy mortar.

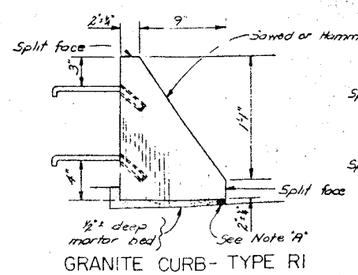

GRANITE CURB - TYPE R1

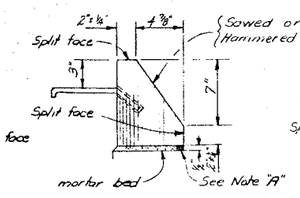

GRANITE CURB-TYPE S

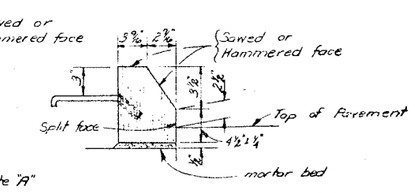

GRANITE CURB-TYPE T1

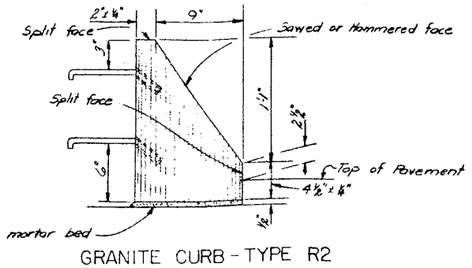

GRANITE CURB - TYPE R2

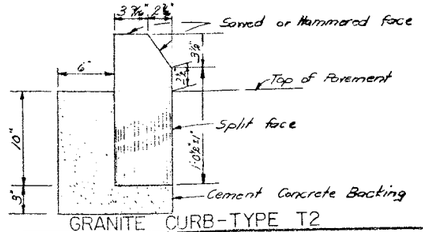

GRANITE CURB-TYPE T2

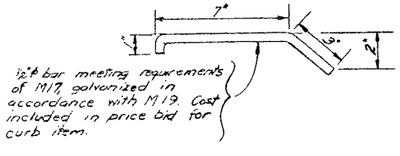

½" ϕ bar meeting requirements of M17, galvanized in accordance with M19. Cost included in price bid for curb item.

ANCHOR BAR

BRIDGE NO. 3
INTERSTATE ROUTE 481 OVER DEWITT YARDS

CONCRETE PARAPET

DRAWING No. 35 OF 50

DETAILED BY Vince Kozakovich
DETAIL CHECKED BY D Granoff 1/1/68
Rev.: D Smith / Jim Ford

FED. RD. REG. NO.	STATE	FEDERAL AID PROJECT NO.	SHEET NO	TOTAL SHEETS
1	NEW YORK	I-690-3(26) I-481-2(116)	214	309

INTERSTATE ROUTE CONNECTION 570
BUTTERNUT INTERCHANGE (PHASE 2)
ONONDAGA COUNTY

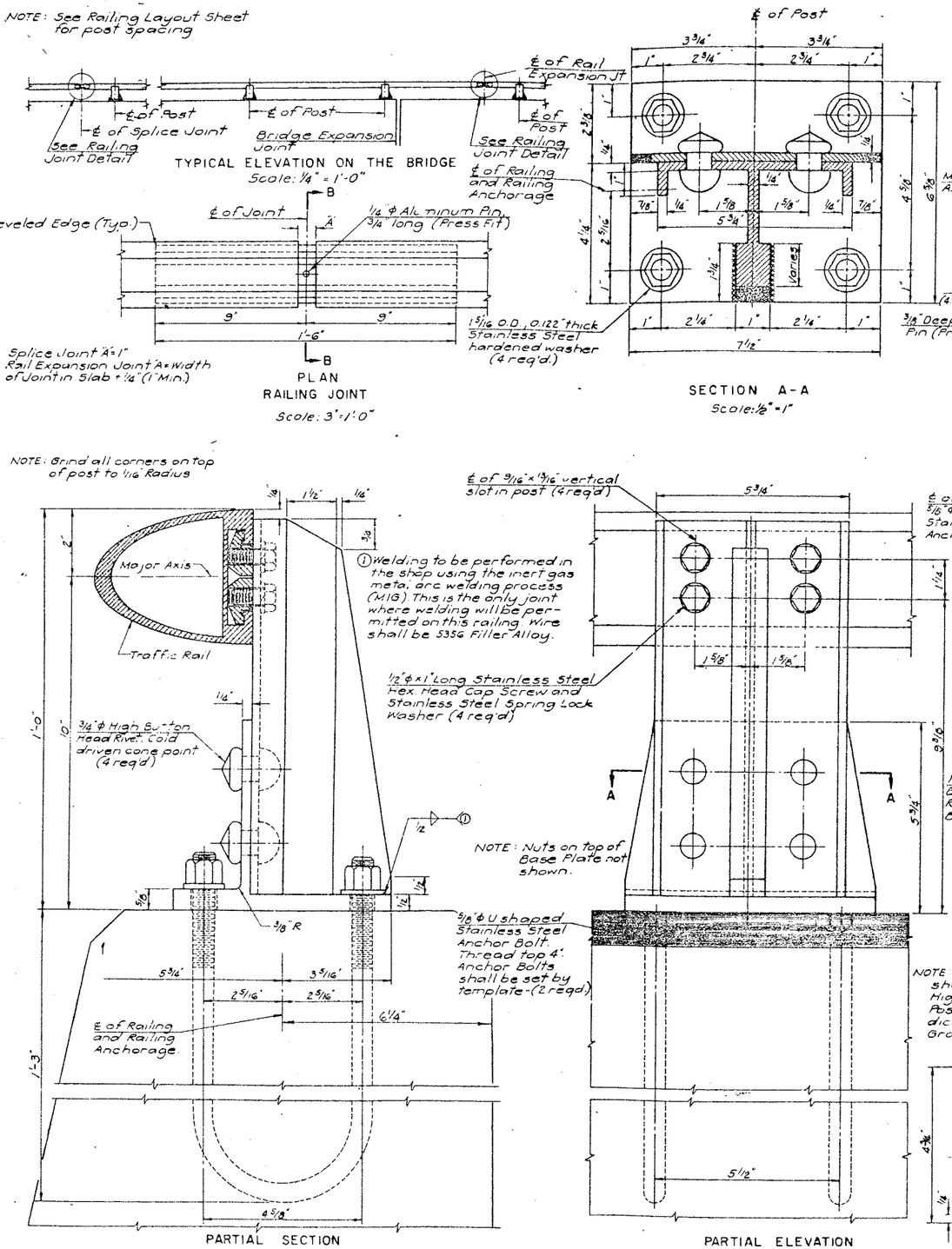

Notes:

All railing is to be fabricated and erected so that the rail is parallel to the parapet.

Since the finished railing must meet all requirements of fit, alignment and grade to the full satisfaction of the Engineer, it is suggested that complete field measurements be made before any shop fabrication is performed.

Aluminum rails, posts, post bases, clamp bars including stainless steel cap screws and lock washers, rail splices, rivets, end caps, pins, rail terminal ends, aluminum caulking compound and any necessary shims and/or pads and steel splice joint assembly between the end of the parapet and the box beam guide railing including tubular rail splice, end splice plate and anchor studs shall be paid for under the railing item.

Anchor bolts, nuts and washers shall be paid for under Item 20

After the anchor bolt nuts have been placed and tightened to the satisfaction of the Engineer, the bolts shall be cut off 1/8 inch above the nut and peened.

Rails shall be continuous over a minimum of three posts. On "U" type wingwalls the rails may be continuous over two posts.

Aluminum rivets shall be cold driven.

Galvanizing shall be done in accordance with Material Specification M19. Bolts to be galvanized shall have a Class 2A thread fit prior to galvanizing.

Materials used in the manufacture of this railing shall conform to the requirements and/or specifications listed below:

Piece	ASTM Designation	Commercial Alloy & Temper
Aluminum Extrusions (Posts, Post bases, rails, rail splices, clamp bars, pins and rail terminal ends)	B221	6061-T6
Aluminum Rivets	B316	6061-T6
Aluminum Plate Shims	B209	1100-0
Aluminum Rail End Caps	B26	43F or 356F
Steel Plate Shims	A36	
Steel Tubular Rail Splices	A500 Grade B or A501	
Steel Splice Plates	A36	
Steel Splice Bolts, Nuts and Washers	A307	
Steel Anchor Studs	A307	
Stainless Steel Anchor Bolts (100,000 psi. Min. Tensile Strength and 80,000 psi. Min. Yield Point)	A193 Grade B8 or A276 Type 304 or A276 Type 430	

Stainless Steel Cap Screws A193 Grade B8
Stainless Steel Spring Lock Washers shall be in accordance with the Military Standard MS35338
Stainless Steel Nuts for Anchor Bolts A 194 Grade 6
Stainless Steel Washers for Anchor Bolts A 167 Type 302 or 304

Design: AASHO Interim Spec-1964

DESIGNED BY R. L. Rathbone	Rev 3	
DETAILED BY C. H. Mahoney	Rev 2	Sn - / V F K - 1/68
DETAIL CHECKED BY Thomas R. Wilson	Rev 1	Changed S.S. Bracket 7/14/66

BRIDGE NO. 2
INTERSTATE ROUTE 481 OVER DEWITT YARDS

ALUMINUM BRIDGE RAILING - I RAIL

F.I.S.H. 70-7

FED. RD. REG. NO.	STATE	FEDERAL AID PROJECT NO.	SHEET NO.	TOTAL SHEETS
1	NEW YORK	I-481-2(11)(2)	215	309

INTERSTATE STATE CONSTRUCTION 570
BUTTERMILK CHANNEL (PHASE 2)
ONONDAGA COUNTY

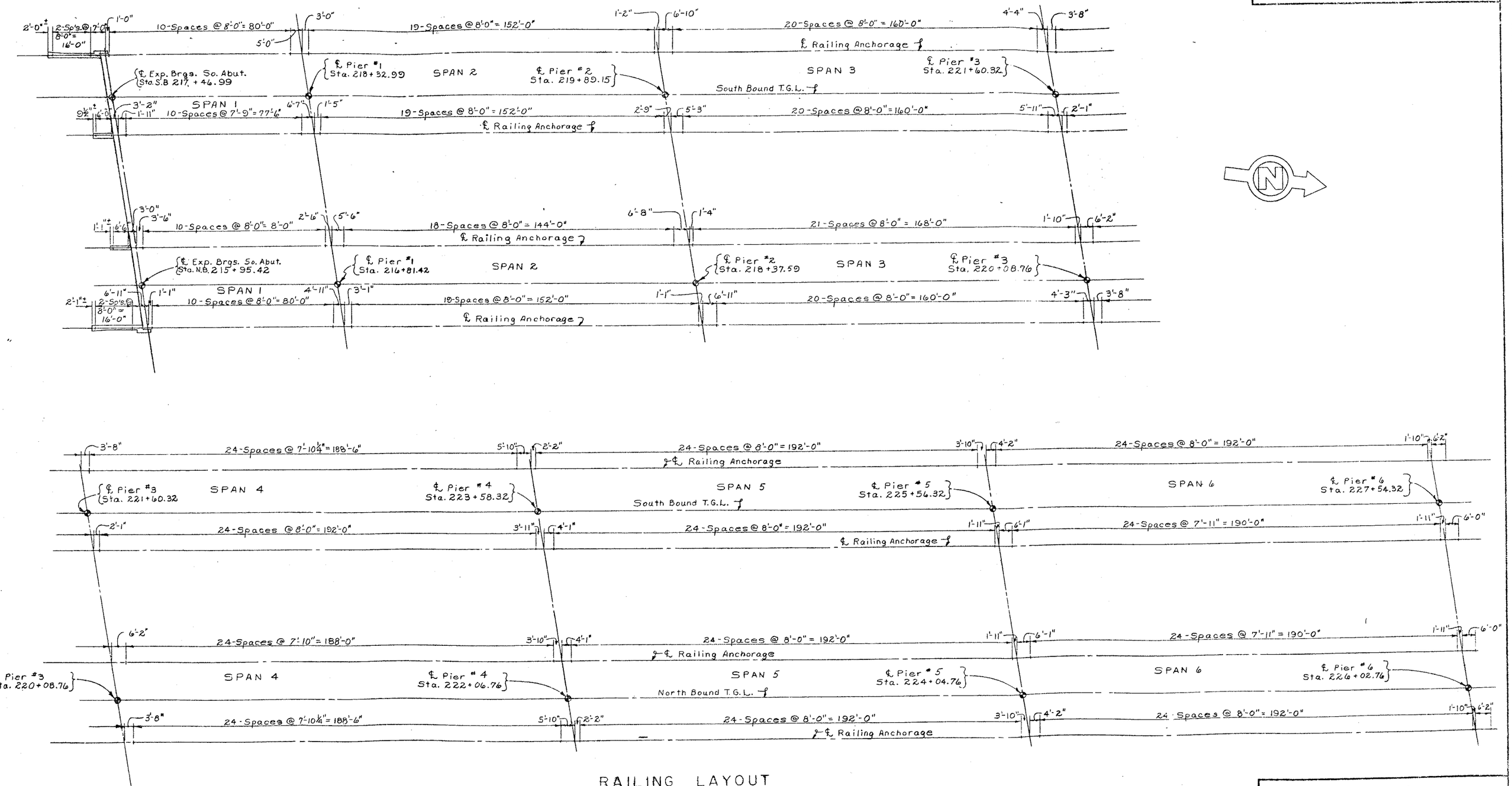

RAILING LAYOUT
Scale: 1" = 20'-0"

PROJECT ENGINEER R. Parker
IN CHARGE OF F. Eckel
DESIGNED BY J. C. Thompson
DESIGN CHECKED BY D. H. Smith
DETAILED BY J. C. Thompson
DETAIL CHECKED BY D.H. Smith

BRIDGE NO. 2
INTERSTATE ROUTE 481 OVER DEWITT YARDS

RAILING LAYOUT

DRAWING NO.

FED. RD. REG. NO.	STATE	FEDERAL AID PROJECT NO.	SHEET NO.	TOTAL SHEETS
1	NEW YORK	I-81-2(23) I-481-2(115)	216	506

INTERSTATE ROUTE CONNECTION 570
BUTTERNUT INTERCHANGE (PHASE 2)
ONONDAGA COUNTY

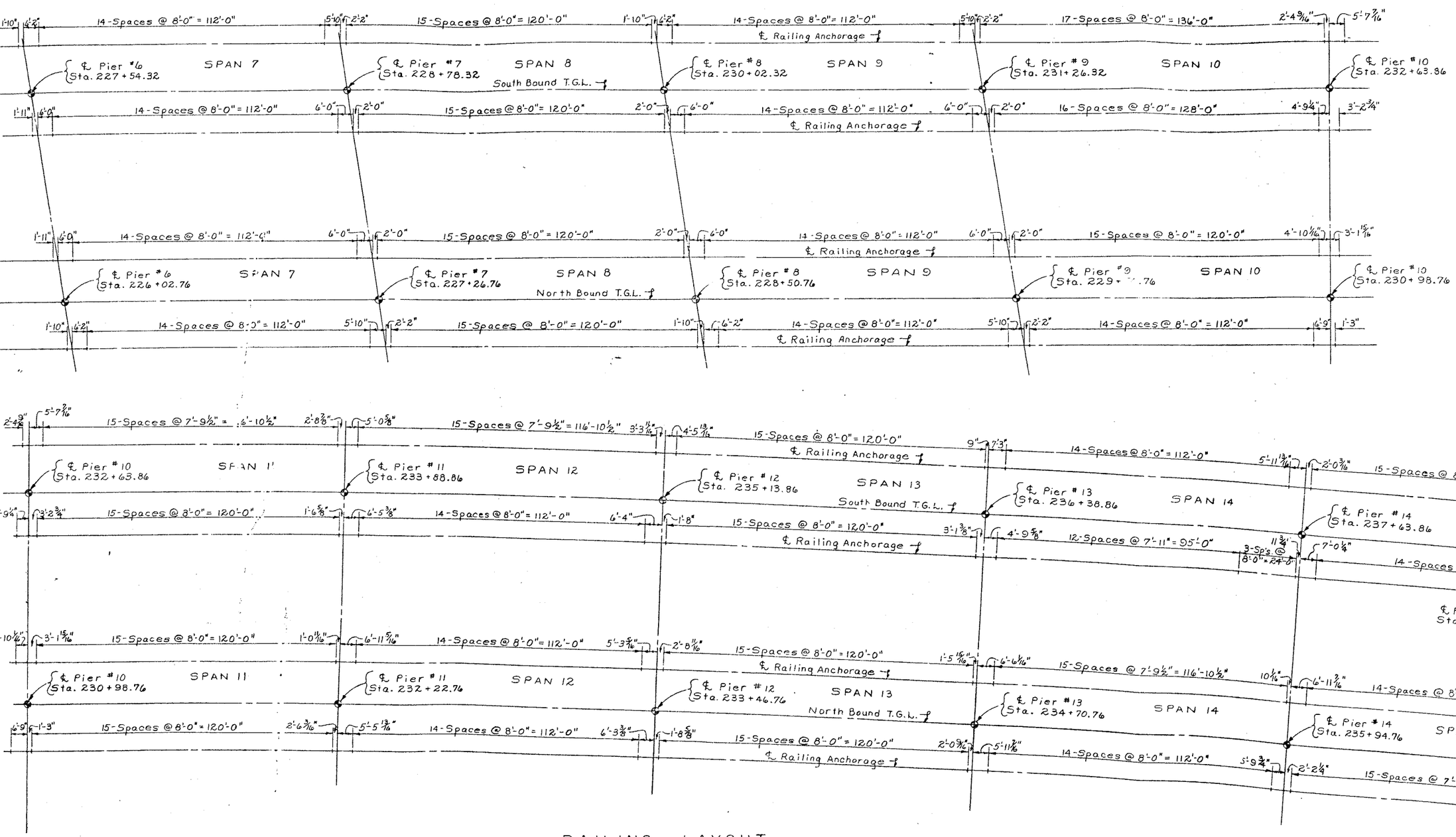

RAILING LAYOUT
Scale: 1" = 20'-0"

PROJECT ENGINEER R. Parker
IN CHARGE OF F. Eckel
DESIGNED BY J.C. Thompson
DESIGN CHECKED BY D.H. Smith
DETAILED BY J.C. Thompson
DETAIL CHECKED BY D.H. Smith

BRIDGE NO. 2
INTERSTATE ROUTE 481 OVER DEWITT YARDS

RAILING LAYOUT

FED. RD. REG. NO.	STATE	FEDERAL AID PROJECT NO.	SHEET NO.	TOTAL SHEETS
1	NEW YORK	I-890-3(25) I-481-2(16)	217	309

INTERSTATE ROUTE CONNECTION 570
BUTTERNUT INTERCHANGE (PHASE 2)
ONONDAGA COUNTY

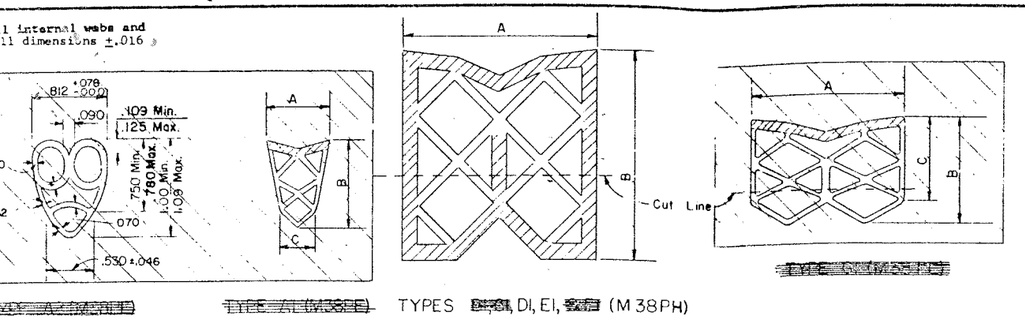

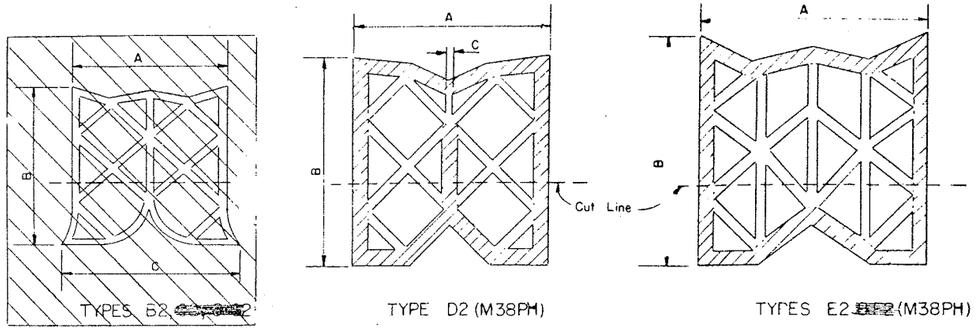

Cross hatched portions of the above details shall be considered as the shell.
Non-cross hatched portions of the above details shall be considered as webs unless a specific dimension is shown.

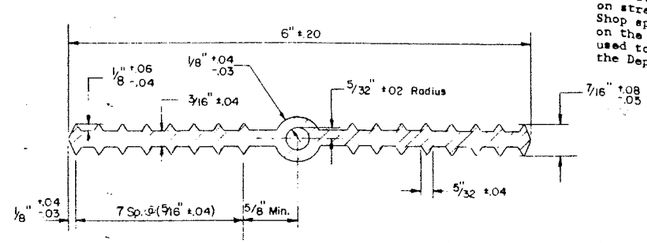

Holes must not be made in waterstop for any purpose.

TYPE A (M38T)

To facilitate shipping and handling of PVC Waterstops, field butt splices will be permitted on straight runs at points approved by the Engineer. Shop splices shall be used at the locations shown on the Contract Plans. The method and equipment used to make the field splice must be approved by the Deputy Chief Engineer (Design).

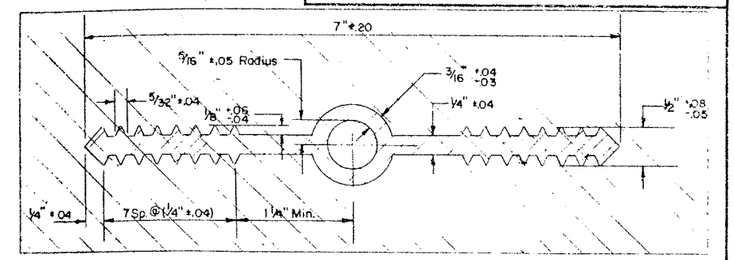

~~Holes must not be made in waterstop for any purpose.~~

~~TYPE B (M38T)~~

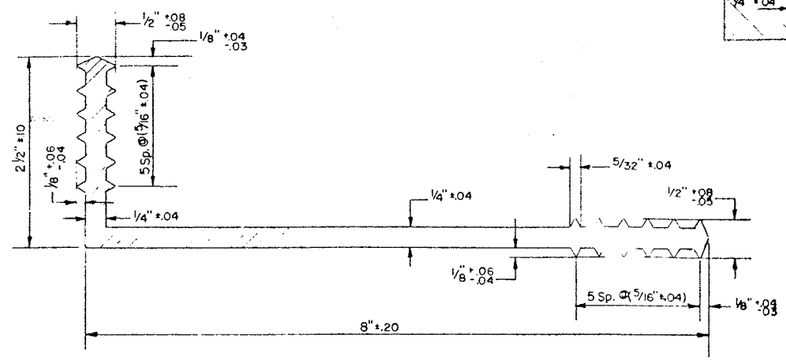

Holes must not be made in waterstop for any purpose.

TYPE CA (M38T)

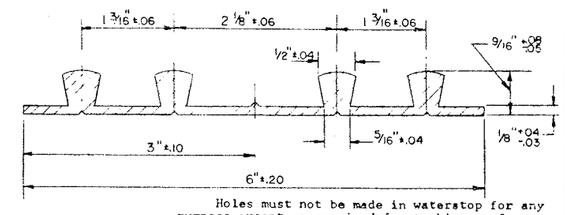

Holes must not be made in waterstop for any purpose except as required for tacking to forms.
Tacking to forms will only be permitted in the area between the outside ribs and the edges of waterstop.
Type D waterstop shall be light gray in color

TYPE D (M38T)

DIMENSIONS FOR PREFORMED ELASTIC JOINT SEALER					
TYPES	A	B	C	THICKNESS	
				SHELL	WEBS
~~A1~~	~~1 3/16" ±.06~~	~~1 1/8" ±.05~~	~~7/16" ±.04~~	~~3/32" ±.02~~	~~3/64" +.02,-.01~~
~~A2~~					
~~B1~~	~~3/4" +.25,-.00~~	~~2" ±.13~~		~~1/8" +.03,-.02~~	~~3/32" +.02,-.03~~
~~B2~~	~~3/4" +.25,-.00~~	~~1 3/4" ±.13~~	~~2" ±.19~~		~~5/64" +.03,-.02~~
~~C1~~	~~2" ±.13~~	~~1 13/16" ±.13~~	~~2 1/4" ±.19~~	~~1/8" +.03,-.02~~	~~3/32" +.03,-.02~~
~~C2~~	~~2" ±.13,-.00~~	~~2" ±.13~~	~~2 1/4" ±.19~~		~~5/32" +.03,-.02~~
D1	2 1/2" +.25,-.00	2 3/4" ±.13		3/16" +.04,-.03	3/32" +.03,-.02
D2	2 1/2" +.25,-.00	2 3/4" ±.13	3/64" +.03,-.02	3/16" +.04,-.03	3/32" +.03,-.02
E1	3" +.25,-.00	3 13/32" ±.19		3/16" +.04,-.03	1/8" +.04,-.03
E2	3" +.25,-.00	3" ±.19		3/16" +.04,-.03	1/8" +.04,-.03
~~F1~~	~~4" +.31,-.00~~	~~4 25/32" ±.25~~		~~1/8" +.04,-.03~~	~~3/16" +.04,-.03~~
~~F2~~	~~4" +.31,-.00~~	~~4" ±.25~~		~~3/16" +.04,-.03~~	~~1/8" +.04,-.03~~
~~G1~~	~~1 5/8" ±.13,-.00~~	~~1 3/8" ±.06~~	~~1 1/16" ±.06~~	~~7/32" ±.02~~	~~5/64" ±.02~~
~~G2~~	~~1 5/8" ±.13,-.00~~	~~1 1/8" ±.13~~	~~1 3/8" ±.13~~		~~5/64" ±.02~~

Any changes in the shape or dimensions of preformed elastic joint sealer must be approved by the Deputy Chief Engineer, (Design). The minimum thickness of any web shall not be less than as specified. The average thickness of all webs shall be within the tolerances specified.

Joints which are to be sealed with preformed elastic joint sealers shall be sealed before the structure is opened to traffic, including construction traffic, and before discontinuing operation when work is suspended during the Winter. The joints shall be thoroughly cleaned, using whatever equipment or method is necessary and when they are free of foreign material, M38PH Sealer shall be installed by suitable hand or machine tools and thoroughly secured in place with the lubricant which shall cover both sides of the sealer over the full area in contact with the sides of the joint. The sealer shall be installed in a compressed condition at the depth shown on the contract plans.

The sealer shall be supplied in one piece for the full width of each joint. Splices will not be permitted when the length of this piece is less than 50 feet. ~~For lengths of 50 to 100 feet, one splice will be permitted. The lengths in excess of 100 feet thereafter may be placed at approximately 70 foot intervals.~~

~~Crossings with a longitudinal expansion joint, the transverse sealers shall be placed in one piece for the full length of the sealer but be joined in one piece between the transverse sealers. Joints between the transverse and longitudinal sealers shall be sealed with lubricant.~~

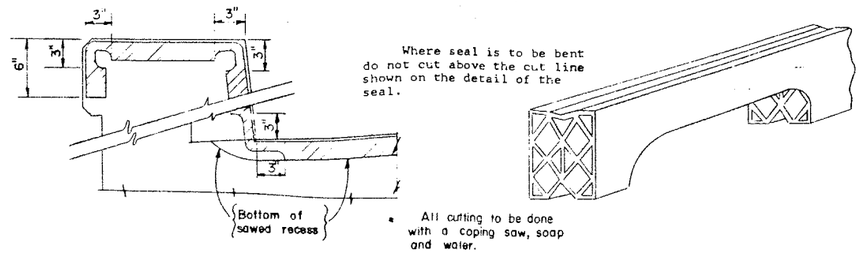

DETAIL FOR CUTTING AND BENDING SEAL (M38PH)

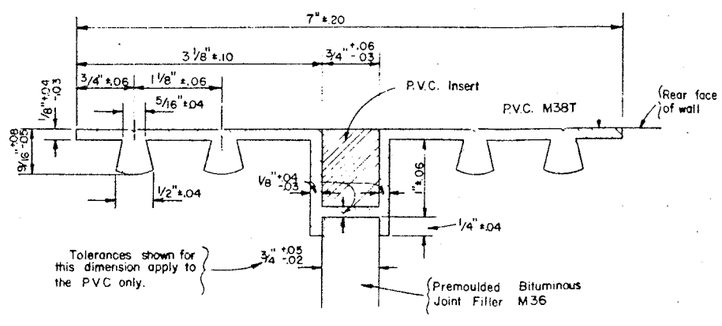

TYPE E

PVC Insert:
Closed cell polyvinyl chloride (SP) Grade VE-45W as per ASTM D1667. Color shall be light gray.
Density shall be a min. of 3 lbs. and a max. of 5 lbs. per cubic foot.
Material shall be sampled as and at the same time as the M3CT. The sides of the PVC Insert shall be bonded to the waterstop at the factory.

Holes must not be made in waterstop for any purpose except as required for tacking to forms.
Tacking to forms will only be permitted in the area between the outside ribs and the edges of waterstop.
Type E waterstop shall be light gray in color.

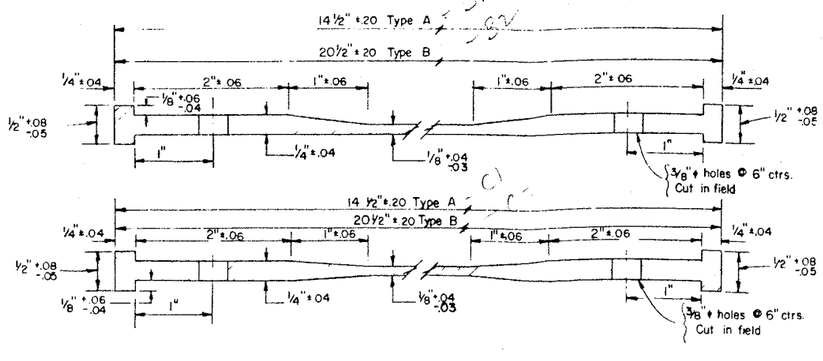

One longitudinal shop splice will be permitted in the fabrication of the Type B Trough.
PVC trough to be paid for under Item 101B.

TYPES A & B PVC TROUGHS (M38T)
EITHER SHAPE MAY BE USED

PROJECT ENGINEER
CHARGE OF
DESIGNED BY
DESIGN CHECKED BY
DETAILED BY Vincent Kozakevich
DETAIL CHECKED BY D. Granoff 7/11/67

Revised: 10/67

BRIDGE NO. 2
INTERSTATE ROUTE 481 OVER DEWITT YARDS

PREFORMED ELASTIC JOINT SEALER
PVC WATERSTOPS AND PVC TROUGHS

DRAWING NO. [illegible] OF 50

FED. RD. REG. NO.	STATE	FEDERAL AID PROJECT NO.	SHEET NO.	TOTAL SHEETS
1	NEW YORK	I-500-3(26) I-81-2(16)	218	309

INTERSTATE ROUTE CONNECTION 570
BUTTERNUT PARKWAY (PHASE 2)
ONONDAGA COUNTY

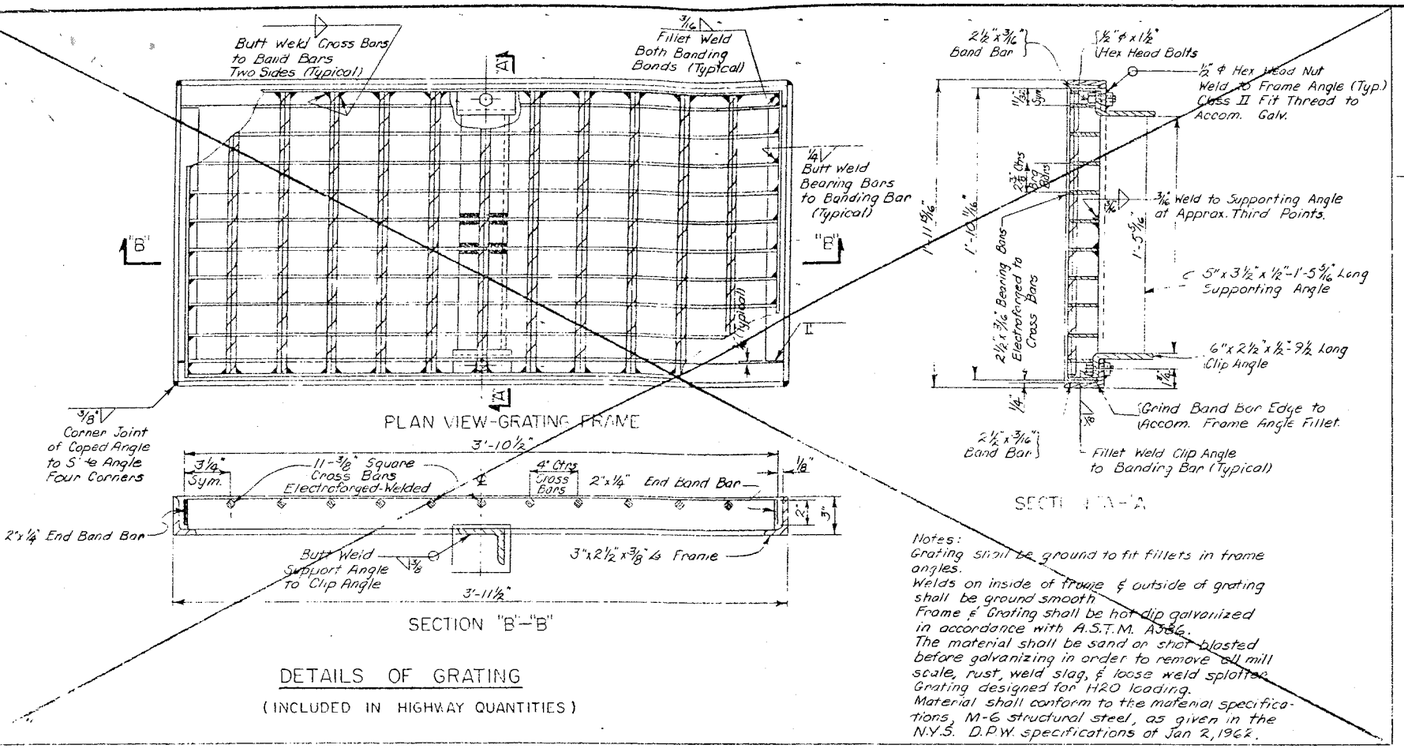

Notes:
Grating shall be ground to fit fillets in frame angles.
Welds on inside of frame & outside of grating shall be ground smooth.
Frame & Grating shall be hot dip galvanized in accordance with A.S.T.M. A386.
The material shall be sand or shot blasted before galvanizing in order to remove all mill scale, rust, weld slag, & loose weld spatter.
Grating designed for H20 loading.
Material shall conform to the material specifications, M-6 structural steel, as given in the N.Y.S. D.P.W. specifications of Jan 2, 1962.

DETAILS OF GRATING
(INCLUDED IN HIGHWAY QUANTITIES)

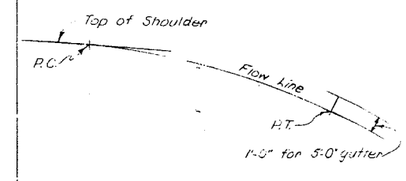

FLOW LINE PROFILE

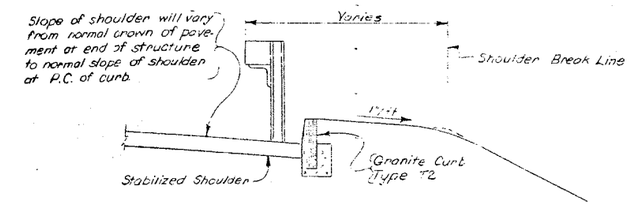

SECTION A-A
Not to Scale

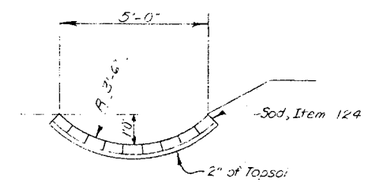

SECTION "HPU GUTTER
Scale: 3/8" = 1'-0"

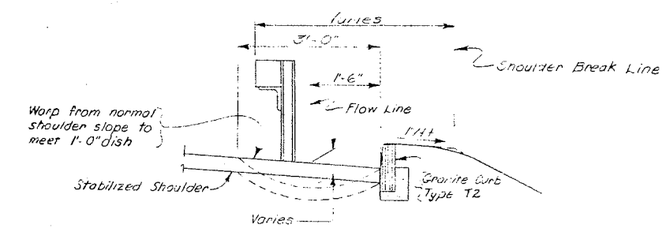

SECTION B-B
Not to Scale

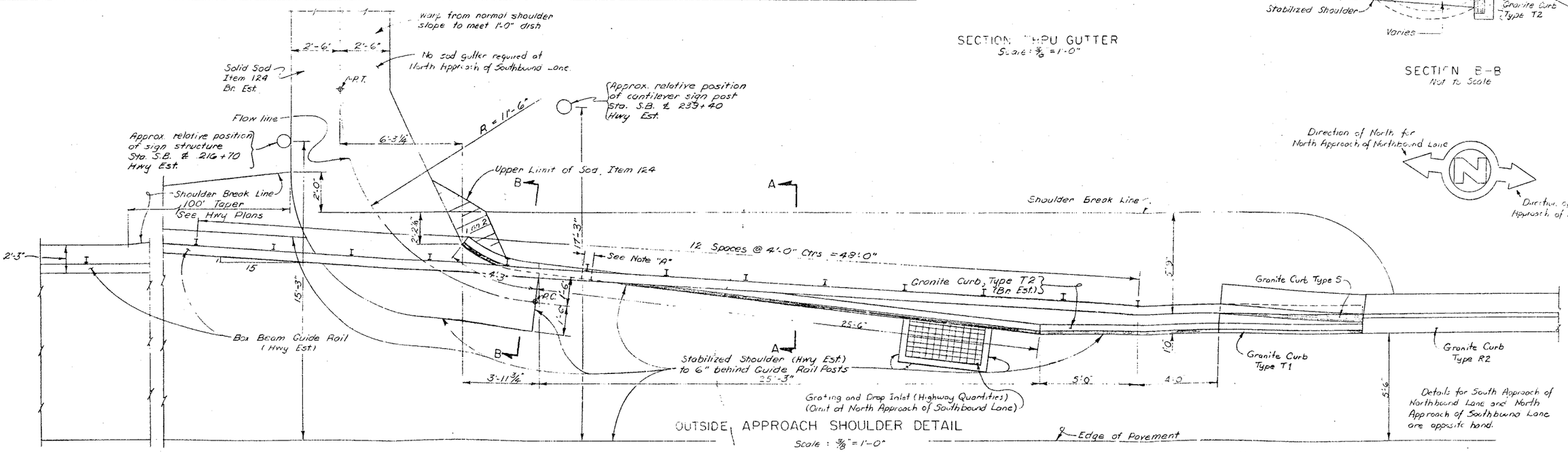

OUTSIDE APPROACH SHOULDER DETAIL
Scale: 3/8" = 1'-0"

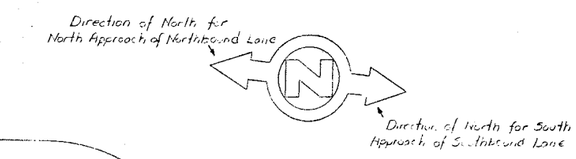

Details for South Approach of Northbound Lane and North Approach of Southbound Lane are opposite hand.

Note "A" - 6" min. gap in granite curb to be filled with mortar after guide rail post has been set. This filled in portion shall be paid for at the unit price bid for the adjacent granite curb.

Grating and Drop Inlet to be included in the Hwy Est.

All sod to be included in the Bridge Estimate.

PROJECT ENGINEER E. PAGLIA
IN CHARGE OF L. E. SHERMAN
DESIGNED BY
DESIGN CHECKED BY
DETAILED BY
DETAIL CHECKED BY

BRIDGE NO. 2
INTERSTATE ROUTE 481 OVER DEWITT YARDS

DRAINAGE DETAILS
DRAWING NO. 40 OF 50

FED. RD. REG. NO.	STATE	FEDERAL AID PROJECT NO.	SHEET NO.	TOTAL SHEETS
1	NEW YORK	I-690-3 (26) I-481-2(116)	219	309

INTERSTATE ROUTE CONNECTION 570
BUTTERNUT INTERCHANGE (PHASE 2)
ONONDAGA COUNTY

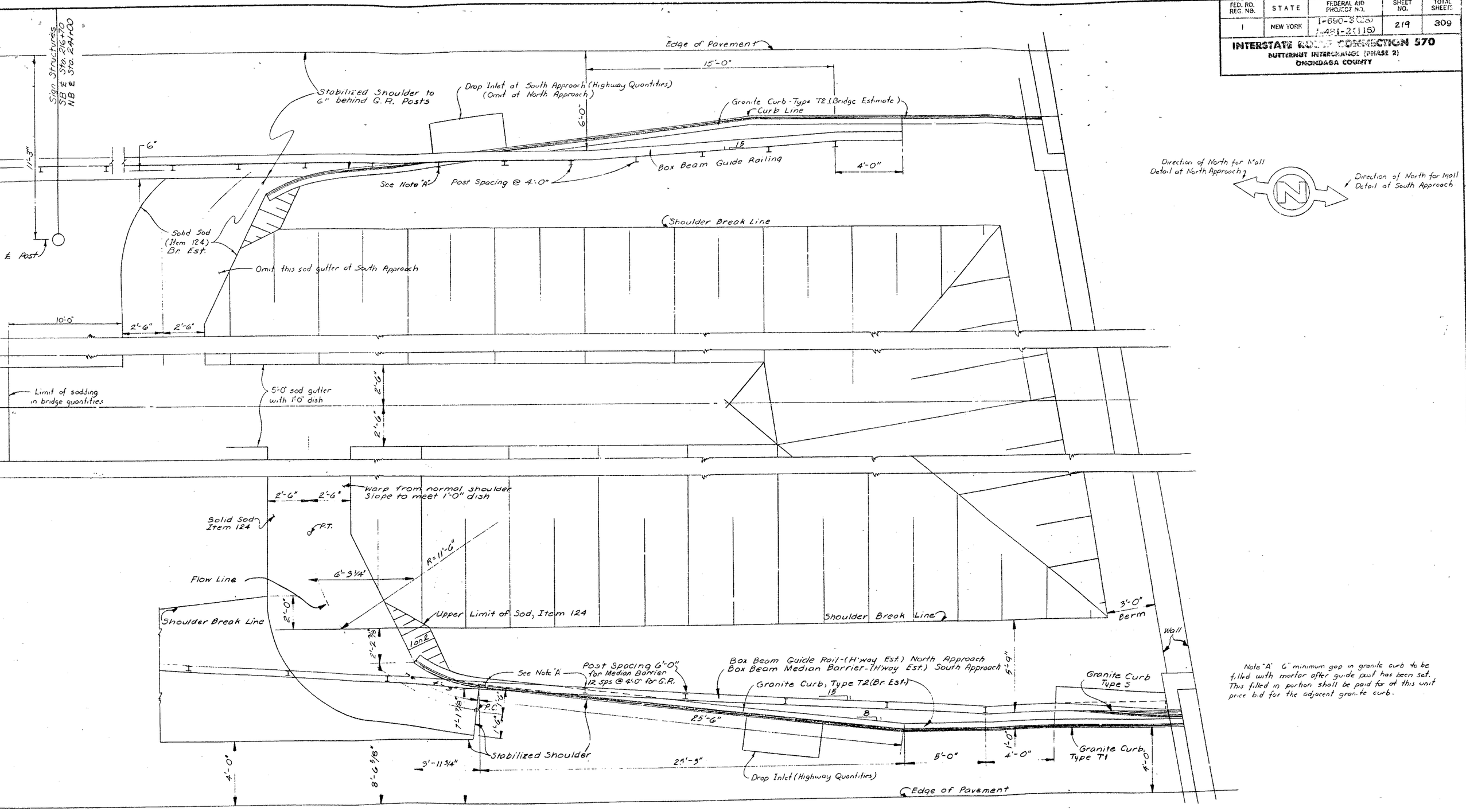

Note "A" 6" minimum gap in granite curb to be filled with mortar after guide post has been set. This filled in portion shall be paid for at this unit price bid for the adjacent granite curb.

MALL APPROACH SHOULDER DETAILS

SCALE: 3/8"=1'-0"

PROJECT ENGINEER	R. Parker
IN CHARGE OF	F.W. Eckel
DESIGNED BY	
DESIGN CHECKED BY	
DETAILED BY	N.T. Colbert
DETAIL CHECKED BY	F.W. Eckel

BRIDGE NO. 2
INTERSTATE ROUTE 481 OVER DEWITT YARDS

MALL APPROACH SHOULDER DETAILS

DRAWING NO. 41 OF 50

FED. RD. REG. NO.	STATE	FEDERAL AID PROJECT NO.	SHEET NO.	TOTAL SHEETS
1	NEW YORK	~~I-599-2(123)~~ I-481-2(116)	220	806

INTERSTATE ROUTE CONNECTION 570
BUTTERNUT INTERCHANGE (PHASE 2)
ONONDAGA COUNTY

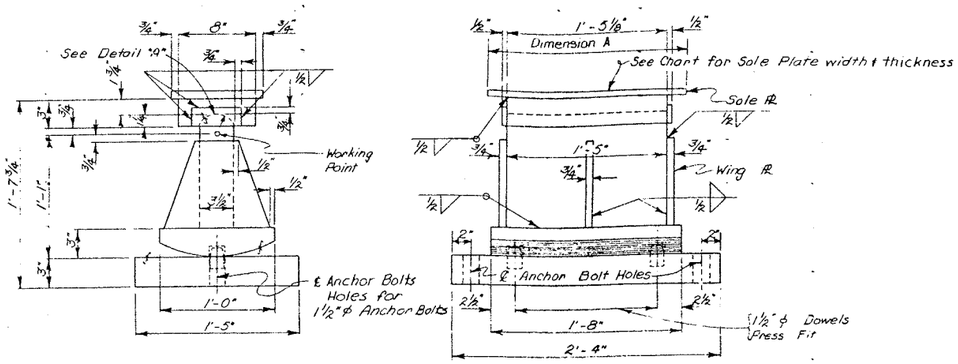

EXPANSION BEARING - TYPE II
Scale: 1½"=1'-0"

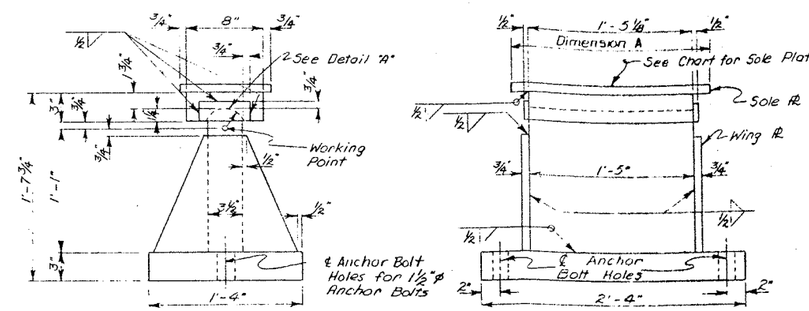

FIXED BEARING - TYPE II
Scale: 1½"=1'-0"

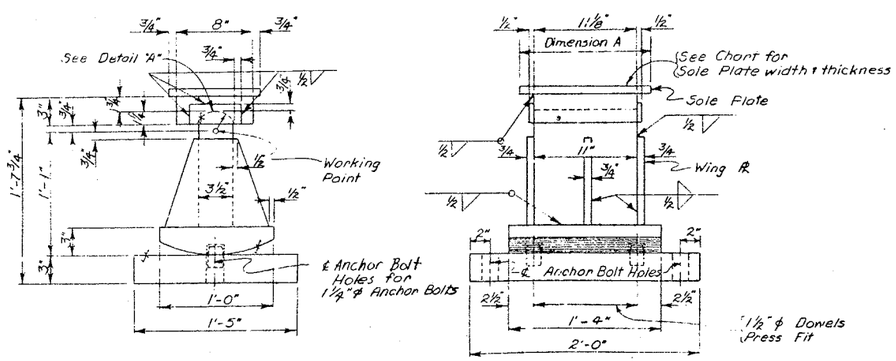

EXPANSION BEARING - TYPE I
Scale: 1½"=1'-0"

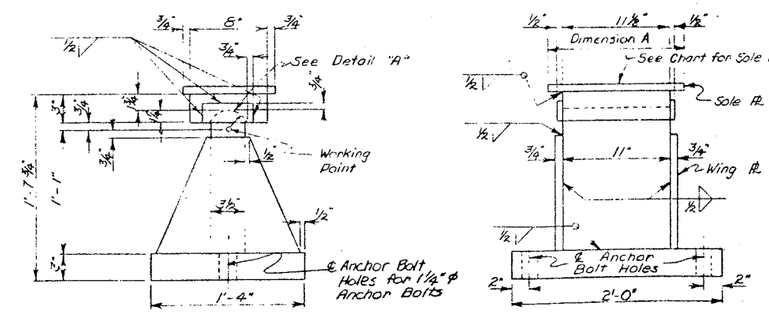

FIXED BEARING - TYPE I
Scale: 1½"=1'-0"

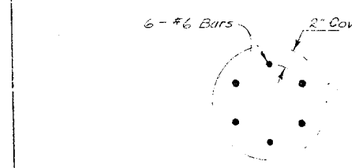

SECTION D-D
Scale: 1½"=1'-0"

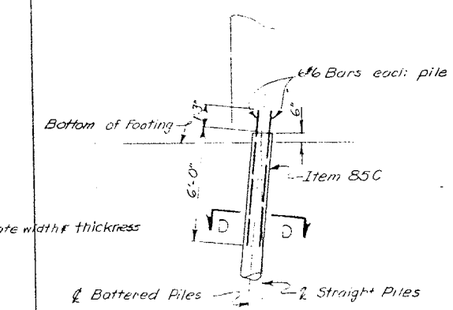

PILE ELEVATION
Scale: ¼"=1'-0"

CAST-IN-PLACE CONCRETE PILES ITEM 85C

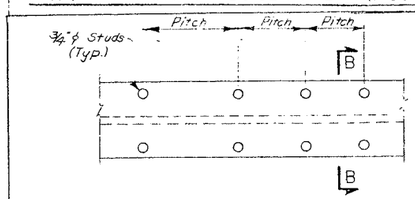

PARTIAL PLAN OF STUDS
Scale: None

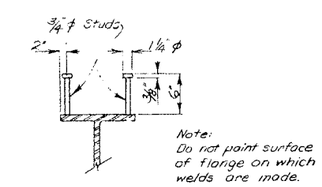

SECTION B-B
Scale: None

STUD SHEAR CONNECTORS ITEM 28B

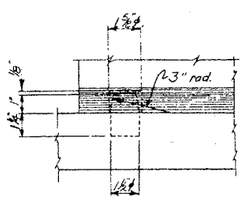

DETAIL OF DOWEL
Scale: 3" = 1'-0"

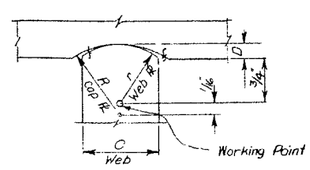

Bearing Type	R	r	C	D
Type I	2 1/16"	2"	3½"	1¼"
Type II	2 1/16"	2"	3½"	1¼"
Type III	2 1/16"	2"	3 1/2"	1⅛"

DETAIL A
No Scale

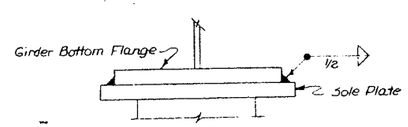

TYPICAL SOLE PLATE TO GIRDER CONNECTION DETAIL
No Scale

PROJECT ENGINEER R. Parker
IN CHARGE OF F. Eckel
DESIGNED BY
DESIGN CHECKED BY
DETAILED BY J. Dussault
DETAIL CHECKED BY H.G. Tepper

BRIDGE NO. 2
INTERSTATE ROUTE 481 OVER DEWITT YARDS

BEARINGS

DRAWING NO. 42 OF 50

FED. RD. REG. NO.	STATE	FEDERAL AID PROJECT NO	SHEET NO.	TOTAL SHEETS
1	NEW YORK	I-481-2(13) 1-481-2(16)	221	309

INTERSTATE ROUTE CONNECTION 570
BUTTERNUT INTERCHANGE (PHASE 2)
ONONDAGA COUNTY

Note: See Miscellaneous Drawing #42 for Detail "A" & for Detail of Dowels.

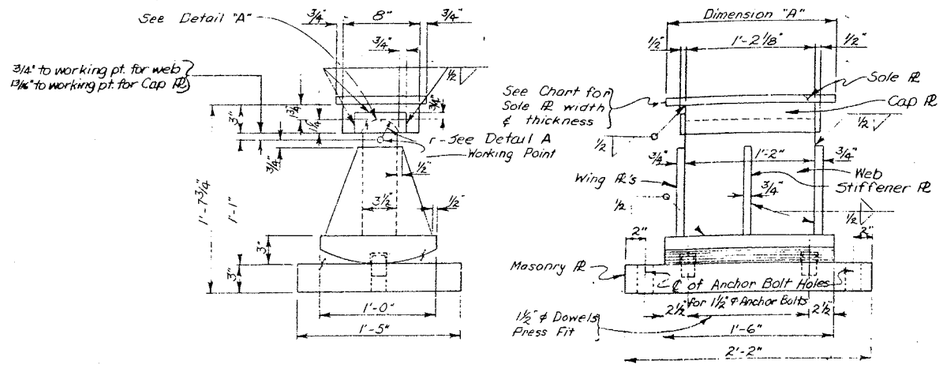

EXPANSION BEARING – TYPE III
Scale: 1½" = 1'-0"

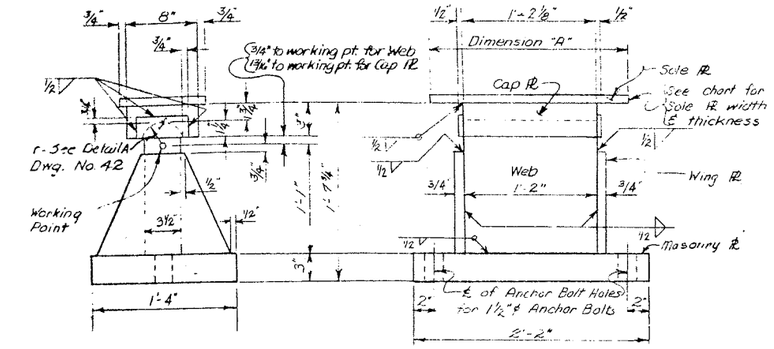

FIXED BEARING – TYPE III
Scale: 1½" = 1'-0"

BEARING SCHEDULE
SOUTHBOUND LANE

SPAN	GIRDER	BEARING TYPE EXP	BEARING TYPE FIXED	SOLE PL DIM "A"	SOLE PL THICKNESS EXP	SOLE PL THICKNESS FIXED
1	1	I	I	1'-2"	3/4	3/4
	2	I	I	1'-7"	3/4	3/4
	3	I	I	1'-7"	3/4	3/4
	4	I	I	1'-2"	3/4	3/4
2	1	III	III	1'-11"	7/8	3/4
	2	III	III	1'-11"	7/8	3/4
	3	III	III	1'-11"	7/8	3/4
	4	III	III	1'-11"	7/8	3/4
3	1	III	III	2'-6"	3/4	3/4
	2	III	III	2'-4"	3/4	3/4
	3	III	III	2'-4"	3/4	3/4
	4	III	III	2'-6"	3/4	3/4
4	1	II	II	2'-8"	3/4	3/4
	2	II	II	2'-2"	1	3/4
	3	II	II	2'-2"	1	3/4
	4	II	II	2'-8"	1	3/4
5	1	II	II	2'-8"	3/4	7/8
	2	II	II	2'-2"	3/4	7/8
	3	II	II	2'-2"	3/4	7/8
	4	II	II	2'-8"	3/4	7/8
6	1	II	II	2'-8"	3/4	3/4
	2	II	II	2'-2"	3/4	1
	3	II	II	2'-2"	3/4	1
	4	II	II	2'-8"	3/4	3/4
7	1	II	I	1'-8"	3/4	1
	2	I	I	2'-0"	3/4	1
	3	I	I	2'-0"	3/4	1
	4	II	I	1'-8"	3/4	1
8	1	I	I	2'-1"	3/4	1
	2	I	I	2'-0"	3/4	1
	3	I	I	2'-0"	3/4	1
	4	I	I	2'-1"	3/4	1
9	1	I	I	2'-1"	3/4	1
	2	I	I	2'-0"	3/4	1
	3	I	I	2'-0"	3/4	1 1/8
	4	I	I	2'-1"	3/4	1 1/8
10	1	I	I	2'-2"	3/4	1 1/8
	2	I	I	2'-2"	3/4	1 1/8
	3	I	I	2'-2"	3/4	1 1/8
	4	I	I	2'-2"	3/4	1 1/8
11	1	I	I	2'-1"	3/4	1 1/4
	2	I	I	2'-0"	3/4	1 1/4
	3	I	I	2'-0"	3/4	1 1/4
	4	I	I	2'-1"	3/4	1 1/4
12	1	I	I	2'-1"	3/4	1 1/4
	2	I	I	2'-0"	3/4	1 1/4
	3	I	I	2'-0"	3/4	1 1/4
	4	I	I	2'-1"	3/4	1 1/4
13	1	I	I	2'-1"	3/4	1 1/4
	2	I	I	2'-0"	3/4	1 1/4
	3	I	I	2'-0"	3/4	1 1/4
	4	I	I	2'-1"	3/4	1 1/4
14	1	I	I	2'-1"	3/4	1 1/4
	2	I	I	2'-0"	3/4	1 1/4
	3	I	I	2'-0"	3/4	1 1/4
	4	I	I	2'-1"	3/4	1 1/4
15	1	I	I	2'-1"	3/4	3/4
	2	I	I	2'-0"	3/4	3/4
	3	I	I	2'-0"	3/4	3/4
	4	I	I	2'-1"	3/4	3/4

BEARING SCHEDULE
NORTHBOUND LANE

SPAN	GIRDER	BEARING TYPE EXP	BEARING TYPE FIXED	SOLE PL DIM "A"	SOLE PL THICKNESS EXP	SOLE PL THICKNESS FIXED
1	1	I	I	1'-2"	3/4	3/4
	2	I	I	1'-7"	3/4	3/4
	3	I	I	1'-7"	3/4	3/4
	4	I	I	1'-2"	3/4	3/4
2	1	III	III	1'-11"	7/8	3/4
	2	III	III	1'-11"	7/8	3/4
	3	III	III	1'-11"	7/8	3/4
	4	III	III	1'-11"	7/8	3/4
3	1	III	III	2'-6"	3/4	3/4
	2	III	III	2'-4"	3/4	3/4
	3	III	III	2'-4"	3/4	3/4
	4	III	III	2'-6"	3/4	3/4
4	1	II	II	2'-8"	3/4	3/4
	2	II	II	2'-2"	1	3/4
	3	II	II	2'-2"	1	3/4
	4	II	II	2'-8"	3/4	3/4
5	1	II	II	2'-8"	3/4	7/8
	2	II	II	2'-2"	3/4	7/8
	3	II	II	2'-2"	3/4	7/8
	4	II	II	2'-8"	3/4	7/8
6	1	II	II	2'-8"	3/4	3/4
	2	II	II	2'-2"	3/4	1
	3	II	II	2'-2"	3/4	1
	4	II	II	2'-8"	3/4	3/4
7	1	II	I	1'-8"	3/4	1
	2	I	I	2'-0"	3/4	1
	3	I	I	2'-0"	3/4	1
	4	II	I	1'-8"	3/4	1
8	1	I	I	2'-1"	3/4	1
	2	I	I	2'-0"	3/4	1
	3	I	I	2'-0"	3/4	1
	4	I	I	2'-1"	3/4	1
9	1	I	I	2'-1"	3/4	1
	2	I	I	2'-0"	3/4	1 1/8
	3	I	I	2'-0"	3/4	1 1/8
	4	I	I	2'-1"	3/4	1 1/8
10	1	I	I	2'-1"	3/4	1 1/8
	2	I	I	2'-0"	3/4	1 1/8
	3	I	I	2'-0"	3/4	1 1/8
	4	I	I	2'-1"	3/4	1 1/8
11	1	I	I	2'-1"	3/4	1 1/4
	2	I	I	2'-0"	3/4	1 1/8
	3	I	I	2'-0"	3/4	1 1/4
	4	I	I	2'-1"	3/4	1 1/4
12	1	I	I	2'-1"	3/4	1 1/4
	2	I	I	2'-0"	3/4	1 1/4
	3	I	I	2'-0"	3/4	1 1/4
	4	I	I	2'-1"	3/4	1 1/4
13	1	I	I	2'-1"	3/4	1 1/4
	2	I	I	2'-0"	3/4	1 1/4
	3	I	I	2'-0"	3/4	1 1/4
	4	I	I	2'-1"	3/4	1 1/4
14	1	I	I	2'-1"	3/4	1 1/4
	2	I	I	2'-0"	3/4	1 1/4
	3	I	I	2'-0"	3/4	1 1/4
	4	I	I	2'-1"	3/4	1 1/4
15	1	I	I	2'-1"	3/4	3/4
	2	I	I	2'-0"	3/4	3/4
	3	I	I	2'-0"	3/4	3/4
	4	I	I	2'-1"	3/4	3/4

PROJECT ENGINEER R. PARKER
IN CHARGE OF J. B. SHERMAN
DESIGNED BY
DESIGN CHECKED BY
DETAILED BY J. DURRANT
DETAIL CHECKED BY M. G. Koppocw

BRIDGE NO. 2
INTERSTATE ROUTE 481 OVER DEWITT YARDS

BEARINGS

DRAWING NO. 43 OF 50

F.I.S.H. 70-7

FED. RD. REG. NO.	STATE	FEDERAL AID PROJECT NO.	SHEET NO.	TOTAL SHEETS
1	N.Y.	I-090-3(28) I-481-2(116)	222	309

INTERSTATE ROUTE CONNECTION 570
BUTTERNUT INTERCHANGE (PHASE 2)
ONONDAGA COUNTY

Note: For Pier No1 see Sheet No.47

PIER 2 NORTHBOUND

MARK	SIZE	NO.	LENGTH	TYPE	A	B	C	D	E	F	G	LOCATION
	5	19	42'-6"	Str.								Longitudinal top & bottom footing.
	5	29	11'-6"	Str.								Transverse top footing.
	7	80	11'-6"	Str.								Transverse bottom footing.
	8	90	4'-6"	Str.								Vertical footings to plinth.
	5	72	2'-10"	Str.								Vertical footings to plinth.
	8	90	25'-3"	Str.								Vertical plinth to cap beam.
	5	72	10'-0"	Str.								Vertical plinth.
	5	20	35'-0"	Str.								Longitudinal in plinth.
	4	36	12'-1"	V	11'-6⅜"	3'-8"	4½"					Hoops in columns.
	11	7	9'-2"	Str.								Longitudinal top of beam.
	11	2	41'-6"	XI	30'-9"	1'-8"	3'-8¾"	2'-5"				Longitudinal top of beam.
	11	2	45'-6"	XI	34'-9"	1'-8"	3'-8¾"	2'-5"				Longitudinal top of beam.
	4	4	9'-2"	Str.								Longitudinal top of beam.
	11	8	8'-1"	Str.								Longitudinal bottom of beam.
	11	2	36'-1"	Str.								Longitudinal bottom of beam.
	11	2	39'-9"	Str.								Longitudinal bottom of beam.
	5	42	3'-8"	III	3'-1"	7"	5"	5"				Vertical dowel beam to pedestal.
	6	6	16'-4"	IX	4'-2"	3'-8"	6¾"	6½"				Hoops in pedestals (interior).
	6	6	17'-6"	VI	3'-8"	5'-9"	1'-10"	3'-8"	6¾"	6½"		Hoops in pedestals (exterior)
	5	8	36'-1"	Str.								Longitudinal in sides of beam.
	5	84	16'-3"	IX	3'-8"	4'-2"	5¾"	5½"				Vertical stirrups in beams.
	5	14	11'-11"	XIII	3'-1"	3'-1"	5'-9"	1'-10"				Beam end hoop.
	6	336	7'-3"	Str.								Pile reinforcement.
	5	7	3'-8"	Str.								Transverse top of beam.
	8	8	36'-1"	Str.								Longitudinal top crashwall.
	5	36	3'-8"	Str.								Transverse top crashwall.

PIER 2 SOUTHBOUND

MARK	SIZE	NO.	LENGTH	TYPE	A	B	C	D	E	F	G	LOCATION
	5	19	42'-6"	Str.								Longitudinal top & bottom footing.
	5	29	11'-6"	Str.								Transverse top footing.
	7	80	11'-6"	Str.								Transverse bottom footing.
	8	90	4'-6"	Str.								Vertical footings to plinth.
	5	72	2'-10"	Str.								Vertical footings to plinth.
	8	90	25'-3"	Str.								Vertical plinth to cap beam.
	5	72	10'-0"	Str.								Vertical plinth.
	5	20	35'-0"	Str.								Longitudinal in plinth.
	4	36	12'-1"	V	11'-6⅜"	3'-8"	4½"					Hoops in columns.
	11	7	9'-2"	Str.								Longitudinal top of beam.
	11	2	41'-6"	XI	30'-9"	1'-8"	3'-8¾"	2'-5"				Longitudinal top of beam.
	11	2	45'-6"	XI	34'-9"	1'-8"	3'-8¾"	2'-5"				Longitudinal top of beam.
	4	4	9'-2"	Str.								Longitudinal top of beam.
	11	8	8'-1"	Str.								Longitudinal bottom of beam.
	11	2	36'-1"	Str.								Longitudinal bottom of beam.
	11	2	39'-9"	Str.								Longitudinal bottom of beam.
	5	42	3'-7"	III	3'-0"	7"	5"	5"				Vertical dowel beam to pedestal.
	6	6	16'-4"	IX	4'-2"	3'-8"	6¾"	6½"				Hoops in pedestals (interior).
	6	6	17'-6"	VI	3'-8"	5'-9"	1'-10"	3'-8"	6¾"	6½"		Hoops in pedestals (exterior).
	5	8	36'-1"	Str.								Longitudinal in sides of beam.
	5	84	16'-3"	IX	3'-8"	4'-2"	5¾"	5½"				Vertical stirrups in beams.
	5	14	11'-11"	XIII	3'-1"	3'-1"	5'-9"	1'-10"				Beam end hoop.
	6	336	7'-3"	Str.								Pile reinforcement.
	5	7	3'-8"	Str.								Transverse top of beam.
	8	8	36'-1"	Str.								Longitudinal top crashwall.
	5	36	3'-8"	Str.								Transverse top crashwall.

PIER 3 NORTHBOUND

MARK	SIZE	NO.	LENGTH	TYPE	A	B	C	D	E	F	G	LOCATION
	5	19	42'-6"	Str.								Longitudinal top & bottom footing.
	5	29	11'-6"	Str.								Transverse top footing.
	7	80	11'-6"	Str.								Transverse bottom footing.
	8	90	4'-6"	Str.								Vertical footings to plinth.
	5	72	2'-10"	Str.								Vertical footings to plinth.
	8	90	24'-3"	Str.								Vertical plinth to cap beam.
	5	72	8'-1"	Str.								Vertical plinth.
	5	16	35'-0"	Str.								Longitudinal in plinth.
	4	39	12'-1"	V	11'-6⅜"	3'-8"	4½"					Hoops in columns.
	11	7	9'-2"	Str.								Longitudinal top of beam.
	11	2	41'-6"	XI	30'-9"	1'-8"	3'-8¾"	2'-5"				Longitudinal top of beam.
	11	2	45'-6"	XI	34'-9"	1'-8"	3'-8¾"	2'-5"				Longitudinal top of beam.
	4	4	9'-2"	Str.								Longitudinal top of beam.
	11	8	8'-1"	Str.								Longitudinal bottom of beam.
	11	2	36'-1"	Str.								Longitudinal bottom of beam.
	11	2	39'-9"	Str.								Longitudinal bottom of beam.
	5	42	3'-7"	III	3'-0"	7"	5"	5"				Vertical dowel beam to pedestal.
	6	6	16'-4"	IX	4'-2"	3'-8"	6¾"	6½"				Hoops in pedestals (interior).
	6	6	17'-6"	VI	3'-8"	5'-9"	1'-10"	3'-8"	6¾"	6½"		Hoops in pedestals (exterior).
	5	8	36'-1"	Str.								Longitudinal in sides of beam.
	5	84	16'-3"	IX	3'-8"	4'-2"	5¾"	5½"				Vertical stirrups in beams.
	5	14	11'-11"	XIII	3'-1"	3'-1"	5'-9"	1'-10"				Beam end hoop.
	6	336	7'-3"	Str.								Pile reinforcement.
	5	7	3'-8"	Str.								Transverse top of beam.
	8	8	36'-1"	Str.								Longitudinal top crashwall.
	5	36	3'-8"	Str.								Transverse top crashwall.

PIER 3 NORTHBOUND (CONT'D)

MARK	SIZE	NO.	LENGTH	TYPE	A	B	C	D	E	F	G	LOCATION
PBL11	11	2	41'-6"	XI	30'-9"	1'-8"	3'-8¾"	2'-5"				Longitudinal top of beam.
PBL12	11	2	45'-6"	XI	34'-9"	1'-8"	3'-8¾"	2'-5"				Longitudinal top of beam.
PBL13	4	4	9'-2"	Str.								Longitudinal top of beam.
PBL14	11	8	8'-1"	Str.								Longitudinal bottom of beam.
PBL15	11	2	36'-1"	Str.								Longitudinal bottom of beam.
PBL16	11	2	39'-9"	Str.								Longitudinal bottom of beam.
PBV17	5	42	3'-9"	III	3'-2"	7"	5"	5"				Vertical dowel beam to pedestal.
PPH18	6	6	16'-4"	IX	4'-2"	3'-8"	6¾"	6½"				Hoops in pedestals (interior).
PPH19	6	6	17'-6"	VI	3'-8"	5'-9"	1'-10"	3'-8"	6¾"	6½"		Hoops in pedestals (exterior).
PBL20	5	8	36'-1"	Str.								Longitudinal in sides of beam.
PBS21	5	84	16'-3"	IX	3'-8"	4'-2"	5¾"	5½"				Vertical stirrups in beams.
PBL22	5	14	11'-11"	XII	3'-1"	3'-1"	5'-9"	1'-10"				Beam end hoop.
FFV23	6	336	7'-3"	Str.								Pile reinforcement.
PBT24	5	7	3'-8"	Str.								Transverse top of beam.
PSL25	8	8	36'-1"	Str.								Longitudinal top crashwall.
PST26	5	36	3'-8"	Str.								Transverse top crashwall.

PIER 3 SOUTHBOUND

MARK	SIZE	NO.	LENGTH	TYPE	A	B	C	D	E	F	G	LOCATION
PFL1	5	19	42'-6"	Str.								Longitudinal top & bottom footing.
PFT2	5	29	11'-6"	Str.								Transverse top footing.
PFT3	7	80	11'-6"	Str.								Transverse bottom footing
PFV4	8	90	4'-6"	Str.								Vertical footings to plinth
PFV5	5	72	2'-10"	Str.								Vertical footings to plinth.
PCV6	8	90	24'-3"	Str.								Vertical plinth to cap beam
PSV7	5	72	8'-1"	Str.								Vertical plinth.
PSL8	5	16	35'-0"	Str.								Longitudinal in plinth
PCS9	4	39	12'-1"	V	11'-6⅜"	3'-8"	4½"					Hoops in columns.
PBL10	11	7	9'-2"	Str.								Longitudinal top of beam.
PBL11	11	2	41'-6"	XI	30'-9"	1'-8"	3'-8¾"	2'-5"				Longitudinal top of beam.
PBL12	11	2	45'-6"	XI	34'-9"	1'-8"	3'-8¾"	2'-5"				Longitudinal top of beam.
PBL13	4	4	9'-2"	Str.								Longitudinal top of beam.
PBL14	11	8	8'-1"	Str.								Longitudinal bottom of beam.
PBL15	11	2	36'-1"	Str.								Longitudinal bottom of beam.
PBL16	11	2	39'-9"	Str.								Longitudinal bottom of beam.
PBV17	5	42	3'-8"	III	3'-1"	7"	5"	5"				Vertical dowel beam to pedestal.
PPH18	6	6	16'-4"	IX	4'-2"	3'-8"	6¾"	6½"				Hoops in pedestals (interior).
PPH19	6	6	17'-6"	VI	3'-8"	5'-9"	1'-10"	3'-8"	6¾"	6½"		Hoops in pedestals (exterior).
PBL20	5	8	36'-1"	Str.								Longitudinal in sides of beam.
PBS21	5	84	16'-3"	IX	3'-8"	4'-2"	5¾"	5½"				Vertical stirrups in beams.
PBL22	5	14	11'-11"	XIII	3'-1"	3'-1"	5'-9"	1'-10"				Beam end hoop.
FFV23	6	336	7'-3"	Str.								Pile reinforcement.
PBT24	5	7	3'-8"	Str.								Transverse top of beam.
PSL25	8	8	36'-1"	Str.								Longitudinal top crashwall.
PST26	5	36	3'-8"	Str.								Transverse top crashwall.

PIER 4 NORTHBOUND

MARK	SIZE	NO.	LENGTH	TYPE	A	B	C	D	E	F	G	LOCATION
PFL1	5	19	42'-6"	Str.								Longitudinal top & bottom footing.
PFT2	5	29	11'-6"	Str.								Transverse top footing.
PFT3	7	80	11'-6"	Str.								Transverse bottom footing.
PFV4	8	90	4'-6"	Str.								Vertical footings to plinth.
PFV5	5	72	2'-10"	Str.								Vertical footings to plinth.
PCV6	8	90	25'-0"	Str.								Vertical plinth to cap beam.
PSV7	5	72	8'-3"	Str.								Vertical plinth.
PSL8	5	18	35'-0"	Str.								Longitudinal top of beam.
PCS9	4	39	12'-1"	V	11'-6⅜"	3'-8"	4½"					Hoops in columns.
PBL10	11	7	9'-2"	Str.								Longitudinal top of beam.
PBL11	11	2	41'-6"	XI	30'-9"	1'-8"	3'-8¾"	2'-5"				Longitudinal top of beam.
PBL12	11	2	45'-6"	XI	34'-9"	1'-8"	3'-8¾"	2'-5"				Longitudinal top of beam.
PBL13	4	4	9'-2"	Str.								Longitudinal top of beam.
PBL14	11	8	8'-1"	Str.								Longitudinal bottom of beam.
PBL15	11	2	36'-1"	Str.								Longitudinal bottom of beam.
PBL16	11	2	39'-9"	Str.								Longitudinal bottom of beam
PBV17	5	42	3'-7"	III	3'-0"	7"	5"	5"				Vertical dowel beam to pedestal.
PPH18	6	6	16'-4"	IX	4'-2"	3'-8"	6¾"	6½"				Hoops in pedestals (interior).
PPH19	6	6	17'-6"	VI	3'-8"	5'-9"	1'-10"	3'-8"	6¾"	6½"		Hoops in pedestals (exterior)
PBL20	5	8	36'-1"	Str.								Longitudinal in sides of beam.
PBS21	5	84	16'-3"	IX	3'-8"	4'-2"	5¾"	5½"				Vertical stirrups in beams.
PBL22	5	14	11'-11"	XIII	3'-1"	3'-1"	5'-9"	1'-10"				Beam end hoop.
FFV23	6	336	7'-3"	Str.								Pile reinforcement.
PBT24	5	7	3'-8"	Str.								Transverse top of beam
PSL25	8	8	36'-1"	Str.								Longitudinal top crashwall.
PST26	5	36	3'-8"	Str.								Transverse top crashwall.

BAR TYPES

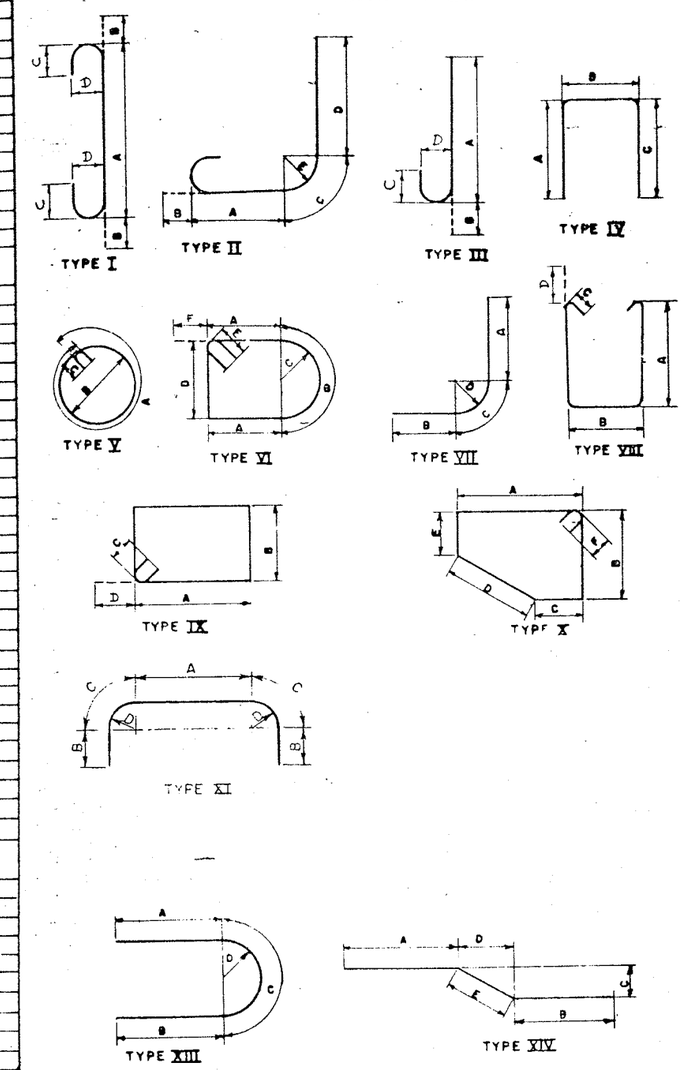

ALL DIMENSIONS ARE OUT TO OUT OF BARS

...NS MADE	IN CHARGE OF R. Parker
REVISION	DESIGNED BY F. Eckel
	DETAILED BY J. Duncan
REVISION	TRACED BY
	TRACING CHECKED BY J.F. Darcy
REVISION	

BRIDGE NO. 2
INTERSTATE ROUTE 481 OVER DEWITT YARDS

BAR LIST #1

DRAWING NO. 1 OF 5

FED. RD. DIST. NO.	STATE	PROJECT NO.	SHEET NO.	TOTAL SHEETS
1	N.Y.	I-481-2(116)	223	309

INTERSTATE ROUTE CONSTRUCTION 81.3
DUTCHMAN'S CREEK BRIDGE (NBAS 2)
ONONDAGA COUNTY

PIER 4 SOUTHBOUND

MARK	SIZE	NO.	LENGTH	TYPE	A	B	C	D	E	F	G	LOCATION
[illegible]	5	19	42'-6"	Str.								Longitudinal top & bottom footing.
[illegible]	5	29	11'-6"	Str.								Transverse top footing.
[illegible]	7	80	11'-6"	Str.								Transverse bottom footing.
[illegible]	8	90	4'-6"	Str.								Vertical footing to plinth.
[illegible]	5	72	2'-10"	Str.								Vertical footing to plinth.
[illegible]	8	90	25'-0"	Str.								Vertical plinth to cap beam.
[illegible]	5	72	8'-3"	Str.								Vertical plinth.
[illegible]	5	18	35'-0"	Str.								Longitudinal in plinth.
[illegible]	4	39	12'-1"	V	11'-6⅝"	3'-8"	4½"					Hoops in columns
10	11	7	9'-2"	Str.								Longitudinal top of beam.
11	11	2	41'-6"	XI	30'-9"	1'-8"	3'-8¾"	2'-5"				Longitudinal top of beam.
12	11	2	45'-6"	XI	34'-9"	1'-8"	3'-8¾"	2'-5"				Longitudinal top of beam.
13	4	4	9'-2"	Str.								Longitudinal top of beam.
14	11	8	8'-1"	Str.								Longitudinal bottom of beam.
15	11	2	36'-1"	Str.								Longitudinal bottom of beam.
16	11	2	39'-9"	Str.								Longitudinal bottom of beam.
17	5	42	3'-7"	III	3'-0"	7"	5"	5"				Vertical dowel beam to pedestal.
18	6	6	16'-4"	IX	4'-2"	3'-8"	6¾"	6½"				Hoops in pedestals (interior).
19	6	6	17'-6"	VI	3'-8"	5'-9"	1'-10"	3'-8"	6¾"	6½"		Hoops in pedestals (exterior).
20	5	8	36'-1"	Str.								Longitudinal in sides of beam.
21	5	84	16'-3"	IX	3'-8"	4'-2"	5¾"	5½"				Vertical stirrups in beams.
22	5	14	11'-11"	XIII	3'-1"	3'-1"	5'-9"	1'-10"				Beam end hoop.
23	6	336	7'-3"	Str.								Pile reinforcement.
24	5	7	3'-8"	Str.								Transverse top beam
25	8	8	36'-1"	Str.								Longitudinal top crashwall.
26	5	36	3'-8"	Str.								Transverse top crashwall.

PIER 5 NORTHBOUND (SOUTHBOUND IDENTICAL)

[illegible]	6	234	7'-3"	Str.								Pile reinforcement
2	10	17	43'-6"	Str.								Longitudinal Bottom Footing
3	11	16	43'-6"	Str.								Longitudinal Top Footing
4	5	95	8'-6"	Str.								Transverse Top & Bottom Footing
5	7	90	4'-0"	Str.								Dowels in Columns
6	7	90	24'-8"	Str.								Vertical Columns
7	4	63	12'-1"	V	11'-6⅝"	3'-8"	4½"					Stirrups in Columns
8	10	2	36'-1"	Str.								Longitudinal Bottom Cap Beam
9	10	2	39'-9"	Str.								" " " "
10	10	8	8'-6"	Str.								" " " "
11	5	10	36'-1"	Str.								" Sides " "
12	11	2	45'-6"	XI	34'-9"	1'-8"	3'-8¾"	2'-5"				" Top " "
13	11	2	41'-6"	XI	30'-9"	1'-8"	3'-8¾"	2'-5"				" " " "
14	11	6	8'-0"	Str.								" " " "
15	5	14	13'-1"	XIII	3'-8"	3'-8"	5'-9"	1'-10"				Horizontal Ends " "
16	5	76	13'-10"	IX	4'-2"	2'-6"	5¾"	5½"				Stirrups Cap Beam
17	5	42	3'-6"	III	2'-11"	7"	5"	5"				Vertical Pedestals
18	6	6	16'-0"	IX	3'-8"	4'-0"	6¾"	6½"				Horizontal Interior Pedestals
19	6	6	17'-5"	VI	3'-7¼"	5'-9"	1'-10"	3'-8"	6¾"	6½"		" Fascia "

PIER 6 NORTHBOUND

[illegible]	6	234	7'-3"	Str.								Pile reinforcement
2	10	17	43'-6"	Str.								Longitudinal Bottom Footing
3	11	16	43'-6"	Str.								" Top "
4	5	95	8'-6"	Str.								Transverse Top & Bottom Footing
5	7	90	4'-0"	Str.								Dowels in Columns
6	7	90	21'-11"	Str.								Vertical Columns
7	4	57	12'-1"	V	11'-6⅝"	3'-8"	4½"					Stirrups in Columns
8	10	2	36'-1"	Str.								Longitudinal Bottom Cap Beam
9	10	2	39'-9"	Str.								" " " "
10	10	8	8'-6	Str.								" " " "
11	5	10	36'-1"	Str.								" Sides " "
12	11	2	45'-6"	XI	34'-9"	1'-8"	3'-8¾"	2'-5"				" Top " "

PIER 6 NORTHBOUND CONT'D

MARK	SIZE	NO.	LENGTH	TYPE	A	B	C	D	E	F	G	LOCATION
PBL13	11	2	41'-6"	XI	30'-9"	1'-8"	3'-8¾"	2'-5"				Longitudinal Top Cap Beam
PBL14	11	6	8'-0"	Str.								" " " "
PBH15	5	14	13'-1"	XIII	3'-8"	3'-8"	5'-9"	1'-10"				Horizontal Ends " "
PBS16	5	76	13'-10"	IX	4'-2"	2'-6"	5¾"	5½"				Stirrups Cap Beam
PBV17	5	42	3'-6"	III	2'-11"	7"	5"	5"				Vertical Pedestals
PPH18	6	6	16'-0"	IX	3'-8"	4'-0"	6¾"	6½"				Horizontal Interior Pedestals
PPH19	6	6	17'-5"	VI	3'-7¼"	5'-9"	1'-10"	3'-8"	6¾"	6½"		" Fascia "

PIER 6 SOUTHBOUND

FFV1	6	234	7'-3"	Str.								Pile reinforcement
PFL2	10	17	43'-6"	Str.								Longitudinal Bottom Footing
PFL3	11	16	43'-6"	Str.								" Top "
PFT4	5	95	8'-6"	Str.								Transverse Top & Bottom Footing
PFV5	7	90	4'-0"	Str.								Dowels in Columns
PCV6	7	90	25'-4"	Str.								Vertical Columns
PCS7	4	66	12'-1"	V	11'-6⅝"	3'-8"	4½"					Stirrups in Column
PBL8	10	2	36'-1"	Str.								Longitudinal Bottom Cap Beam
PBL9	10	2	39'-9"	Str.								" " " "
PBL10	10	8	8'-6"	Str.								" " " "
PBL11	5	10	36'-1"	Str.								" Sides " "
PBL12	11	2	45'-6"	XI	34'-9"	1'-8"	3'-8¾"	2'-5"				" Top " "
PBL13	11	2	41'-6"	XI	30'-9"	1'-8"	3'-8¾"	2'-5"				" " " "
PBL14	11	6	8'-0"	Str.								" " " "
PBH15	5	14	13'-1"	XIII	3'-8"	3'-8"	5'-9"	1'-10"				Horizontal Ends Cap Beam
PBS16	5	76	13'-10"	IX	4'-2"	2'-6"	5¾"	5½"				Stirrups Cap Beam
PBV17	5	42	3'-6"	III	2'-11"	7"	5"	5"				Vertical Pedestals
PPH18	6	6	16'-0"	IX	3'-8"	4'-0"	6¾"	6½"				Horizontal Interior Pedestals
PPH19	6	6	17'-5"	VI	3'-7¼"	5'-9"	1'-10"	3'-8"	6¾"	6½"		Horizontal Fascia Pedestals

BAR TYPES

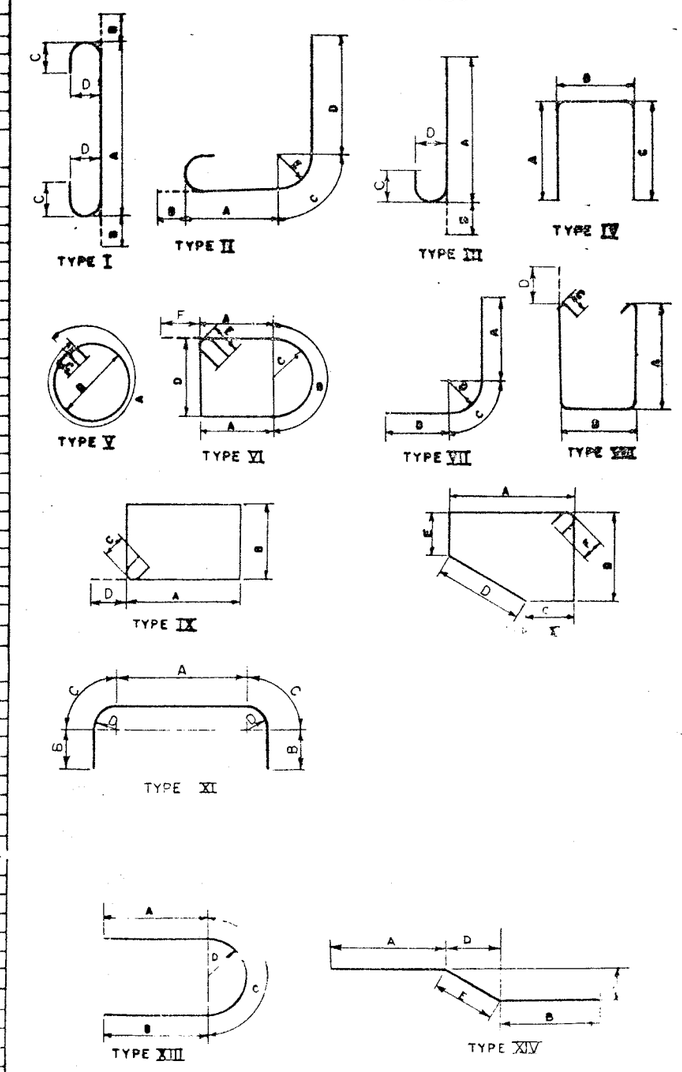

ALL DIMENSIONS ARE OUT TO OUT OF BAR

IN CHARGE OF	R. Parker
DESIGNED BY	F. Eckel
DETAILED BY	J. Durrant
TRACED BY	
TRACING CHECKED BY	J.F. Darcy

BRIDGE NO. 2
INTERSTATE ROUTE 481 OVER DEWITT YARDS

BAR LIST #2

DRAWING NO. 15 OF 50

FED. RD. REG. NO.	STATE	FEDERAL AID PROJECT NO.	SHEET NO.	TOTAL SHEETS
1	N.Y.	I-481-2(16)	224	309

INTERSTATE ROUTE CONSTRUCTION 570
BUTTERNUT INTERCHANGE (PHASE 2)
ONONDAGA COUNTY

PIER 7 NORTHBOUND

MARK	SIZE	NO.	LENGTH	TYPE	A	B	C	D	E	F	G	LOCATION
PFL1	7	17	41'-6"	Str								Longitudinal bottom of footing.
PFL2	8	15	41'-6"	Str								Longitudinal top of footing.
PFT3	5	29	8'-6"	Str								Transverse top of footing.
PFT4	5	56	8'-6"	Str								Transverse bottom of footing.
PFV5	7	72	4'-0"	Str								Dowels footing to column.
PCV6	7	72	27'-1"	Str								Vertical in columns.
PCS7	4	75	11'-1"	V	10'-1½"	3'-2"	0'-5¾"					Hoops in columns.
PBL8	10	2	38'-4"	Str								Longitudinal in bottom of beam.
PBL9	10	6	7'-4"	Str								Longitudinal in bottom of beam.
PBL10	11	4	8'-8"	Str								Longitudinal in top of beam.
PBL11	11	2	40'-0"	XI	30'-3"	1'-2"	3'-8¾"	2'-5"				Longitudinal in top of beam.
PPH12	6	6	14'-5"	IX	3'-8"	3'-2"	6¾"	6½"				Hoops interior pedestals.
PPH13	6	6	15'-2"	VI	3'-1¾"	5'-0"	1'-7"	3'-2"	6¾"	6½"		Hoops exterior pedestals.
PBV14	5	42	3'-4"	III	2'-9"	7"	5"	5"				Dowels pier beam to pedestals.
PBL15	5	8	35'-7"	Str								Longitudinal sides of beam.
PBL16	11	2	44'-0"	XI	34'-3"	1'-2"	3'-8¾"	2'-5"				Longitudinal in top of beam.
PBL17	10	2	35'-7"	Str								Longitudinal in bottom of beam.
PBS18	4	72	12'-2"	IX	3'-8"	2'-2"	4½"	4½"				Stirrups pier beam.
PBH19	5	12	11'-2"	XIII	3'-1"	3'-1"	5'-0"	1'-7"				Hoop end of pier beam.
FFV20	6	156	7'-3"	Str								Pile reinforcement.

PIER 7 SOUTHBOUND

MARK	SIZE	NO.	LENGTH	TYPE	A	B	C	D	E	F	G	LOCATION
PFL1	7	17	41'-6"	Str								Longitudinal bottom of footing.
PFL2	8	15	41'-6"	Str								Longitudinal top of footing.
PFT3	5	29	8'-6"	Str								Transverse top of footing.
PFT4	5	56	8'-6"	Str								Transverse bottom of footing.
PFV5	7	72	4'-0"	Str								Dowels footing to column.
PCV6	7	72	26'-5"	Str								Vertical in columns.
PCS7	4	78	11'-1"	V	10'-1½"	3'-2"	0'-5¾"					Hoops in columns.
PBL8	10	2	38'-4"	Str								Longitudinal in bottom of beam.
PBL9	10	6	7'-4"	Str								Longitudinal in bottom of beam.
PBL10	11	4	8'-8"	Str								Longitudinal in top of beam.
PBL11	11	2	40'-0"	XI	30'-3"	1'-2"	3'-8¾"	2'-5"				Longitudinal in top of beam.
PPH12	6	6	14'-5"	IX	3'-8"	3'-2"	6¾"	6½"				Hoops interior pedestals.
PPH13	6	6	15'-2"	VI	3'-1¾"	5'-0"	1'-7"	3'-2"	6¾"	6½"		Hoops exterior pedestals.
PBV14	5	42	3'-4"	III	2'-9"	7"	5"	5"				Dowels pier beam to pedestals.
PBL15	5	8	35'-7"	Str								Longitudinal sides of beam.
PBL16	11	2	44'-0"	XI	34'-3"	1'-2"	3'-8¾"	2'-5"				Longitudinal in top of beam.
PBL17	10	2	35'-7"	Str								Longitudinal in bottom of beam.
PBS18	4	72	12'-2"	IX	3'-8"	2'-2"	4½"	4½"				Stirrups pier beam.
PBH19	5	12	11'-2"	XIII	3'-1"	3'-1"	5'-0"	1'-7"				Hoop end of pier beam.
FFV20	6	156	7'-3"	Str								Pile reinforcement.

PIER 8 NORTHBOUND

MARK	SIZE	NO.	LENGTH	TYPE	A	B	C	D	E	F	G	LOCATION
PFL1	7	17	41'-6"	Str								Longitudinal bottom of footing.
PFL2	8	15	41'-6"	Str								Longitudinal top of footing.
PFT3	5	29	8'-6"	Str								Transverse top of footing.
PFT4	5	56	8'-6"	Str								Transverse bottom of footing.
PFV5	7	72	4'-0"	Str								Dowels footing to column.
PCV6	7	72	26'-10"	Str								Vertical in columns.
PCS7	4	72	11'-1"	V	10'-1½"	3'-2"	0'-5¾"					Hoops in columns.
PBL8	10	2	38'-4"	Str								Longitudinal in bottom of beam.
PBL9	10	6	7'-4"	Str								Longitudinal in bottom of beam.
PBL10	11	4	8'-8"	Str								Longitudinal in top of beam.
PBL11	11	2	40'-0"	XI	30'-3"	1'-2"	3'-8¾"	2'-5"				Longitudinal in top of beam.
PPH12	6	6	14'-5"	IX	3'-8"	3'-2"	6¾"	6½"				Hoops interior pedestals.
PPH13	6	6	15'-2"	VI	3'-1¾"	5'-0"	1'-7"	3'-2"	6¾"	6½"		Hoops exterior pedestals.
PBV14	5	42	3'-4"	III	2'-9"	7"	5"	5"				Dowels pier beam to pedestals.
PBL15	5	8	35'-7"	Str								Longitudinal sides of beam.
PBL16	11	2	44'-0"	XI	34'-3"	1'-2"	3'-8¾"	2'-5"				Longitudinal in top of beam.
PBL17	10	2	35'-7"	Str								Longitudinal in bottom of beam.
PBS18	4	72	12'-2"	IX	3'-8"	2'-2"	4½"	4½"				Stirrups pier beam.
PBH19	5	12	11'-2"	XIII	3'-1"	3'-1"	5'-0"	1'-7"				Hoop end of pier beam.
FFV20	6	156	7'-3"	Str								Pile reinforcement.

PIER 8 SOUTHBOUND

MARK	SIZE	NO.	LENGTH	TYPE	A	B	C	D	E	F	G	LOCATION
PFL1	7	17	41'-6"	Str								Longitudinal bottom of footing.
PFL2	8	15	41'-6"	Str								Longitudinal top of footing.
PFT3	5	29	8'-6"	Str								Transverse top of footing.
PFT4	5	56	8'-6"	Str								Transverse bottom of footing.
PFV5	7	72	4'-0"	Str								Dowels footing to column.
PCV6	7	72	27'-11"	Str								Vertical in columns.
PCS7	4	75	11'-1"	V	10'-1½"	3'-2"	0'-5¾"					Hoops in columns.
PBL8	10	2	38'-4"	Str								Longitudinal in top of beam.
PBL9	10	6	7'-4"	Str								Longitudinal in top of beam.
PBL10	11	4	8'-8"	Str								Longitudinal in top of beam.
PBL11	11	2	40'-0"	XI	30'-3"	1'-2"	3'-8¾"	2'-5"				Longitudinal in bottom of beam.
PPH12	6	6	14'-5"	IX	3'-8"	3'-2"	6¾"	6½"				Hoops interior pedestals.
PPH13	6	6	15'-2"	VI	3'-1¾"	5'-0"	1'-7"	3'-2"	6¾"	6½"		Hoops exterior pedestals.
PBV14	5	42	3'-4"	III	2'-9"	7"	5"	5"				Dowels pier beam to pedestals.
PBL15	5	8	35'-7"	Str								Longitudinal sides of beam.
PBL16	11	2	44'-0"	XI	34'-3"	1'-2"	3'-8¾"	2'-5"				Longitudinal in top of beam.
PBL17	10	2	35'-7"	Str								Longitudinal in bottom of beam.
PBS18	4	72	12'-2"	IX	3'-8"	2'-2"	4½"	4½"				Stirrups pier beam.
PBH19	5	12	11'-2"	XIII	3'-1"	3'-1"	5'-0"	1'-7"				Hoop end of pier beam.
FFV20	6	156	7'-3"	Str								Pile reinforcement.

PIER 9 NORTHBOUND

MARK	SIZE	NO.	LENGTH	TYPE	A	B	C	D	E	F	G	LOCATION
PFL1	7	17	41'-6"	Str								Longitudinal bottom of footing.
PFL2	8	15	41'-6"	Str								Longitudinal top of footing.
PFT3	5	29	8'-6"	Str								Transverse top of footing.
PFT4	5	56	8'-6"	Str								Transverse bottom of footing.
PFV5	7	72	4'-0"	Str								Dowels footing to column.
PCV6	7	72	25'-10"	Str								Vertical in columns.
PCS7	4	69	11'-1"	V	10'-1½"	3'-2"	0'-5¾"					Hoops in columns.
PBL8	10	2	38'-4"	Str								Longitudinal in bottom of beam.
PBL9	10	6	7'-4"	Str								Longitudinal in bottom of beam.
PBL10	11	4	8'-8"	Str								Longitudinal in top of beam.
PBL11	11	2	40'-0"	XI	30'-3"	1'-2"	3'-8¾"	2'-5"				Longitudinal in top of beam.
PPH12	6	6	14'-5"	IX	3'-8"	3'-2"	6¾"	6½"				Hoops interior pedestals.
PPH13	6	6	15'-2"	VI	3'-1¾"	5'-0"	1'-7"	3'-2"	6¾"	6½"		Hoops exterior pedestals.
PBV14	5	42	3'-4"	III	2'-9"	7"	5"	5"				Dowels pier beam to pedestals.
PBL15	5	8	35'-7"	Str								Longitudinal sides of beam.
PBL16	11	2	44'-0"	XI	34'-3"	1'-2"	3'-8¾"	2'-5"				Longitudinal in top of beam.
PBL17	10	2	35'-7"	Str								Longitudinal in bottom of beam.
PBS18	4	72	12'-2"	IX	3'-8"	2'-2"	4½"	4½"				Stirrups pier beam.
PBH19	5	12	11'-2"	XIII	3'-1"	3'-1"	5'-0"	1'-7"				Hoop end of pier beam.
FFV20	6	156	7'-3"	Str								Pile reinforcement.

BAR TYPES

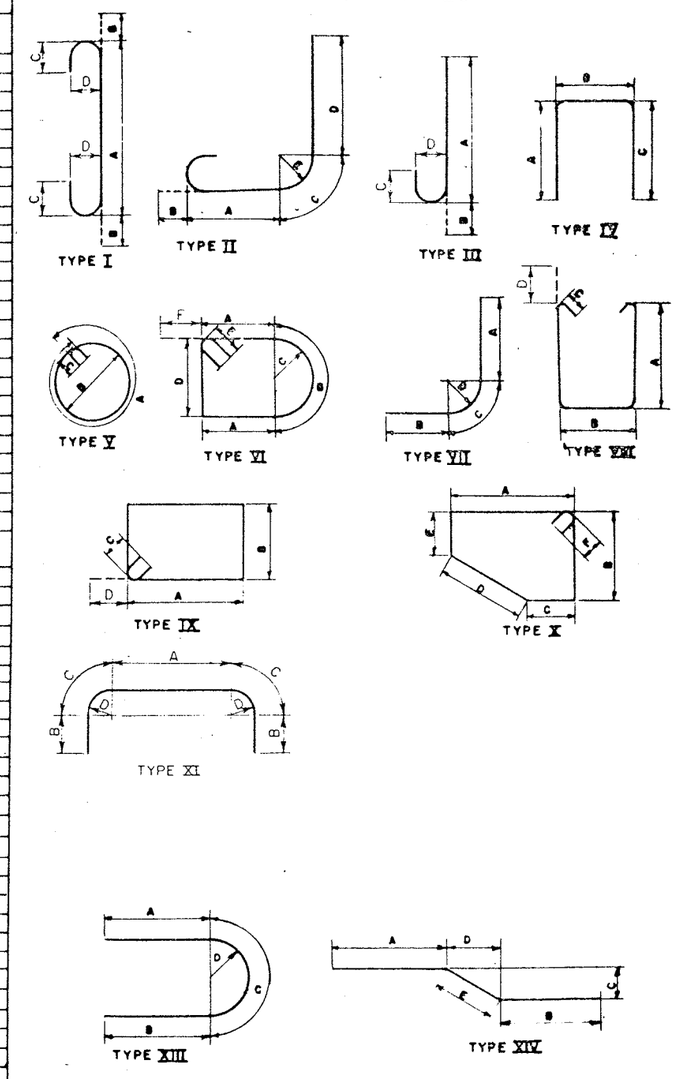

ALL DIMENSIONS ARE OUT TO OUT OF BARS

B MADE	
EVISION	
EVISION	
EVISION	

IN CHARGE OF R. Parker
DESIGNED BY F. Eckel
DETAILED BY J. Dunnett
TRACED BY
TRACING CHECKED BY J.F. Darcy

BRIDGE NO. 2
INTERSTATE ROUTE 481 OVER DEWITT YARDS

BAR LIST #5

FED. RD. REG. NO.	STATE	FEDERAL AID PROJECT NO.	SHEET NO.	TOTAL SHEETS
1	N.Y.	I-BRC-3(29) I-481-2(16)	225	309

INTERSTATE ROUTE CONNECTION 570
BUTTERNUT INTERCHANGE (PHASE 2)
ONONDAGA COUNTY

PIER 9 SOUTHBOUND

MARK	SIZE	NO.	LENGTH	TYPE	A	B	C	D	E	F	G	LOCATION
PFL1	8	14	41'-6"	Str.								Bottom of footing (Longitudinal).
PFL2	8	16	41'-6"	Str.								Top of footing (Longitudinal).
PFT3	5	88	8'-6"	Str.								Top & bottom of footing (Transverse).
PFY4	7	69	4'-0"	Str.								Dowels footing to column.
PCV5	7	69	26'-7"	Str.								Vertical column.
PCS6	4	72	11'-1"	V	10'-1½"	3'-2"	5¾"					Hoops in column.
PBL7	10	2	38'-5"	Str.								Top of beam (Longitudinal).
PBL8	10	6	7'-10"	Str.								Top of beam (Longitudinal).
PBL9	11	4	8'-8"	Str.								Bottom of beam (Longitudinal).
PBL10	11	2	40'-0"	XI	30'-3"	1'-2"	3'-8¾"	2'-5"				Bottom of beam (Longitudinal).
PBH11	6	6	14'-4"	IX	3'-8"	3'-2"	6¾"	6½"				Hoops in interior pedestals.
PBH12	6	6	15'-1"	VI	3'-4¾"	5'-0"	1'-7"	3'-2"	6¾"	6½"		Hoops in exterior pedestals.
PDY13	5	42	3'-4"	III	2'-9"	7"	5"	5"				Dowels pier beam to pedestals.
PBL14	5	8	35'-9"	Str.								Side of beam (Longitudinal).
PBL15	11	2	44'-0"	XI	34'-3"	1'-2"	3'-8¾"	2'-5"				Top of beam (Longitudinal).
PBL16	10	2	35'-9"	Str.								Bottom of beam (Longitudinal).
PBS17	5	60	12'-3"	IX	3'-8"	2'-0"	5¾"	5½"				Stirrups capbeam.
PBL18	5	10	11'-2"	XIII	3'-1"	3'-1"	5'-0"	1'-7"				Longitudinal in capbeam.
PFY19	6	168	7'-3"	Str.								Pile reinforcement.

PIER 10 NORTHBOUND

PFL1	9	32	41'-6"	Str.								Longitudinal (Top & bottom) footing.
PFT3	5	108	8'-6"	Str.								Transverse (Top & bottom) footing.
PFY4	7	72	4'-6"	Str.								Dowels footing to column.
PCV5	7	72	24'-10"	Str.								Vertical in columns.
PCS6	4	61	11'-1"	V	10'-1½"	3'-2"	5¾"					Hoops in columns.
PBL7	10	2	38'-3"	Str.								Longitudinal in bottom cap beam.
PBL8	10	3	7'-10"	Str.								Longitudinal in bottom cap beam.
PBL9	10	2	35'-3"	Str.								Longitudinal in bottom cap beam.
PBL10	11	4	8'-8"	Str.								Longitudinal in top cap beam.
PBL11	11	2	39'-8"	XI	29'-11"	1'-2"	3'-8¾"	2'-5"				Longitudinal in top cap beam.
PBL12	11	2	43'-8"	XI	33'-11"	1'-2"	3'-8¾"	2'-5"				Longitudinal in top cap beam.
PBL13	5	5	35'-2"	Str.								Longitudinal in sides cap beam.
PBH14	5	12	11'-2"	XIII	3'-1"	3'-1"	5'-0"	1'-7"				Horizontal ends of cap beam.
PBS15	5	56	12'-3"	IX	3'-8"	2'-0"	5¾"	5½"				Stirrups in cap beam.
PDY16	5	42	3'-4"	III	2'-9"	7"	5"	5"				Vertical in pedestals.
PBH17	6	6	13'-3"	IX	3'-4"	3'-2"	6¾"	6½"				Horizontal interior pedestals
PBH18	6	6	14'-11"	VI	5'-0"	5'-0"	1'-7"	3'-2"	6¾"	6½"		Horizontal fascia pedestals.
PFY19	6	168	7'-3"	Str.								Vertical in piles.

PIER 0 SOUTHBOUND

PFL1	7	32	41'-6"	Str.								Longitudinal (Top & bottom) footing.
PFT3	5	108	8'-6"	Str.								Transverse (Top & bottom) footing.
PFY4	7	72	4'-6"	Str.								Dowels footing to column.
PCV5	7	72	24'-9"	Str.								Vertical in columns.
PCS6	4	66	11'-1"	V	10'-1½"	3'-2"	5¾"					Hoops in columns.
PBL7	10	2	38'-3"	Str.								Longitudinal in bottom cap beam.
PBL8	10	6	7'-10"	Str.								Longitudinal in bottom cap beam.
PBL9	10	2	35'-3"	Str.								Longitudinal in bottom cap beam.
PBL10	11	4	8'-8"	Str.								Longitudinal in top cap beam.
PBL11	11	2	39'-8"	XI	29'-11"	1'-2"	3'-8¾"	2'-5"				Longitudinal in top cap beam.
PBL12	11	2	43'-8"	XI	33'-11"	1'-2"	3'-8¾"	2'-5"				Longitudinal in top cap beam.
PBL13	5	8	35'-2"	Str.								Longitudinal in sides cap beam.
PBH14	5	12	11'-2"	XIII	3'-1"	3'-1"	5'-0"	1'-7"				Horizontal ends of cap beam.
PBS15	5	56	12'-3"	IX	3'-8"	2'-0"	5¾"	5½"				Stirrups in cap beam.
PDY16	5	42	3'-4"	III	2'-9"	7"	5"	5"				Vertical in pedestals.
PBH17	6	6	13'-9"	IX	3'-4"	3'-2"	6¾"	6½"				Horizontal interior pedestals.
PBH18	6	6	14'-11"	VI	3'-0"	5'-0"	1'-7"	3'-2"	6¾"	6½"		Horizontal fascia pedestals.
PFY19	6	168	7'-3"	Str.								Vertical in piles.

PIER 1 SOUTHBOUND (PIER 1 NORTHBOUND IDENTICAL)

MARK	SIZE	NO.	LENGTH	TYPE	A	B	C	D	E	F	G	LOCATION
PFL1	8	16	43'-6"	Str.								Longitudinal-Top of footing.
PFL2	10	16	43'-6"	Str.								Longitudinal-Bottom of footing.
PFT3	5	95	8'-6"	Str.								Transverse-Top & Bottom footing.
PFY4	7	90	4'-0"	Str.								Dowels in footing.
PCV5	7	90	24'-11"	Str.								Vertical in column.
PCS6	4	63	12'-1"	V	11'-6¾"	3'-8"	4½"					Hoops in column.
PBL7	9	2	36'-1"	Str.								Longitudinal-Bottom of beam.
PBL8	9	2	39'-6"	Str.								Longitudinal-Bottom of beam.
PBL9	9	6	7'-6"	Str.								Longitudinal-Bottom of beam.
PBL10	5	10	36'-1"	Str.								Longitudinal-Sides of beam.
PBL11	10	4	7'-6"	Str.	✓	✓	✓	✓				Longitudinal-Top of beam.
PBL12	10	2	41'-6"	XI	30'-9"	1'-11"	3'-10"	2'-5"				Longitudinal-Top of beam.
PBL13	10	2	45'-6"	XI	34'-9"	1'-11"	3'-10"	2'-5"				Longitudinal-Top of beam.
PBH14	5	14	13'-1"	XIII	3'-8"	3'-8"	5'-9"	1'-10"				Pier cap end hoops.
PBS15	4	48	13'-11"	IX	4'-2"	2'-7"	4½"	4½"				Stirrups in cap beam.
PPH16	6	6	16'-0"	IX	3'-8"	4'-0"	6¾"	6½"				Hoops in interior pedestals.
PPH17	6	6	17'-5"	VI	3'-7¼"	5'-9"	1'-10"	3'-8"	6¾"	6½"		Hoops in fascia pedestals.
PBY18	5	42	3'-6"	III	2'-11"	7"	5"	5"				Dowels pier beam to pedestal
PFY19	6	156	7'-3"	Str.								Pile reinforcement.

BAR TYPES

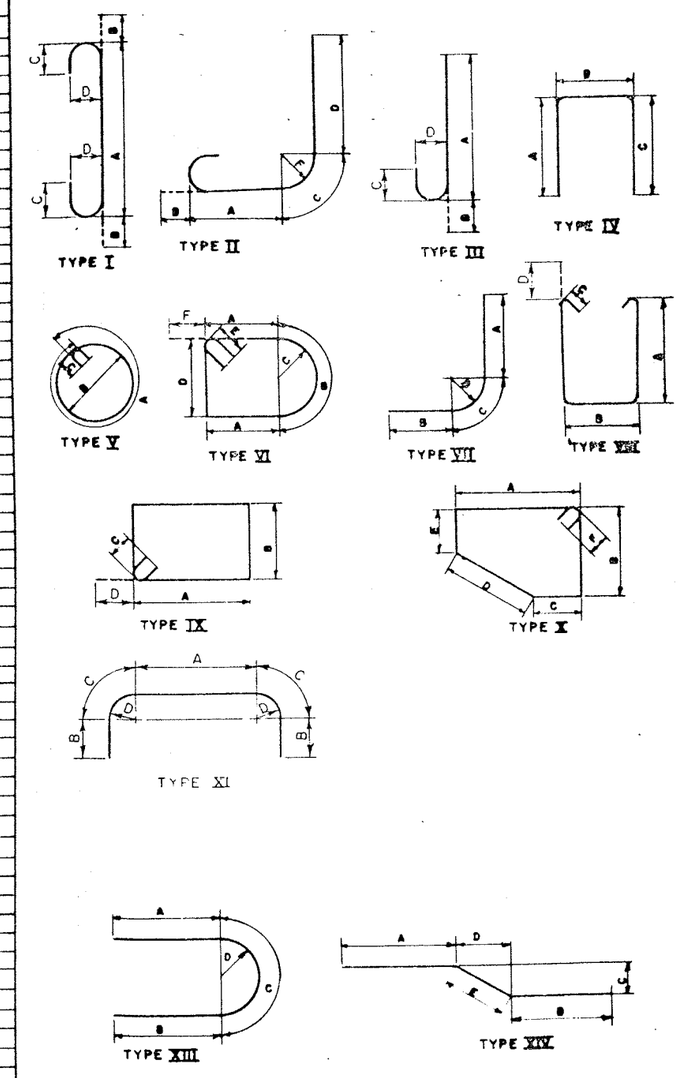

ALL DIMENSIONS ARE OUT TO OUT OF BARS

NS MADE
REVISION
REVISION
REVISION

IN CHARGE OF R. Parker
DESIGNED BY F. Eckel
DETAILED BY J. DURRANT
TRACED BY
TRACING CHECKED BY J.F.D.

BRIDGE NO. 2
INTERSTATE ROUTE 481 OVER DEWITT YARDS

BAR LIST #4

F.A.S.H. NO.

FED. RD. REG NO.	STATE	FEDERAL AID PROJECT NO.	SHEET NO	TOTAL SHEETS
1	NEW YORK	F-890-3(23) F-651-2(116)	226	309

INTERSTATE ROUTE CONNECTION 570
BUTTERNUT INTERCHANGE (PHASE 2)
ONONDAGA COUNTY

PIER 10 N.B.

MARK	SIZE	NO.	LENGTH	TYPE	A	B	C	D	E	F	G	LOCATION
PFL1	10	14	41'-6"	Str								Longitudinal in bottom of footing
PFL2	8	16	41'-6"	Str								Longitudinal in top of footing
PFT3	5	102	5'-6"	Str								Transverse top & bottom footing
PFV4	7	72	4'-3"	Str								Dowels footing to column
PCV5	7	72	22'-6"	Str								Vertical in columns
PCS6	4	60	10'-11"	V	10'-1½"	3'-2"	0'-4½"					Hoops in columns
PBS7	4	72	12'-2"	IX	3'-8"	2'-2"	4½"	4½"				Stirrups in cap beam
PBL8	10	2	37'-10"	Str								Longitudinal in bottm of beam
PBL9	10	6	7'-4"	Str								Longitudinal in bottom of beam
PBL10	11	4	7'-8"	Str								Longitudinal in top of beam
PBL11	11	2	39'-8"	XI	29'-11"	1'-2"	3'-8¾"	2'-5"				Longitudinal in top of beam
PBH12	6	6	13'-9"	IX	3'-4"	3'-2"	6¾"	6½"				Hoops in pedestals (interior)
PBH13	6	6	14'-11"	VI	3'-0"	5'-0"	1'-7"	3'-2"	6¾"	6½"		Hoops in pedestals (exterior)
PBV14	5	42	3'-1"	III	2'-6"	7"	5"	5"				Dowels pier beam to pedestals
PBL15	5	8	35'-3"	Str								Longitudinal in sides of beam
PBL16	11	2	43'-8"	XI	33'-11"	1'-2"	3'-8¾"	2'-5"				Longitudinal in top of beam
PBL17	10	2	35'-3"	Str								Longitudinal in bottom of beam
PBL18	5	12	11'-2"	XIII	3'-1"	3'-1"	5'-0"	1'-7"				Horizontal in ends of beam
PFV19	6	144	7'-3"	Str								Reinforcement in piles

PIER 11 S.B.

PFL1	10	14	41'-6"	Str								Longitudinal in bottom of footing
PFL2	8	16	41'-6"	Str								Longitudinal in top of footing
PFT3	5	102	8'-6"	Str								Transverse top & bottom of footing
PFV4	7	72	4'-3"	Str								Dowels footing to column
PCV5	7	72	22'-6"	Str								Vertical in columns
PCS6	4	60	10'-11"	V	10'-1½"	3'-2"	4½"					Hoops in columns
PBS7	4	72	12'-2"	IX	3'-8"	2'-2"	4½"	4½"				Stirrups in cap beam
PBL8	10	2	37'-10'	Str								Longitudinal in bottom of beam
PBL9	10	6	7'-4"	Str								Longitudinal in bottom of beam
PBL10	11	4	7'-8"	Str								Longitudinal in top of beam
PBL11	11	2	39'-8"	XI	29'-11"	1'-2"	3'-8¾"	2'-5"				Longitudinal in top of beam
PBH12	6	6	13'-9"	IX	3'-4"	3'-2"	6¾"	6½"				Hoops in pedestals (interior)
PBH13	6	6	14'-11"	VI	3'-0"	5'-0"	1'-7"	3'-2"	6¾"	6½"		Hoops in pedestals (exterior)
PBV14	5	42	3'-1"	III	2'-6"	7"	5"	5"				Dowels pier beam to pedestals
PBL15	5	8	35'-3"	Str								Longitudinal in sides of beam
PBL16	11	2	43'-8"	XI	33'-11"	1'-2"	3'-8¾"	2'-5"				Longitudinal in top of beam
PBL17	10	2	35'-3"	Str								Longitudinal in bottom of beam
PBL18	5	12	11'-2"	XIII	3'-1"	3'-1"	5'-0"	1'-7"				Horizontal in ends of beam
PFV19	6	144	7'-3"	Str								Reinforcement in piles

PIER 12 N.B.

PFL1	10	14	41'-6"	Str								Longitudinal in bottom of footing
PFL2	8	16	41'-6"	Str								Longitudinal in top of footing
PFT3	5	102	8'-6"	Str								Transverse top & bottom footing
PFV4	7	72	4'-3"	Str								Dowels footing to column
PCV5	7	72	19'-2"	Str								Vertical in columns
PCS6	4	51	10'-11"	V	10'-1½"	3'-2"	4½"					Hoops in columns
PBS7	4	72	12'-2"	IX	3'-8"	2'-2"	4½"	4½"				Stirrups in cap beam
PBL8	10	2	37'-10"	Str								Longitudinal in bottom of beam
PBL9	10	6	7'-4"	Str								Longitudinal in bottom of beam
PBL10	11	4	7'-8"	Str								Longitudinal in top of beam
PBL11	11	2	39'-8"	XI	29'-11"	1'-2"	3'-8¾"	2'-5"				Longitudinal in top of beam
PBH12	6	6	13'-9"	IX	3'-4"	3'-2"	6¾"	6½"				Hoops in pedestals (interior)
PBH13	6	6	14'-11"	VI	3'-0"	5'-0"	1'-7"	3'-2"	6¾"	6½"		Hoops in pedestals (exterior)
PBV14	5	42	3'-1"	III	2'-6"	7"	5"	5"				Dowels pier beam to pedestals
PBL15	5	8	35'-3"	Str								Longitudinal in sides of beam
PBL16	11	2	43'-8"	XI	33'-11"	1'-2"	3'-8¾"	2'-5"				Longitudinal in top of beam
PBL17	10	2	35'-3"	Str								Longitudinal in bottom of beam
PBL18	5	12	11'-2"	XIII	3'-1"	3'-1"	5'-0"	1'-7"				Horizontal in ends of beam
PFV19	6	144	7'-3"	Str								Reinforcement in piles

PIER 12 S.B. IDENTICAL TO PIER 11 N.B.

PIER 13 N.B.

MARK	SIZE	NO.	LENGTH	TYPE	A	B	C	D	E	F	G	LOCATION
PFL1	10	27	41'-6"	Str								Longitudinal in top & bottom of footing
PFT2	5	61	7'-0"	Str								Transverse in top & bottom of footing
PFV3	7	75	4'-6"	Str								Dowels footing to columns
PCV5	7	75	15'-0"	Str								Vertical in columns
PCS8	4	39	10'-11"	V	10'-1½"	3'-2"	0'-4½"					Hoops in columns
PBL9	10	6	6'-10"	Str								Longitudinal in bottom of beam
PBL10	11	4	7'-8"	Str								Longitudinal in top of beam
PBL11	11	2	39'-8"	XI	29'-11"	1'-2"	3'-8¾"	2'-5"				Longitudinal in top of beam
PBL12	11	2	43'-8"	XI	33'-11"	1'-2"	3'-8¾"	2'-5"				Longitudinal in top of beam
PBL13	5	8	35'-2½"	Str								Longitudinal in beam sides
PBL14	10	2	35'-2½"	Str								Longitudinal in bottom of beam
PBL15	10	2	38'-2½"	Str								Longitudinal in bottom of beam
PBL16	5	12	11'-2"	XIII	3'-1"	3'-1"	5'-0"	1'-7"				Beam end hoop.
PBV17	5	42	3'-1"	III	2'-6"	7"	5"	5"				Vertical dowel beam to pedestal
PBH18	6	6	13'-9"	IX	3'-4"	3'-2"	6¾"	6½"				Hoops in pedestals (interior)
PBH19	6	6	14'-11"	VI	3'-0"	5'-0"	1'-7"	3'-2"	6¾"	6½"		Hoops in pedestals (exterior)
PFV20	6	144	7'-3"	Str								Pile reinforcement
PBS21	4	68	12'-2"	IX	3'-8"	2'-2"	0'-4½"	4½"				Stirrups in cap beam

PIER 13 S.B. IDENTICAL TO PIER 12 N.B.

PIER 14 N.B.

PFL1	10	27	41'-6"	Str								Longitudinal in top & bottom of footing
PFT2	5	61	7'-0"	Str								Transverse top & bottom of footing
PFV3	7	24	4'-6"	Str								Dowels footing to columns
PFV4	10	56	7'-2"	III	5'-7"	1'-7½"	1'-0¾"	1'-3¼"				Dowels footing to columns
PCV6	10	56	10'-11"	Str								Vertical in columns (exterior)
PCV7	7	24	11'-4"	Str								Vertical in columns (interior)
PCS8	4	27	10'-11"	V	10'-1½"	3'-2"	0'-4½"					Hoops in columns
PBL9	10	6	6'-10"	Str								Longitudinal in bottom of beam
PBL10	11	4	7'-8"	Str								Longitudinal in top of beam
PBL11	11	2	39'-8"	XI	29'-11"	1'-2"	3'-8¾"	2'-5"				Longitudinal in top of beam
PBL12	11	2	43'-8"	XI	33'-11"	1'-2"	3'-8¾"	2'-5"				Longitudinal in top of beam
PBL13	5	8	35'-2½"	Str								Longitudinal in beam sides
PBL14	10	2	35'-2½"	Str								Longitudinal in bottom of beam
PBL15	10	2	38'-2½"	Str								Longitudinal in bottom of beam
PBL16	5	12	11'-2"	XIII	3'-1"	3'-1"	5'-0"	1'-7"				Beam end hoop
PBV17	5	42	3'-1"	III	2'-6"	7"	5"	5"				Vertical dowel beam to pedestal
PBH18	6	6	13'-9"	IX	3'-4"	3'-2"	6¾"	6½"				Hoops in pedestals (interior)
PBH19	6	6	14'-11"	VI	3'-0	5'-0"	1'-7"	3'-2"	6¾"	6½"		Hoops in pedestals (exterior)
PFV20	6	144	7'-3"	Str								Pile reinforcement
PBS21	4	68	12'-2"	IX	3'-8"	2'-2"	0'-4½"	4½"				Stirrups in cap beam

PIER 14 S.B. IDENTICAL TO PIER 13 N.B.

BAR TYPES

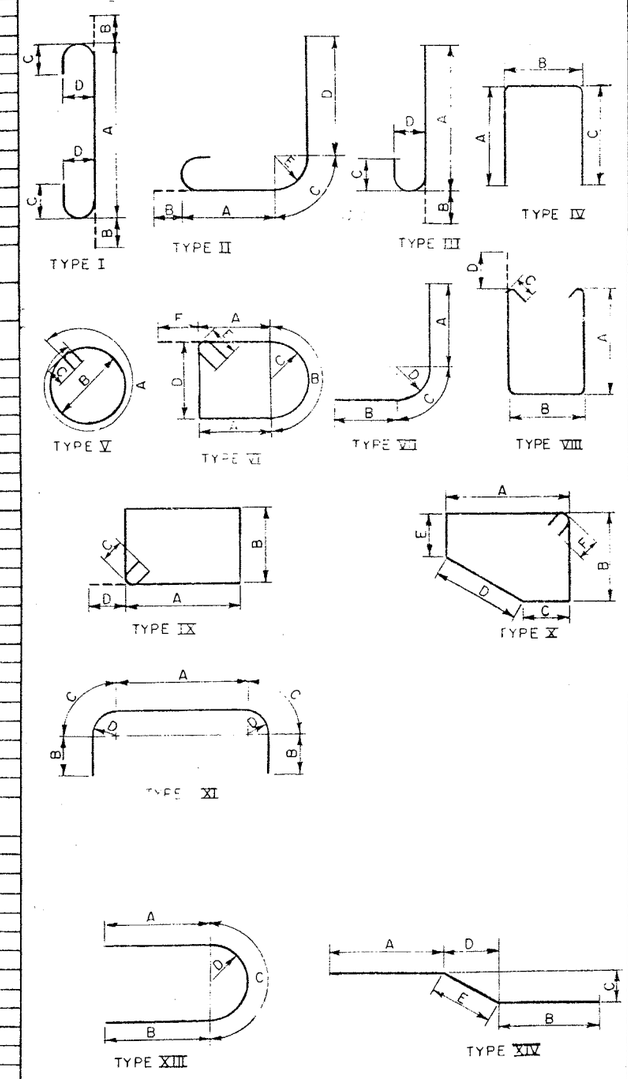

PLANS MADE
1 REVISION
2 REVISION
3 REVISION

PROJECT ENGINEER R. Fowler
IN CHARGE OF E. Eckel
DESIGNED BY
DESIGN CHECKED BY
DETAILED BY L. Everett & L. Hurt
DETAIL CHECKED BY JFD

BRIDGE NO. 2
INTERSTATE ROUTE 481 OVER DEWITT YARDS

BAR LIST # 5
DRAWING NO. 48 OF 50

FED. NO. REG. NO.	STATE	FEDERAL AID PROJECT NO.	SHEET NO.	TOTAL SHEETS
1	N.Y.	I-481-2(10)	227	309

INTERSTATE ROUTE CONNECTION 570
BUFFALO INTERCHANGE (PHASE 2)
ONONDAGA COUNTY

SOUTH ABUTMENT

MARK	SIZE	NO.	LENGTH	TYPE	A	B	C	D	E	F	G	H	I	LOCATION
AFL1	5	56	34'-4"	Str.										Longitudinal-Top & Bottom footing.
AFL2	5	28	23'-0"	Str.										Longitudinal-Top & Bottom footing.
AFL3	5	14	8'-6"	Str.										Longitudinal-Top & Bottom footing.
AFL4	5	14	9'-0"	Str.										Longitudinal-Top & Bottom footing.
AFT5	5	311	8'-6"	Str.										Transverse-Top & Bottom footing.
AFT6	7	76	8'-6"	Str.										Transverse - Bottom footing.
AWV7	5	17	3'-4"	Str.										Vertical - Wingwall.
AFV8	5	120	3'-0"	Str.										Dowels.
AWV9	7	36	12'-11"	Str.										Vertical - Wingwall.
AWV10	5	41	13'-0"	Str.										Vertical - Wingwall.
AWV11	7	36	13'-0"	Str.										Vertical - Wingwall.
ABV12	5	40	12'-0"	Str.										Backwall - Vertical.
ABV13	5	24	13'-7"	Str.										Backwall - Vertical.
ABV14	7	105	12'-0"	Str.										Backwall - Vertical.
AWH15	5	28	23'-0"	Str.										Wingwall - Horizontal.
AWH16	5	28	26'-0"	XVI	20'-0"	5'-9"	6"	6"	8½"					Wingwall - Horizontal.
AWH17	5	28	5'-8"	Str.										Curtainwall - Horizontal.
AWH18	5	20	8'-0"	Str.										Wingwall - Horizontal.
AWH19	5	10	7'-8"	Str.										Wingwall - Horizontal.
ABH20	5	56	40'-6"	Str.										Backwall - Horizontal.
ABH21	5	28	22'-3"	Str.										Backwall - Horizontal.
ABH22	5	28	22'-11"	Str.										Backwall - Horizontal.
AFV23	7	243	4'-2"	Str.										Dowels.
ABV24	5	68	4'-9"	IV	2'-3"	5½"	2'-3"							Vertical - Header.
AHL26	5	4	33'-6"	Str.										Longitudinal - Header.
AHL27	5	2	22'-3"	Str.										Longitudinal - Header (Mall).
AHL28	5	2	22'-11"	Str.										Longitudinal - Header "
ABV29	7	66	13'-7"	Str.										Backwall - Vertical.
ABV30	5	44	5'-5½"	IV	2'-3"	1'-2"	2'-3"							Header - Vertical (Mall).
AWV31	5	58	4'-6"	X	8"	3'-11"								Parapet - Vertical.
AWV32	5	58	3'-11"	Str.										Parapet - Vertical.
ACH33	5	6	23'-6"	Str.										Parapet - Horizontal (Exterior).
ACH34	5	6	25'-10"	XVI	5'-4"	19'-10"	6"	6"	8½"					Parapet - Horizontal (Exterior).
ACH35	5	6	5'-8"	Str.										Parapet - Horizontal (Exterior).
AWV36	5	18	8'-3½"	IV	3'-11"	8"	3'-11"							Curtainwall - Vertical.
ACH37	5	6	8'-4"	Str.										Parapet - Horizontal.
ACH38	5	6	8'-9"	XVI	3'-0"	5'-1"	6"	6"	8½"					Parapet - Horizontal.
ACH39	5	26	3'-8"	Str.										Parapet & Curtainwall.
APH40	5	21	10'-4"	XIII	3'-10"	3'-6"	3'-3"	0'-9"	3'-3"					Pedestal - Horizontal.
AFV41	5	24	3'-11"	Str.										Pedestal - Vertical.
APH42	5	3	10'-4"	IV	3'-10"	3'-6"	3'-3"							Horizontal - Pedestal.
FFV43	6	582	7'-3"	Str.										Pile reinforcement.

NORTH ABUTMENT

MARK	SIZE	NO.	LENGTH	TYPE	A	B	C	D	E	F	G	H	I	LOCATION
AFL1	5	40	33'-4"	Str.										Longitudinal (Top & Bottom) footing
AFL2	5	20	17'-6"	Str.										Longitudinal (T&B) outside wingwall
AFL3	5	20	8'-7"	Str.										Longitudinal (T&B) inside wingwall
AFT4	5	360	6'-0"	Str.										Transverse (T&B) footing
AFV5	5	316	2'-10"	Str.										Dowels
AFV6	5	24	4'-3"	Str.										Vertical pedestals
AWV7	5	12	Varies	Str.	Varies from 10'-9" to 11'-2" in equal incre									Vertical (Fr.) west exterior wingwall
AWV8	5	10	Varies	Str.	Varies from 9'-10" to 10'-1" in equal incre.									Vertical west interior wingwall
AWV9	5	10	Varies	Str.	Varies from 10'-10" to 11'-8" in equal incre									Vertical east interior wingwall
AWV10	5	12	Varies	Str.	Varies from 10'-2" to 10'-7" in equal incre.									Vertical east exterior wingwall
AWV11	5	16	8'-4"	IV	3'-11"	8"	3'-11"							Vertical curtainwall sidewalks
AWV12	6	50	4'-10"	IV	4'-3"	8"	0"							Vertical parapets
AWV13	6	50	4'-3"	Str.										Vertical parapets
ABV14	5	38	Varies	Str.	Varies from 8'-11" to 9'-8 in equal incre. 2 sets									Vertical backwalls
ABV15	5	24	Varies	Str.	Varies from 10'-6" to 11'-4" in equal incre.									Vertical mallwall
ABV16	5	48	6'-0"	IV	2'-6"	1'-2"	2'-6"							Vertical sidewalk on mallwall
AWH17	5	22	5'-8"	Str.										Horizontal curtainwalls
AWH18	5	22	19'-10"	XVI	14'-2"	5'-4"	6"	6"	8½"					Horizontal outside wingwall (Fr)
AWH19	5	16	16'-6"	Str.										Horizontal outside wingwall (rear)
AWH20	5	32	7'-7"	Str.										Horizontal inside wingwall (F&R)
ABH21	5	36	40'-1"	Str.										Horizontal backwall
ABH22	5	40	24'-0"	Str.										Horizontal mallwall (bottom)
APH24	5	6	10'-6"	IV	3'-3"	4'-2"	3'-3"							Horizontal facia pedestals
APH25	5	18	9'-8"	IV	3'-3"	3'-4"	3'-3"							Horizontal interior
ACH26	5	6	5'-8"	Str.										Horizontal curtainwall sidewalks
ACH27	5	6	19'-10"	XVI	14'-2"	5'-4"	6"							Horizontal outside wingwall sidewalks
ACH28	5	6	16'-6"	Str.										Horizontal outside wingwall sidewalks
ACH29	5	12	7'-6"	Str.										Horizontal inside wingwall sidewalks
ACH30	5	12	1'-8"	Str.										Horizontal inside wingwall sidewalks
ACH31	5	4	24'-0"	Str.										Horizontal mallwall sidewalks
FFV32	6	384	7'-3"	Str.										Vertical all piles
ABV33	5	90	Varies	Str.	Varies from 8'-9" to 9'-8" in equal incr. 2 sets									Vertical in backwall (Rear)
AWV34	5	22	Varies	Str.	Varies from 10'-5" to 10'-9" in equal incre.									Vertical in back of west ext. wingwall
ABV35	5	64	Varies	Str.	Varies from 10'-6" to 11'-4" in equal incre.									Vertical in back of mallwall
AWV36	5	2	11'-2"	Str.										Vertical in curtainwall (west)
ABH37	5	32	1'-8"	Str.										Horizontal in nterior curtainwalls
AWV38	5	2	10'-7"	Str.										Vertical in curtainwall (East)
AWV39	5	22	Varies	Str.	Varies from 9'-9" to 10'-3" in equal incre									Vertical in back of (East) ext wingwall
AWV40	5	4	11'-3"	Str.										Vertical in interior (East) curtain wall
AWV41	5	4	10'-6"	Str.										Verterical in interior (West) curtainwall

BAR TYPES

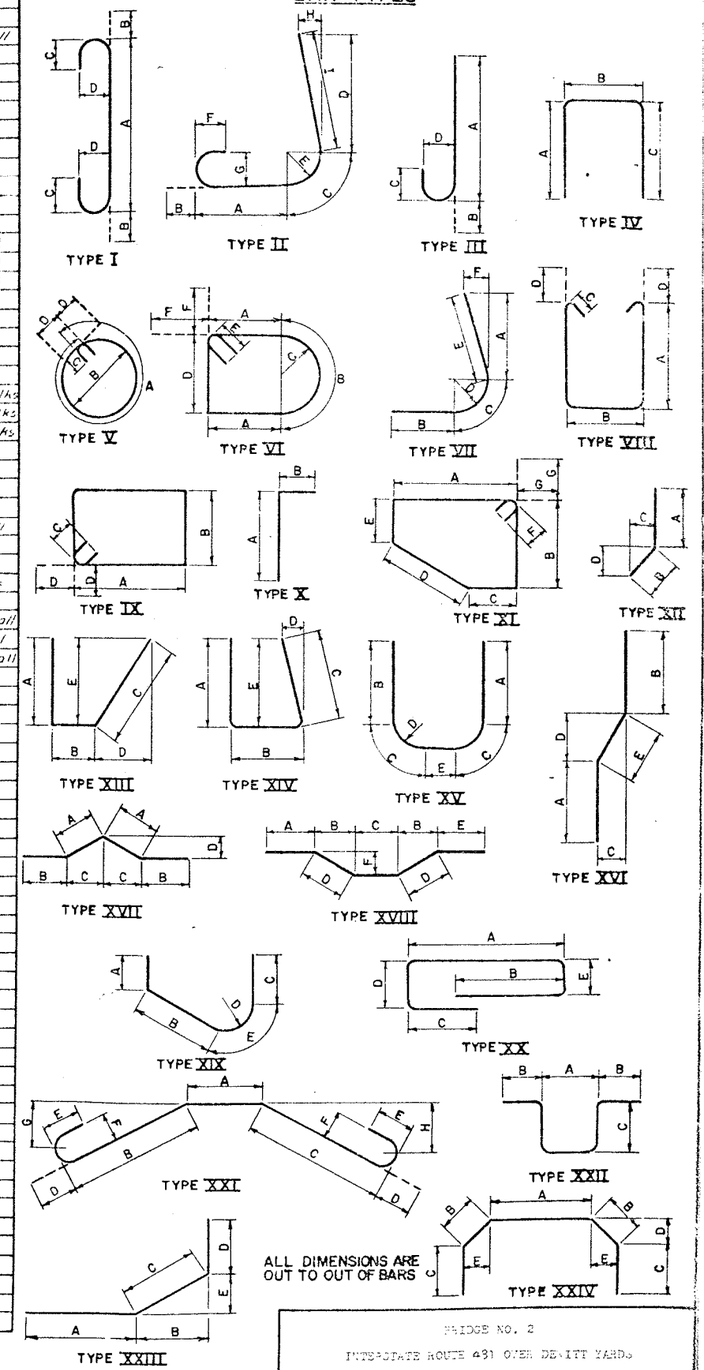

ALL DIMENSIONS ARE OUT TO OUT OF BARS

BRIDGE NO. 2
INTERSTATE ROUTE 481 OVER DEWITT YARDS

BAR LIST #6

PROJECT ENGINEER K. Marker
IN CHARGE OF F. Eckel
DESIGNED BY
DESIGN CHECKED BY
DETAILED BY A. K. Silbert
DETAIL CHECKED BY

BIN 1093571

D251438

FED. ROAD REG. NO.	STATE	FEDERAL AID PROJECT NO.	SHEET NO.
1	N.Y.	IR-481-(139) BH1-481-(179)	37

INTERSTATE ROUTE CONNECTION 570
BUTTERNUT INTERCHANGE - PHASE 2
BUTTERNUT INTERCHANGE TO COLLAMER,
SH 70-7 ONONDAGA COUNTY

DJ Hann 7/5/11
J.W. Gaggiatti 7-9-13
Pete Kuehlem 10/4/89
9/23/93
9/25/95
02/09/97
08/09/99
12/27/02
11/19/01
8/11/03 PJR 10/12/

DATE 1/24/85 — CHECKED BY — DRAFTED BY — CHECKED BY — ESTIMATED BY — CHECKED BY — DESIGNED BY — IN CHARGE OF

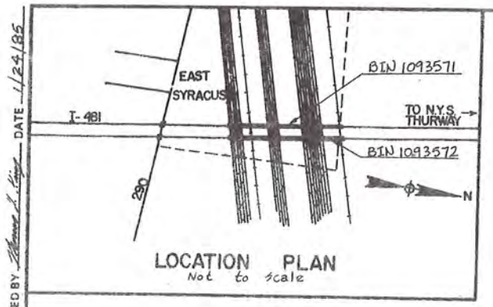

LOCATION PLAN
Not to scale

LOAD RATING	H.S. LOADING
INVENTORY	OPERATING
HS 21.7 (39T) L.F. *	HS 36.3 (65T) L.F. *

Northbound and Southbound Bridges
* L.F. = Load Factor

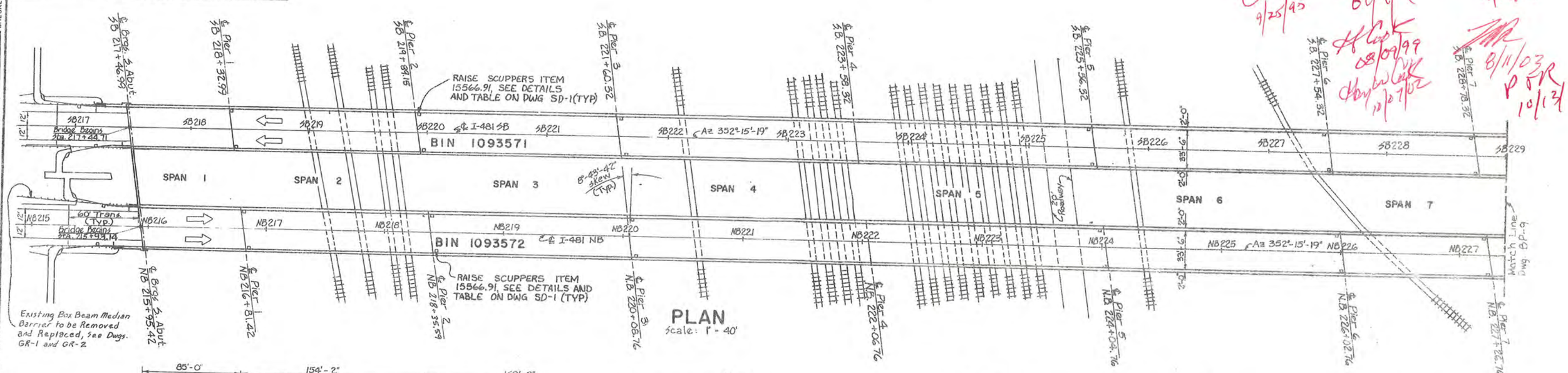

PLAN
Scale: 1" = 40'

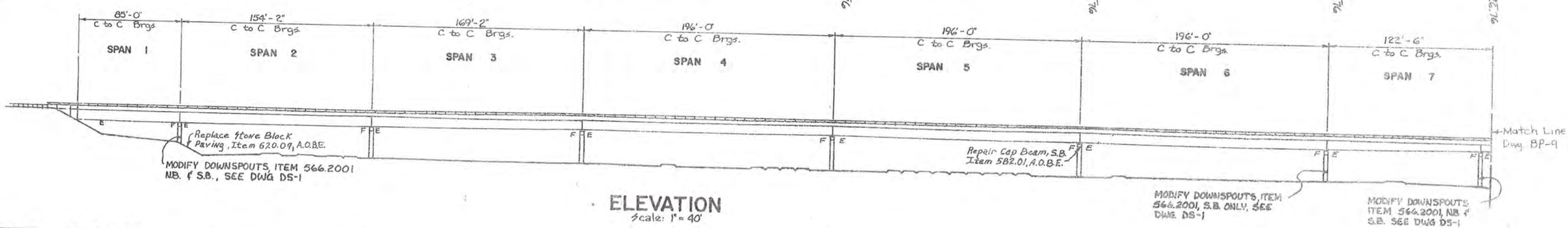

ELEVATION
Scale: 1" = 40'

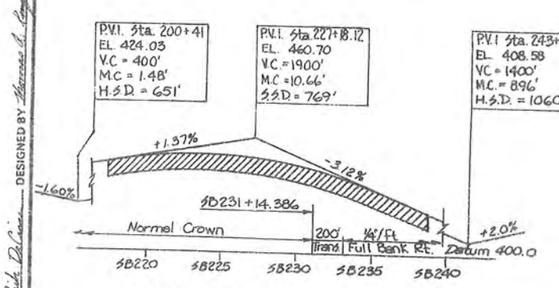

PROFILE SOUTHBOUND
Scale: Horiz. 1" = 500'
Vert. 1" = 40'

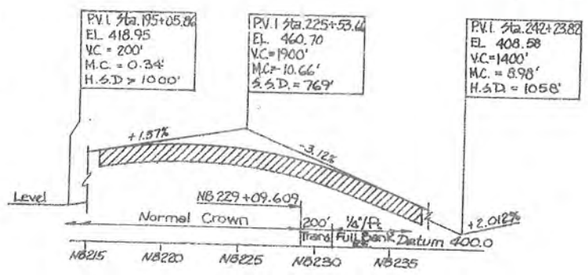

PROFILE NORTHBOUND
Scale: Horiz. 1" = 500'
Vert. 1" = 40'

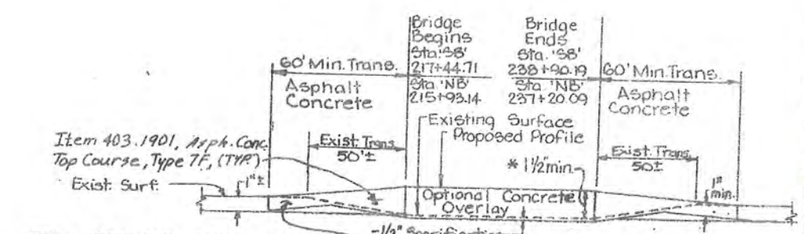

PROPOSED PROFILE
Not to Scale

AS - BUILT REVISIONS

SIGNATURE DATE

BIN 1093571 AND 1093572
SB AND NB OVER CONRAIL

STATE OF NEW YORK
DEPARTMENT OF TRANSPORTATION

DRAWING No. | SCALE | DATE

FED. ROAD REG. NO.	STATE	FEDERAL AID PROJECT NO.	SHEET NO.	TOTAL SHEETS
1	N.Y.	IR-431-(174) BHI 481-(174)	39	66

INTERSTATE ROUTE CONNECTION 570
BUTTERNUT INTERCHANGE - PHASE 2
BUTTERNUT INTERCHANGE TO COLLAMER,
SH 70-7 ONONDAGA COUNTY

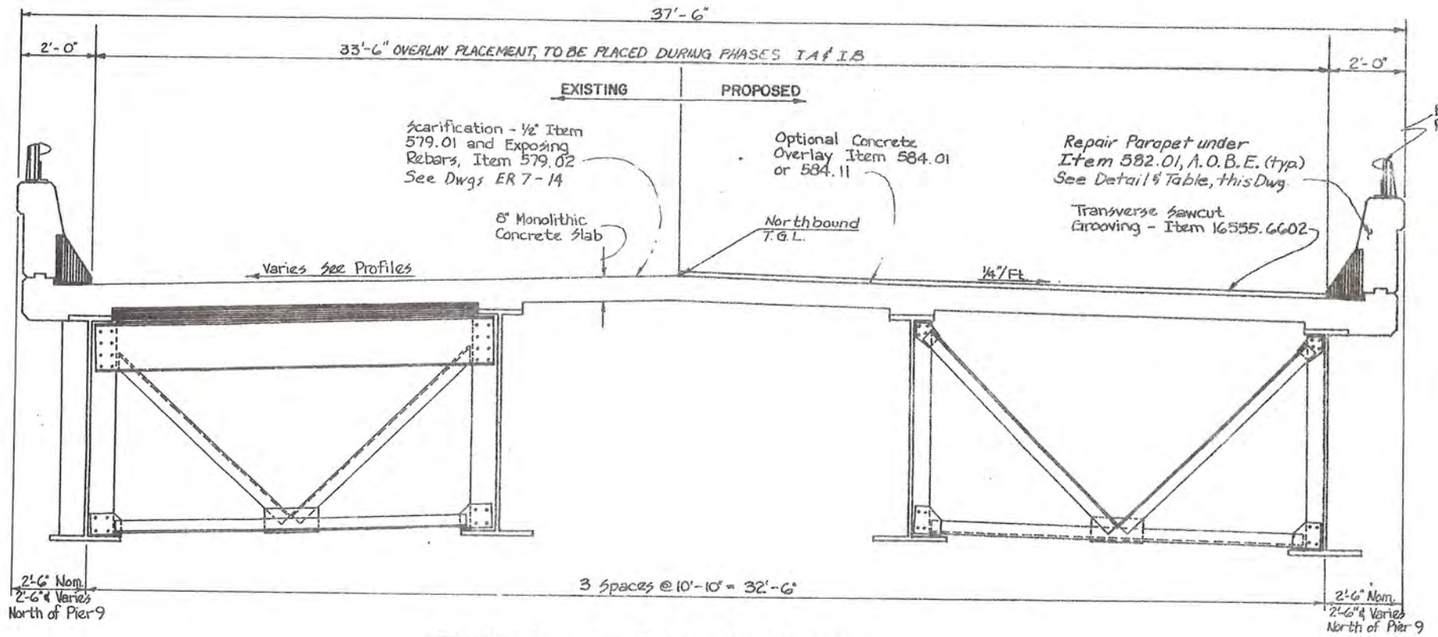

TYPICAL BRIDGE SECTION
(N.B. Bridge Looking North)
Scale: ½" = 1'-0"

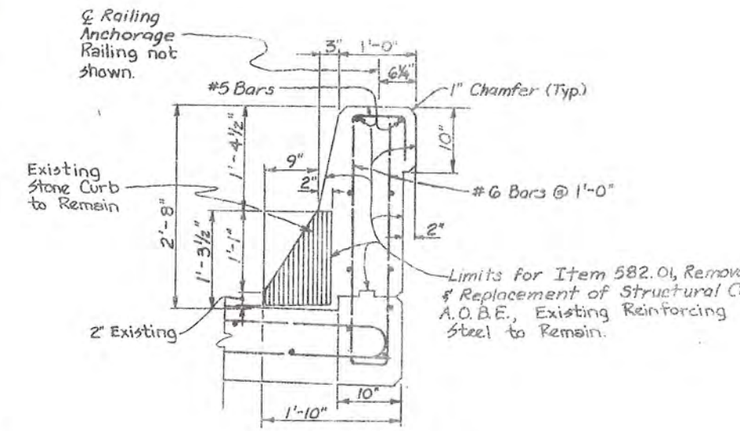

PARAPET REPAIR DETAIL
Scale: 1" = 1'-0"

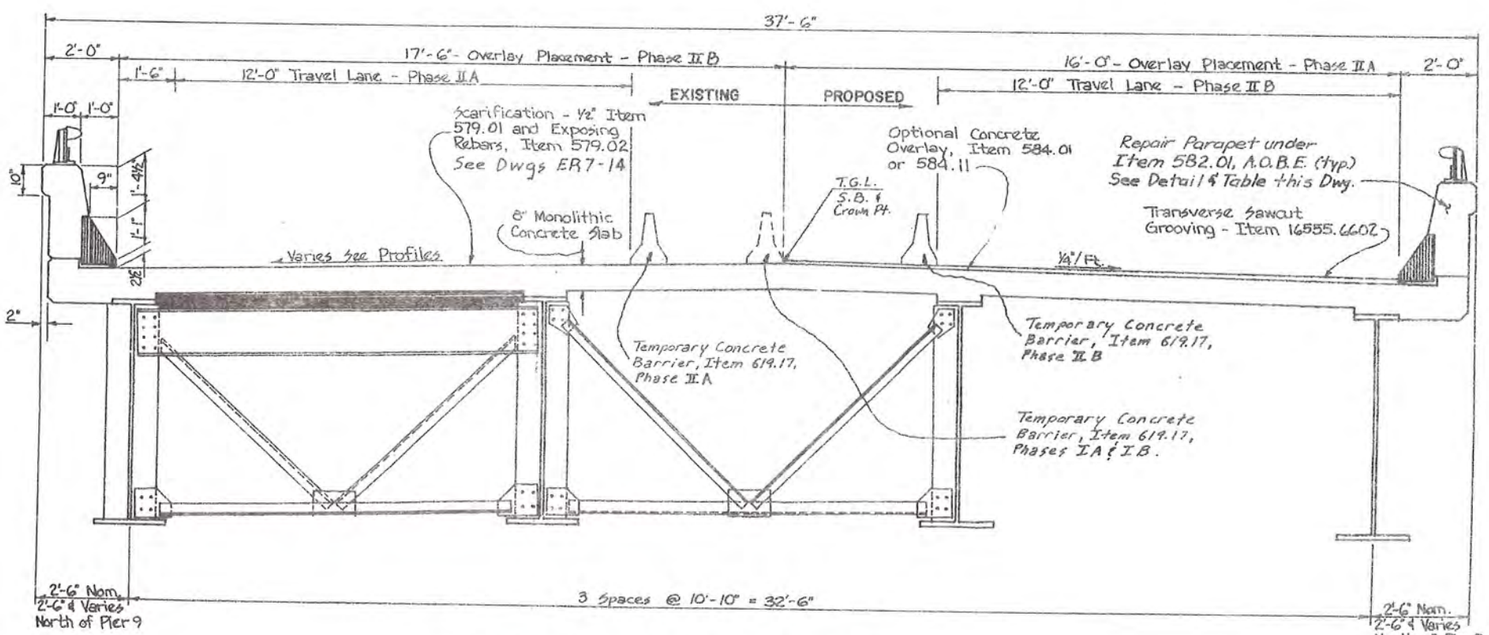

TYPICAL BRIDGE SECTION
(S.B. Bridge Looking North)
Scale: ½" = 1'-0"

REPAIR OF PARAPET WALL Item 582.01			
BIN 1093571		BIN 1093572	
SPAN #	EST. LENGTH	SPAN #	EST. LENGTH
4, Rt. Side	170 ft.	10, Rt. Side	55'
4, Lt. Side	70 ft	15, Lt. Side	20'

AS - BUILT REVISIONS

SIGNATURE DATE

BIN 1093571 AND 1093572
SB AND NB OVER CONRAIL

STATE OF NEW YORK
DEPARTMENT OF TRANSPORTATION

DRAWING No.	SCALE	DATE	REGION	SHEET NO.
BP10	As shown		3	39

DESIGNED BY ____ DRAFTED BY ____ CHECKED BY ____ CHECKED BY ____ CHECKED BY ____ ESTIMATED BY ____ DATE 4/24/85

FED. ROAD REG. NO.	STATE	FEDERAL AID PROJECT NO.	SHEET NO.	TOTAL SHEETS
1	N.Y.	1R-481-(174) BH1 481-(174)	58	66

INTERSTATE ROUTE CONNECTION 570
BUTTERNUT INTERCHANGE - PHASE 2
BUTTERNUT INTERCHANGE TO COLLAMER,
SH 70-7 ONONDAGA COUNTY

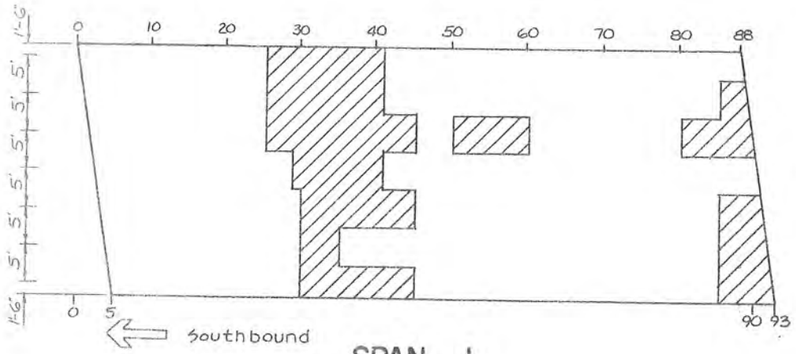

SPAN 1

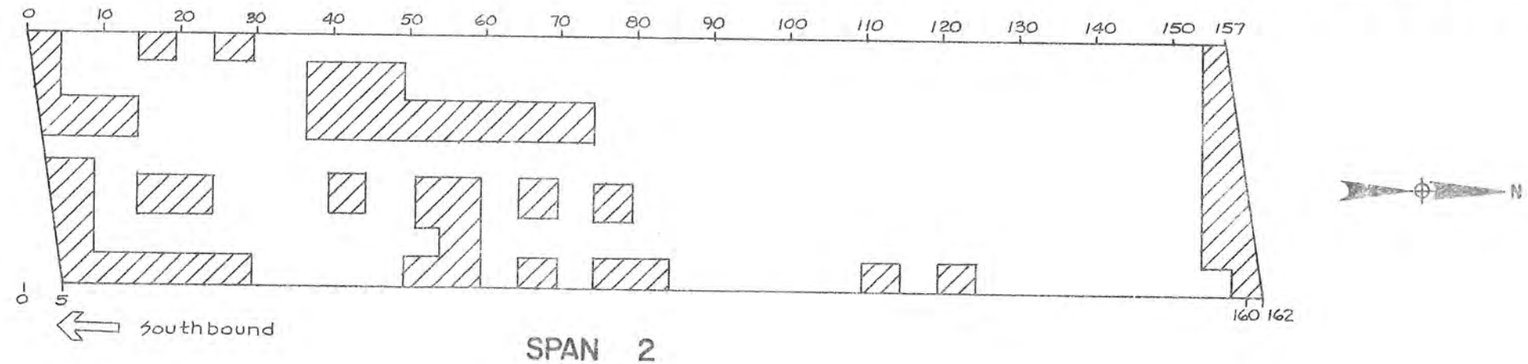

SPAN 2

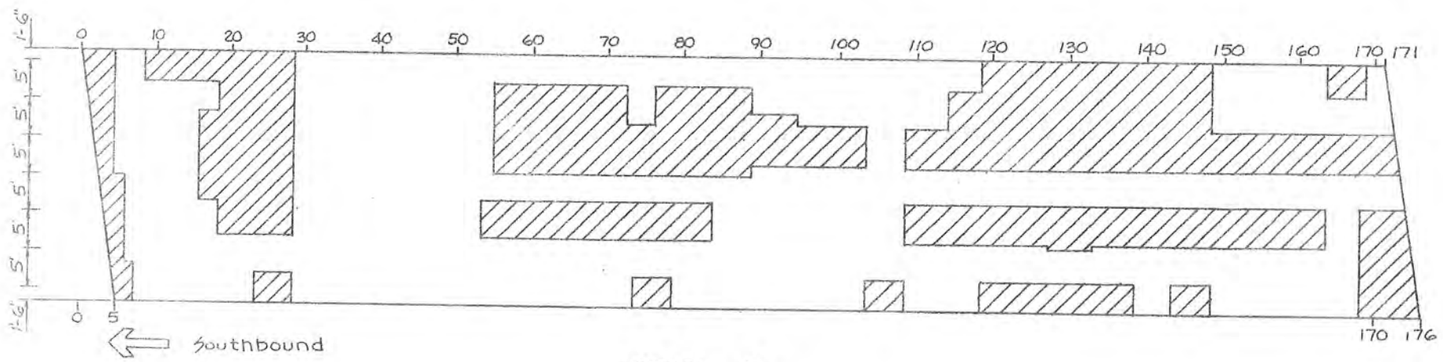

SPAN 3

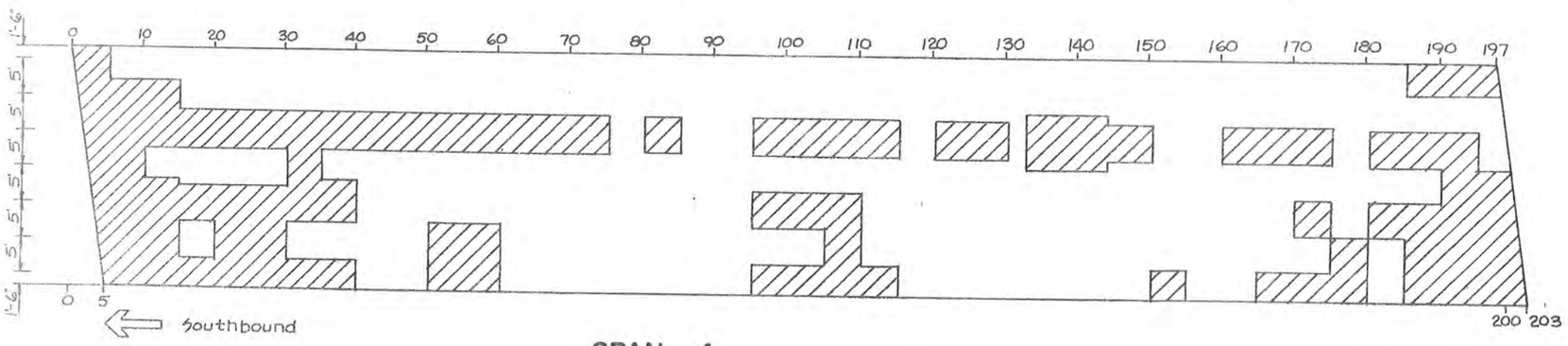

SPAN 4

Approximate Area for Exposing Reinforcing Bars, Item 579.02

AS - BUILT REVISIONS

SIGNATURE DATE

BIN 1093571 I-481 SOUTHBOUND OVER CONRAIL

STATE OF NEW YORK
DEPARTMENT OF TRANSPORTATION

DRAWING No.	SCALE	DATE	REGION	SHEET NO.
ER-7			3	58

D251436

FED. ROAD REG. NO.	STATE	FEDERAL AID PROJECT NO.	SHEET NO.	TOTAL SHEETS
1	N.Y.	IR-481-2(19) BH11-481-01	60	66

INTERSTATE ROUTE CONNECTION 570
BUTTERNUT INTERCHANGE - PHASE 2
BUTTERNUT INTERCHANGE TO COLLAMER,
SH 70-7 ONONDAGA COUNTY

N

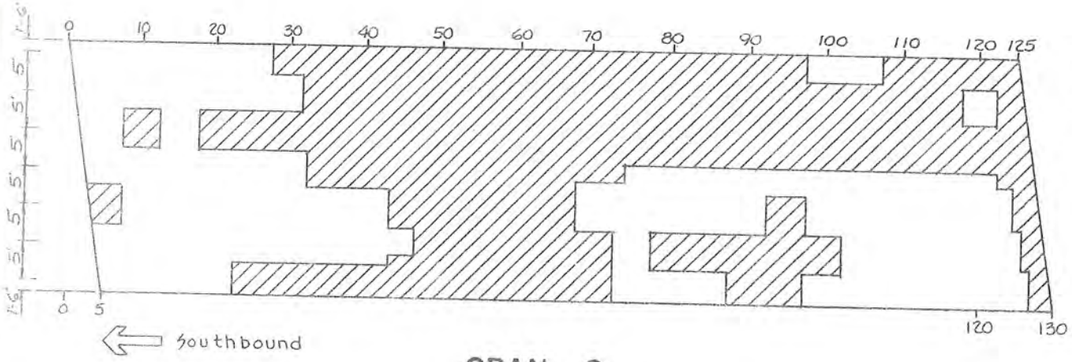

SPAN 9

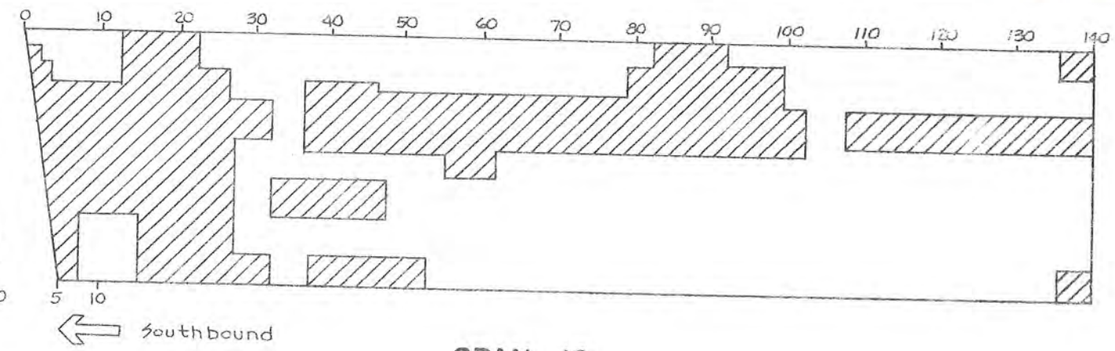

SPAN 10

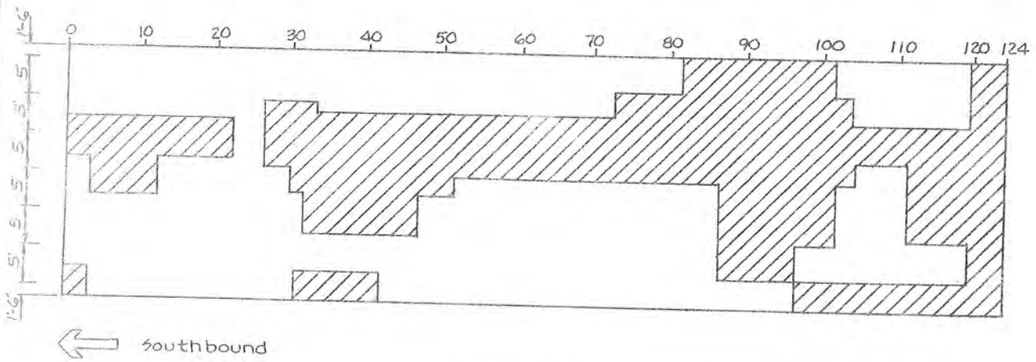

SPAN 11

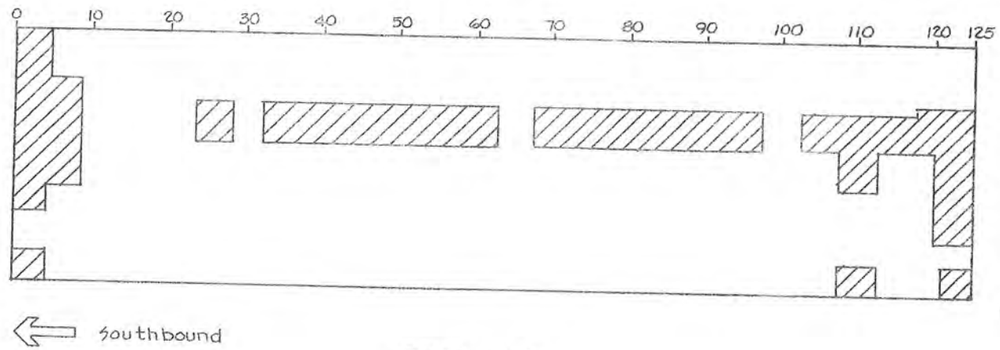

SPAN 12

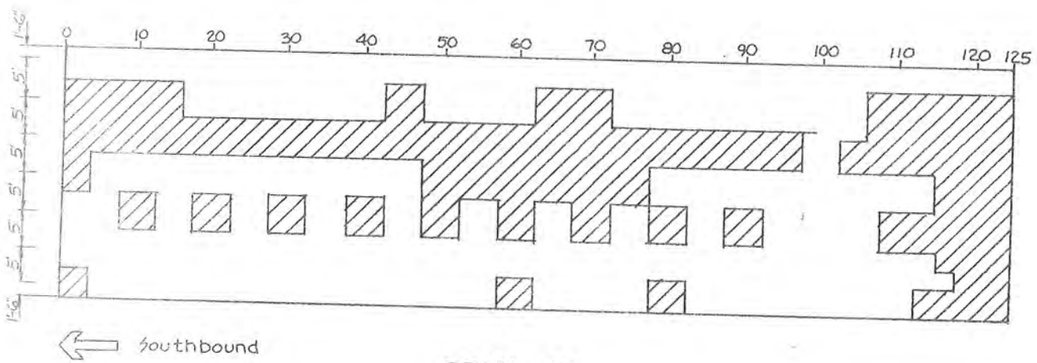

SPAN 13

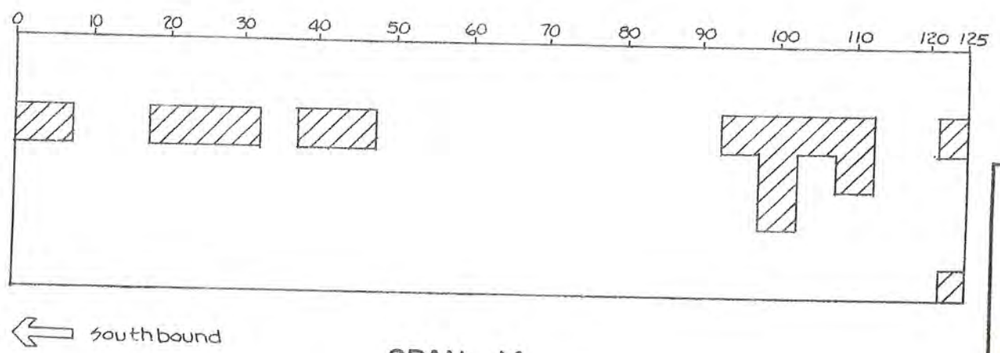

SPAN 14

Approximate Area for Exposing Reinforcing Bars, Item 579.02

AS - BUILT REVISIONS

SIGNATURE DATE

BIN 1093571 I-481 SOUTHBOUND OVER CONRAIL

STATE OF NEW YORK
DEPARTMENT OF TRANSPORTATION

DRAWING No.	SCALE	DATE	REGION	SHEET NO.
ER-9			3	60

D251436

FED. ROAD REG. NO.	STATE	FEDERAL AID PROJECT NO.	SHEET NO.
1	N.Y.	IR-481-(174) BH1-481-(174)	59

INTERSTATE ROUTE CONNECTION 570
BUTTERNUT INTERCHANGE - PHASE 2
BUTTERNUT INTERCHANGE TO COLLAME
SH 70-7 ONONDAGA COUNTY

N

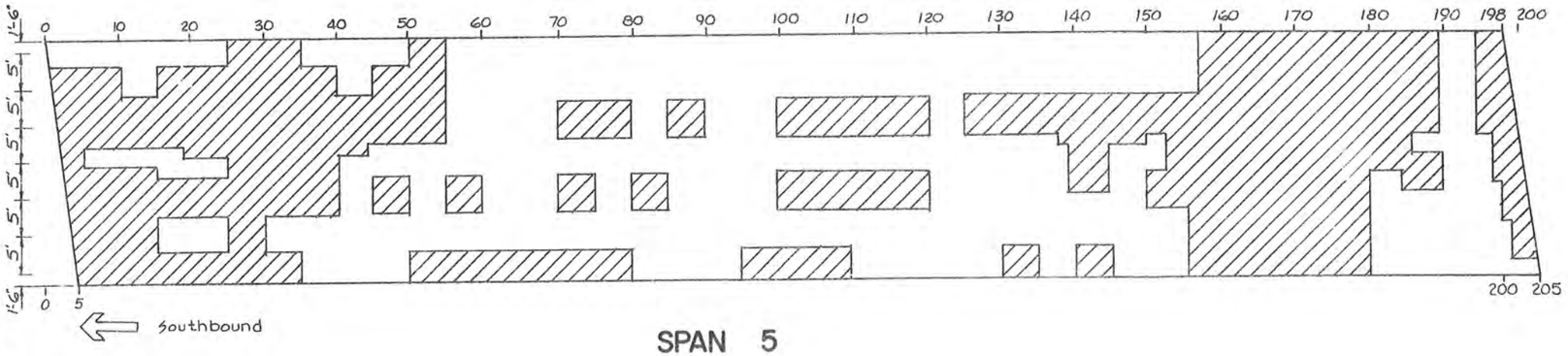

SPAN 5

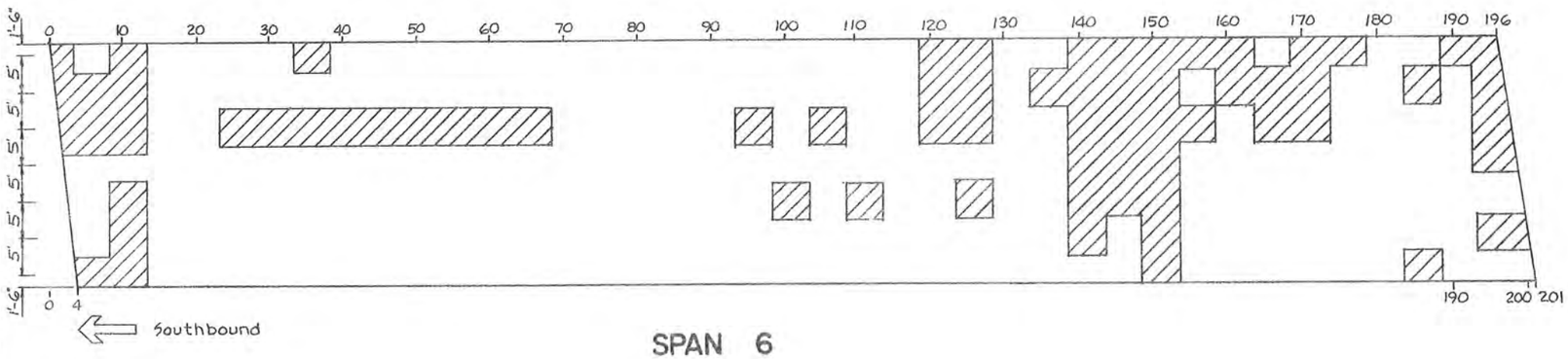

SPAN 6

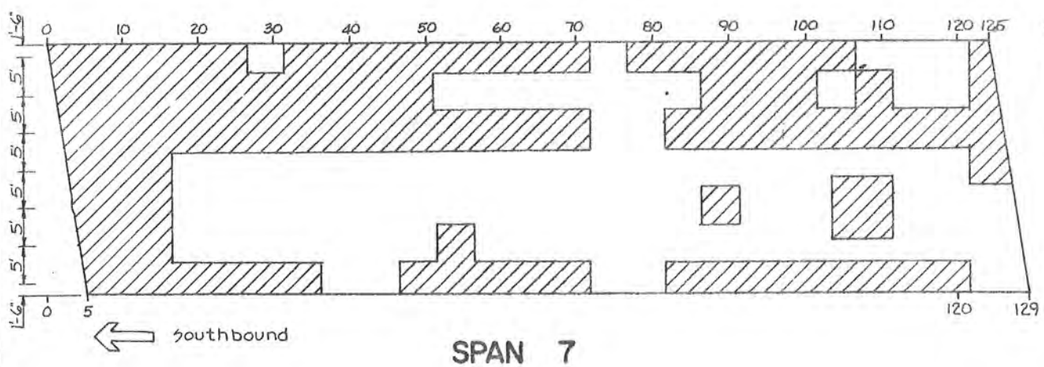

SPAN 7

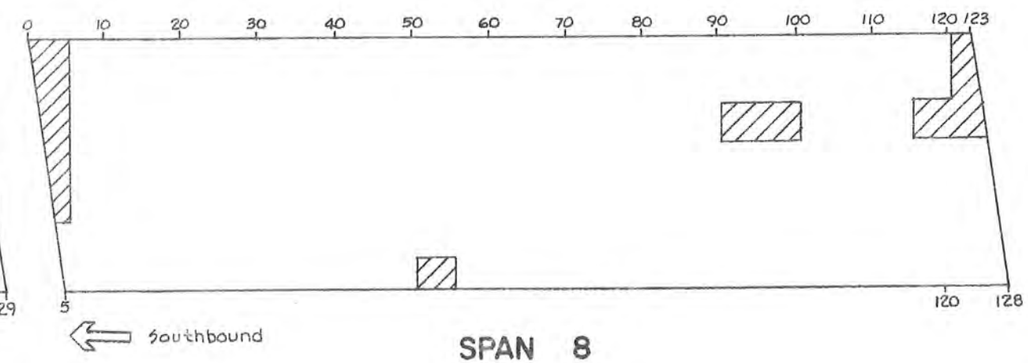

SPAN 8

Approximate Area for Exposing Reinforcing Bars, Item 579.02

AS - BUILT REVISIONS

SIGNATURE DATE

BIN 1093571 I-481 SOUTHBOUN OVER CONRAIL

STATE OF NEW YORK
DEPARTMENT OF TRANSPORTATIC

DRAWING No. | SCALE | DATE

DATE 1/24/85 CHECKED BY DRAFTED BY CHECKED BY ESTIMATED BY DESIGNED BY CHECKED BY

7-2 (5/76)
ARGE OF

D251438

FED. ROAD REG. NO.	STATE	FEDERAL AID PROJECT NO.	SHEET NO.
1	N.Y.	IR-431-(170) BHI-481-(176)	61

INTERSTATE ROUTE CONNECTION 570
BUTTERNUT INTERCHANGE - PHASE 2
BUTTERNUT INTERCHANGE TO COLLAME
SH 70-7 ONONDAGA COUNTY

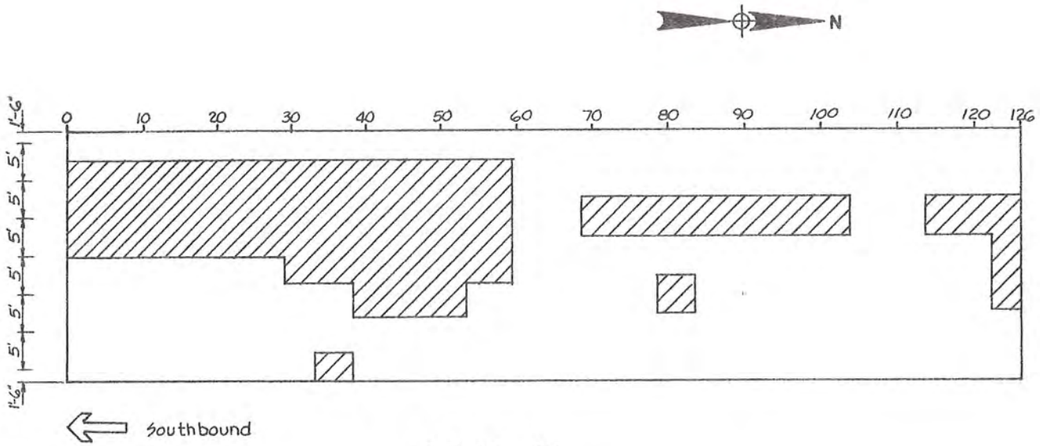

SPAN 15

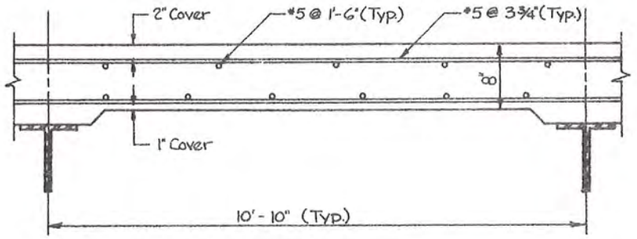

TOP BAR REINFORCEMENT
Not to Scale

Approximate Area for Exposing Reinforcing Bars, Item 579.02

AS - BUILT REVISIONS

SIGNATURE DATE

BIN 1093571 I-481 SOUTHBOUN
OVER CONRAIL

STATE OF NEW YORK
DEPARTMENT OF TRANSPORTATIO

DRAWING No.	SCALE	DATE	REGION	SH
ER-10			3	

HC 47-2 (5/76)
IN CHARGE OF Robert D. Crisci DESIGNED BY Thomas A. Hogan CHECKED BY Robert D. Crisci ESTIMATED BY Thomas A. Hogan CHECKED BY DRAFTED BY CHECKED BY DATE 11/24/85

3/3 1093572

New Joints; Repair Conc. Elements; Spot Deck Repairs; Bearing Restoration; Scupper work; Parapet Repairs.

2003

D259214

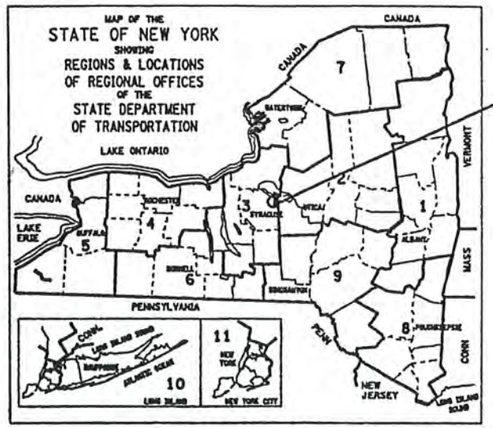

STATE OF NEW YORK
DEPARTMENT OF TRANSPORTATION
OFFICE OF ENGINEERING

BRIDGE REHABILITATION PROJECT (ELEMENT SPECIFIC)
VARIOUS BRIDGES ON INTERSTATE 481
TOWNS OF DEWITT AND CICERO

VOLUME 1 OF 2

THIS IS A BRIDGE REHABILITATION PROJECT ON VARIOUS BRIDGES ON INTERSTATE 481, LOCATED IN THE TOWNS OF CICERO AND DEWITT IN ONONDAGA COUNTY. THIS WORK CONSISTS OF BRIDGE JOINTS, BEARINGS, BRIDGE RAIL AND CONCRETE REPAIR OF SUBSTRUCTURES. THERE ARE 28 BRIDGES IN THE PROJECT BEGINNING AT REFERENCE MARKER 481I-3301-1000 SOUTH OF THE CITY OF SYRACUSE AND ENDING AT REFERENCE MARKER 481I-3301-2143. I481 INTERCHANGE NORTH OF THE CITY.

432 SHEETS ONONDAGA COUNTY CONTRACT D259214

F.A. PROJECT

STANDARD SHEETS

M203-4, M203-5, M203-6R1, M603-1
M606-32, M606-33, M606-34,
M619-3R1, M619-4, M619-5
M685-1, M685-2R1, M685-3R1
M685-4R1, M685-5R1, M403-1, M203-4,
M203-5, M203-6R1, M603-1

Bruce Gosselin 6/26/2009
D.J. Hann 7/5/11
J.W. Gonyprakis 7-9-13

ALL WORK CONTEMPLATED UNDER THIS CONTRACT IS TO BE COVERED BY AND IN CONFORMITY WITH THE STANDARD SPECIFICATIONS (METRIC UNITS) OF JANUARY 2, 2002, AS AMENDED BY ADDENDA NOS. 1 AND 2, EXCEPT AS MODIFIED ON THESE PLANS AND IN THE ITEMIZED PROPOSAL.

CONTRACTOR'S NAME _____
AWARD DATE _____
COMPLETION DATE _____
FINAL ACCEPTANCE DATE _____
REGIONAL DIRECTOR _____
ENGINEER IN CHARGE _____
FINAL COST TOTAL _____

FISCAL SHARE COST(S)

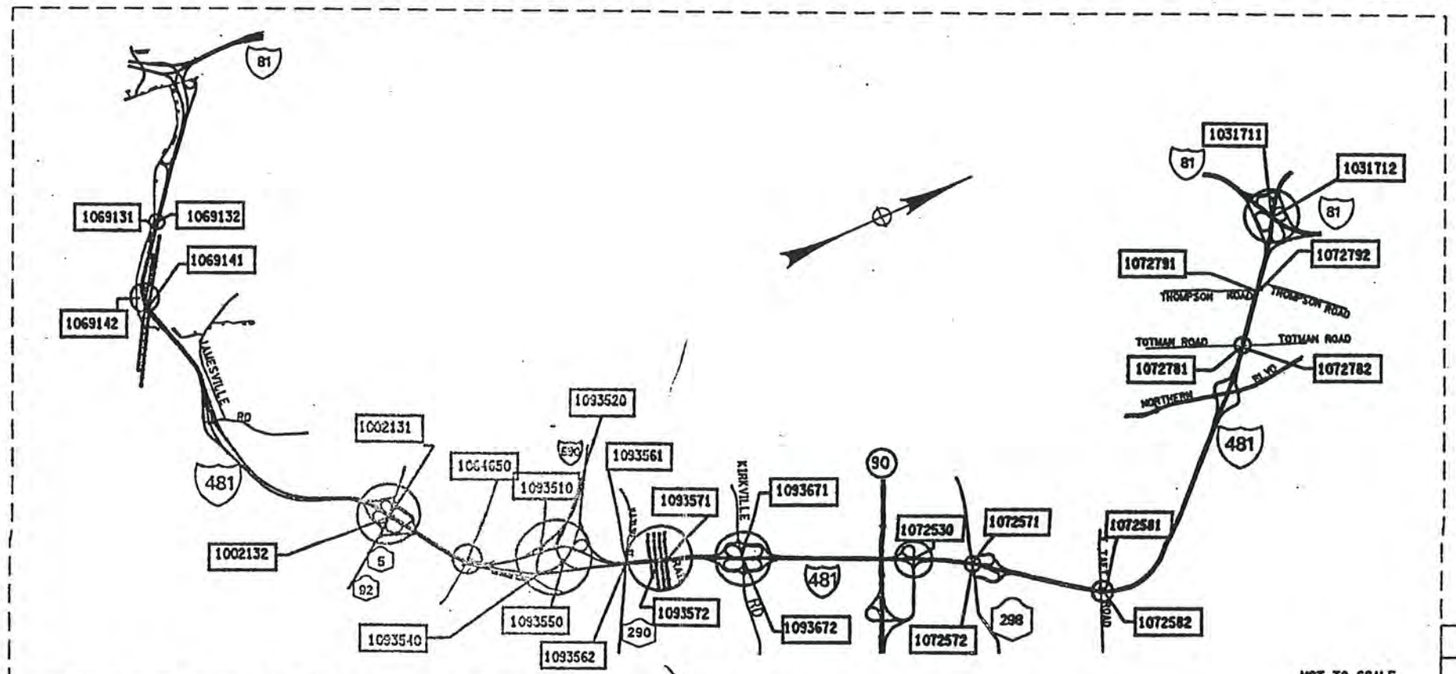

NOT TO SCALE

PROJECT LOCATION

BRIDGE REHAB. PROJ.- ELEMENT SPECIFIC			
VARIOUS BRIDGES ON INTERSTATE 481			
TOWNS OF DEWITT AND CICERO			
ONONDAGA COUNTY			
FED. ROAD REG. NO.	STATE	SHEET NO.	TOTAL SHEETS
1	N.Y.	1	432
FEDERAL AID PROJECT NO.			
CAPITAL PROJECT IDENTIFICATION NO. 3056.13			
INDEX ON SHEET NO. 5 & 6			

RECOMMENDED BY John E. Fritz 9/04/02
REGIONAL DESIGN ENGINEER DATE

RECOMMENDED BY Myron A. Dunlap 9/4/02
REGIONAL CONSTRUCTION ENGINEER DATE

RECOMMENDED BY 9/04/02
REGIONAL TRANSPORTATION MAINTENANCE ENGINEER DATE

RECOMMENDED BY 9-4-02
REGIONAL TRAFFIC ENGINEER DATE

APPROVED BY 09-04-02
REGIONAL DIRECTOR DATE

DESIGN SUPERVISOR Clement J. Nick JOB MANAGER Nick DeCirce DESIGNED BY Alan Hughes CHECKED BY Alan Hughes ESTIMATED BY Bruce Wagner DRAFTED BY Chris Spoor CHECKED BY Alan Hughes

FED ROAD REG. NO.	STATE	CONTRACT NO.	SHEET NO.	TOTAL SHEETS
1	N.Y.	D259214	5	432

BRIDGE REHABILITATION PROJECT (ELEMENT SPECIFIC)
VARIOUS BRIDGES ON INTERSTATE 481
TOWNS OF DEWITT AND CICERO
ONONDAGA COUNTY
P.I.N. 305613 B.I.N. ALL BINS

INDEX

SHEET NO.	DESCRIPTION	DRAWING NO.
1	TITLE SHEET	COVER
2,3,4	ESTIMATE OF QUANTITIES	
5,6	INDEX	IDX-1 - IDX-2
7-155	MAINTENANCE AND PROTECTION OF TRAFFIC	MPT-1 - MPT-149
156	CROSSOVER TYPICAL SECTION	CTS-1
157-160	CROSSOVER SURVEY CONTROL DATA	HC-1 - HC-4
161-166	CROSSOVER PLANS	CPL-1 - CPL-6
167-174	CROSSOVER PROFILES	CPR-1 - CPR-8
175-177	CROSSOVER MISC. DETAILS	CMD-1 - CMD-3
178-179	CROSSOVER MISC. TABLES	CMT-1 - CMT-2
180-191	ESTIMATE OF QUANTITIES BY STRUCTURE	QE-1A - QE-4C
192	GENERAL NOTES	GN-1
193	BIN 1002131, I481SB/RT. 5, PLAN AND ELEVATION	GP1-1
194	BIN 1002131, TYPICAL BRIDGE SECTION AND PROFILE	TS1-1
195-197	BIN 1002131, SOUTH ABUTMENT (SB)	AB1-1 - AB1-3
198-199	BIN 1002131, NORTH ABUTMENT (SB), SHEET PILING LAYOUT	AB1-4 - AB1-5
200-201	BIN 1002131 PIER 1 & PIER 2 SB REMOVAL DETAILS	PR1-1 & PR1-2
202	BIN 1002131, PEDESTAL REPLACEMENT	PR1-3
203	BIN 1002131, BOLSTER DETAILS	PR1-4
204	BIN 1002131, ANCHOR BOLT LAYOUT (SB)	PR1-5
205	BIN 1002132, I481NB/RT. 5, PLAN AND ELEVATION	GP2-1
206-207	BIN 1002132, TYPICAL BRIDGE SECTION AND PROFILE, APPROACH SECTION	TS2-1 & TS2-2
208-213	BIN 1002132, SOUTH ABUTMENT (NB)	AB2-1 - AB2-6
214-219	BIN 1002132, NORTH ABUTMENT (NB)	AB2-7 - AB2-12
220-221	BIN 1002132, PIERS (NB)	PR2-1 & PR2-2
222	BIN 1002132, PEDESTAL REPLACEMENT (NB)	PR2-3
223	BIN 1002132, BOLSTER DETAILS (NB)	PR2-4
224	BIN 1002132, ANCHOR BOLT LAYOUT (NB)	PR2-5
225	BIN 1031711 AND 1031712, I-481/I-81, PLAN AND ELEVATION	GP3-1
226	BIN 1031711 & 1031712, TYPICAL BRIDGE SECTION AND PROFILE	TS3-1
227	BIN 1031711, EAST ABUTMENT (SB) PLAN & ELEVATION	AB3-1
228	BIN 1031711, WEST ABUTMENT (SB) PLAN & ELEVATION	AB3-2
229	BIN 1031712, EAST ABUTMENT (NB) PLAN & ELEVATION	AB3-3
230	BIN 1031712, WEST ABUTMENT (NB) PLAN & ELEVATION	AB3-4
231	BIN 1031711 & 1031712, APPROACH SLABS	AS3-1
232	BIN 1064650, KINNE RD/I-481, PLAN, ELEVATION, AND BRIDGE SECTION	GP4-1
233	BIN 1069131 & 1069132, I-481/QUARRY DRIVEWAY, PLAN AND ELEVATION	GP5-1
234	BIN 1069131 & 1069132, TYPICAL BRIDGE SECTION AND PROFILE AND BRIDGE SECTION	TS5-1
235	BIN 1069131, WEST ABUTMENT (SB) PLAN & ELEVATION	AB5-1
236	BIN 1069131, EAST ABUTMENT (SB) PLAN & ELEVATION	AB5-2
237	BIN 1069132, EAST ABUTMENT (NB) PLAN & ELEVATION	AB5-3
238-239	BIN 1069141 & 1069142, I-481/NYS + W RAILROAD, GENERAL PLAN AND ELEVATION	GP6-1 - GP6-2
240-241	BIN 1069141 & 1069142, TYPICAL BRIDGE SECTION AND PROFILES	TS6-1 & TS6-2
242	BIN 1069141, WEST ABUTMENT (SB) PLAN & ELEVATION	AB6-1
243	BIN 1069141, EAST ABUTMENT (SB) PLAN & ELEVATION	AB6-2
244	BIN 1069142, WEST ABUTMENT (NB) PLAN & ELEVATION	AB6-3
245	BIN 1069142, EAST ABUTMENT (NB) PLAN & ELEVATION	AB6-4

INDEX (CONTINUED)

SHEET NO.	DESCRIPTION	DRAWING NO.
246	BIN 1072530, RAMP TO I-481/I-481, PLAN, ELEVATION AND BRIDGE SECTION	GP7-1
247-248	BIN 1072530, EAST ABUTMENT	AB7-1 - AB7-2
249	BIN 1072571 & BIN 1072572, I-481/ROUTE 298 PLAN AND ELEVATION AND BRIDGE SECTION	GP8-1
250	BIN 1072571 & BIN 1072572, TYPICAL BRIDGE SECTION AND PROFILE	TS8-1
251	BIN 1072571, SOUTH ABUTMENT (SB) PLAN & ELEVATION	AB8-1
252	BIN 1072571, NORTH ABUTMENT (SB) PLAN & ELEVATION	AB8-2
253	BIN 1072572, SOUTH ABUTMENT (NB) PLAN & ELEVATION	AB8-3
254	BIN 1072581 & BIN 1072582, I-481/TAFT ROAD, PLAN AND ELEVATION	GP9-1
255	BIN 1072581 & 1072582, TYPICAL BRIDGE SECTION AND PROFILE	TS9-1
256-257	BIN 1072581, SOUTH ABUTMENT AND NORTH ABUTMENT (SB)	AB9-1 & AB9-2
258-259	BIN 1072582, SOUTH ABUTMENT AND NORTH ABUTMENT (NB)	AB9-3 & AB9-4
260	BIN 1072781 & BIN 1072782, I-481/TOTMAN ROAD, PLAN, ELEVATION AND BRIDGE SECTION	GP10-1
261	BIN 1072781 & BIN 1072782 TYPICAL BRIDGE SECTION AND PROFILE	TS10-1
262-263	BIN 1072781, EAST ABUTMENT (SB) PLAN & ELEVATION	AB10-1 & AB10-2
264	BIN 1072782, WEST ABUTMENT (NB) PLAN & ELEVATION	AB10-3
265	BIN 1072781, APPROACH SLABS	AS10-1
266	BIN 1072791 & BIN 1072792, I-481/ THOMPSON ROAD, PLAN, ELEVATION AND BRIDGE SECTION	GP11-1
267	BIN 1072791 & BIN 1072792 TYPICAL BRIDGE SECTIONS AND PROFILE	TS11-1
268	BIN 1072791, EAST & WEST ABUTMENTS (SB)	AB11-1
269	BIN 1072791, APPROACH SLAB (SB)	AS11-1
270	BIN 1093510, I-690 RAMP/ I-481SB, PLAN, ELEVATION, AND BRIDGE SECTION	GP12-1
271	BIN 1093510, WEST ABUTMENT PLAN & ELEVATION	AB12-1
272	BIN 1093520, WN LINE OVER INTERSTATE 481 SB, PLAN, ELEVATION, AND BRIDGE SECTION	GP13-1
273	BIN 1093520, WEST ABUTMENT PLAN & ELEVATION	AB13-1
274	BIN 1093540, I-690 EB/ I-481 NB RAMP, PLAN, ELEVATION, AND BRIDGE SECTION	GP14-1
275	BIN 1093540 TYPICAL BRIDGE SECTION AND PROFILE	TS14-1
276	BIN 1093540, WEST ABUTMENT	AB14-1
277	BIN 1093550, I-481 NB/WB CONNECTOR, PLAN, ELEVATION, AND BRIDGE SECTION	GP15-1
278	BIN 1093550, SOUTH ABUTMENT, NB PLAN & ELEVATION	AB15-1
279	BIN 1093550, NORTH ABUTMENT, NB PLAN & ELEVATION	AB15-2
280	BIN 1093561 & 1093562, I-481/ROUTE 290, PLAN, ELEVATION AND BRIDGE SECTION	GP16-1
281	BIN 1093561 & 1093562 TYPICAL BRIDGE SECTION AND PROFILE	TS16-1
282	BIN 1093561, SOUTH ABUTMENT (SB) PLAN & ELEVATION	AB16-1
283	BIN 1093562, SOUTH ABUTMENT (NB) PLAN & ELEVATION	AB16-2
284-287	BIN 1093571 & BIN 1093572, I-481/CSX RAILROAD YARD, PLAN & ELEVATION	GP17-1 - GP17-4
288	BIN 1093571 AND BIN 1093572, TYPICAL BRIDGE SECTION AND PROFILES	TS17-1
289-293	BIN 1093571 AND BIN 1093672, DRAINAGE DETAILS	DD17-1 - DD17-5
294-296	BIN 1093571 AND BIN 1093672, SCUPPER EXTENSIONS	DD17-6 - DD17-8
297-314	BIN 1093571, PIERS 1-14, (SB)	PR17-1S - PR17-18S
315	BIN 1093572, SOUTH ABUTMENT (NB)	AB17-1
316-329	BIN 1093572, PIERS 1-14 (NB)	PR17-1N - PR17-14N
330-331	BIN 1093571 AND 1093572, PARAPET REPAIR DETAILS	PW17-1 & PW17-2
332	BIN 1093572, BRIDGE DECK REPAIRS	DR17-1

ALL DIMENSIONS ARE IN m UNLESS OTHERWISE NOTED

AS BUILT REVISIONS

SIGNATURE DATE

INTERSTATE 481
REHABILITATION PROJECT

INDEX

STATE OF NEW YORK
DEPARTMENT OF TRANSPORTATION

FILENAME	REGION	DATE	DRAWING NO.
305613AAJL2A	3	10/02	IDX-1

CHECKED BY
DRAFTED BY
ESTIMATED BY
CHECKED BY
DESIGNED BY

FED ROAD REG. NO.	STATE	CONTRACT NO.	SHEET NO.	TOTAL SHEETS
1	N.Y.	D259214	6	432

BRIDGE REHABILITATION PROJECT (ELEMENT SPECIFIC)
VARIOUS BRIDGE ON INTERSTATE 481
TOWN OF DEWITT AND CICERO
ONONDAGA COUNTY
P.I.N. 305613 B.I.N. VARIOUS

INDEX (CONTINUED)

SHEET NO.	DESCRIPTION	DRAWING NO.
333	BIN 1093671 & 1093672, I-481/KIRKVILLE ROAD, PLAN, ELEVATION AND BRIDGE SECTION	GP18-1
334	BIN 1093671 & BIN 1093672 TYPICAL BRIDGE SECTION AND PROFILE	TS18-1
335-336	BIN 1093671, SOUTH ABUTMENT (SB) PLAN, ELEVATION AND SECTIONS	AB18-1 - AB18-2
337	BIN 1093671, NORTH ABUTMENT (SB) PLAN & ELEVATION	AB18-3
338-339	BIN 1093672, SOUTH ABUTMENT (NB) PLAN, ELEVATION AND SECTIONS	AB18-4 - AB18-5
340	BIN 1093672, NORTH ABUTMENT (NB) PLAN & ELEVATION	AB18-6
341-342	BIN 1002131, BIN 1002132 & BIN 1093571, MULTIROTATIONAL BEARINGS	BR-1 & BR-2
343	BIN 1002131, BEARING RESTORATION DETAILS	BR-3
344	BINS 1069131 & 1069132, BEARING RESTORATION DETAILS	BR-4
345-346	BIN 1069141 & BIN 1069142, BEARING RESTORATION DETAIL	BR-5 & BR-6
347	BIN 1072530, BEARING RESTORATION DETAILS	BR-7
348	BIN 1072791 AND BIN 1072792 BEARING RESTORATION DETAILS	BR-8
349	BIN 1093550, BEARING RESTORATION DETAILS	BR-9
350-351	BINS 1093751 & 1093572, BEARING RESTORATION DETAILS	BR-10 & BR-11
352	BIN 1072781 BEARING RESTORATION DETAILS	BR-12
	RAILING DETAILS	
353-355	BIN 1002131 & BIN 1002132, RAILING DETAILS	RD-1 - RD-3
356-358	BIN 1069141 & BIN 1069142, RAILING DETAILS	RD-4 - RD-6
359-360	RAILING DETAILS	RD-7 - RD-8
	BRIDGE JOINTS	
361-364	BRIDGE JOINT TABLE	JT-1 - JT-4
365	COMPRESSION SEAL JOINT DETAIL (ALL BRIDGES)	JD-1
366-370	BIN 1002131, JOINT DETAILS	JD-2 - JD-6
371-375	BIN 1002132, JOINT DETAILS	JD-7 - JD-11
376-377	BIN 1031711 & BIN 1031712, JOINT DETAILS	JD-12 - JD-13
378-383	BIN 1064650, JOINT DETAILS	JD-14 - JD-19
384-385	BIN 1069131, JOINT DETAILS	JD-20 + JD-21
386-387	BIN 1069132, JOINT DETAILS	JD-22 + JD-23
388-392	BIN 1069141 & BIN 1069142	JD-24 - JD-28
393-394	BIN 1072530, JOINT DETAILS	JD-29 + JD-30
395-396	BIN 1072571, JOINT DETAILS	JD-31 + JD-32
397-398	BIN 1072572, JOINT DETAILS	JD-33 + JD-34
399-400	BIN 1072581, JOINT DETAILS	JD-35 + JD-36
401-402	BIN 1072582, JOINT DETAILS	JD-37 + JD-38
403-404	BIN 1072781, JOINT DETAILS	JD-39 + JD-40
405-406	BIN 1072782, JOINT DETAILS	JD-41 + JD-42
407-408	BIN 1072792, JOINT DETAILS	JD-43 + JD-44
409-410	BIN 1093510, JOINT DETAILS	JD-45 + JD-46
411	BIN 1072791, BIN 1093520 & BIN 1093540, JOINT DETAILS	JD-47
412-413	BIN 1093550, JOINT DETAILS	JD-48 + JD-49
414-416	BIN 1093561 & BIN 1093562, JOINT DETAILS	JD-50 - JD-52
417-420	BIN 1093571 & BIN 1093572, JOINT DETAILS	JD-53 - JD-56
421-423	BIN 1093671 & BIN 1093672, JOINT DETAILS	JF-57 - JD-59

INDEX (CONTINUED)

SHEET NO.	DESCRIPTION	DRAWING NO.
424	VARIOUS BRIDGES - ROAD PLATE DETAIL	AA - RP1
	BAR LIST	
425-428	ALL BINS (BRIDGE JOINT SYSTEMS)	BL-1 - BL-4
429	BIN 1002131 & 1002132	BL-5
430	BIN 1093571	BL-6
431	STRUCTURAL SLAB OVERLAY & ASPHALT PAVEMENT REPAIR DETAILS	MS-1
432	MISC. TABLE	MT-1

ALL DIMENSIONS ARE IN m UNLESS OTHERWISE NOTED

AS BUILT REVISIONS

SIGNATURE DATE

INTERSTATE 481
REHABILITATION PROJECT

INDEX

STATE OF NEW YORK
DEPARTMENT OF TRANSPORTATION

FILENAME	REGION	DATE	DRAWING NO.
305613AAL2A	3	10/02	IDX-2

CHECKED BY
DRAFTED BY
ESTIMATED BY
DESIGNED BY

FED ROAD REG. NO.	STATE	CONTRACT NO.	SHEET NO.	TOTAL SHEETS
1	N.Y.	D259214	189	432

BRIDGE REHABILITATION PROJECT (ELEMENT SPECIFIC)
VARIOUS BRIDGES ON INTERSTATE 481
TOWNS OF DEWITT AND CICERO
ONONDAGA COUNTY
P.I.N. 305613 B.I.N. VARIOUS

ESTIMATE OF QUANTITIES BY STRUCTURE

ITEM #	DESCRIPTION	UNIT	1093550		1093561		1093562		1093571		1093572		1093671		1093672	
			EST.	FINAL	EST.	FINAL	EST.	FINAL	EST.	FINAL	EST.	FINAL	EST.	FINAL	EST.	FINAL
203.02 M	UNCLASSIFIED EXCAVATION & DISPOSAL	CM	—		—		—		—		—		—		—	
203.03 M	EMBANKMENT IN PLACE	CM	—		—		—		—		7		—		—	
203.07 M	SELECT GRANULAR FILL	CM	—		—		—		4		10		—		—	
203.1770 M	CLEAN EXISTING PIPE CULVERT	M	—		—		—		4		4		—		—	
203.18 M	CLEANING CLOSED DRAINAGE SYSTEMS	M	34		—		—		256		269		—		—	
203.19 M	CLEAN DRAINAGE STRUCTURES AND MANHOLES	EA	—		—		—		4		6		—		—	
203.21 M	SELECT STRUCTURE FILL	CM	—		—		—		—		—		—		—	
15203.51 M	GRADING, CLEANING AND RESHAPING EXISTING DITCHES	M	—		—		—		70		77		—		—	
206.01 M	STRUCTURE EXCAVATION	CM	—		—		—		—		—		—		—	
206.02 M	TRENCH AND CULVERT EXCAVATION	CM	—		—		—		24		22		—		—	
207.10 M	GEOTEXTILE BEDDING	SM	—		—		—		32		32		—		—	
210.5433 M	REMOVAL AND DISPOSAL OF ASBESTOS CONTAINING CAULKING (BV 12)	LS	—		—		—		NEC		NEC		—		—	
210.9913 M	REMOVAL AND DISPOSAL OF MISC. ASBESTOS CONTAINING MATERIAL BV-12	LS	NEC		—		—		—		—		—		—	
304.15 M	SUBBASE COURSE, OPTIONAL TYPE	CM	—		—		—		—		2		—		—	
402.128201 M	12.5mm F2 SUPERPAVE HMA, 80 SERIES COMPACTION	MT	6		4		5		3		3		5		5	
402.128211 M	PLANT PRODUCTION QUALITY ADJUSTMENT TO ITEM 402.128201M	QU	1		1		1		1		1		1		1	
402.258901 M	25mm F9 SUPERPAVE HMA, 80 SERIES COMPACTION	MT	10		6		8		5		5		8		8	
402.258911 M	PLANT PRODUCTION QUALITY ADJUSTMENT TO 402.258901M	QU	1		1		1		1		1		1		1	
402.378901 M	37.5mm, F9 SUPERPAVE HMA, 80 SERIES COMPACTION	MT	—		—		—		—		—		—		—	
402.378911 M	PLANT PRODUCTION QUALITY ADJUSTMENT TO 402.378901M	QU	—		—		—		—		—		—		—	
407.01 M	TACK COAT	L	22		13		17		12		12		17		17	
490.30 M	MISC. COLD MILLING OF BITUMINUS CONCRETE	SM	61		37		48		31		31		48		48	
502.92 M	SEALING TRANSVERSE JOINTS	M	—		—		—		—		—		—		—	
08520.5014 M	SAWCUT, ASPH, CONC/ASPH, OVERLAY- PCC PAVE	M	41		25		32		21		21		32		32	
552.13 M	TEMPORARY STEEL SHEETING	SM	—		—		—		—		—		—		—	
555.0105 M	CONCRETE FOR STRUCTURES - CLASS A	CM	—		—		—		1		2		—		—	
555.09 M	CONCRETE FOR STRUCTURES, CLASS HP	CM	2		2		2		88		15		2		2	
18555.81 M	STRUCTURAL CRACK SEALING	LM	—		—		—		—		—		—		—	
556.0201 M	UNCOATED BAR REINFORCEMENT FOR CONCRETE STRUCTURES	KG	—		—		—		1975		—		—		—	
556.0202 M	EPOXY COATED REBAR FOR STRUCTURES	KG	137		109		140		2732		613		145		145	
558.01 M	TRANSVERSE SAWCUT GROOVING OF STR SLAB SURF	SM	—		—		12		—		77		—		—	
18559.1696 M	PROTECTIVE SEALER STRUCTURAL CONCRETE	SM	—		—		—		1027		1031		—		—	
18559.1896 M	PROT SEAL STR. CONC. - NEW BRIDGE DECK OVERLAYS	SM	—		—		12		—		77		—		—	
564.0501 M	STRUCTURAL STEEL	LS	—		—		—		—		—		—		—	
565.1522 M	TYPE M.R. EXPANSION BEARING (1001 TO 2000 KN)	EA	—		—		—		8		—		—		—	
565.1722 M	TYPE M.R. FIXED BEARING (1001 TO 2000 KN)	EA	—		—		—		8		—		—		—	
15565.4302 M	BRIDGE BEARING RESTORATION	EA	12		—		—		32		36		—		—	
566.01 M	MODULAR EXPANSION JOINT SYSTEM, ONE-CELL	M	—		—		—		104		115		—		—	
566.02 M	MODULAR EXPANSION JOINT SYSTEM TWO-CELL	M	—		—		—		—		—		—		—	
567.31 M	ARM JNT SYS WI COMPRESSION SEAL - TY A1	M	—		—		—		—		—		—		—	
567.32 M	ARM JNT SYS WI COMPRESSION SEAL - TY A2	M	—		—		—		—		—		—		—	
567.35 M	ARM JNT SYS WI COMPRESSION SEAL - TY A5	M	—		13		17		—		—		17		17	
567.36 M	ARM JNT SYS WI COMPRESSION SEAL - TY A6	M	—		—		—		—		—		—		—	
18567.46 M	ELASTOMERIC CONCRETE FOR BRIDGE JOINT SYSTEMS	M	—		—		—		31		21		—		—	
16567.640001 M	REPLACE COMPRESSION SEAL IN EXISTING BRIDGE JOINTS	M	—		—		—		—		—		—		—	
568.32 M	CEMENT MORTAR PADS	EA	—		—		—		—		—		—		—	
568.50 M	STEEL BRIDGE RAILING (2 RAIL)	M	—		—		—		—		—		—		—	
570.090001 M	ENVIRONMENTAL GROUND PROTECTION	LS	—		—		—		NEC		—		—		—	
570.090002 M	ENVIRONMENTAL GROUND PROTECTION	LS	—		—		—		—		NEC		—		—	
570.090003 M	ENVIRONMENTAL GROUND PROTECTION	LS	—		—		—		—		—		—		—	

ALL DIMENSIONS ARE IN m UNLESS OTHERWISE NOTED

AS BUILT REVISIONS

SIGNATURE DATE

SHEET 10 OF 12

ESTIMATE OF QUANTITIES

STATE OF NEW YORK
DEPARTMENT OF TRANSPORTATION

FILENAME	REGION	DATE	DRAWING NO.
305613J.1A	3	10/02	QE-4A

CHECKED BY
DRAFTED BY
ESTIMATED BY
CHECKED BY
DESIGNED BY
JOB MANAGER
DESIGN SUPERVISOR

FED ROAD REG. NO.	STATE	CONTRACT NO.	SHEET NO.	TOTAL SHEETS
1	N.Y.	D259214	190	432

BRIDGE REHABILITATION PROJECT (ELEMENT SPECIFIC)
VARIOUS BRIDGES ON INTERSTATE 481
TOWNS OF DEWITT AND CICERO
ONONDAGA COUNTY
P.I.N. 305613 B.I.N. VARIOUS

ESTIMATE OF QUANTITIES BY STRUCTURE

ITEM #	DESCRIPTION	UNIT	1093550		1093561		1093562		1093571		1093572		1093671		1093672	
			EST.	FINAL	EST.	FINAL	EST.	FINAL	EST.	FINAL	EST.	FINAL	EST.	FINAL	EST.	FINAL
570.090004 M	ENVIRONMENTAL GROUND PROTECTION	LS	—		—		—		—		—		—		—	
570.100001 M	ENVIRONMENTAL WATERWAY PROTECTION	LS	—		—		—		NEC		—		—		—	
570.100002 M	ENVIRONMENTAL WATERWAY PROTECTION	LS	—		—		—		—		NEC		—		—	
16570.32 M	LOCALIZED PAINTING OF BARE STRUCTURAL STEEL	SM	—		—		—		18		21		—		—	
16570.72 M	LOCALIZED VACUUM CONTAINED CLEANING OF STRUCTURAL STEEL PLANAR SURFACES	SM	—		—		—		18		21		—		—	
16570.76 M	LOCALIZED VACUUM CONTAINED CLEANING OF STRUCTURAL STEEL - IRREGUALR	SM	—		—		—		—		—		—		—	
571.010001 M	TREATMENT AND DISPOSAL OF PAINT REMOVAL WASTE	CM	—		—		—		1		—		—		—	
571.010002 M	TREATMENT AND DISPOSAL OF PAINT REMOVAL WASTE	CM	—		—		—		—		1		—		—	
571.010003 M	TREATMENT AND DISPOSAL OF PAINT REMOVAL WASTE	CM	—		—		—		—		—		—		—	
571.010004 M	TREATMENT AND DISPOSAL OF PAINT REMOVAL WASTE	CM	—		—		—		—		—		—		—	
572.010001 M	STRUCTURAL STEEL PAINT SYSTEM: SHOP APPLIED	SM	—		—		—		1		—		—		—	
572.010002 M	STRUCTURAL STEEL PAINT SYSTEM: SHOP APPLIED	SM	—		—		—		—		1		—		—	
576.2001M	DOWNSPOUT SYSTEM, DUCTILE IRON	M	—		—		—		3		4		—		—	
578.020001 M	OVERLAY CONCRETE - CLASS E	SM	—		—		—		—		—		—		—	
578.020002 M	OVERLAY CONCRETE - CLASS E	SM	—		—		—		—		—		—		—	
578.020003 M	OVERLAY CONCRETE - CLASS E	SM	—		—		—		—		—		—		—	
578.020004 M	OVERLAY CONCRETE - CLASS E	SM	—		—		—		—		77		—		—	
578.020005 M	OVERLAY CONCRETE - CLASS E	SM	—		—		12		—		—		—		—	
578.030001 M	SLAB RECONSTRUCTION CONCRETE - CLASS D OR E	SM	—		—		—		—		—		—		—	
578.030002 M	SLAB RECONSTRUCTION CONCRETE - CLASS D OR E	SM	—		—		—		—		—		—		—	
578.030003 M	SLAB RECONSTRUCTION CONCRETE - CLASS D OR E	SM	—		—		—		—		—		—		—	
578.030004 M	SLAB RECONSTRUCTION CONCRETE - CLASS D OR E	SM	—		—		—		—		77		—		—	
578.030005 M	SLAB RECONSTRUCTION CONCRETE - CLASS D OR E	SM	—		—		12		—		—		—		—	
578.030006 M	SLAB RECONSTRUCTION CONCRETE - CLASS D OR E	SM	—		—		—		—		—		—		—	
578.030007 M	SLAB RECONSTRUCTION CONCRETE - CLASS D OR E	SM	—		—		—		—		—		—		—	
579.02 M	REINFORCING BAR EXPOSURE	SM	—		—		12		—		77		—		—	
580.01 M	REMOVAL OF STRUCTURAL CONCRETE	CM	2		2		2		62		15		2		2	
582.05 M	REMOVE STRUCTURAL CONCRETE WITH CLASS A CONCRETE	CM	16		1		1		43		46		2		5	
582.07 M	REMOVE STRUCTURAL CONCRETE AND REPLACE WITH VERTICAL OVERHEAD PATCH MATERIAL	SM	—		—		—		151		221		—		—	
16584.13 M	RAPID SETTING CONCRETE FOR BRIDGE AND APPROACH SLAB REPAIRS	KG	—		—		—		—		—		—		—	
585.01 M	STRUCTURAL LIFTING OPERATIONS - TYPE A	EA	12		—		—		—		—		—		—	
585.02 M	STRUCTURAL LIFTING OPERATIONS - TYPE B	EA	—		—		—		21		25		—		—	
585.03 M	STRUCTURAL LIFTING OPERATIONS TYPE C	EA	—		—		—		35		35		—		—	
586.01 M	DRILL AND GROUT BOLTS, OR REINFORCING BARS	mm	19200		13050		16650		53700		59100		15600		15600	
17586.18M	DRILLING HOLES IN EXISITING SUBSTRUCTURE	M	—		—		—		—		—		—		—	
16586.200125 M	DRILL AND GROUT ANCHOR BOLTS AND REBAR IN CONCRETE	EA	—		—		—		—		—		—		—	
16586.200216 M	DRILL AND GROUT ANCHOR BOLTS AND REBAR IN CONCRETE	EA	—		—		—		—		—		—		—	
587.01 M	BRIDGE RAILING REMOVAL AND DISPOSAL	M	—		—		—		—		—		—		—	
589.520001 M	REMOVAL OF EXISTING STEEL	EA	—		—		—		4		—		—		—	
589.520002 M	REMOVAL OF EXISTING STEEL	EA	—		—		—		—		6		—		—	
589.520003 M	REMOVAL OF EXISTING STEEL	EA	—		—		—		—		—		—		—	
589.520004 M	REMOVAL OF EXISTING STEEL	EA	—		—		—		—		—		—		—	
589.520005 M	REMOVAL OF EXISTING STEEL	EA	—		—		—		8		—		—		—	
590.01M	VERTICAL ADJUSTMENT OF BRIDGE DRAINAGE DEVICES	EA	—		—		—		7		9		—		—	
603.6001 M	REINFORCED CONCRETE PIPE CLASS III, 300 mm	M	—		—		—		—		4		—		—	
603.7301M	REINFORCED CONCRETE PIPE END SECTION 300 mm DIAMETER	EA	—		—		—		—		3		—		—	

ALL DIMENSIONS ARE IN m UNLESS OTHERWISE NOTED

AS BUILT REVISIONS

SIGNATURE DATE

SHEET 11 OF 12

ESTIMATE OF QUANTITIES

STATE OF NEW YORK
DEPARTMENT OF TRANSPORTATION

FILENAME	REGION	DATE	DRAWING NO.
305613J1A	3	10/02	QE-4B

DESIGN SUPERVISOR ____ JOB MANAGER ____ ESTIMATED BY ____ DESIGNED BY ____ DRAFTED BY ____ CHECKED BY ____ CHECKED BY ____

FED ROAD REG. NO.	STATE	CONTRACT NO.	SHEET NO.	TOTAL SHEETS
1	N.Y.	D259214	191	432

BRIDGE REHABILITATION PROJECT (ELEMENT SPECIFIC)
VARIOUS BRIDGES ON INTERSTATE 481
TOWNS OF DEWITT AND CICERO
ONONDAGA COUNTY
P.I.N. 305613 B.I.N. VARIOUS

ESTIMATE OF QUANTITIES BY STRUCTURE

ITEM #	DESCRIPTION	UNIT	1093550		1093561		1093562		1093571		1093572		1093671		1093672	
			EST.	FINAL	EST.	FINAL	EST.	FINAL	EST.	FINAL	EST.	FINAL	EST.	FINAL	EST.	FINAL
605.0901 M	UNDERDRAIN FILTER TYPE 1	CM	—		—		—		—		—		—		—	
605.1702 M	OPT. UNDERDRAIN PIPE 150 mm ø	M	—		—		—		—		—		—		—	
606.73 M	REMOVE AND DISPOSE OF BOX BEAM GUIDE RAIL	M	—		—		—		—		—		—		—	
606.8701 M	CORRUGATED BEAM GUIDE RAILING TRANSITION ASSEMBLY, TWO RAIL, STEEL BRIDGE RAILING	EA	—		—		—		2		2		—		—	
16606.80 M	TRANSITION BRIDGE RAILING TO BOX BEAM GUIDE RAIL	M	—		—		—		—		—		—		—	
609.15 M	RESETTING EXISTING CURB	M	—		—		—		—		—		—		—	
610.0203 M	ESTABLISH TURF	SM	—		—		—		100		200		—		—	
612.0205 M	CLASS II TYPE B EROSION CONTROL MATERIAL	SM	—		—		—		100		150		—		—	
08615.0402 M	TREE AND VEGETATION BARRIER	M	—		—		—		150		150		—		—	
620.03 M	STONE FILLING (LIGHT)	CM	—		—		—		6		8		—		—	
625.01 M	SURVEY AND STAKEOUT	LS	—		—		—		—		—		—		—	
637.03 M	CONCRETE CYLINDER CURING BOX	EA	—		—		—		—		—		—		—	
637.0702 M	ENGINEER'S OFFICE TYPE C	MNTH	—		—		—		—		—		—		—	
10637.2101 M	FURN PORTABLE CELLULAR TELEPHONE EQUIP.	LS	—		—		—		—		—		—		—	
08637.3501 M	MICRO COMPUTER SYSTEM	EA	—		—		—		—		—		—		—	
15637.61 M	CPM SCHEDULE	LS	—		—		—		—		—		—		—	
15637.51 M	DIGITAL CAMERA SYSTEM	LS	—		—		—		—		—		—		—	
15637.91 M	CHAMPS MANAGEMENT SYSTEM	LS	—		—		—		—		—		—		—	
15637.98 M	PARTNERING WORKSHOP	LS	—		—		—		—		—		—		—	
640.10 M	WHITE PAINT REFLEC PAVEMENT STRIPES-0.38 mm	M	12		8		9		8		8		9		9	
640.11 M	YELLOW PAINT REFLEC PAVEMENT STRIPES-0.38 mm	M	9		4		6		6		6		6		6	
14646.10 M	MILLED IN AUDIBLE ROWAY DELINS (MIARD)	M	—		—		—		—		—		—		—	
23675.15M	FURNISH AND PLACE STONE BALLAST SURFACING COURSE	MT	—		—		—		—		2		—		—	
91685.0705 M	WHT POLYESTER REFLEC PAVEMENT STRIPE	M	12		8		9		8		8		9		9	
91685.0706 M	YEL POLYESTER REFLEC PAVEMENT STRIPE	M	9		4		6		6		6		6		6	
697.02 M	FIELD CHANGE ORDER	LS	—		—		—						—		—	
699.040001 M	MOBILIZATION	LS	NEC		NEC		NEC		NEC		NEC		NEC		NEC	

STANDARD SYMBOL (PLANS)	ITEM PAYMENT UNIT: ESTIMATE OF QUANTITIES SHEET	EQUIVALENT NOMENCLATURE: SPEC BOOK/PROPOSAL
m	M	METER
m^2	SQM	SQUARE METER
m^3	CM	CUBIC METER
km	KM	KILOMETER
ha	HA	HECTARE
kg	KG	KILOGRAM
† OR Mg*	MT	METRIC TON
L	L	LITER

* THE METRIC TON IS EQUIVALENT TO ONE MEGAGRAM (Mg)

ALL DIMENSIONS ARE IN m UNLESS OTHERWISE NOTED

AS BUILT REVISIONS

SIGNATURE DATE

SHEET 12 OF 12

ESTIMATE OF QUANTITIES

STATE OF NEW YORK
DEPARTMENT OF TRANSPORTATION

FILENAME	REGION	DATE	DRAWING NO.
305613.L1A	3	10/02	QE-4C

DESIGN SUPERVISOR ____ JOB MANAGER ____ DESIGNED BY ____ CHECKED BY ____ ESTIMATED BY ____ DRAFTED BY ____ CHECKED BY ____

FED ROAD REG. NO.	STATE	CONTRACT NO.	SHEET NO.	TOTAL SHEETS
1	N.Y.	D259214	284	432

BRIDGE REHABILITATION PROJECT (ELEMENT SPECIFIC)
VARIOUS BRIDGES ON INTERSTATE 481
TOWNS OF DEWITT AND CICERO
ONONDAGA COUNTY
P.I.N. 305613 | B.I.N. 1093571 & 1093572

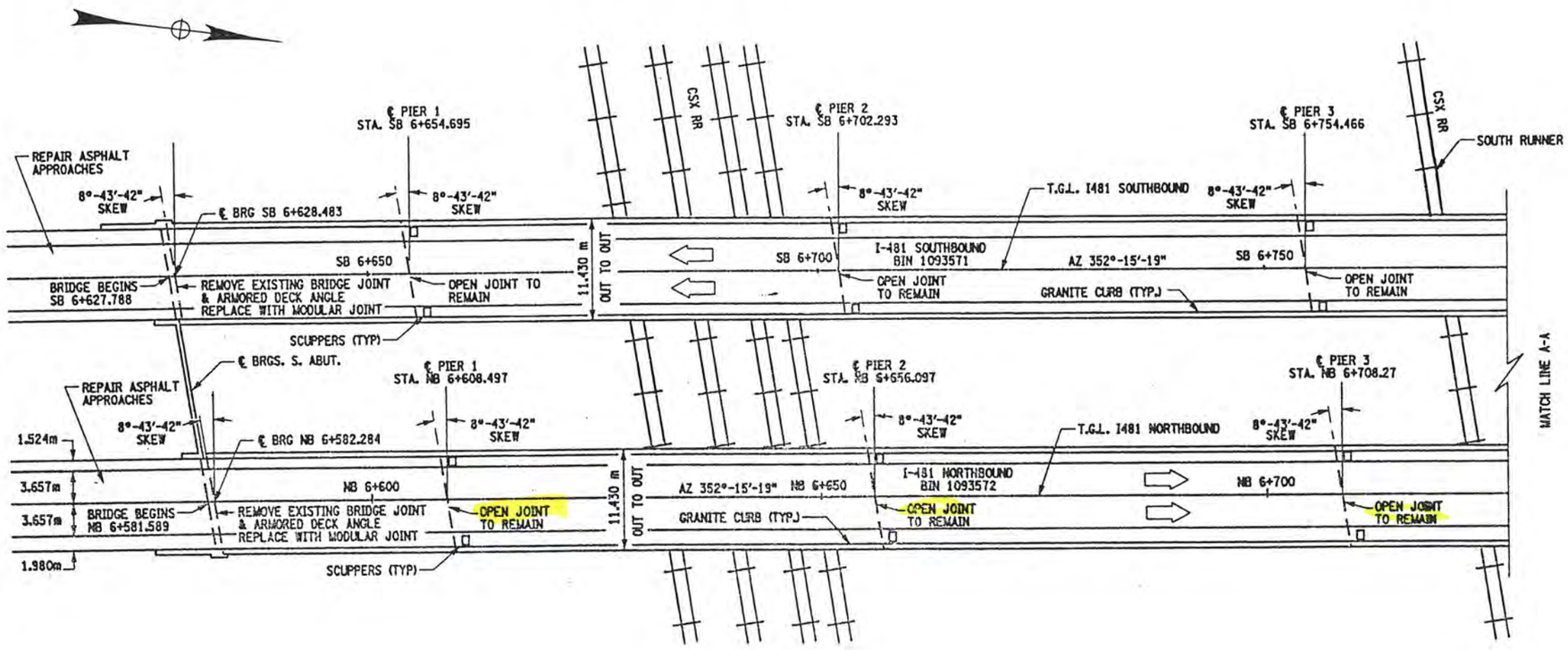

PLAN

SCALE 1:300

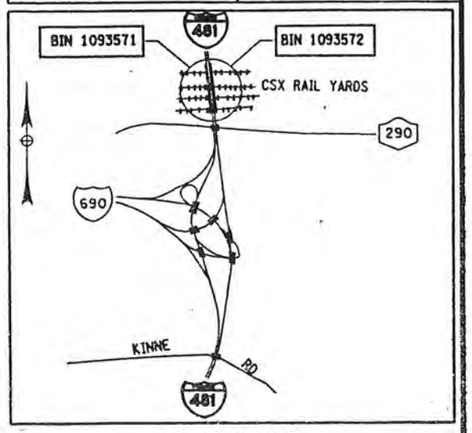

LOCATION MAP
NOT TO SCALE

NOTES:

SEE DWG. GP17-2 FOR WORK TO BE DONE ON BIN 1093571 AND DWG. GP17-3 FOR WORK TO BE DONE ON BIN 1093572.

REFER TO DWG. NO. JT-3 AND JT-4 FOR BRIDGE JOINT INFORMATION.

ELECTRIC UTILITY IN THE VICINITY OF BRIDGES. SEE INFORMATION AVAILABLE TO BIDDERS FOR ADDITIONAL INFORMATION.

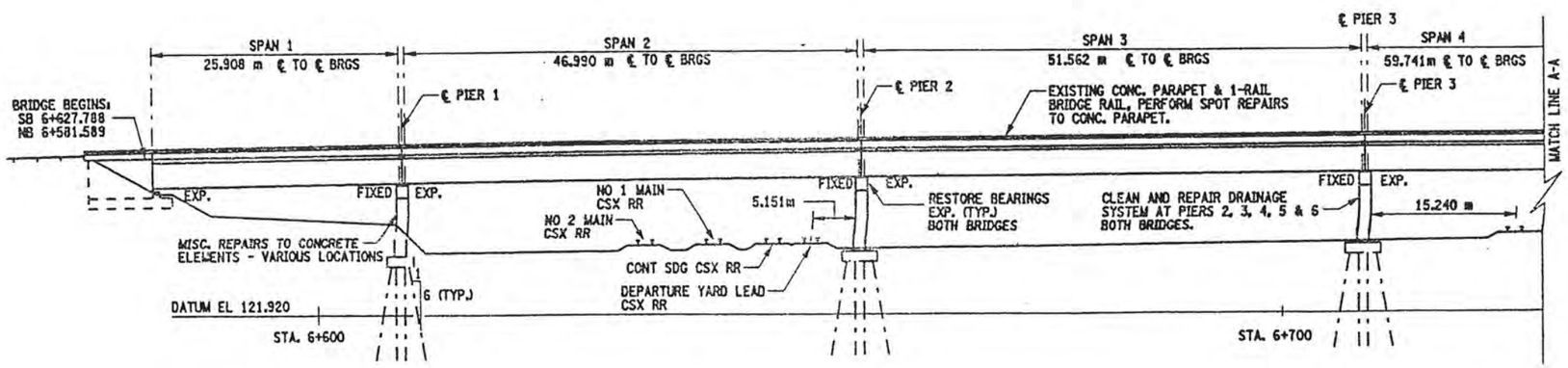

ELEVATION

SCALE 1:300

BIN 1093571 SOUTHBOUND
BIN 1093572 NORTHBOUND

ALL DIMENSIONS ARE IN m UNLESS OTHERWISE NOTED

AS BUILT REVISIONS

SIGNATURE | DATE

INTERSTATE 481
OVER
CSX RAILROAD YARD

PLAN AND ELEVATION
1 OF 4

STATE OF NEW YORK
DEPARTMENT OF TRANSPORTATION

FILENAME	REGION	DATE	DRAWING NO.
305613AE.G1A	3	10/02	GP17-1

DESIGN SUPERVISOR ___ JOB MANAGER ___ DESIGNED BY ___ ESTIMATED BY ___ DRAFTED BY ___ CHECKED BY ___ CHECKED BY ___

FED ROAD REG. NO.	STATE	CONTRACT NO.	SHEET NO.	TOTAL SHEETS
1	N.Y.	D259214	285	432

BRIDGE REHABILITATION PROJECT (ELEMENT SPECIFIC)
VARIOUS BRIDGES ON INTERSTATE 481
TOWNS OF DEWITT AND CICERO
COUNTY OF ONONDAGA
P.I.N. 305613 | B.I.N. 1093571 & 1093572

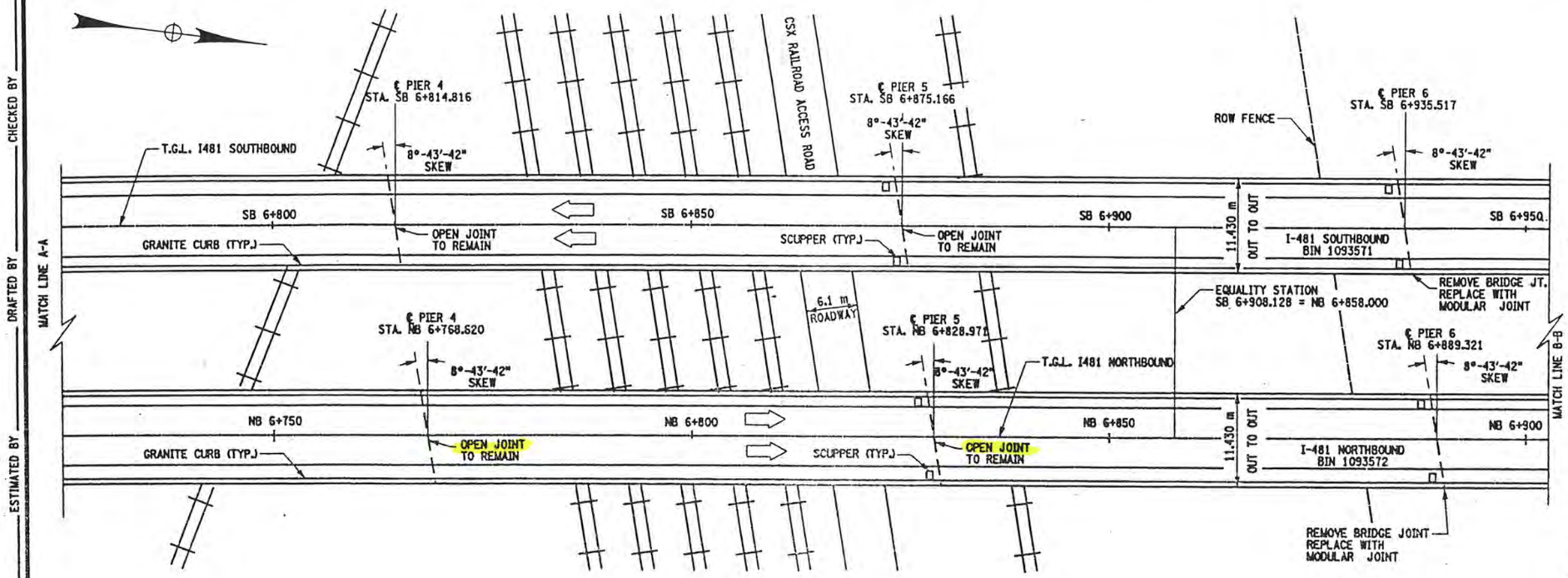

PLAN

SCALE 1:300

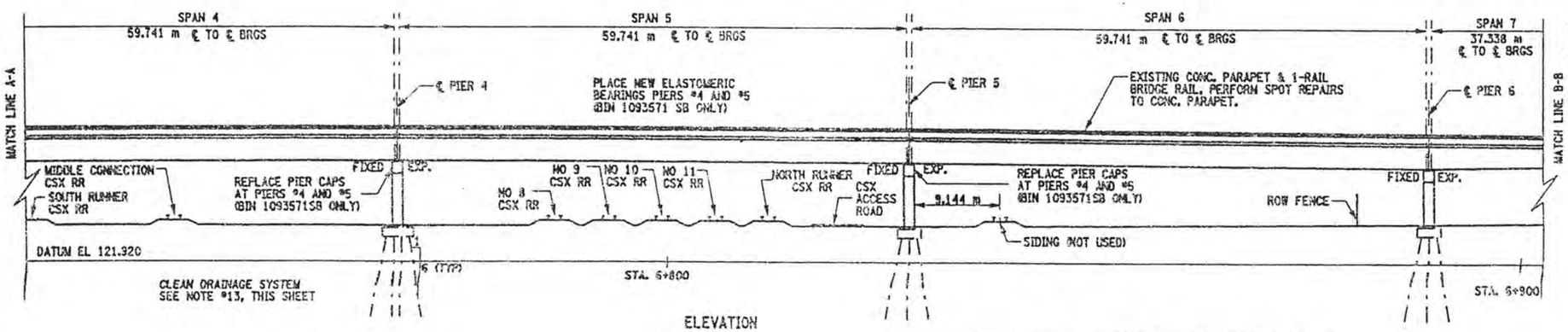

ELEVATION

SCALE 1:300

TRACK	VERTICAL CLEARANCE	HORIZONTAL CLEARANCE
	METERS	METERS
NO 2 MAIN	7.468	16.000
NO 1 MAIN	7.295	NA
CONT SDG	7.498	NA
DEPARTURE YARD LEAD	7.559	5.151
SOUTH RUNNER	8.169	15.240
MIDDLE CONNECTION	8.077	NA
NO 8	8.077	17.891
NO 9	8.077	NA
NO 10	8.077	NA
NO 11	8.169	NA
NORTH RUNNER	8.169	NA
SIDING	NA	9.144

NOTE: ALL DIMENSIONS SHOWN IN THIS TABLE ARE FIELD MEASUREMENTS.

WORK TO BE DONE ON BIN 1093571 SB: (NOT NECESSARILY IN THIS ORDER)

1. ESTABLISH MP&T SCHEME FOR STAGE CONSTRUCTION, (RR TRAFFIC CONTROL REQUIRED).
2. REMOVE EXISTING BRIDGE JOINTS AT THE BEGINNING ABUTMENT (TO INCLUDE ARMORING DECK ANGLE) AND PIERS #6, #7, #8, #10, #11 #12, #13 AND #14.
3. INSTALL NEW BRIDGE JOINTS, (MODULAR ONE-CELL JOINT SYSTEM).
4. INSTALL NEW COMPRESSION SEALS AT THE PARAPET SECTIONS OF THE EXISTING OPEN JOINTS, (PIERS #1, #2, #3, #4, #5 & #9). REPAIR EXISTING CONCRETE PARAPETS. OPEN JOINTS TO REMAIN.
5. REMOVE EXISTING ARMORING DECK ANGLE, AT END ABUTMENT.
6. REPAIR THE DECK AREA, WHERE ARMORING ANGLE WAS REMOVED.
7. PERFORM MINOR REPAIRS TO ASPHALT APPROACHES.
8. REPAIR THE CONCRETE ELEMENTS (I.E. PIER CAPS, PIER COLUMNS AND PIER PEDESTALS).
9. PERFORM BEARING RESTORATION TO ALL EXPANSION BEARINGS (TO INCLUDE RESETTING OF UNDER EXTENDED BEARINGS).
10. REMOVE PIER CAP #4 AND #5, TO INCLUDE PEDESTALS AND BEARINGS.
11. CONSTRUCT NEW PIER CAPS AND PEDESTALS AT PIERS #4 AND #5.
12. PLACE NEW BEARINGS AT PIERS #4 & #5, (ELASTOMERIC BEARINGS).
13. CLEAN AND MODIFY EXISTING CLOSED DRAINAGE SYSTEM AT PIERS #1, #2, #3, #4, #5 AND #9.
14. INSTALL SCUPPER DOWNSPOUT EXTENSIONS AT EXISTING SCUPPERS, SPANS #7 THRU #14.
15. PERFORM DRAINAGE IMPROVEMENTS AT RR YARD.
16. REPAIR EXISTING CONCRETE PARAPETS.

BIN 1093571 SOUTHBOUND
BIN 1093572 NORTHBOUND
ALL DIMENSIONS ARE IN m UNLESS OTHERWISE NOTED

AS BUILT REVISIONS

SIGNATURE | DATE

INTERSTATE 481
OVER
CSX RAILROAD YARD
PLAN AND ELEVATION
2 OF 4

STATE OF NEW YORK
DEPARTMENT OF TRANSPORTATION

FILENAME	REGION	DATE	DRAWING NO.
305613AE.G1A	3	10/02	GP17-2

CHECKED BY
DRAFTED BY
ESTIMATED BY
CHECKED BY
DESIGNED BY
JOB MANAGER
DESIGN SUPERVISOR

FED ROAD REG. NO.	STATE	CONTRACT NO.	SHEET NO.	TOTAL SHEETS
1	N.Y.	D259214	286	432

BRIDGE REHABILITATION PROJECT (ELEMENT SPECIFIC)
VARIOUS BRIDGES ON INTERSTATE 481
TOWNS OF DEWITT AND CICERO
COUNTY OF ONONDAGA
P.I.N. 305613 | B.I.N. 1093571 & 1093572

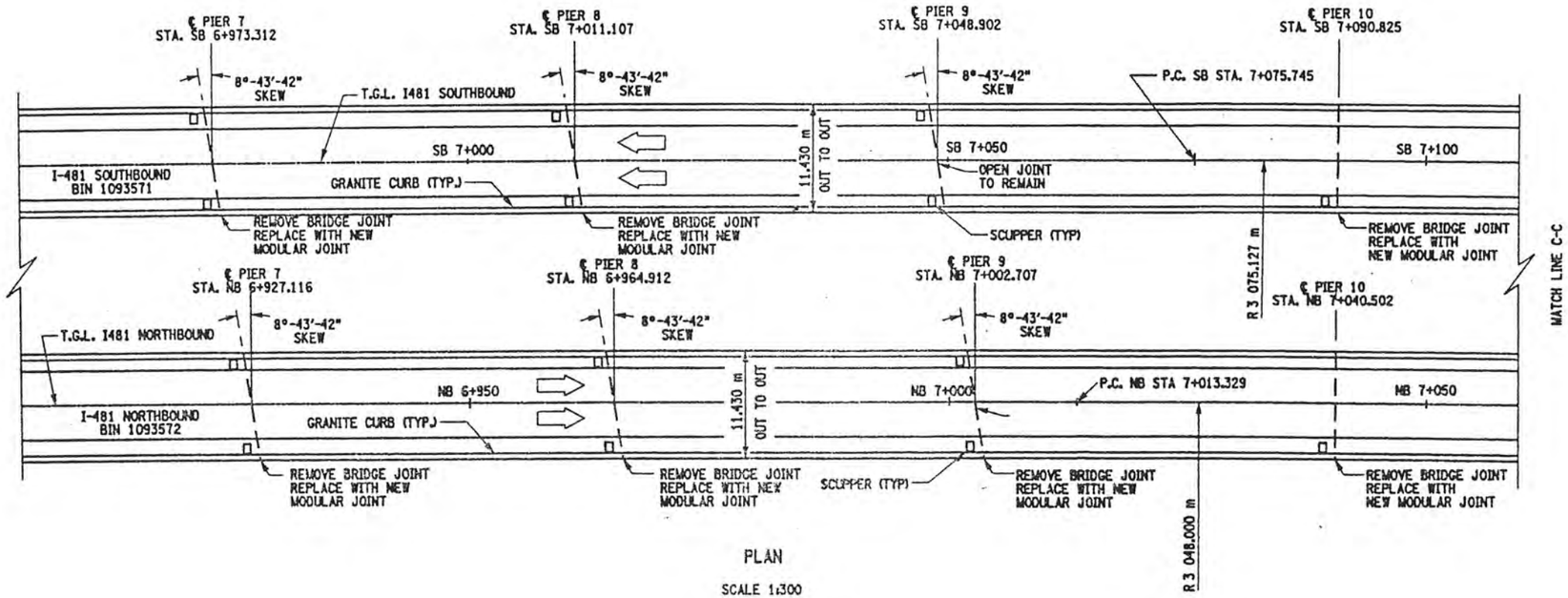

PLAN
SCALE 1:300

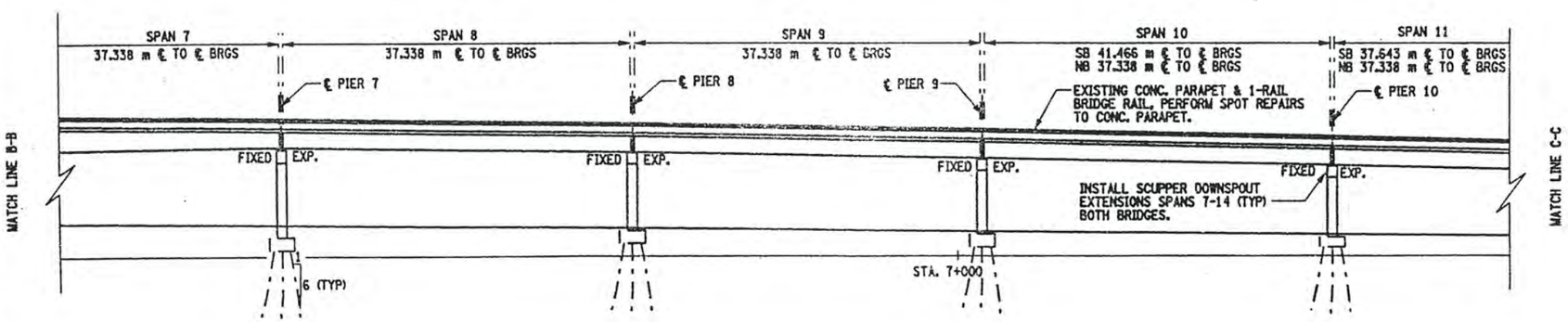

ELEVATION
SCALE 1:300

CURVE DATA	
SOUTHBOUND	NORTHBOUND
P.C.=7+075.745	P.C.=7+013.329
Δ=7°-04'-13"	Δ=7°-04'-13"
R=3075.127	R=3048.000
L=379.470	L=376.122
T=189.976	T=188.300

WORK TO BE DONE ON BIN 1093572, NB: (NOT NECESSARILY IN THIS ORDER)

1. ESTABLISH MP&T SCHEME FOR STAGE CONSTRUCTION, (RR TRAFFIC CONTROL REQUIRED).
2. REMOVE EXISTING BRIDGE JOINT AT BEGINNING ABUTMENT AND PIERS #6, #7, #8, #9, #10, #11, #12, #13 AND #14.
3. INSTALL NEW BRIDGE JOINTS, (MODULAR ONE-CELL JOINTS).
4. INSTALL NEW COMPRESSION SEALS AT THE PARAPET SECTIONS OF THE EXISTING OPEN JOINTS AT PIERS #1, #2, #3, #4 AND #5.
5. REPAIR EXISTING CONCRETE PARAPETS.
6. PERFORM REBAR EXPOSURE IN AREAS SHOWN ON PLANS, OR A.O.B.E. TO REPACE ASPHALT PATCHES, (SPOT REPAIRS TO BRIDGE DECK).
7. PLACE SLAB RECONSTRUCTION CONCRETE.
8. REMOVE EXISTING ARMORING DECK ANGLE, AT END ABUTMENT.
9. REPAIR THE BRIDGE DECK AREA AT THE END ABUTMENT, WHERE THE ARMORING DECK ANGLE WAS REMOVED.
10. PERFORM MINOR REPAIRS TO ASPHALT APPROACHES.
11. REPAIR CONCRETE ELEMENTS, (PIER CAPS, COLUMNS AND PEDESTALS).
12. PERFORM BEARING RESTORATION TO ALL EXPANSION BEARINGS (TO INCLUDE RESETTING OF UNDER EXTENDED BEARINGS).
13. CLEAN AND MODIFY EXISTING CLOSED DRAINAGE SYSTEMS AT PIERS #1, #2, #3, #4, #5 AND #6.
14. INSTALL SCUPPER DOWNSPOUT EXTENSIONS AT EXISTING SCUPPERS, SPANS #7 THRU #14.
15. PERFORM DRAINAGE IMPROVEMENTS AT RR YARD.

BIN 1093571 SOUTHBOUND
BIN 1093572 NORTHBOUND
ALL DIMENSIONS ARE IN m UNLESS OTHERWISE NOTED

AS BUILT REVISIONS

SIGNATURE | DATE

INTERSTATE 481
OVER
CSX RAILROAD YARD
PLAN AND ELEVATION
3 OF 4

STATE OF NEW YORK
DEPARTMENT OF TRANSPORTATION

FILENAME	REGION	DATE	DRAWING NO.
305613AE.G1A	3	10/02	GP17-3

CHECKED BY
DRAFTED BY
ESTIMATED BY
CHECKED BY
DESIGNED BY
JOB MANAGER
DESIGN SUPERVISOR

FED ROAD REG. NO.	STATE	CONTRACT NO.	SHEET NO.	TOTAL SHEETS
1	N.Y.	D259214	287	432

BRIDGE REHABILITATION PROJECT (ELEMENT SPECIFIC)
VARIOUS BRIDGES ON INTERSTATE 481
TOWNS OF DEWITT AND CICERO
COUNTY OF ONONDAGA
P.I.N. 305613 | B.I.N. 1093571 & 1093572

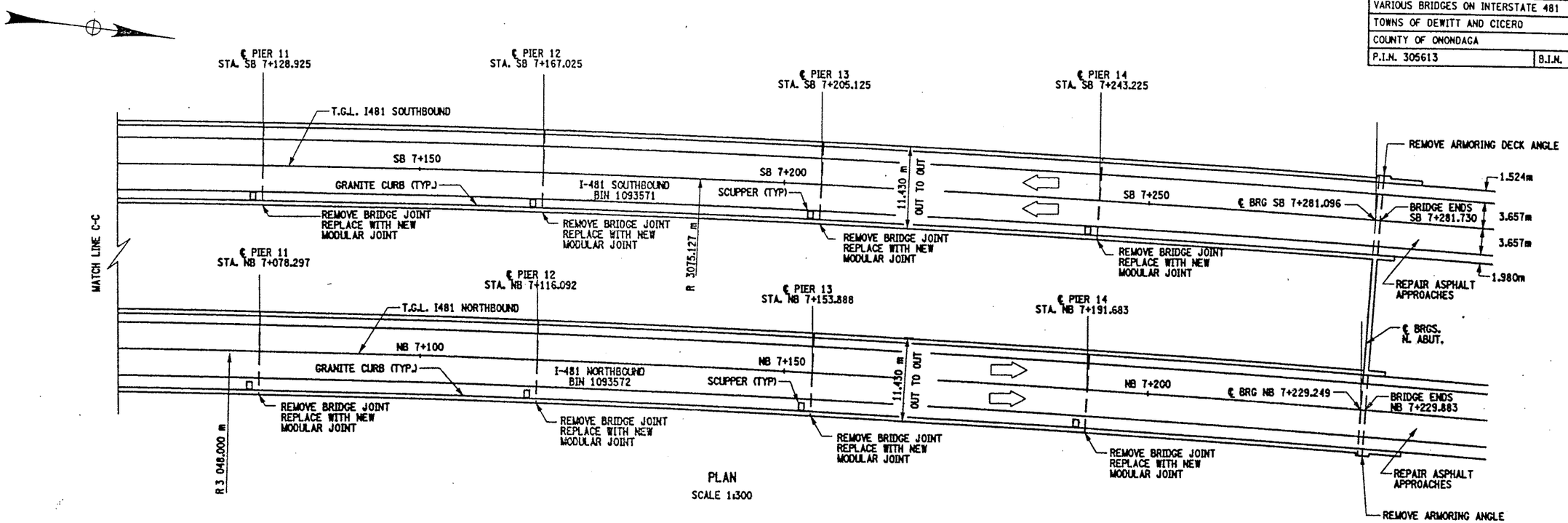

PLAN
SCALE 1:300

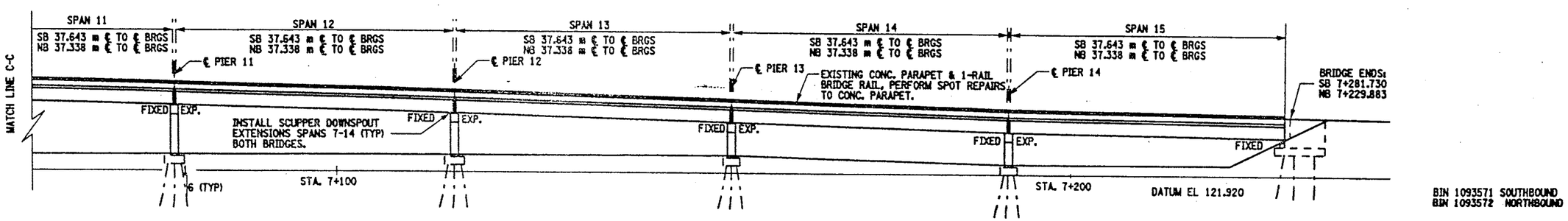

BIN 1093571 SOUTHBOUND
BIN 1093572 NORTHBOUND

ELEVATION
SCALE 1:300

ALL DIMENSIONS ARE IN m UNLESS OTHERWISE NOTED

AS BUILT REVISIONS

SIGNATURE DATE

INTERSTATE 481
OVER
CSX RAILROAD YARD

PLAN AND ELEVATION
4 OF 4

STATE OF NEW YORK
DEPARTMENT OF TRANSPORTATION

FILENAME	REGION	DATE	DRAWING NO.
305613AE.G1A	3	10/02	GP17-4

DESIGN SUPERVISOR ____ JOB MANAGER ____ DESIGNED BY ____ CHECKED BY ____ ESTIMATED BY ____ DRAFTED BY ____ CHECKED BY ____

FEO ROAD REG. NO.	STATE	CONTRACT NO.	SHEET NO.	TOTAL SHEETS
1	N.Y.	D259214	288	432

BRIDGE REHABILITATION PROJECT (ELEMENT SPECIFIC)
VARIOUS BRIDGES ON INTERSTATE 481
TOWNS OF DEWITT AND CICERO
COUNTY OF ONONDAGA
P.I.N. 305613 | B.I.N. 1093571 & 1093572

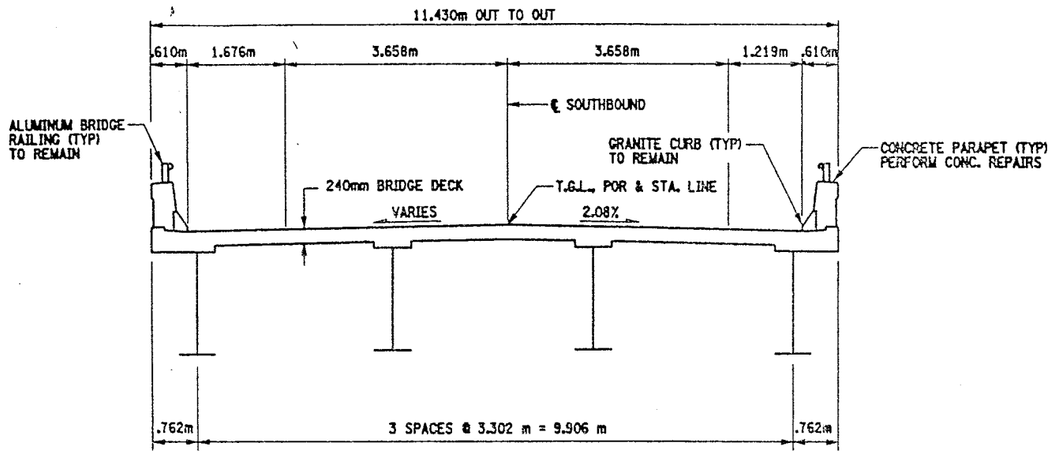

SOUTHBOUND
BIN 1093571

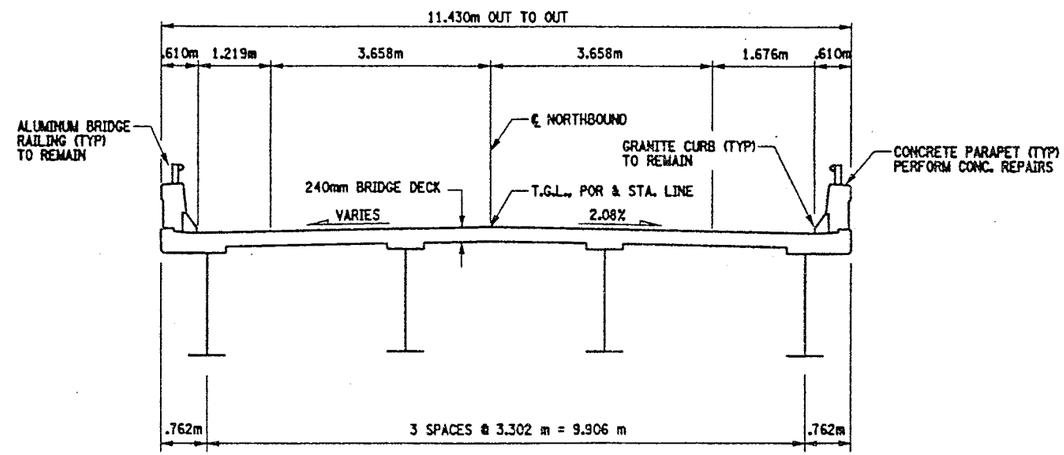

NORTHBOUND
BIN 1093572

TYPICAL BRIDGE SECTIONS

NOTES:

ORIGINAL BRIDGE DECK 203mm MONOLITHIC SLAB.
38mm CONCRETE OVERLAY ADDED LATER.

SEE ORIGINAL CONTRACT PLANS F.I.S.H. 70-7 AND CONTRACT PLANS D251436.

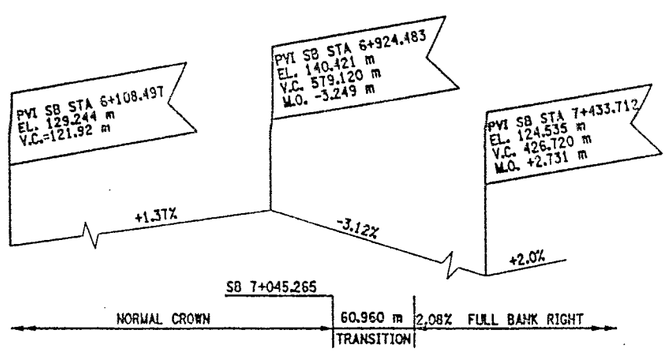

PROFILE SOUTHBOUND
NOT TO SCALE

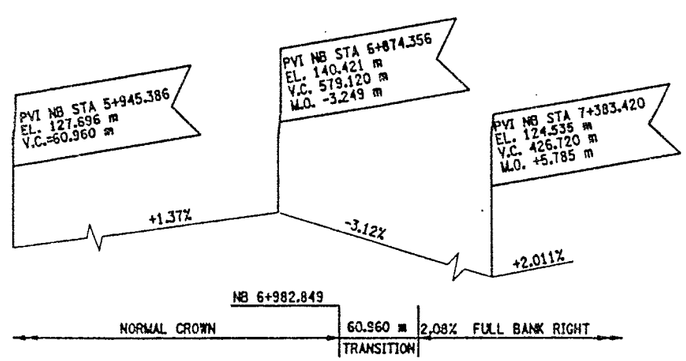

PROFILE NORTHBOUND
NOT TO SCALE

BIN 1093571 SOUTHBOUND
BIN 1093572 NORTHBOUND

ALL DIMENSIONS ARE IN m UNLESS OTHERWISE NOTED

AS BUILT REVISIONS

SIGNATURE | DATE

INTERSTATE 481
OVER
CSX RAILROAD YARD
TYPICAL BRIDGE SECTION
AND PROFILES

STATE OF NEW YORK
DEPARTMENT OF TRANSPORTATION

FILENAME	REGION	DATE	DRAWING NO.
305613AE.G1A	3	10/02	TS17-1

DESIGN SUPERVISOR ____ JOB MANAGER ____ DESIGNED BY ____ ESTIMATED BY ____ DRAFTED BY ____ CHECKED BY ____ CHECKED BY ____

FED ROAD REG. NO.	STATE	CONTRACT NO.	SHEET NO.	TOTAL SHEETS
1	N.Y.	D259214	289	432

BRIDGE REHABILITATION PROJECT (ELEMENT SPECIFIC)

VARIOUS BRIDGES ON INTERSTATE 481

TOWNS OF DEWITT AND CICERO

COUNTY OF ONONDAGA

P.I.N. 305613 | B.I.N. 1093571 & 1093572

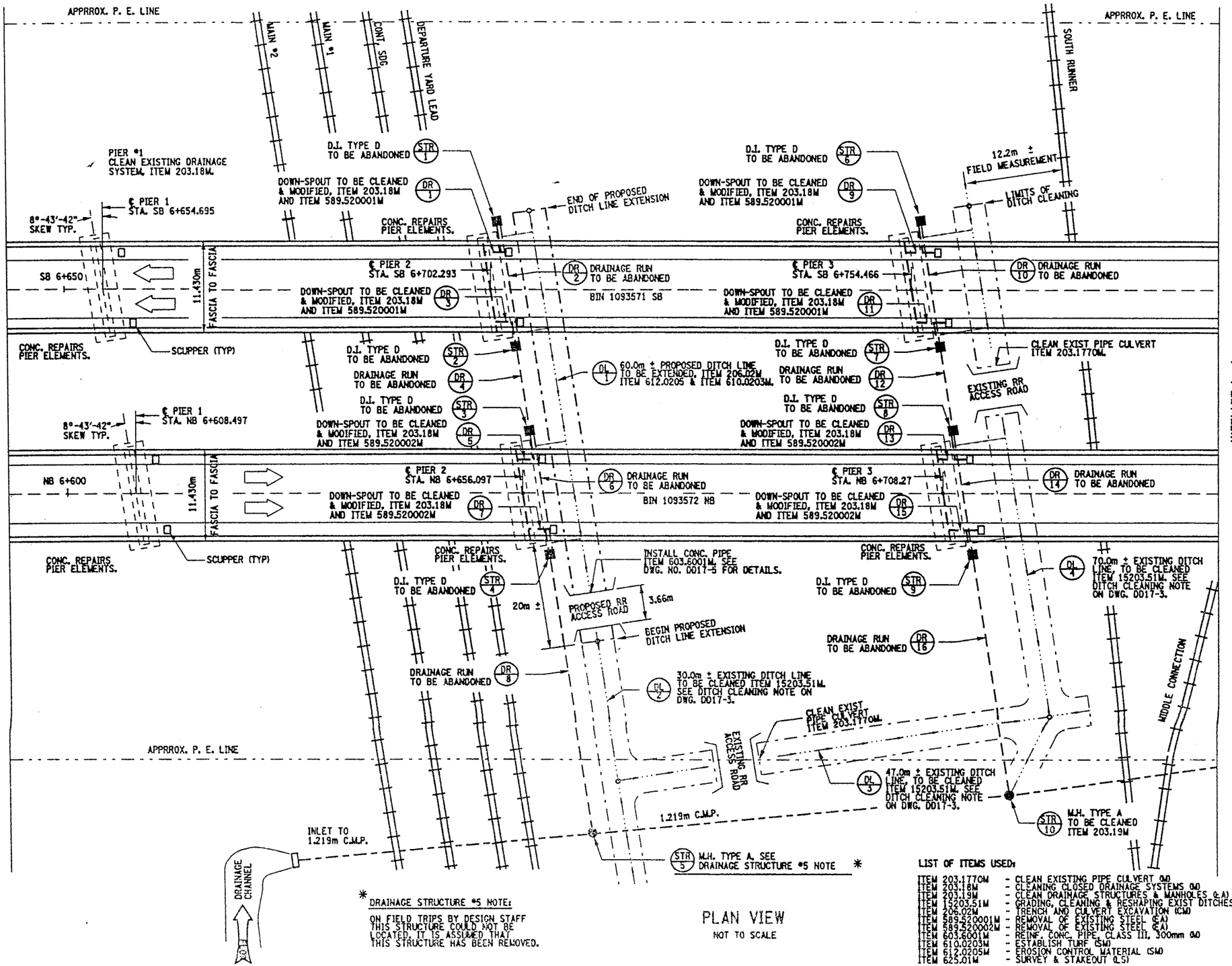

* DRAINAGE STRUCTURE #5 NOTE:

ON FIELD TRIPS BY DESIGN STAFF THIS STRUCTURE COULD NOT BE LOCATED. IT IS ASSUMED THAT THIS STRUCTURE HAS BEEN REMOVED.

PLAN VIEW

NOT TO SCALE

LIST OF ITEMS USED:

ITEM 203.1770M	- CLEAN EXISTING PIPE CULVERT (LM)
ITEM 203.18M	- CLEANING CLOSED DRAINAGE SYSTEMS (LM)
ITEM 203.19M	- CLEAN DRAINAGE STRUCTURES & MANHOLES (EA)
ITEM 15203.51M	- GRADING, CLEANING & RESHAPING EXIST DITCHES (LM)
ITEM 206.02M	- TRENCH AND CULVERT EXCAVATION (CM)
ITEM 589.520001M	- REMOVAL OF EXISTING STEEL (EA)
ITEM 589.520002M	- REMOVAL OF EXISTING STEEL (EA)
ITEM 603.6001M	- REINF. CONC. PIPE, CLASS III, 300mm (LM)
ITEM 610.0203M	- ESTABLISH TURF (SM)
ITEM 612.0205M	- EROSION CONTROL MATERIAL (SM)
ITEM 625.01M	- SURVEY & STAKEOUT (LS)

GENERAL NOTES:

THE PROPOSED DRAINAGE WORK IS BASED ON DRAINAGE INFORMATION FROM ORIGINAL CONTRACT F.I.S.H. 70-7. REFER TO ORIGINAL CONTRACT PLANS FOR DETAILS OF EXISTING DRAINAGE STRUCTURES.

THE CONTRACTOR SHALL VERIFY THIS INFORMATION WITH FIELD SITE INSPECTIONS.

CONTRACTOR SHALL NOTE THAT ALL DRAINAGE SYSTEMS AND STRUCTURES SHALL BE CLEANED UNDER ITEMS 203.18M OR 203.19M.

THE EXACT PLACEMENT OF THE PROPOSED RR ACCESS ROAD (CONC. PIPE CULVERT) SHALL BE AT THE DISCRETION OF THE ENGINEER.

NO EXISTING SURVEY IS AVAILABLE, ITEM 625.01M "SURVEY & STAKEOUT" IS INCLUDED IN CONTRACT FOR ALL NECESSARY WORK, AS DIRECTED BY ENGINEER.

SEE DRAWING NO. D017-3 FOR TABLE OF DRAINAGE WORK AND DITCH LINE WORK, TO BE DONE.

SEE DWG. NO. D017-4 FOR DOWN-SPOUT MODIFICATION DETAILS.

SEE DWG. NO. GN-1 FOR SERIALIZED ITEM NOTES.

SEE DWG. NO. D017-5 FOR PROPOSED CONC. PIPE AND MISCEL. DETAILS.

WORK TO BE DONE:

PIER #1 - CLEAN EXISTING DRAINAGE SYSTEM. PERFORM REPAIRS TO CONCRETE PIER ELEMENTS AND BEARING RESTORATION.

PIER #2 - DRAINAGE STRUCTURES AND DRAINAGE RUNS TO BE ABANDONED. MODIFY EXISTING DOWN-SPOUTS (REFER TO DRAWING NO. D017-4 FOR DETAILS). CLEAN THE REMAINING DRAINAGE SYSTEM. THIS WORK SHALL INCLUDE EXTENSION OF THE EXISTING DITCH LINE AND INSTALLATION OF A CULVERT PIPE. ALSO CLEANING AND RESHAPING THE EXISTING DITCH LINE. PERFORM REPAIRS TO CONCRETE PIER ELEMENTS AND BEARING RESTORATION.

PIER #3 - DRAINAGE STRUCTURES AND DRAINAGE RUNS TO BE ABANDONED. MODIFY EXISTING DOWN-SPOUTS (REFER TO DRAWING NO. D017-4 FOR DETAILS). CLEAN THE REMAINING DRAINAGE SYSTEM. THIS WORK SHALL ALSO INCLUDE CLEANING THE EXISTING DITCH LINE AND CLEANING EXISTING CULVERT PIPE. PERFORM REPAIRS TO CONCRETE PIER ELEMENTS AND BEARING RESTORATION.

PIER #4 - CLEAN EXISTING DRAINAGE SYSTEM TO INCLUDE ANY REPAIRS TO DRAINAGE STRUCTURES.
NORTH BOUND, PERFORM REPAIRS TO CONCRETE PIER ELEMENTS AND BEARING RESTORATION. SOUTH BOUND, REPLACE PIER CAP.

PIER #5 - CLEAN EXISTING DRAINAGE SYSTEM TO INCLUDE ANY REPAIRS TO DRAINAGE STRUCTURES AND INSTALLATION OF A NEW OUTLET SECTION (305mm RCCP)
NORTH BOUND, PERFORM REPAIRS TO CONCRETE PIER ELEMENTS AND BEARING RESTORATION. SOUTH BOUND, REPLACE PIER CAP.

PIER #6 (NB ONLY)- DRAINAGE STRUCTURES AND DRAINAGE RUNS TO BE ABANDONED. MODIFY EXISTING DOWN-SPOUTS (REFER TO DRAWING NO. D017-4 FOR DETAILS). CLEAN REMAINING DRAINAGE SYSTEM. PERFORM REPAIRS TO CONCRETE PIER ELEMENTS AND BEARING RESTORATION. CONSTRUCT A SWALE TO DIRECT RUNOFF AWAY FROM PIER AND RR PROPERTY.

PIER #9 (SB ONLY) - CLEAN EXISTING DRAINAGE SYSTEM.

SEE DRAWING NO. GP17-2 AND GP17-3 FOR COMPLETE LISTING OF WORK TO BE DONE.

ALL DIMENSIONS ARE IN m UNLESS OTHERWISE NOTED

AS BUILT REVISIONS

SIGNATURE | DATE

INTERSTATE 481
OVER
CSX RAILROAD YARD

DRAINAGE DETAILS

STATE OF NEW YORK
DEPARTMENT OF TRANSPORTATION

FILENAME	REGION	DATE	DRAWING NO.
305613AE.G1A	3	10/02	D017-1

CHECKED BY ____ DRAFTED BY ____ ESTIMATED BY ____ CHECKED BY ____ DESIGNED BY ____ JOB MANAGER ____ DESIGN SUPERVISOR ____

FED ROAD REG. NO.	STATE	CONTRACT NO.	SHEET NO.	TOTAL SHEETS
1	N.Y.	D259214	290	432

BRIDGE REHABILITATION PROJECT (ELEMENT SPECIFIC)
VARIOUS BRIDGES ON INTERSTATE 481
TOWNS OF DEWITT AND CICERO
COUNTY OF ONONDAGA
P.I.N. 305613 B.I.N. 1093571 & 1093572

NOTES:

THE PROPOSED DRAINAGE WORK IS BASED ON DRAINAGE INFORMATION FROM ORIGINAL CONTRACT F.I.S.H. 70-7.

THE CONTRACTOR SHALL VERIFY THIS INFORMATION WITH FIELD SITE INSPECTIONS.

SEE WORK TO BE DONE AND GENERAL NOTES ON DWG. NO. DD17-1.

SEE DWG. NO. DD17-3 FOR TABLE OF DRAINAGE WORK TO BE DONE.

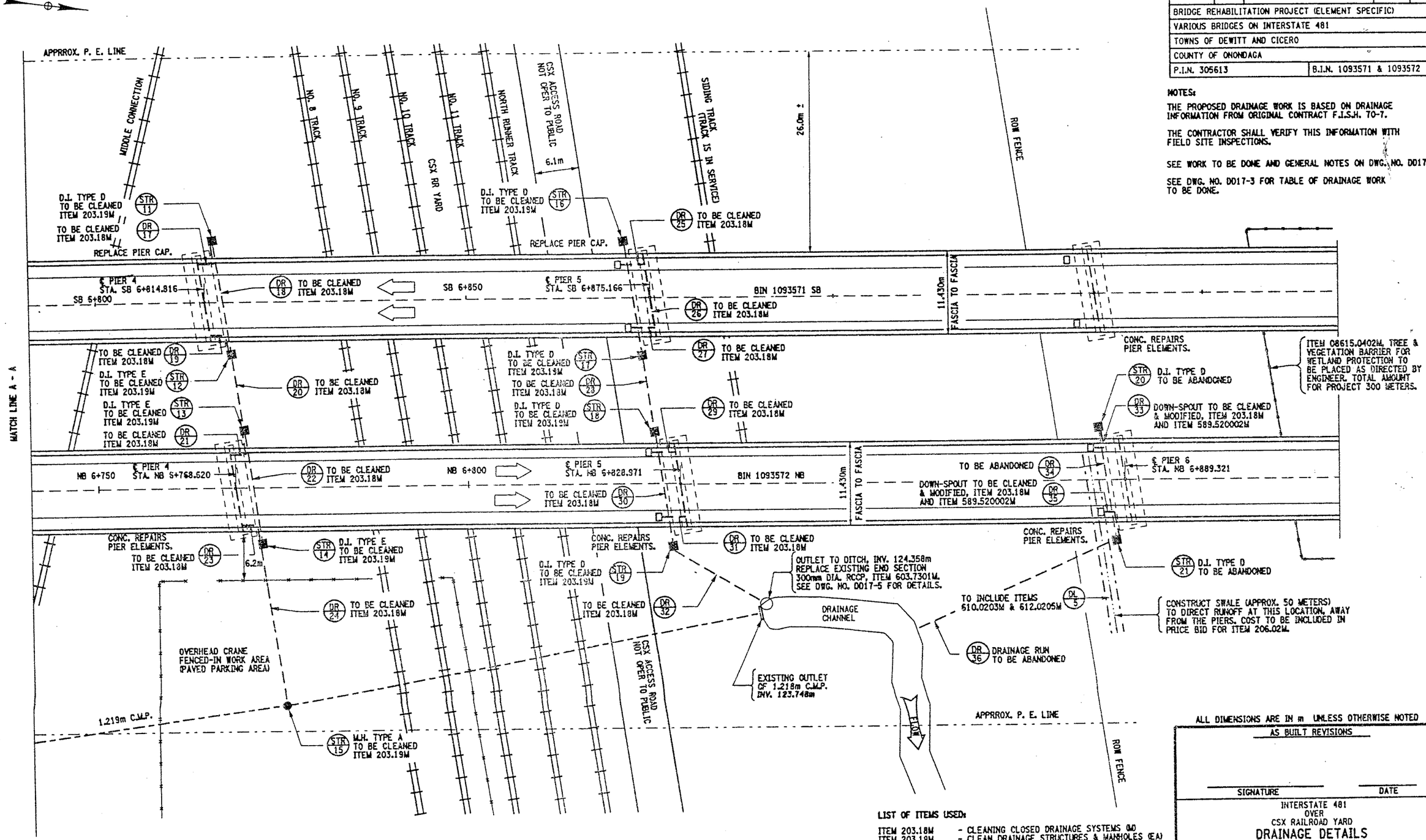

PLAN VIEW
NOT TO SCALE

LIST OF ITEMS USED:

ITEM 203.18M	- CLEANING CLOSED DRAINAGE SYSTEMS (M)
ITEM 203.19M	- CLEAN DRAINAGE STRUCTURES & MANHOLES (EA)
ITEM 206.02M	- TRENCH AND CULVERT EXCAVATION (CM)
ITEM 589.520002M	- REMOVAL OF EXISTING STEEL (EA)
ITEM 603.7301M	- REINF. CONC. PIPE END SECTION, 300mm (EA)
ITEM 610.0203M	- ESTABLISH TURF (SM)
ITEM 612.0205M	- EROSION CONTRAL MATERIAL (SM)
ITEM 08615.0402M	- TREE AND VEGTATION BARRIER (M)

ALL DIMENSIONS ARE IN m UNLESS OTHERWISE NOTED

AS BUILT REVISIONS

SIGNATURE DATE

INTERSTATE 481
OVER
CSX RAILROAD YARD
DRAINAGE DETAILS

STATE OF NEW YORK
DEPARTMENT OF TRANSPORTATION

FILENAME	REGION	DATE	DRAWING NO.
305613AE.G1A	3	10/02	DD17-2

DESIGN SUPERVISOR ____ JOB MANAGER ____ DESIGNED BY ____ CHECKED BY ____ ESTIMATED BY ____ DRAFTED BY ____ CHECKED BY ____

FED ROAD REG. NO.	STATE	CONTRACT NO.	SHEET NO.	TOTAL SHEETS
1	N.Y.	D259214	291	432

BRIDGE REHABILITATION PROJECT (ELEMENT SPECIFIC)
VARIOUS BRIDGES ON INTERSTATE 481
TOWNS OF DEWITT AND CICERO
COUNTY OF ONONDAGA
P.I.N. 305613 B.I.N. 1093571 & 1093572

DRAINAGE RUN TABLE

DR NO	FROM STRUCTURE	203mm C.I.P.	305mm R.C.C.P.	TO STRUCTURE	WORK TO BE DONE	REMARKS
1	B.I.N. 1093571 SB, PIER 2, WEST COLUMN	18.0m		STR. #1	ITEM 203.18M/589.520001M	CLEAN & OUTLET TO GROUND
2	STR. #1			STR. #2		TO BE ABANDONED
3	B.I.N. 1093571 SB, PIER 2, EAST COLUMN	18.0m		STR. #2	ITEM 203.18M/589.520001M	CLEAN & OUTLET TO GROUND
4	STR. #2			STR. #3		TO BE ABANDONED
5	B.I.N. 1093572 NB, PIER 2, WEST COLUMN	18.0m		STR. #3	ITEM 203.18M/589.520002M	CLEAN & OUTLET TO GROUND
6	STR. #3			STR. #4		TO BE ABANDONED
7	B.I.N. 1093572 NB, PIER 2, EAST COLUMN	18.0m		STR. #4	ITEM 203.18M/589.520002M	CLEAN & OUTLET TO GROUND
8	STR. #4			STR. #5	—	TO BE ABANDONED
9	B.I.N. 1093571 SB, PIER 3, WEST COLUMN	18.0m		STR. #6	ITEM 203.18M/589.520001M	CLEAN & OUTLET TO GROUND
10	STR. #6			STR. #7		TO BE ABANDONED
11	B.I.N. 1093571 SB, PIER 3, EAST COLUMN	18.0m		STR. #7	ITEM 203.18M/589.520001M	CLEAN & OUTLET TO GROUND
12	STR. #7			STR. #8		TO BE ABANDONED
13	B.I.N. 1093572 NB, PIER 3, WEST COLUMN	18.0m		STR. #8	ITEM 203.18M/589.520002M	CLEAN & OUTLET TO GROUND
14	STR. #8			STR. #9		TO BE ABANDONED
15	B.I.N. 1093572 NB, PIER 3, EAST COLUMN	18.0m		STR. #9	ITEM 203.18M/589.520002M	CLEAN & OUTLET TO GROUND
16	STR. #9			STR. #10		TO BE ABANDONED
17	B.I.N. 1093571 SB, PIER 4, WEST COLUMN	18.0m		STR. #11	ITEM 203.18M	CLEAN
18	STR. #11		14.6m	STR. #12	ITEM 203.18M	CLEAN
19	B.I.N. 1093571 SB, PIER 4, EAST COLUMN	18.0m		STR. #12	ITEM 203.18M	CLEAN
20	STR. #12		9.8m	STR. #13	ITEM 203.18M	CLEAN
21	B.I.N. 1093572 NB, PIER 4, WEST COLUMN	18.0m		STR. #13	ITEM 203.18M	CLEAN
22	STR. #13		14.6m	STR. #14	ITEM 203.18M	CLEAN
23	B.I.N. 1093572 NB, PIER 4, EAST COLUMN	18.0m		STR. #14	ITEM 203.18M	CLEAN
24	STR. #14		22.8m	STR. #15	ITEM 203.18M	CLEAN
25	B.I.N. 1093571 SB, PIER 5, WEST COLUMN	18.0m		STR. #16	ITEM 203.18M	CLEAN
26	STR. #16		13.4m	STR. #17	ITEM 203.18M	CLEAN
27	B.I.N. 1093571 SB, PIER 5, EAST COLUMN	18.0m		STR. #17	ITEM 203.18M	CLEAN
28	STR. #17		9.3m	STR. #18	ITEM 203.18M	CLEAN
29	B.I.N. 1093572 NB, PIER 5, WEST COLUMN	18.0m		STR. #18	ITEM 203.18M	CLEAN
30	STR. #18		14.6m	STR. #19	ITEM 203.18M	CLEAN
31	B.I.N. 1093572 NB, PIER 5, EAST COLUMN	18.0m		STR. #19	ITEM 203.18M	CLEAN
32	STR. #19		12.6m	TO OUTLET	ITEM 203.18M/603.7301M	CLEAN AND REPLACE END SECTION
33	B.I.N. 1093572 NB, PIER 6, WEST COLUMN	14.0m		STR. #20	ITEM 203.18M/589.520002M	CLEAN & OUTLET TO GROUND
34	STR. #20			STR. #21		TO BE ABANDONED
35	B.I.N. 1093572 NB, PIER 6, EAST COLUMN	14.0m		STR. #21	ITEM 203.18M/589.520002M	CLEAN & OUTLET TO GROUND
36	STR. #21			TO OUTLET		TO BE ABANDONED
	PIER #1 BOTH BRIDGES	64.0m				
	PIER #9 SB (ONLY)	32.0m				

EST. TOTAL OF ITEM 203.18M IS 525 METERS.

GENERAL NOTES:

THE QUANITIES SHOWN ARE FOR THE PURPOSE OF ESTIMATING THE PROJECT, THE CONTRACTOR SHALL VERIFY THESE QUANITIES.

ELEVATIONS TAKEN FROM ORIGINAL CONTRACT F.I.S.H. 70-7. CONTRACTORS SHALL VERIFY ELEVATIONS.

DRAINAGE RUNS AT THE TROUGHS ARE DIVIDED AT MID-POINT OF PIER.

DRAINAGE STRUCTURE TABLE

STR NO	LOCATION OF STRUCTURE	TYPE	EXISTING T.G.	EXISTING INV.	ITEM USED	REMARKS
1	B.I.N. 1093571 SB, PIER 2, WEST COLUMN	D.I. TYP D	125.882m	124.815m		TO BE ABANDONED
2	B.I.N. 1093571 SB, PIER 2, EAST COLUMN	D.I. TYP D	125.882m	124.724m		TO BE ABANDONED
3	B.I.N. 1093572 NB, PIER 2, WEST COLUMN	D.I. TYP D	125.882m	124.633m		TO BE ABANDONED
4	B.I.N. 1093572 NB, PIER 2, EAST COLUMN	D.I. TYP D	125.882m	124.541m		TO BE ABANDONED
5	35.4m EAST OF STRUCT. #4 (OUTLET INTO 1.219m C.M.P.)	M.H. TYP A	125.882m	124.358m		NO WORK PLANNED
6	B.I.N. 1093571 SB, PIER 3, WEST COLUMN	D.I. TYP D	126.034m	124.998m		TO BE ABANDONED
7	B.I.N. 1093571 SB, PIER 3, EAST COLUMN	D.I. TYP D	126.034m	124.876m		TO BE ABANDONED
8	B.I.N. 1093572 NB, PIER 3, WEST COLUMN	D.I. TYP D	126.034m	124.705m		TO BE ABANDONED
9	B.I.N. 1093572 NB, PIER 3, EAST COLUMN	D.I. TYP D	126.034m	124.678m		TO BE ABANDONED
10	30.8m EAST OF STRUCT. #9 (OUTLET INTO 1.219m C.M.P.)	M.H. TYP A	126.034m	124.571m	ITEM 203.19M	CLEAN
11	B.I.N. 1093571 SB, PIER 4, WEST COLUMN	D.I. TYP D	126.034m	125.120m	ITEM 203.19M	CLEAN
12	B.I.N. 1093571 SB, PIER 4, EAST COLUMN	D.I. TYP E	126.034m	124.876m	ITEM 203.19M	CLEAN
13	B.I.N. 1093572 NB, PIER 4, WEST COLUMN	D.I. TYP E	126.034m	124.785m	ITEM 203.19M	CLEAN
14	B.I.N. 1093572 NB, PIER 4, EAST COLUMN	D.I. TYP E	126.034m	124.693m	ITEM 203.19M	CLEAN
15	22.6m EAST OF STRUCT. #14 (OUTLET INTO 1.219m C.M.P.)	M.H. TYP A	126.034m	124.541m	ITEM 203.19M	CLEAN
16	B.I.N. 1093571 SB, PIER 5, WEST COLUMN	D.I. TYP D	125.943m	124.876m	ITEM 203.19M	CLEAN
17	B.I.N. 1093571 SB, PIER 5, EAST COLUMN	D.I. TYP D	125.943m	124.785m	ITEM 203.19M	CLEAN
18	B.I.N. 1093572 NB, PIER 5, WEST COLUMN	D.I. TYP D	125.943m	124.693m	ITEM 203.19M	CLEAN
19	B.I.N. 1093572 NB, PIER 5, EAST COLUMN	D.I. TYP D	125.943m	124.571m	ITEM 203.19M	CLEAN
20	B.I.N. 1093572 NB, PIER 6, WEST COLUMN	D.I. TYP D	126.339m	125.425m		TO BE ABANDONED
21	B.I.N. 1093572 NB, PIER 6, EAST COLUMN	D.I. TYP D	126.339m	124.663m		TO BE ABANDONED
		GRAND TOTAL OF 10 EACH OF ITEM 203.19M				

TABLE OF DITCH LINES

DL NO	APPROX. LOCATION	ESTIMATED LENGTH	ITEM USED
1	PIER #2, FROM STR. 1 TO EXISTING DITCH LINE	60 METERS ±	206.02M
2	FROM PROPOSED DITCH LINE EXTENTION TO STR. 5	30 METERS ±	15203.51M
3	FROM @ PIER #2 TO @ PIER #3	47 METERS ±	15203.51M
4	FROM @ STR. 10 TO @ STR. 6	70 METERS ±	15203.51M
5	FROM @ STR. 20 TO ROW FENCE	50 METERS ±	206.02M

LIST OF ITEMS USED:

ITEM 203.18M - CLEAN CLOSED DRAINAGE SYSTEMS (M)
ITEM 203.19M - CLEAN DRAINAGE STRUCTURES AND MANHOLES (EA)
ITEM 15203.51M - GRADING, CLEANING & RESHAPING EXISTING DITCH (M)
ITEM 206.02M - TRENCH & CULVERT EXCAVATION (CM)
ITEM 589.520001M - REMOVAL OF EXISTING STEEL (EA)
ITEM 589.520002M - REMOVAL OF EXISTING STEEL (EA)
ITEM 603.7301M - REINF. CONC. PIPE END SECTION (EA)
ITEM 610.0203M - ESTABLISH TURF (SM)
ITEM 612.0205M - EROSION CONTROL MATERIAL (SM)

DITCH CLEANING NOTE:

IN CONJUNCTION WITH THE USE OF ITEM 15203.51M - GRADING, CLEANING & RESHAPING EXISTING DITCHES. ITEM 612.0205M - EROSION CONTROL MATERIAL AND ITEM 610.0203M - ESTABLISH TURF, SHALL ALSO BE INCORPORATED WITH ANY DITCH WORK.

ALL DIMENSIONS ARE IN m UNLESS OTHERWISE NOTED

AS BUILT REVISIONS

SIGNATURE DATE

INTERSTATE 481
OVER
CSX RAILROAD YARD

TABLE OF DRAINAGE RUNS & STRUCTURES

STATE OF NEW YORK
DEPARTMENT OF TRANSPORTATION

FILENAME	REGION	DATE	DRAWING NO.
305613AE.01A	3	10/02	D017-3

CHECKED BY
DRAFTED BY
ESTIMATED BY
CHECKED BY
DESIGNED BY
JOB MANAGER
DESIGN SUPERVISOR

FED ROAD REG. NO.	STATE	CONTRACT NO.	SHEET NO.	TOTAL SHEETS
1	N.Y.	D259214	292	432

BRIDGE REHABILITATION PROJECT (ELEMENT SPECIFIC)
VARIOUS BRIDGES ON INTERSTATE 481
TOWNS OF DEWITT AND CICERO
ONONDAGA COUNTY
P.I.N. 305613 B.I.N. 1093571 & 1093572

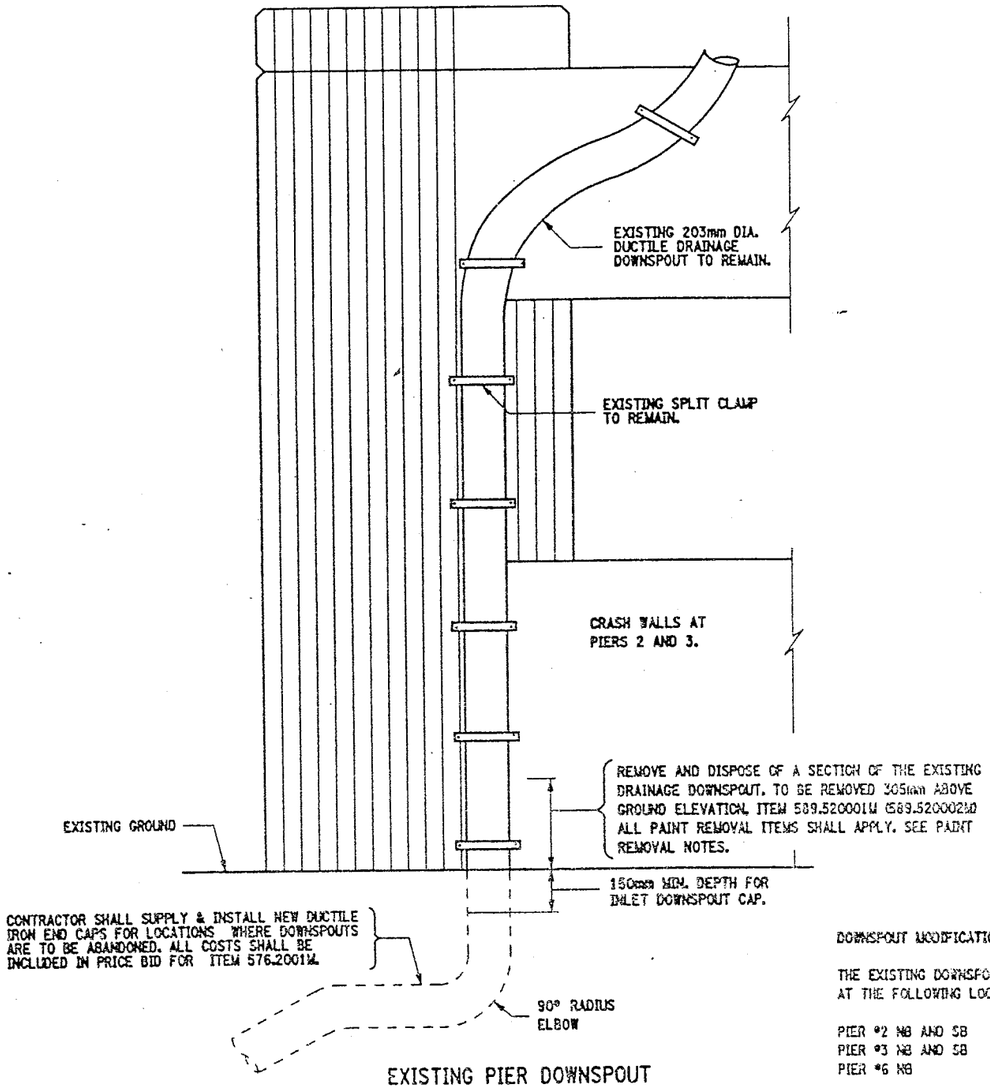

EXISTING PIER DOWNSPOUT

SCALE: 1 TO 10

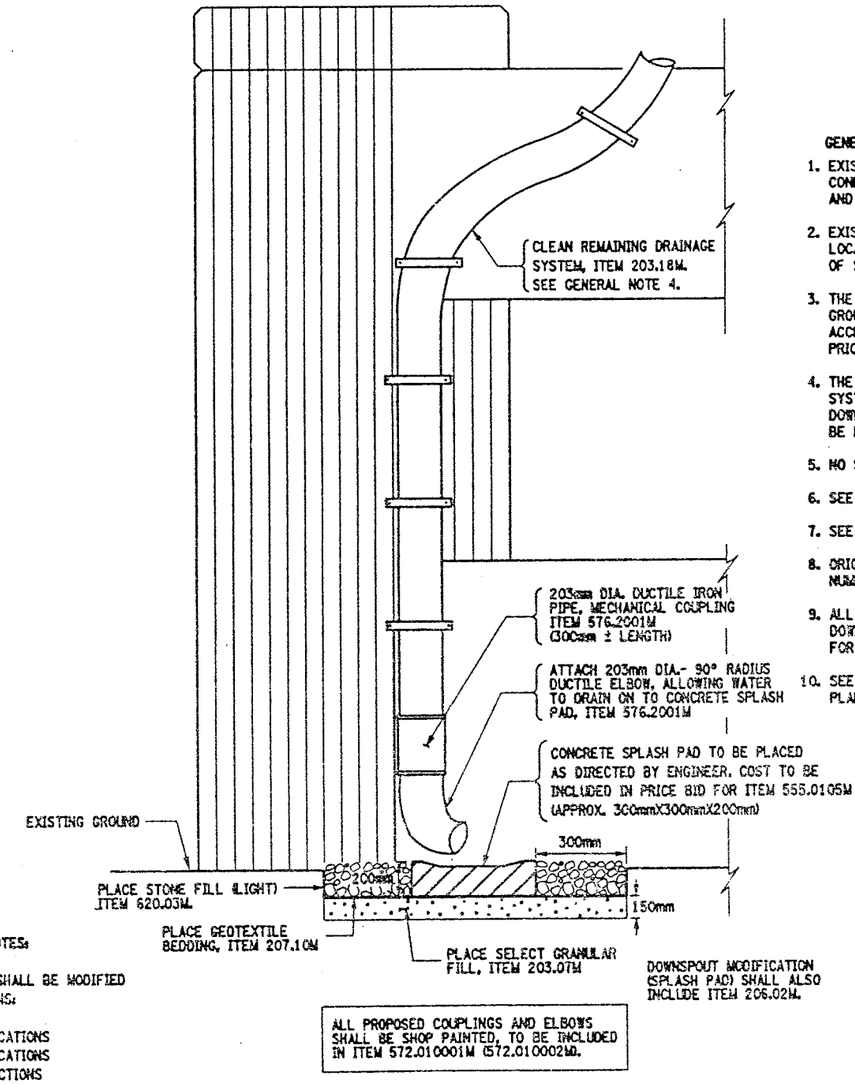

DOWNSPOUT MODIFICATION (SPLASH PAD) SHALL ALSO INCLUDE ITEM 206.02M.

ALL PROPOSED COUPLINGS AND ELBOWS SHALL BE SHOP PAINTED, TO BE INCLUDED IN ITEM 572.010001M (572.010002M).

PROPOSED PIER DOWNSPOUT

SCALE: 1 TO 10

GENERAL NOTES:

1. EXISTING INLET DOWNSPOUT, ADJACENT DRAINAGE STRUCTURES AND CONNECTING DRAINAGE RUNS AT PIER #2 NB & SB, PIER #3 NB & SB AND PIER #6 NORTHBOUND ONLY, TO BE ABANDONED.
2. EXISTING DRAINAGE PIPE (DUCTILE IRON PIPE) SHALL BE CUT OFF AT LOCATION SHOWN OR AS DIRECTED BY ENGINEER. AS PER SECTION 589 OF STANDARD SPECIF. (SEE MODIFICATION NOTES).
3. THE ABANDONED INLET DOWNSPOUT PIPE (THE PORTION STILL IN THE GROUND) SHALL BE CAPPED WITH A DUCTILE IRON CAP, IN A MANNER ACCEPTABLE TO THE ENGINEER. ALL COSTS SHALL BE INCLUDED IN BID PRICE FOR ITEM 576.2001M.
4. THE CONTRACTOR SHALL NOTE THAT CLEANING THE DRAINAGE SYSTEM SHALL INCLUDE SCUPPERS, HOPPERS, TROUGHS AND DOWNSPOUTS. THE CLEANING OF THE DRAINAGE SYSTEM SHALL BE FROM THE BRIDGE DECK TO THE OUTLETTED DOWNSPOUTS.
5. NO SHOP DRAWINGS SHALL BE REQUIRED FOR DOWNSPOUT ELBOW.
6. SEE DRAWINGS NO. D017-1 AND D017-2 FOR MODIFICATION LOCATIONS.
7. SEE DRAWING NO. D017-3 FOR TABLE OF DRAINAGE WORK TO BE DONE.
8. ORIGINAL CONTRACT PLANS F.I.S.H. 70-7 AND PREVIOUS CONTRACT NUMBER D251436.
9. ALL COSTS ASSOCIATED WITH THE INSTALLATION OF THE PROPOSED DOWNSPOUT ELBOW & COUPLING TO BE INCLUDED IN THE BID PRICE FOR ITEM 576.2001M.
10. SEE DRAWING NO. D017-8 FOR MISC. DRAINAGE CLEANING DETAILS AND PLAN VIEW OF SPLASH PAD WITH STONE FILL.

DOWNSPOUT MODIFICATION NOTES:

THE EXISTING DOWNSPOUTS SHALL BE MODIFIED AT THE FOLLOWING LOCATIONS:

PIER #2 NB AND SB	4 LOCATIONS
PIER #3 NB AND SB	4 LOCATIONS
PIER #6 NB	2 LOCTIONS
	10 LOCATIONS TOTAL

ANY NECESSARY WORK NEEDED TO PERFORM THESE MODIFICATIONS SHALL BE INCLUDED IN THE PRICE BID FOR ITEM 576.2001M.

ITEM CLARIFICATION NOTE:

ITEM 570.09NNNNM - ENVIRONMENTAL GROUND PROTECTION IS A SERIALIZED ITEM AND THE FOLLOWING PAY ITEMS SHALL BE INCORPORATED BY BRIDGE.

BIN 1093571 SB SHALL USE ITEM 570.090001M
BIN 1093572 NB SHALL USE ITEM 570.090002M

ITEM 572.01NNNNM - STRUCTURAL STEEL PAINT SYSTEM: SHOP APPLIED, IS A SERIALIZED ITEM AND THE FOLLOWING PAY ITEMS SHALL BE INCORPORATED BY BRIDGE.

BIN 1093571 SB SHALL USE ITEM 572.010001M
BIN 1093572 NB SHALL USE ITEM 572.010002M

ITEM 589.52NNNNM - REMOVAL OF EXISTING STEEL IS A SERIALIZED ITEM AND THE FOLLOWING PAY ITEMS SHALL BE INCORPORATED BY BRIDGE.

BIN 1093571 SB SHALL USE ITEM 589.520001M
BIN 1093572 NB SHALL USE ITEM 589.520002M

ITEM 571.01NNNNM - TREATMENT AND DISPOSAL OF PAINT REMOVAL WASTE, IS A SERIALIZED ITEM AND THE FOLLOWING PAY ITEMS SHALL BE INCORPORATED BY BRIDGE.

BIN 1093571 SB SHALL USE ITEM 571.010001M
BIN 1093572 NB SHALL USE ITEM 571.010002M

ALL DIMENSIONS ARE IN m UNLESS OTHERWISE NOTED

PAINT REMOVAL NOTES:

PAINT REMOVAL WORK SHALL BE DONE IN ACCORDANCE WITH REQUIREMENTS OF SECTION 741 OF STANDARD SPECIF.

REMOVE EXISTING PAINT FROM SPECIFIED ELEMENTS, PRIOR TO ANY CUTTING OR WELDING.

PAINT SHALL BE REMOVED TO 100mm MIN. FROM THE PROPOSED WELD/CUT LOCATON.

IN CONJUNCTION WITH THE USE OF ITEM 16570.72M - LOCALIZED VACCUM CONTAINED CLEANING OF STRUCTURAL STEEL. ITEM 570.09NNNNM - ENVIRONMENTAL GROUND PROTECTION AND ITEM 571.01NNNNM - TREATMENT AND DISPOSAL OF PAINT REMOVAL WASTE, SHALL ALSO BE INCORPORATED DURING PAINT REMOVAL OPERATIONS, (SEE ITEM CLARIFICATION NOTE, THIS SHEET).

THIS PAINT REMOVAL OPERATION SHALL BE REGARDED AS "EXEMPT SMALL GENERATOR STATUS" AND ALL PROVISIONS OF PART 372, 6 NYCRR SHALL APPLY .

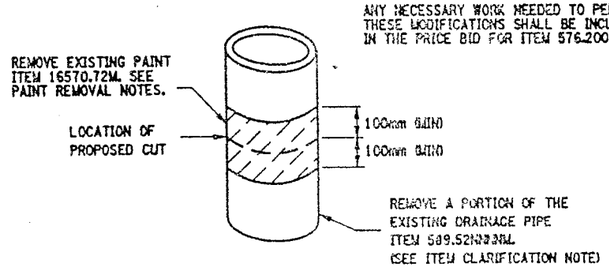

LIMITS OF PAINT REMOVAL

NOT TO SCALE

ITEMS USED:

ITEM 203.07M	- SELECT GRANULAR FILL, (CM)
ITEM 203.18M	- CLEAN CLOSED DRAINAGE SYSTEMS (m)
ITEM 206.02M	- TRENCH & CULVERT EXCAV. (CM)
ITEM 207.10M	- GEOTEXTILE BEDDING, (SM)
ITEM 555.0105M	- CONCRETE FOR STRUCTURES, CLASS "A" (CM)
ITEM 570.090001M	- ENVIRONMENTAL GROUND PROTECTION (LS)
ITEM 570.090002M	- ENVIRONMENTAL GROUND PROTECTION (LS)
ITEM 16570.72M	- LOCALIZED VACUUM CONT. CLEANING STRUCT. STEEL (SM)
ITEM 571.010001M	- TREATMENT & DISPOSAL OF PAINT REMOVAL WASTE (CM)
ITEM 571.010002M	- TREATMENT & DISPOSAL OF PAINT REMOVAL WASTE (CM)
ITEM 572.010001M	- STRUCTURAL STEEL PAINT SYSTEM: SHOP APPLIED (SM)
ITEM 572.010002M	- STRUCTURAL STEEL PAINT SYSTEM: SHOP APPLIED (SM)
ITEM 589.520001M	- REMOVAL OF EXISITNG STEEL (EA)
ITEM 589.520002M	- REMOVAL OF EXISTING STEEL (EA)
ITEM 576.2001M	- DOWNSPOUT SYSTEM, DUCTILE IRON (m)
ITEM 620.03M	- STONE FILL, LIGHT (CM)

AS BUILT REVISIONS

SIGNATURE DATE

INTERSTATE 481 NB AND SB
OVER
CSX RAILROAD YARD

MODIFICATION OF PIER DOWNSPOUTS

STATE OF NEW YORK
DEPARTMENT OF TRANSPORTATION

FILENAME	REGION	DATE	DRAWING NO.
305613AE.D1A	3	10/02	D017-4

DESIGN SUPERVISOR ____ JOB MANAGER ____ ESTIMATED BY ____ DRAFTED BY ____ DESIGNED BY ____ CHECKED BY ____ CHECKED BY ____

FED ROAD REG. NO.	STATE	CONTRACT NO.	SHEET NO.	TOTAL SHEETS
1	N.Y.	D259214	293	432

BRIDGE REHABILITATION PROJECT (ELEMENT SPECIFIC)
VARIOUS BRIDGES ON INTERSTATE 481
TOWNS OF DEWITT AND CICERO
ONONDAGA COUNTY
P.I.N. 305613 B.I.N. 1093571 & 1093572

TYPICAL DITCH LINE NOTES:

1) SEE TABLE OF DITCH LINES DWG NO. D017-3.

2) DIMENSIONS SHOWN ARE FOR ROUGH CALCULATIONS.

3) ITEMS 610.0203M AND ITEM 612.0205M ARE TO BE INCLUDE AT ALL LOCATIONS WHERE ITEM 15203.51M - CLEANING EXISTING DITCH LINES IS USED.

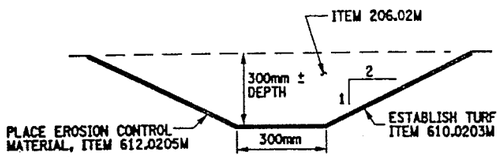

TYPICAL DITCH LINE
DITCH LINE EXTENSION AT PIER #2
NOT TO SCALE

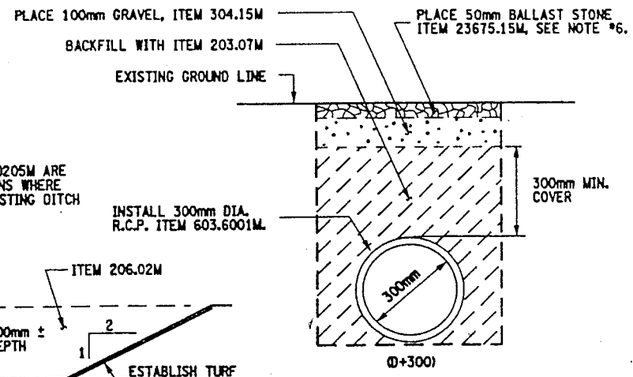

(D+300)

PROPOSED CONCRETE PIPE SECTION X-X
NOT TO SCALE

CULVERT PIPE NOTES:

1) EXTEND EXISTING DITCH LINE FROM ITS CURRENT LOCATION (SEE DWG. NO. D017-1) APPROXIMATELY 20 METER EAST OF PIER #2. TO 5 METERS BEYOND PIER #2, WEST SIDE. THE COST TO BE PAID UNDER ITEM 206.02M. REFER TO "TABLE OF DITCH LINES" DWG. NO. D017-3 FOR DITCH LINE NUMBER #1.

2) INSTALL PIPE CULVERT TO PROVIDE RAILROAD (CSX) ACCESS TO PIER 2. THE EXACT LOCATION OF THE PROPOSED CULVERT SHALL BE DETERMINED BY THE ENGINEER.

3) THE PROPOSED CULVERT PIPE SLOPE TO MATCH THE SLOPE OF THE EXISTING DITCH LINE. NOTE, NO EXISTING SURVEY AVAILABLE, ITEM 625.01M, "SURVEY & STAKEOUT" IS INCLUDED IN CONTRACT. NO PROPOSED INVERT ELEVATIONS GIVEN.

4) REFER TO NYS STANDARD SHEETS M203-4, M203-5 M203-6R1 AND M603-1.

5) NO LEAKAGE TEST REQUIRED.

6) FINISHED GRADE AT PROPOSED CULVERT INSTALLATION PLACEMENT OF ITEM 23675.15M, SHALL BE APPROVED BY CSXT DISTRICT ENGINEER. IF THIS MATERIAL DOES NOT SATISFY THE RAILROAD REQUIREMENTS FOR "APPROVED RAILROAD BALLAST STONE", THEN THE APPROPRIATE MATERIAL SHALL BE SUBSTITUTED FOR ITEM 23675.15M AT NO ADDITIONAL COST TO THE STATE.

7) THE CLASS & SIZE REQUIREMENTS FOR THE BALLAST STONE ITEM 23675.15M, SHALL BE DETERMINED BY THE ENGINEER.

8) INSTALLATION OF R.C.P. END-SECTIONS SHALL INCLUDE STONE FILL, ITEM 620.03M. (PLACED AT INLET & OUTLET OF RCP END- SECTIONS, A0BE).

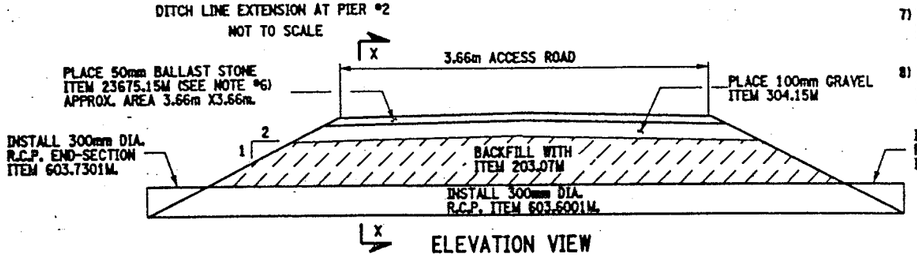

ELEVATION VIEW
NOT TO SCALE

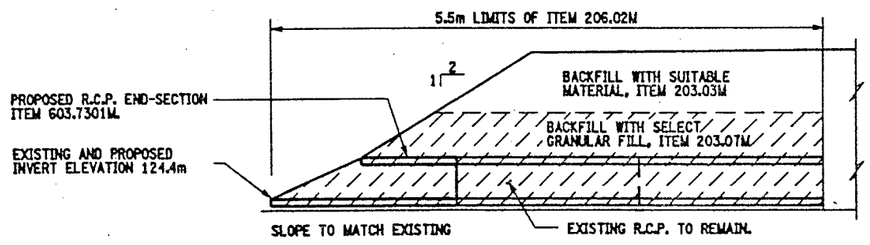

PROPOSED CONCRETE END-SECTION
SECTION VIEW
(DRAINAGE RUN #32)
NOT TO SCALE

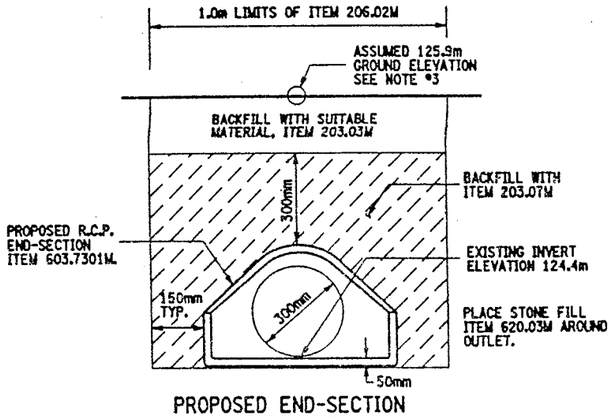

PROPOSED END-SECTION
END VIEW
NOT TO SCALE

END SECTION NOTES:

1) AT THE OUTLET OF DRAINAGE RUN #32 (SEE DWG. NO. D017-2) REMOVE EXISTING R.C.P. END-SECTION AND INSTALL A NEW CONCRETE PIPE END-SECTION, ITEM 603.7301M.

2) ANCHORING OF THE PROPOSED END-SECTION SHALL BE AS PER SECTION 603-3.06 OF STANDARD SPCIFICATIONS AND TO THE SATISFACTION OF THE ENGINEER. COST BE INCLUDED IN THE BID PRICE FOR ITEM 603.7301M.

3) THE ASSUMED GROUND ELEVATION IS TAKEN FROM THE DRAINAGE STRUCTURE TABLE ON DRAWING NO. D017-3 USING STRUCTURE #19 EXISTING T.G. ELEVATION. CONTRACTOR SHALL VERIFY ALL ELEVATIONS, ITEM 625.01M.

4) REFER TO NYS STANDARD SHEET M603-1.

5) INSTALLATION OF R.C.P. END-SECTION SHALL INCLUDE STONE FILL, ITEM 620.03M. (PLACED A.O.B.E.)

ITEMS USED:

ITEM 203.03M - EMBANKMENT IN PLACE (CM)
ITEM 203.07M - SELECT GRANULAR FILL (CM)
ITEM 206.02M - TRENCH & CULVERT EXCAVATION (CM)
ITEM 304.15M - SUBBASE COURSE, OPTIONAL (CM)
ITEM 603.6001M - REINFORCED CONCRETE PIPE CLASS III (M)
ITEM 603.7301M - REINFORCED CONCRETE PIPE END SECTION (EACH)
ITEM 610.0203M - ESTABLISHING TURF (SM)
ITEM 612.0205M - EROSION CONTROL MATERIAL, CLASS II TYPE B (SM)
ITEM 620.03M - STONE FILL, LIGHT, (CM)
ITEM 625.01M - SURVEY & STAKEOUT (L.S.)
ITEM 23675.15M - FURNISH AND PLACE STONE BALLAST SURFACING COURSE (MT)

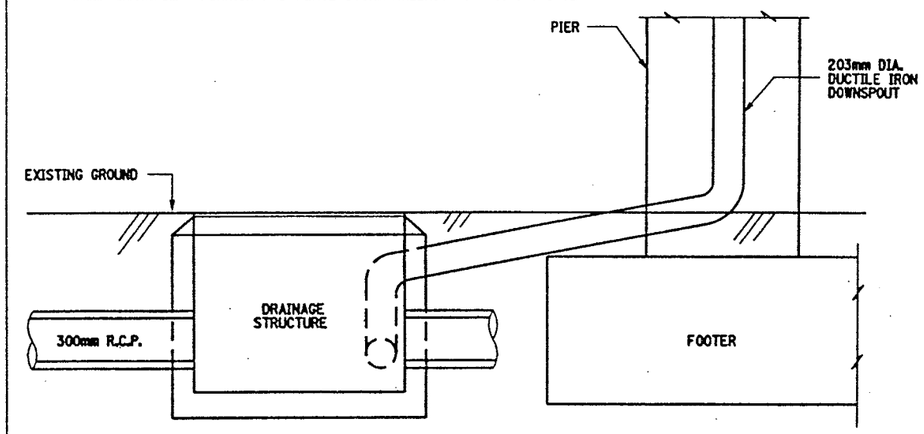

TYPICAL ELEVATION VIEW
DRAINAGE STRUCTURES ADJACENT TO PIERS (RR YARD).
NOT TO SCALE

DRAINAGE STRUCTURE NOTES:

1) SEE DRAWING NO. D017-1 & D017-2 FOR DRAINAGE STRUCTURE LOCATIONS.

2) SEE DRAWING NO. D017-3 FOR TABLE OF DRAINAGE STRUCTURES, TO BE CLEANED OR ABANDONED.

3) REFER TO DRAWING NO. D017-4 FOR MODIFICATION OF DOWNSPOUT DETAILS.

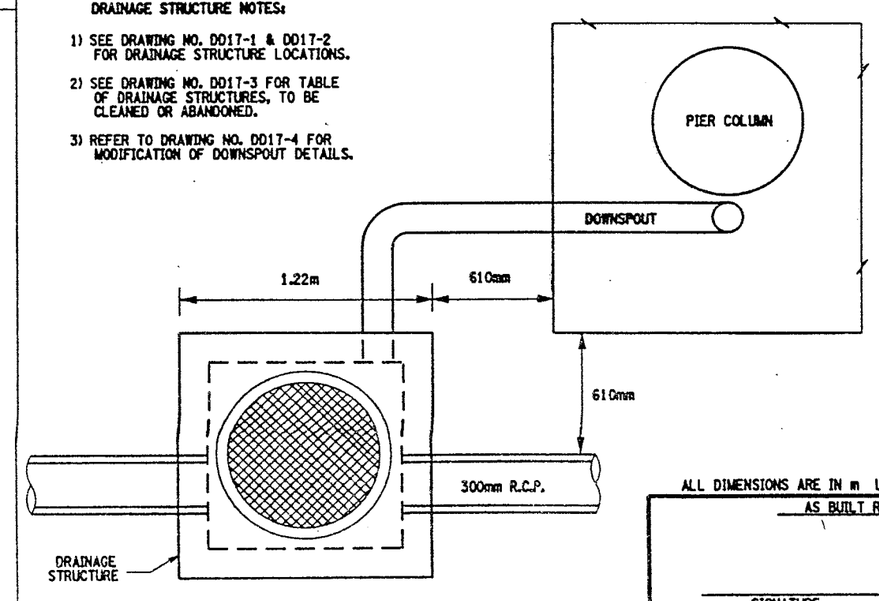

TYPICAL PLAN VIEW
DRAINAGE STRUCTURES ADJACENT TO PIERS (RR YARD).
NOT TO SCALE

ALL DIMENSIONS ARE IN m UNLESS OTHERWISE NOTED

AS BUILT REVISIONS

SIGNATURE DATE

INTERSTATE 481 NB AND SB
OVER
CSX RAILROAD YARD
MISCELLANEOUS DETAILS

STATE OF NEW YORK
DEPARTMENT OF TRANSPORTATION

FILENAME	REGION	DATE	DRAWING NO.
305613AE.D1A	3	10/02	D017-5

CHECKED BY
DRAFTED BY
ESTIMATED BY
CHECKED BY
DESIGNED BY
JOB MANAGER
DESIGN SUPERVISOR

FED ROAD REG. NO.	STATE	CONTRACT NO.	SHEET NO.	TOTAL SHEETS
1	N.Y.	D259214	294	432

BRIDGE REHABILITATION PROJECT (ELEMENT SPECIFIC)
VARIOUS BRIDGES ON INTERSTATE 481
TOWNS OF DEWITT AND CICERO
ONONDAGA COUNTY
P.I.N. 305613 B.I.N. 1093571 & 1093572

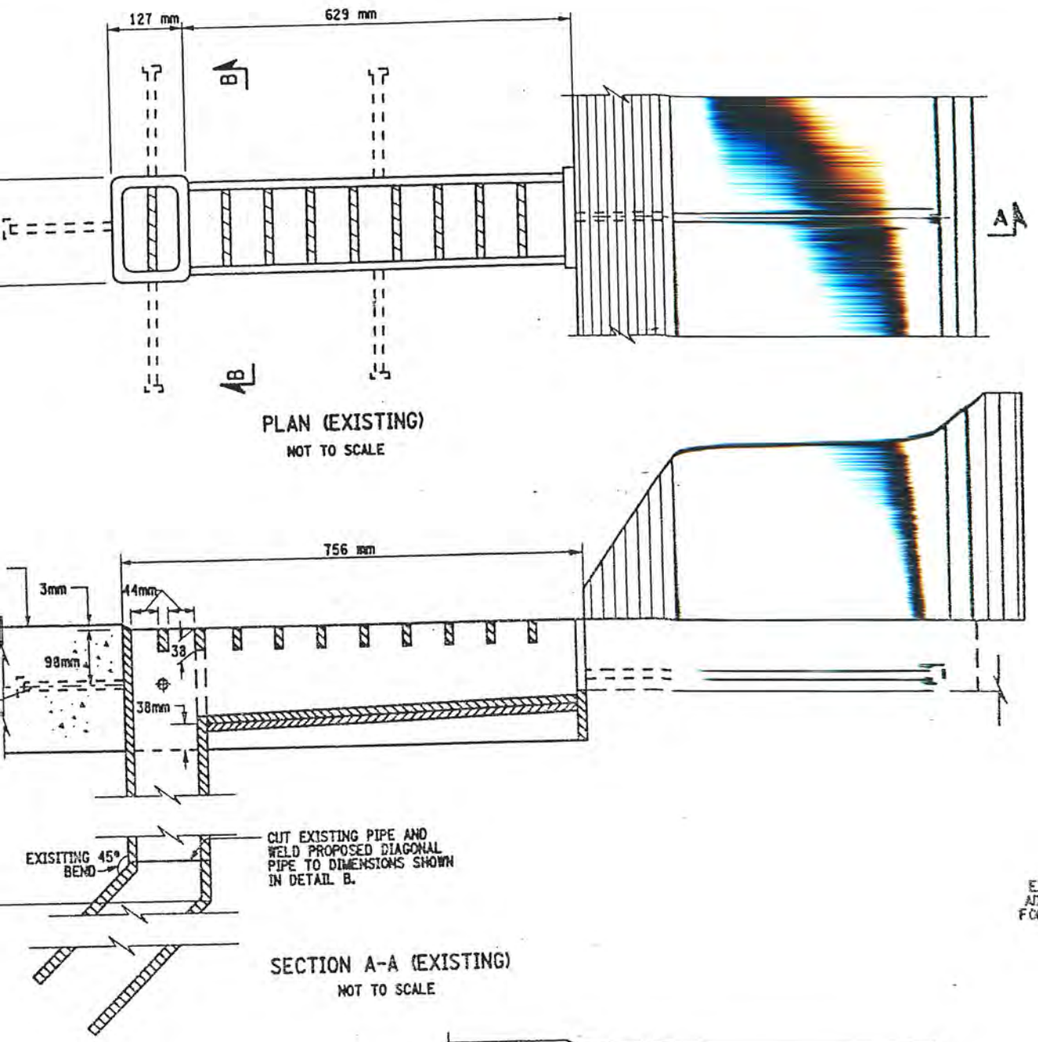

PLAN (EXISTING)
NOT TO SCALE

SECTION A-A (EXISTING)
NOT TO SCALE

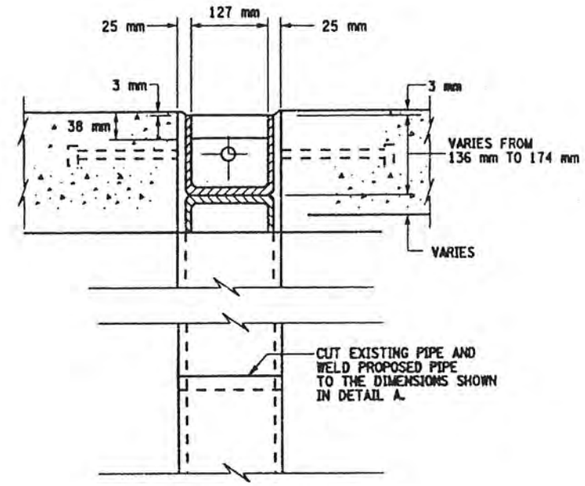

SECTION B-B
NOT TO SCALE

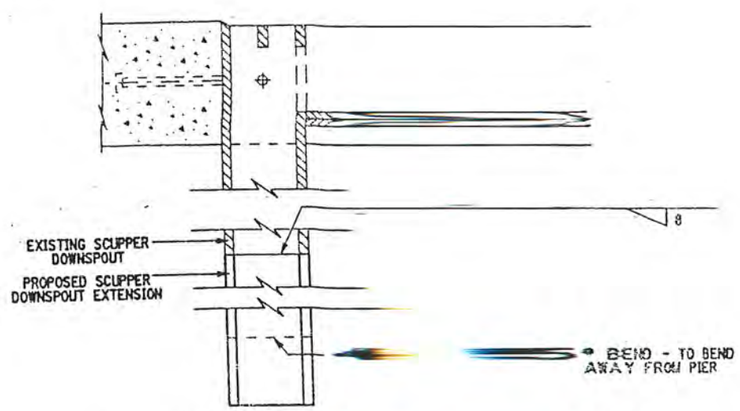

DETAIL B (PROPOSED)
NOT TO SCALE

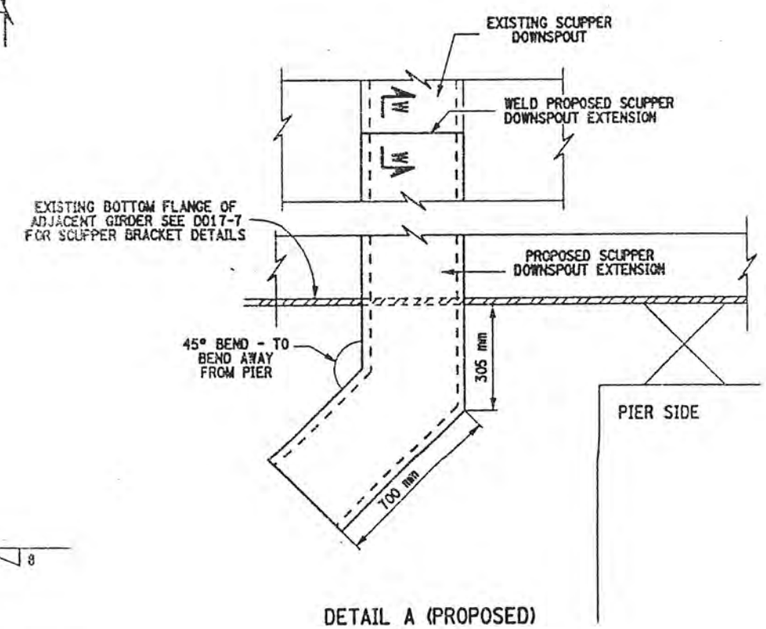

DETAIL A (PROPOSED)
NOT TO SCALE

NOTES:

1) ALL WORK AND MATERIALS NECESSARY FOR SCUPPER ADJUSTMENT AND EXTENSION SHALL BE INCLUDED IN PRICE BID FOR ITEM 590.01M.

SCUPPER LOCATION TABLE

	LOCATION	EAST CURB LINE	WEST CURB LINE
SOUTHBOUND BIN: 1093571	SOUTH SIDE OF PIER 8	1	1
	SOUTH SIDE OF PIER 10	1	—
	SOUTH SIDE OF PIER 11	1	—
	SOUTH SIDE OF PIER 12	1	—
	SOUTH SIDE OF PIER 13	1	—
	SOUTH SIDE OF PIER 14	1	—
NORTHBOUND BIN: 1093572	SOUTH SIDE OF PIER 8	1	1
	SOUTH SIDE OF PIER 9	1	1
	SOUTH SIDE OF PIER 10	1	—
	SOUTH SIDE OF PIER 11	1	—
	SOUTH SIDE OF PIER 12	1	—
	SOUTH SIDE OF PIER 13	1	—
	SOUTH SIDE OF PIER 14	1	—
TOTALS		13	3

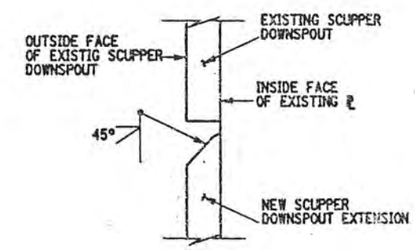

SECTION W-W
NOT TO SCALE

LIST OF ITEMS USED:

ITEM 590.01M - VERT. ADJUSTMENT OF BRIDGE DRAINAGE DEVICES (EA)

ALL DIMENSIONS ARE IN m UNLESS OTHERWISE NOTED

AS BUILT REVISIONS

SIGNATURE DATE

INTERSTATE 481 NB AND SB
OVER
CSX RAILROAD YARD
SCUPPER EXTENSIONS

STATE OF NEW YORK
DEPARTMENT OF TRANSPORTATION

FILENAME	REGION	DATE	DRAWING NO.
305613AE.DS1	3	10/02	D017-6

FED ROAD REG. NO.	STATE	CONTRACT NO.	SHEET NO.	TOTAL SHEETS
1	N.Y.	D259214	295	432

BRIDGE REHABILITATION PROJECT (ELEMENT SPECIFIC)
VARIOUS BRIDGES ON INTERSTATE 481
TOWNS OF DEWITT AND CICERO
ONONDAGA COUNTY
P.I.N. 305613 | B.I.N. 1093571 & 1093572

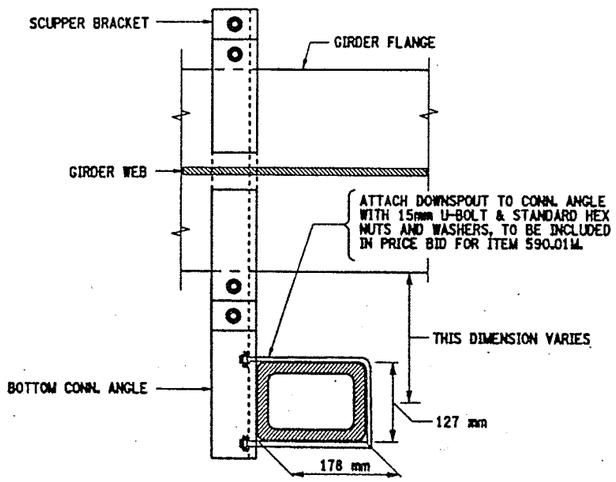

PROPOSED SCUPPER BRACKET DETAILS
PLAN VIEW

SCALE 1:10

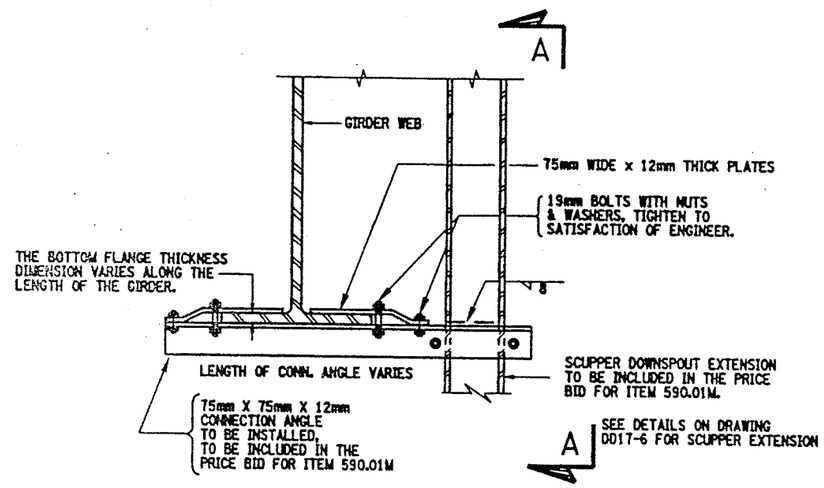

PROPOSED SCUPPER BRACKET DETAILS

SCALE 1:10

NOTES

1. AN APPROVED TYPE OF REMOVABLE DIFFUSER SHALL BE INSTALLED ON ALL OPEN-ENDED SCUPPERS, COST TO BE INCLUDE IN THE PRICE BID FOR ITEM 590.01M.
2. EVERY OPEN DRAINAGE SCUPPER DOWNSPOUT SHALL BE EXTENDED TO 305mm MINIMUM, BELOW THE BOTTOM FLANGE, COST TO BE INCLUDED IN THE PRICE BID FOR ITEM 590.01M.
3. ALL PROPOSED BRACKETS AND CONNECTION HARDWARE SHALL BE FABRICATED FROM ASTM A36M STEEL.
4. ALL PROPOSED BRACKETS SHALL BE SHOP PAINTED PRIOR TO INSTALLATION COST TO BE INCLUDED IN THE PRICE BID FOR ITEM 590.01 M (DOWNSPOUT EXCLUDED).
5. NO WELDING TO, OR CUTTING OF, OR DRILLING INTO ANY STRUCTURAL STEEL WILL BE ALLOWED.
6. SCUPPER EXTENSION SHALL BE GALVANIZED IN ACCORDANCE WITH N.Y.S. STD. SPECIFICATIONS SUBSECTION 719-01.

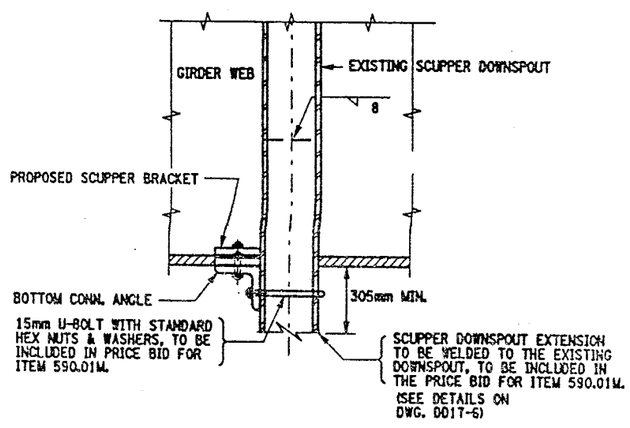

PROPOSED SCUPPER BRACKET DETAILS
SECTION A-A

SCALE 1:10

LIST OF ITEMS USED:

ITEM 590.01M - VERTICAL ADJUSTMENT OF BRIDGE DRAINAGE DEVICES (EA)

ALL DIMENSIONS ARE IN mm UNLESS OTHERWISE NOTED

AS BUILT REVISIONS

SIGNATURE | DATE

INTERSTATE 481 NB AND SB
OVER
CSX RAILROAD YARD
SCUPPER EXTENSIONS

STATE OF NEW YORK
DEPARTMENT OF TRANSPORTATION

FILENAME	REGION	DATE	DRAWING NO.
305613AE.DS1	3	10/02	D017-7

CHECKED BY
DRAFTED BY
ESTIMATED BY
CHECKED BY
DESIGNED BY
JOB MANAGER
DESIGN SUPERVISOR

FED ROAD REG. NO.	STATE	CONTRACT NO.	SHEET NO.	TOTAL SHEETS
1	N.Y.	D259214	296	432

BRIDGE REHABILITATION PROJECT (ELEMENT SPECIFIC)

VARIOUS BRIDGES ON INTERSTATE 481

TOWNS OF DEWITT AND CICERO

ONONDAGA COUNTY

P.I.N. 305613 | B.I.N. 1093571 & 1093572

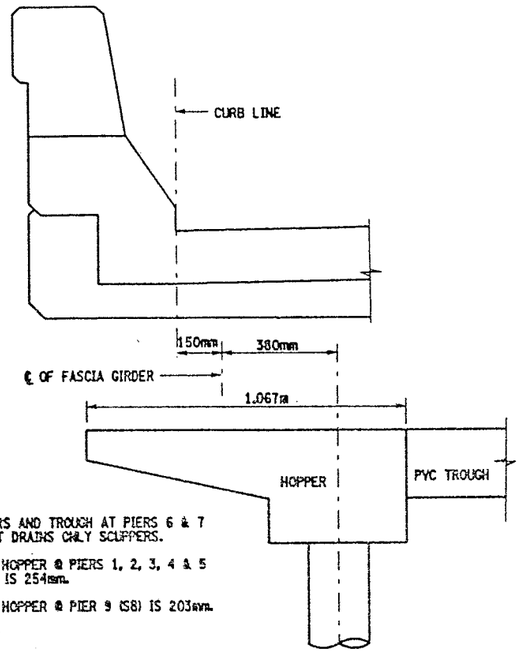

NO HOPPERS AND TROUGH AT PIERS 6 & 7 DOWNSPOUT DRAINS ONLY SCUPPERS.

WIDTH OF HOPPER @ PIERS 1, 2, 3, 4 & 5 (NB & SB) IS 254mm.

WIDTH OF HOPPER @ PIER 9 (SB) IS 203mm.

DRAINAGE SYSTEM HOPPER DETAIL
ELEVATION VIEW

NOT TO SCALE

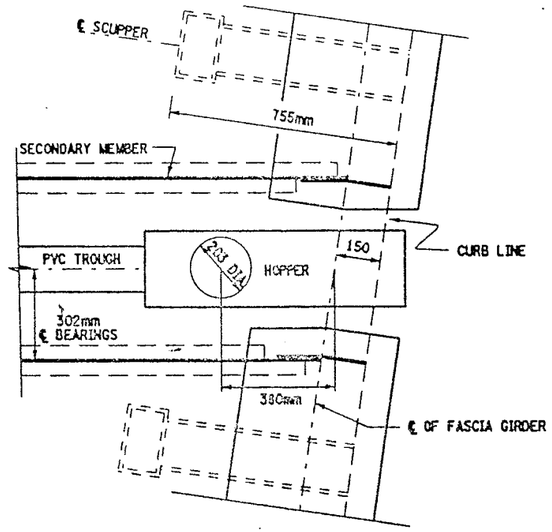

PLAN VIEW OF DRAINAGE DETAIL

NOT TO SCALE

NOTES:

SPLASH PAD & STONE FILLING TO BE PLACED AT EACH MODIFIED DOWNSPOUT LOCATION (PIER'S 2 & 3). STONE FILL SHALL BE PLACED FROM SPLASH PAD TO ℄ OF DITCH LINE.

TYPICAL WIDTH OF STONE FILLING 900mm.

PROPOSED STONE FILL SLOPE TO MATCH EXISTING SLOPE.

PLACEMENT OF SPLASH PAD AND STONE FILL SHALL INCLUDE ITEM 206.02M.

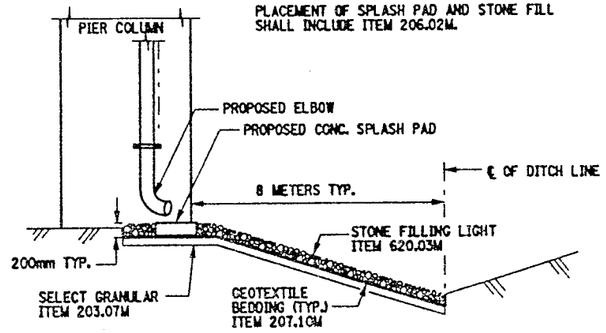

MISC. SPLASH PAD AND STONE FILL DETAIL

NOT TO SCALE

CLEAN DRAINAGE SYSTEM NOTE:

THE FOLLOWING CLOSED DRAINAGE SYSTEMS SHALL BE CLEANED UNDER THIS CONTRACT.

BIN 1093571 - PIERS 1, 2, 3, 4, 5, 6 & 9
BIN 1093572 - PIERS 1, 2, 3, 4, 5 & 6

NOTE, PIER #6 (BOTH STRUCTURES) THE TYPE OF BRIDGE JOINT IS AN ARMORED JOINT WITH COMPRESSION SEAL. THE DOWNSPOUTS ARE CONNECTED TO THE BRIDGE SCUPPERS.

THE CLEANING OF THE EXISTING DRAINAGE SYSTEM (ITEM 203.18M) SHALL BE FROM HOPPER (FASCIA GIRDER) TO HOPPER (FASCIA GIRDER) AND SHALL INCLUDE THE PVC TROUGH AND THE ENTIRE DOWNSPOUT SYSTEM (DIA. OF DOWNSPOUTS VARY) FROM HOPPERS TO OUTLET. REFER TO DWG. NO. D017-1 THRU DWG. NO. D017-4 FOR DRAINAGE DETAILS AND PROPOSED MODIFICATIONS TO PIER DOWNSPOUTS.

FOR QUANTITIES OF ITEMS SEE DRAINAGE RUN TABLE ON DRAWING NO. D017-3.

CONTRACTOR SHALL TAKE CARE WHEN PERFORMING CLEANING OPERATION NOT TO DAMAGE THE EXISTING DRAINAGE SYSTEM. ANY DAMAGE CAUSED BY CONTRACTOR'S OPERATIONS SHALL BE REPAIRED OR REPLACED AS DEEMED NECESSARY BY THE ENGINEER AT NO ADDITIONAL COST TO THE STATE.

DRAINAGE RUN TABLE ON DWG. NO. D017-3, THE DRAINAGE TROUGHS ARE DIVIDED AT MID-POINT OF PIER.

SEE ORIGINAL CONTRACT PLANS F.I.S.H. 70-7 FOR EXISTING PIER ELEVATIONS.

SEE DRAWING NO. D017-4 FOR PROPOSED PIER DOWNSPOUT DETAILS.

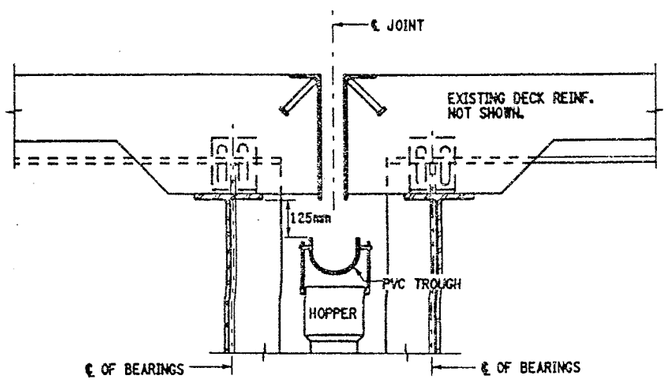

EXISTING PIER
OPEN JOINT TYPICAL

BIN 1093571 - PIERS 1, 2, 3, 4, 5 & 9
BIN 1093572 - PIERS 1, 2, 3, 4 & 5

NOT TO SCALE

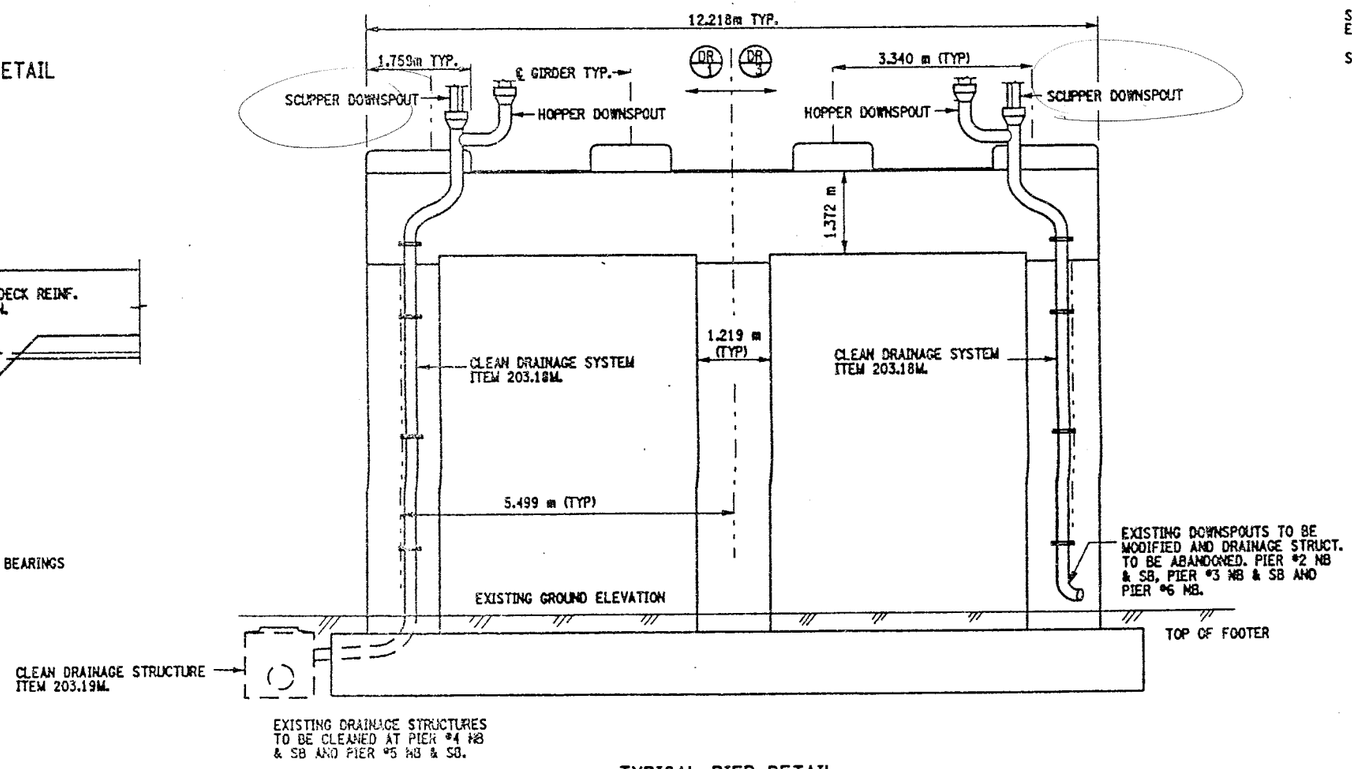

TYPICAL PIER DETAIL

NOT TO SCALE

ITEMS USED:

ITEM 203.07M - SELECT GRANULAR FILL, (CM)
ITEM 207.10M - GEOTEXILE BEDDING, (SM)
ITEM 203.18M - CLEAN CLOSED DRAINAGE SYSTEMS (LF)
ITEM 203.19M - CLEAN DRAINAGE STRUCTURES & MANHOLES (EA)
ITEM 620.03M - STONE FILL, LIGHT, (CM)

ALL DIMENSIONS ARE IN mm UNLESS OTHERWISE NOTED

AS BUILT REVISIONS

SIGNATURE | DATE

INTERSTATE 481 OVER CSX RR YARD

DRAINAGE CLEANING DETAILS

STATE OF NEW YORK
DEPARTMENT OF TRANSPORTATION

FILENAME	REGION	DATE	DRAWING NO.
305613AE.DS1	3	10/02	D017-8

DESIGN SUPERVISOR ____ JOB MANAGER ____ DESIGNED BY ____ CHECKED BY ____ DRAFTED BY ____ CHECKED BY ____ ESTIMATED BY ____

FED ROAD REG. NO.	STATE	CONTRACT NO.	SHEET NO.	TOTAL SHEETS
1	N.Y.	D259214	297	432

BRIDGE REHABILITATION PROJECT (ELEMENT SPECIFIC)
VARIOUS BRIDGES ON INTERSTATE 481
TOWNS OF DEWITT AND CICERO
ONONDAGA COUNTY
P.I.N. 305613 B.I.N. 1093571

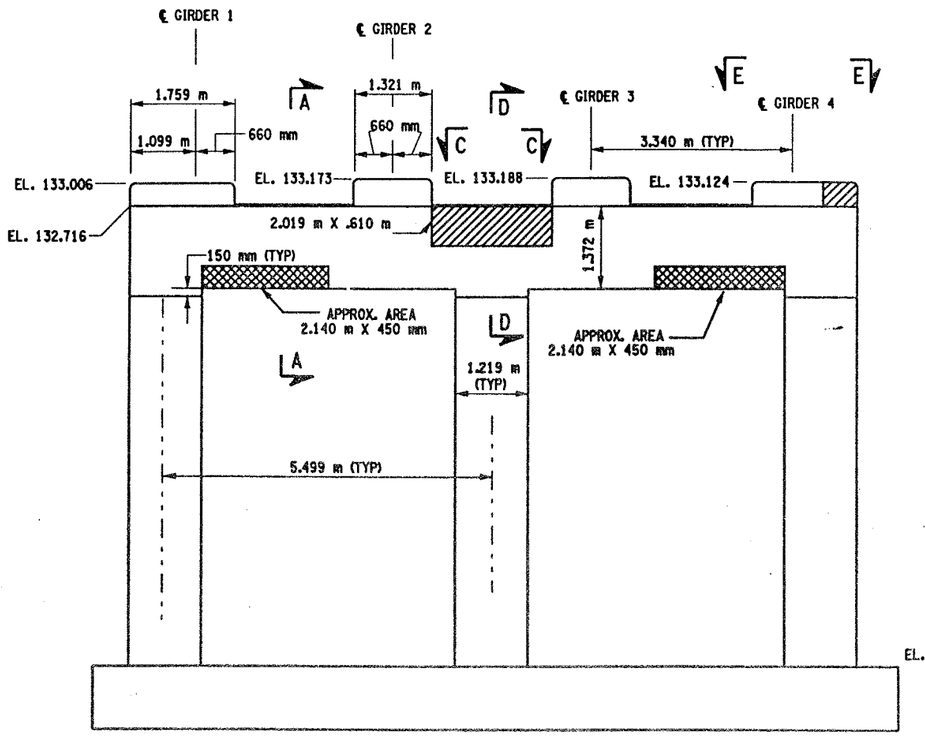

PIER 1 - FRONT FACE (LOOKING NORTH)
BIN 1093571
SCALE: 1 TO 50

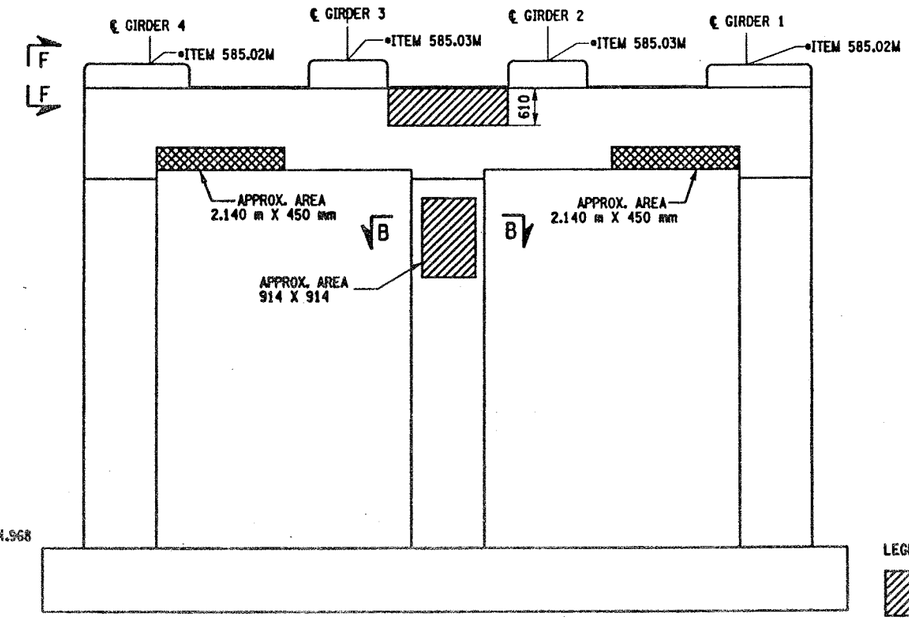

PIER 1- BACK FACE (LOOKING SOUTH)
BIN 1093571
SCALE: 1 TO 50

NOTES:

1. ALL REINFORCEMENT TO REMAIN.
2. RESTORE TO ORIGINAL DIMENSIONS.
3. PEDESTALS NUMERICALLY NUMBERED FROM WEST TO EAST.
4. FOR THE CONCRETE REPAIR AREAS, THE CONCRETE SHALL BE REMOVED TO AT LEAST 40mm MIN. BEYOND THE ENCOUNTERED REINFORCEMENT AND TO SOUND CONCRETE, A.O.B.E.
5. ELEVATIONS SHOWN ARE FROM ORIGINAL CONTRACT PLANS F.I.S.H. 70-7 AND ARE FOR REFERENCE ONLY.
6. REMOVAL DIMENSIONS SHOWN ON PLANS ARE ESTIMATED AND SHALL BE FIELD VERIFIED BY THE CONTRACTOR PRIOR TO BEGINNING OF REMOVAL OPERATIONS A.O.B.E.
7. PERFORM BEARING RESTORATION TO ALL EXPANSION BEARINGS (TO INCLUDE RESETTING OF UNDEREXTENDED OR OVEREXTENDED BEARINGS). SEE DWG. BR-10 & BR-11 FOR BEARING RESTORATION DETAILS.
8. SEE DWG. PR17-2S FOR SECTIONS A-A, B-B, D-D, E-E AND F-F.
9. ALL CONCRETE REMOVAL SHALL BE SAWCUT TO PRODUCE NEAT REMOVAL LINES. COST TO BE INCLUDED IN THE PRICE BID FOR ITEM 582.05M AND ITEM 582.07M.
10. CONTRACTOR SHALL REMOVE DEBRIS FROM TOP OF PEDESTALS AND TOP OF CAP BEAM. COST TO BE INCLUDED IN THE PRICE BID FOR VARIOUS OTHER ITEMS OF CONTRACT.

LEGEND:

ITEM 582.05M - REMOVAL OF STRUCTURAL CONCRETE- REPLACE WITH CLASS A CONCRETE. (CM)

ITEM 582.07M - REMOVAL OF STRUCTURAL CONCRETE - REPLACE WITH VERTICAL OVER-HEAD PATCH MATERIAL. (SM)

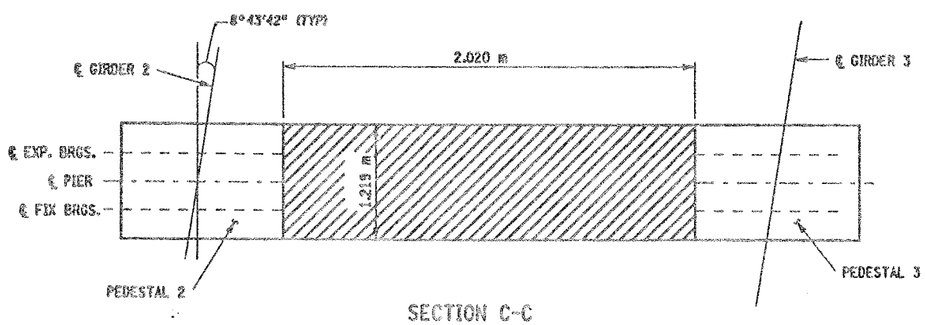

SECTION C-C
NOT TO SCALE

JACKING NOTES:

THE METHOD OF LIFTING SHALL BE APPROVED BY THE DEPUTY CHEIF ENGINEER (STRUCTURES), DSES, TWO WEEKS PRIOR TO THE START OF THE WORK.

NO LIFTING WILL BE ALLOWED UNTIL ALL TEMPORARY SUPPORTS ARE SECURED.

WHEN POSSIBLE, THERE WILL BE NO LIVE LOAD DURING LIFTING.

LIFTING SHALL BE CONFINED TO ONE END OF A SPAN AT ANY ONE TIME.

IF THE CONTRACTOR ELECTS TO LIFT ONLY ONE GIRDER AT A TIME PER PIER (TO A MAXIMUM OF 3 mm TO REMOVE LOAD FROM BEARING), NO VEHICULAR TRAFFIC RESTRICTIONS WILL BE REQUIRED AS STATED IN THE SPECIFICATION SECTION 585-STRUCTURAL LIFTING OPERATIONS.

WHERE THE CONTRACTOR IS REQUIRED TO PERFORM BEARING RESTORATION (SEE BR-11) AS WELL AS CONCRETE REPAIRS REQUIRING STRUCTURAL LIFTING, ONLY ONE STRUCTURAL LIFTING PAYMENT WILL BE MADE.

• PERFORM STRUCTURAL LIFTING UNDER ITEM 585.02M - STRUCTURAL LIFTING OPERATIONS - TYPE B (LIFTING AT A PIER) OR ITEM 585.03M - STRUCTURAL LIFTING OPERATIONS - TYPE C (LIFTING AT A PIER WHERE THE CONTRACTOR SHALL BE REQUIRED TO LIFT OFF THE FOOTING AND/OR GROUND LEVEL.

JACKING LOADS:

D.L. = 75 MT
L.L. = 50 MT
TOTAL = 125 MT

BRIDGE BEARING RESTORATION NOTES:

1. BRIDGE BEARING RESTORATION ITEM 15565.4302M SHALL INCLUDE ALL DESIGNATED WORK AS PER THE SPECIFICATION.
2. STRUCTURAL LIFTING SHALL BE USED WITH ALL EXPANSION BEARING RESTORATION.
3. IF THE CONTRACTOR ELECTS TO LIFT ONLY ONE GIRDER AT A TIME PER SPAN (TO A MAXIMUM OF 3 mm TO REMOVE LOAD FROM BEARINGS), NO VEHICULAR TRAFFIC RESTRICTIONS WILL BE REQUIRED AS STATED IN SPECIFICATIONS SECTON 585-STRUCTURAL LIFTING OPERATIONS.
4. BEARING RESTORATION SHALL AS A MINIMUM, AND IN ALL CASES INCLUDE REPLACEMENT OF BRONZE PLATE.
5. FIXED BEARING TO BE CLEANED IN PLACE. DO NOT DISASSEMBLE.

LIST OF ITEMS USED:

ITEM 15565.4302M	- BRIDGE BEARING RESTORATION (EA)
ITEM 582.05M	- REMOVAL OF STRUCTURAL CONCRETE - REPLACE WITH CLASS A CONCRETE (CM)
ITEM 582.07M	- REMOVAL OF STRUCTURAL CONCRETE - REPLACE WITH VERTICAL OVERHEAD PATCH MATERIAL (SM)
ITEM 585.02M	- STRUCTURAL LIFTING OPERATIONS - TYPE B (EA)
ITEM 585.03M	- STRUCTURAL LIFTING OPERATION - TYPE C (EA)

ALL DIMENSIONS ARE IN mm UNLESS OTHERWISE NOTED

AS BUILT REVISIONS

SIGNATURE DATE

INTERSTATE 481 SB
OVER
CSX RAILROAD YARD
PIER 1

STATE OF NEW YORK
DEPARTMENT OF TRANSPORTATION

FILENAME	REGION	DATE	DRAWING NO.
305613AE.P1A	3	10/02	PR17-1S

DESIGN SUPERVISOR ____ JOB MANAGER ____ DESIGNED BY ____ CHECKED BY ____ DRAFTED BY ____ ESTIMATED BY ____ CHECKED BY ____

FED ROAD REG. NO.	STATE	CONTRACT NO.	SHEET NO.	TOTAL SHEETS
1	N.Y.	D259214	298	432

BRIDGE REHABILITATION PROJECT (ELEMENT SPECIFIC)

VARIOUS BRIDGES ON INTERSTATE 481

TOWNS OF DEWITT AND CICERO

ONONDAGA COUNTY

P.I.N. 305613 | B.I.N. 1093571

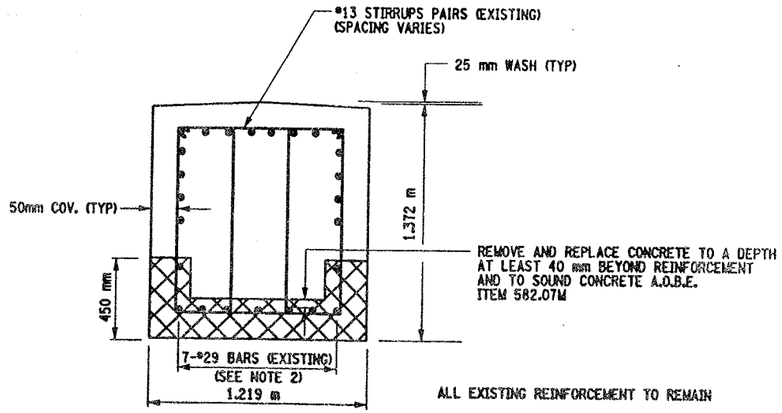

SECTION A-A

NOT TO SCALE

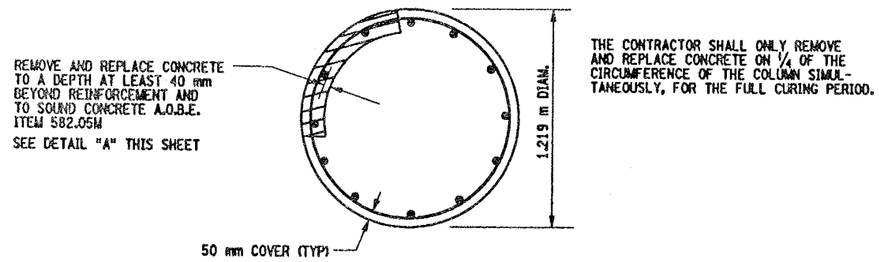

THE CONTRACTOR SHALL ONLY REMOVE AND REPLACE CONCRETE ON 1/4 OF THE CIRCUMFERENCE OF THE COLUMN SIMULTANEOUSLY, FOR THE FULL CURING PERIOD.

SECTION B-B

NOT TO SCALE

NOTES:

1. ALL CONCRETE REMOVAL OPERATIONS SHALL INCLUDE SAW CUTTING TO PRODUCE NEAT REMOVAL LINES. COST TO BE INCLUDED IN PRICE BID FOR THE APPROPRIATE REMOVAL ITEM.
2. THE REINFORCEMENT SHOWN IS TYPICAL FOR PIER #1. THE NUMBER AND OR SIZE OF REINFORCEMENT IN OTHER PIERS MAY VARY.
3. CONTRACTOR SHALL REMOVE DEBRIS FROM TOP OF PEDESTALS AND TOP OF CAP BEAM. COST TO BE INCLUDED IN THE PRICE BID FOR VARIOUS OTHER ITEMS OF CONTRACT.
4. CONTRACTOR SHALL REMOVE DEBRIS FROM TOP OF PEDESTALS AND TOP OF CAP BEAM. COST TO BE INCLUDED IN THE PRICE BID FOR VARIOUS OTHER ITEMS OF CONTRACT.

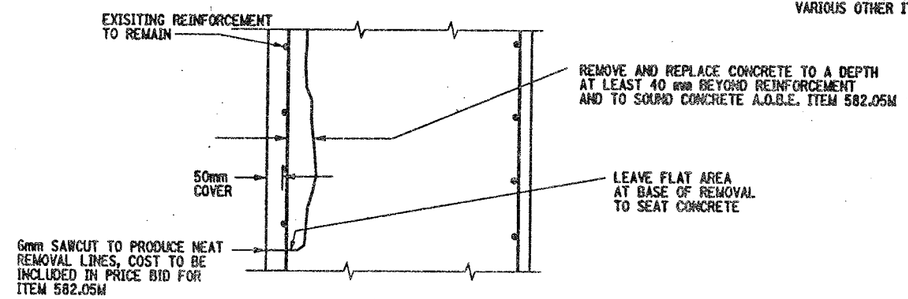

DETAIL "A"

NOT TO SCALE

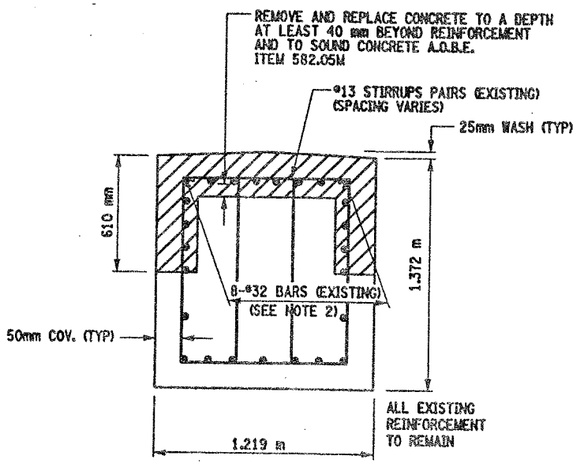

SECTION D-D

NOT TO SCALE

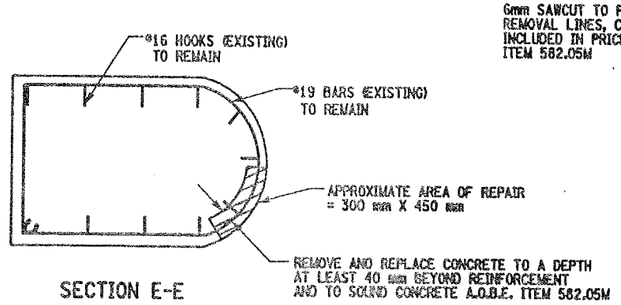

SECTION E-E

NOT TO SCALE

LEGEND:

ITEM 582.05M - REMOVAL OF STRUCTURAL CONCRETE- REPLACE WITH CLASS A CONCRETE. (CM)

ITEM 582.07M - REMOVAL OF STRUCTURAL CONCRETE - REPLACE WITH VERTICAL OVERHEAD PATCH MATERIAL. (SM)

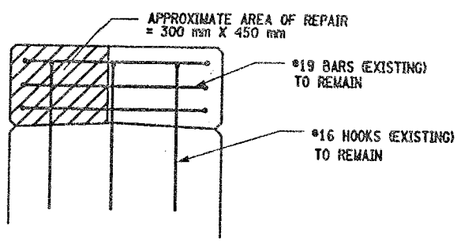

SECTION F-F

NOT TO SCALE

LIST OF ITEMS USED:

ITEM 582.05M - REM. OF STRUC. CONC. - REPLACE WITH CLASS A CONCRETE (CM)
ITEM 582.07M - REM. OF STRUC. CONC. - REPL. W/ VERT. OVERHEAD PATCH MAT'L (SM)

ALL DIMENSIONS ARE IN mm UNLESS OTHERWISE NOTED

AS BUILT REVISIONS

SIGNATURE | DATE

INTERSTATE 481 SB
OVER
CSX RAILROAD YARD
PIER 1

STATE OF NEW YORK
DEPARTMENT OF TRANSPORTATION

FILENAME	REGION	DATE	DRAWING NO.
305613AE.P1A	3	10/02	PR17-2S

DESIGN SUPERVISOR ____ JOB MANAGER ____ DESIGNED BY ____ CHECKED BY ____ DRAFTED BY ____ CHECKED BY ____ ESTIMATED BY ____

FED ROAD REG. NO.	STATE	CONTRACT NO.	SHEET NO.	TOTAL SHEETS
1	N.Y.	D259214	299	432

BRIDGE REHABILITATION PROJECT (ELEMENT SPECIFIC)
VARIOUS BRIDGES ON INTERSTATE 481
TOWNS OF DEWITT AND CICERO
ONONDAGA COUNTY
P.I.N. 305613 B.I.N. 1093571

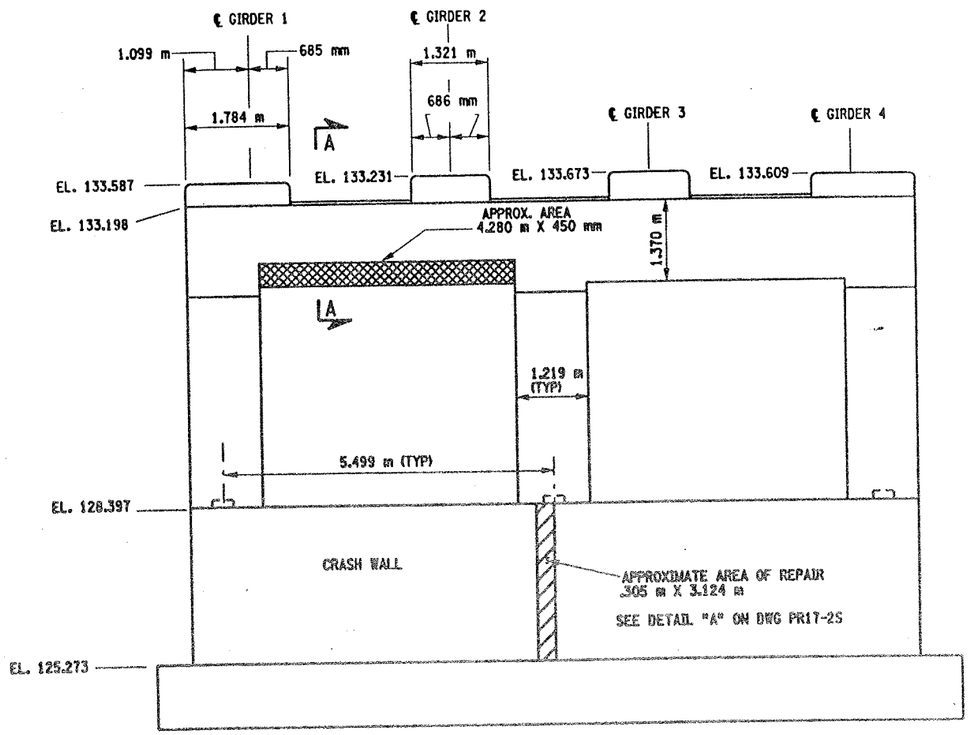

PIER 2 - FRONT FACE (LOOKING NORTH)
BIN 1093571
SCALE: 1 TO 50

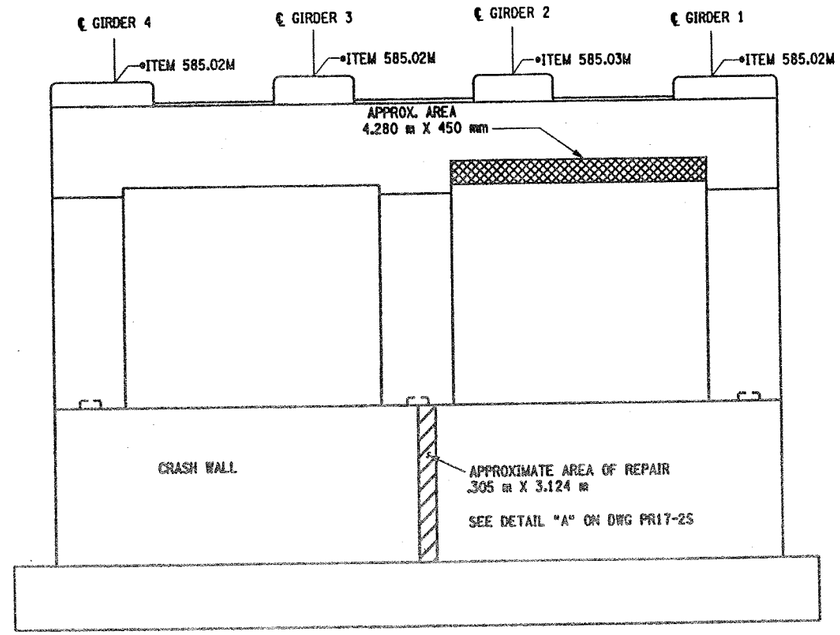

PIER 2- BACK FACE (LOOKING SOUTH)
BIN 1093571
SCALE: 1 TO 50

NOTES:

1. ALL REINFORCEMENT TO REMAIN.
2. RESTORE TO ORIGINAL DIMENSIONS.
3. PEDESTALS NUMERICALLY NUMBERED FROM WEST TO EAST.
4. FOR THE CONCRETE REPAIR AREAS, THE CONCRETE SHALL BE REMOVED TO AT LEAST 40mm MIN. BEYOND THE ENCOUNTERED REINFORCEMENT AND TO SOUND CONCRETE, A.O.B.E.
5. ELEVATIONS SHOWN ARE FROM ORIGINAL CONTRACT PLANS F.I.S.H. 70-7 AND ARE FOR REFERENCE ONLY.
6. REMOVAL DIMENSIONS SHOWN ON PLANS ARE ESTIMATED AND SHALL BE FIELD VERIFIED BY THE CONTRACTOR PRIOR TO BEGINNING OF REMOVAL OPERATIONS A.O.B.E.
7. PERFORM BEARING RESTORATION TO ALL EXPANSION BEARINGS (TO INCLUDE RESETTING OF UNDEREXTENDED OR OVEREXTENDED BEARINGS), SEE DWG. BR-10 & BR-11 FOR BEARING RESTORATION DETAILS. SEE DWG. PR17-1S FOR BEARING RESTORATION NOTES.
8. SEE DWG. PR17-2S FOR SECTION A-A AND DETAIL "A".
9. ALL CONCRETE REMOVAL SHALL BE SAWCUT TO PRODUCE NEAT REMOVAL LINES. COST TO BE INCLUDED IN THE PRICE BID FOR ITEM 582.05M AND ITEM 582.07M.
10. FOR JACKING NOTES SEE DWG. PR17-1S
11. CONTRACTOR WHALL REMOVE DEBRIS FROM TOP OF PEDESTALS AND TOP OF CAP BEAM. COST TO BE INCLUDED IN THE PRICE BE FOR VARIOUS OTHER ITEMS OF CONTRACT.

• PERFORM STRUCTURAL LIFTING UNDER ITEM 585.02M - STRUCTURAL LIFTING OPERATIONS - TYPE B (LIFTING AT A PIER) OR ITEM 585.03M - STRUCTURAL LIFTING OPERATIONS - TYPE C (LIFTING AT A PIER WHERE THE CONTRACTOR SHALL BE REQUIRED TO LIFT OFF THE FOOTING AND/OR GROUND LEVEL.

JACKING LOADS:

D.L. = 75 MT
L.L. = 50 MT
TOTAL = 125 MT

LEGEND:

ITEM 582.05M - REMOVAL OF STRUCTURAL CONCRETE- REPLACE WITH CLASS A CONCRETE (CM)

ITEM 582.07M - REMOVAL OF STRUCTURAL CONCRETE - REPLACE WITH VERTICAL OVER-HEAD PATCH MATERIAL. (SM)

LIST OF ITEMS USED

ITEM 15565.4302M - BRIDGE BEARING RESTORATION (EA)
ITEM 582.05M - REM. OF STRUC. CONC. - REPLACE WITH CLASS A CONCRETE (CM)
ITEM 582.07M - REM. OF STRUC. CONC. - REPL. W/ VERT. OVERHEAD PATCH MAT'L (SM)
ITEM 585.02M - STRUCTURAL LIFTING OPERATIONS - TYPE B (EA)
ITEM 585.03M - STRUCTURAL LIFTING OPERATION - TYPE C (EA)

ALL DIMENSIONS ARE IN mm UNLESS OTHERWISE NOTED

AS BUILT REVISIONS

SIGNATURE DATE

INTERSTATE 481 SB
OVER
CSX RAILROAD YARD
PIER 2

STATE OF NEW YORK
DEPARTMENT OF TRANSPORTATION

FILENAME	REGION	DATE	DRAWING NO.
305613AEJP2A	3	10/02	PR17-3S

DESIGN SUPERVISOR ____ JOB MANAGER ____ DESIGNED BY ____ CHECKED BY ____ ESTIMATED BY ____ DRAFTED BY ____ CHECKED BY ____

FED ROAD REG. NO.	STATE	CONTRACT NO.	SHEET NO.	TOTAL SHEETS
1	N.Y.	D259214	300	432

BRIDGE REHABILITATION PROJECT (ELEMENT SPECIFIC)
VARIOUS BRIDGES ON INTERSTATE 481
TOWNS OF DEWITT AND CICERO
ONONDAGA COUNTY
P.I.N. 305613 | B.I.N. 1093571

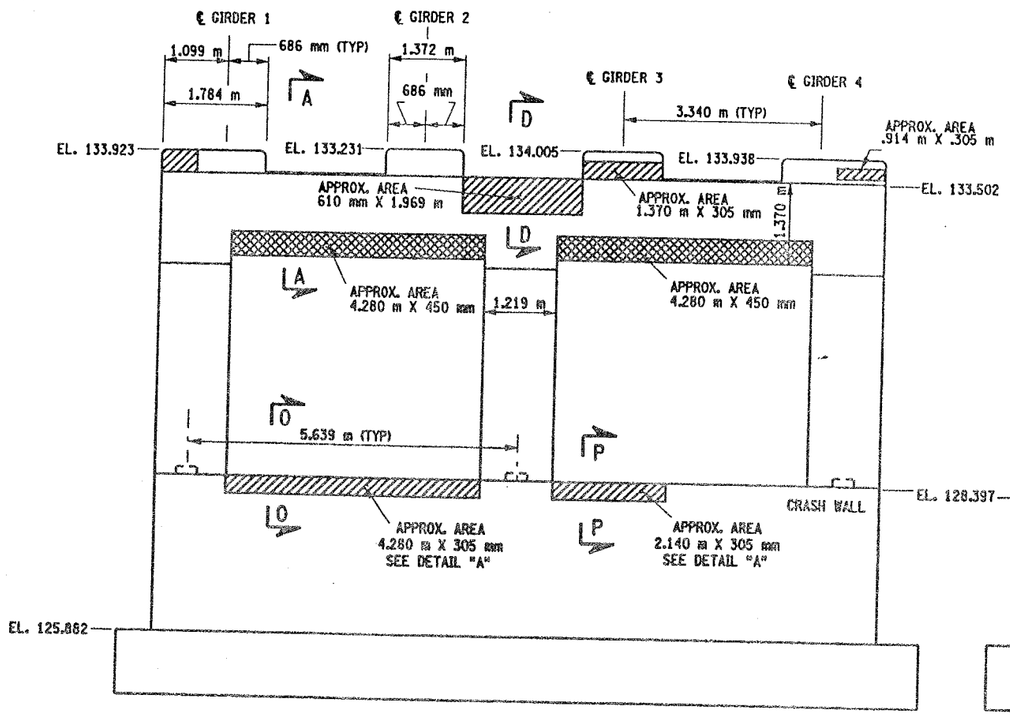

PIER 3 - FRONT FACE (LOOKING NORTH)

BIN 1093571

SCALE: 1 TO 50

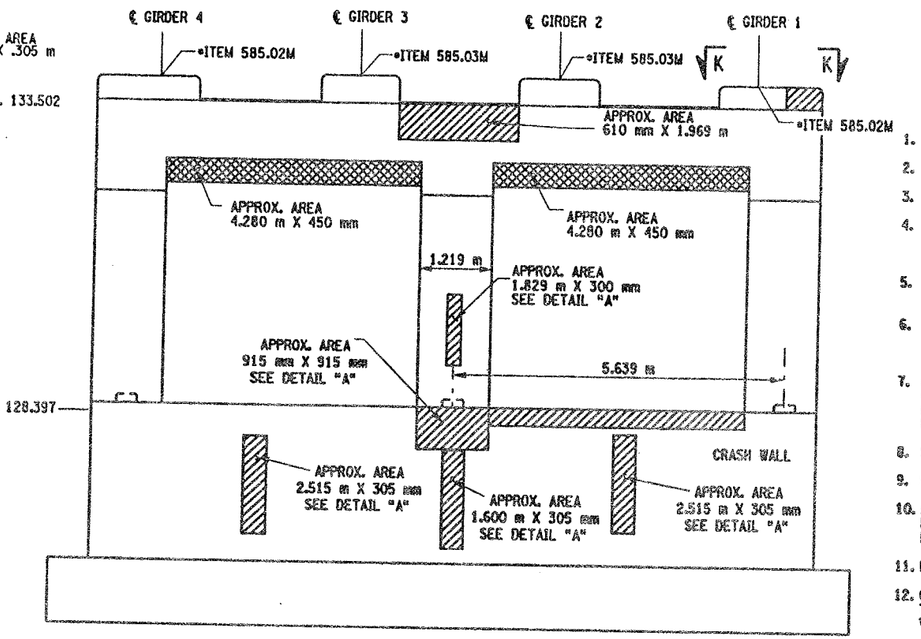

PIER 3 - BACK FACE (LOOKING SOUTH)

BIN 1093571

SCALE: 1 TO 50

NOTES:

1. ALL REINFORCEMENT TO REMAIN.
2. RESTORE TO ORIGINAL DIMENSIONS.
3. PEDESTALS NUMERICALLY NUMBERED FROM WEST TO EAST.
4. FOR THE CONCRETE REPAIR AREAS, THE CONCRETE SHALL BE REMOVED TO AT LEAST 40mm MIN. BEYOND THE ENCOUNTERED REINFORCEMENT AND TO SOUND CONCRETE, A.O.B.E.
5. ELEVATIONS SHOWN ARE FROM ORIGINAL CONTRACT PLANS F.I.S.H. 70-7 AND ARE FOR REFERENCE ONLY.
6. REMOVAL DIMENSIONS SHOWN ON PLANS ARE ESTIMATED AND SHALL BE FIELD VERIFIED BY THE CONTRACTOR PRIOR TO BEGINNING OF REMOVAL OPERATIONS A.O.B.E.
7. PERFORM BEARING RESTORATION TO ALL EXPANSION BEARINGS (TO INCLUDE RESETTING OF UNDEREXTENDED OR OVEREXTENDED BEARINGS). SEE DWG BR-10 & BR-11 FOR BEARING RESTORATION DETAILS. SEE DWG. PR17-1S FOR BEARING RESTORATION NOTES.
8. SEE DWG. PR17-2S FOR SECTIONS A-A, D-D AND DETAIL "A".
9. SEE DWG. PR17-2N FOR SECTION K-K.
10. ALL CONCRETE REMOVAL SHALL BE SAWCUT TO PRODUCE NEAT REMOVAL LINES. COST TO BE INCLUDED IN THE PRICE BID FOR ITEM 582.05M AND ITEM 582.07M.
11. FOR JACKING NOTES SEE DWG. PR17-1S.
12. CONTRACTOR SHALL REMOVE DEBRIS FROM TOP OF PEDISTALS AND TOP OF CAPBEAM. COST TO BE INCLUDED IN THE PRICE BID FOR VARIOUS OTHER ITEMS OF CONTRACT.

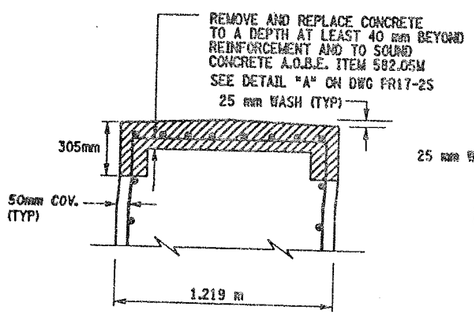

ALL EXISTING REINFORCEMENT TO REMAIN

SECTION O-O

NOT TO SCALE

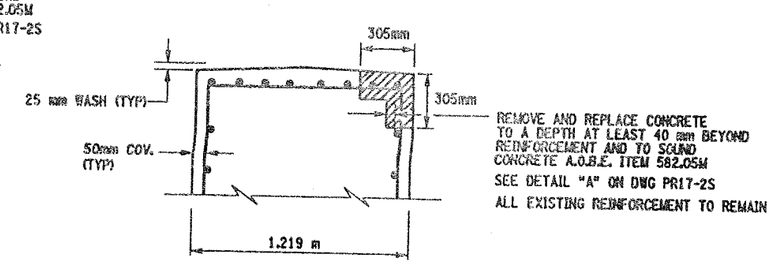

SECTION P-P

NOT TO SCALE

• PERFORM STRUCTURAL LIFTING UNDER ITEM 585.02M - STRUCTURAL LIFTING OPERATIONS - TYPE B (LIFTING AT A PIER) OR ITEM 585.03M - STRUCTURAL LIFTING OPERATIONS - TYPE C (LIFTING AT A PIER WHERE THE CONTRACTOR SHALL BE REQUIRED TO LIFT OFF THE FOOTING AND/OR GROUND LEVEL.

JACKING LOADS:

D.L. = 100 MT
L.L. = 50 MT
TOTAL = 150 MT

LEGEND:

ITEM 582.05M - REMOVAL OF STRUCTURAL CONCRETE- REPLACE WITH CLASS A CONCRETE (CM)

ITEM 582.07M - REMOVAL OF STRUCTURAL CONCRETE - REPLACE WITH VERTICAL OVERHEAD PATCH MATERIAL. (SM)

LIST OF ITEMS USED:

ITEM 15565.4302M - BRIDGE BEARING RESTORATION (EA)
ITEM 582.05M - REM. OF STRUC. CONC. - REPLACE WITH CLASS A CONCRETE (CM)
ITEM 582.07M - REM. OF STRUC. CONC. - REPL. W/ VERT. OVERHEAD PATCH MAT'L (SM)
ITEM 585.02M - STRUCTURAL LIFTING OPERATIONS - TYPE B (EA)
ITEM 585.03M - STRUCTURAL LIFTING OPERATION - TYPE C (EA)

ALL DIMENSIONS ARE IN mm UNLESS OTHERWISE NOTED

AS BUILT REVISIONS

SIGNATURE | DATE

INTERSTATE 481 SB
OVER
CSX RAIROAD YARD
PIER 3

STATE OF NEW YORK
DEPARTMENT OF TRANSPORTATION

FILENAME	REGION	DATE	DRAWING NO.
305613AE.P3A	3	10/02	PR17-4S

DESIGN SUPERVISOR ____ JOB MANAGER ____ DESIGNED BY ____ CHECKED BY ____ ESTIMATED BY ____ DRAFTED BY ____ CHECKED BY ____

FED ROAD REG. NO.	STATE	CONTRACT NO.	SHEET NO.	TOTAL SHEETS
1	N.Y.	D259214	301	432

BRIDGE REHABILITATION PROJECT (ELEMENT SPECIFIC)
VARIOUS BRIDGES ON INTERSTATE 481
TOWNS OF DEWITT AND CICERO
ONONDAGA COUNTY
P.I.N. 305613 B.I.N. 1093571

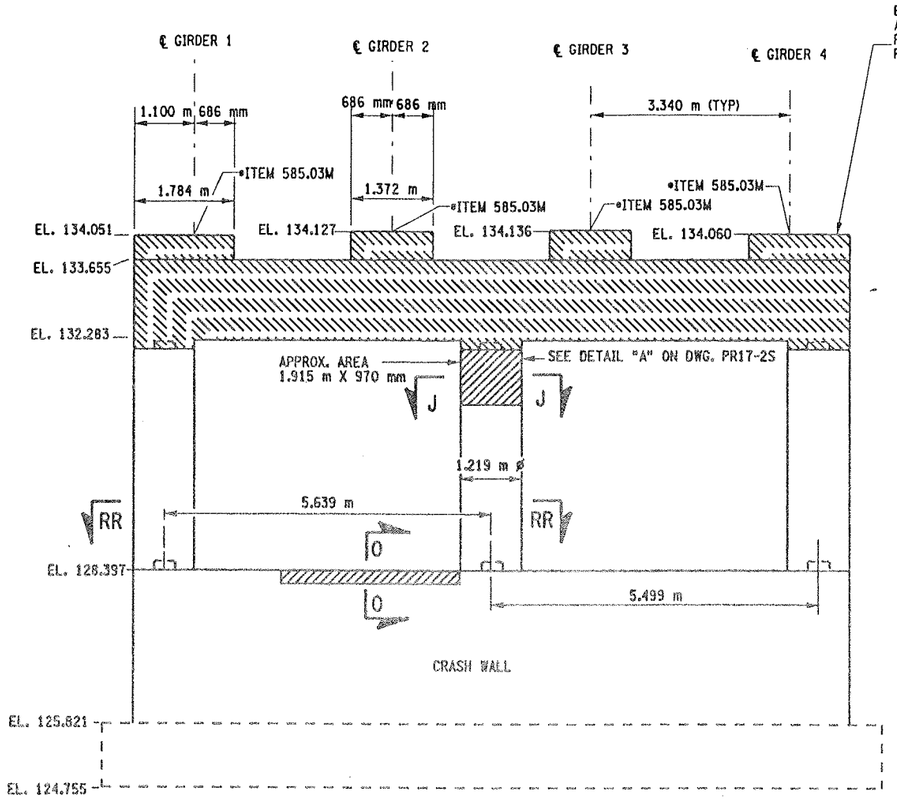

PIER 4 - FRONT FACE (LOOKING NORTH)
BIN 1093571 REMOVAL
SCALE: 1 TO 50

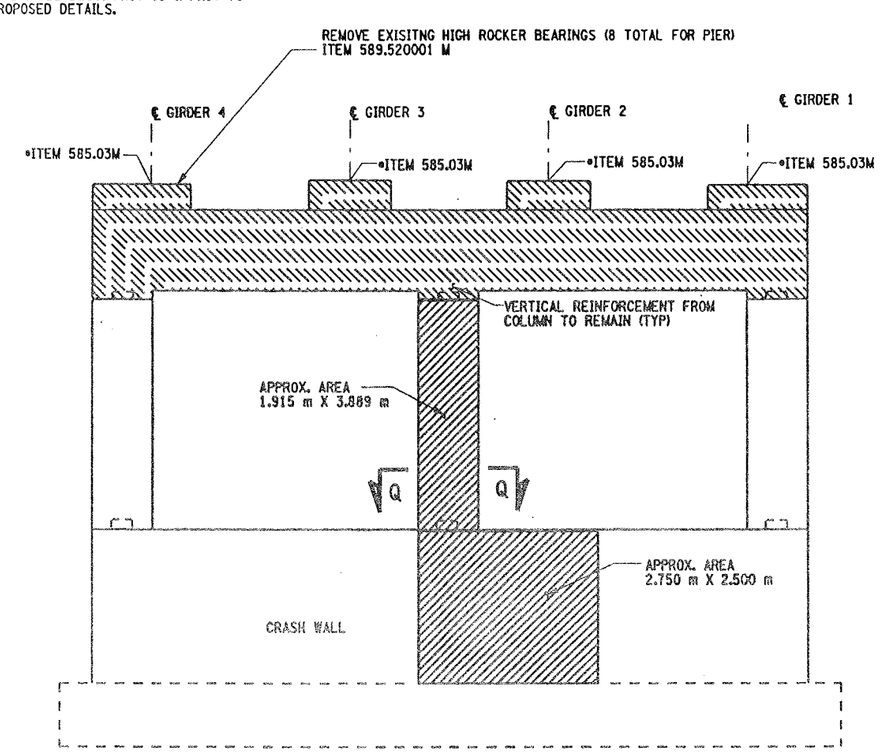

PIER 4 - BACKFACE (LOOKING SOUTH)
BIN 1093571 REMOVAL
SCALE: 1 TO 50

NOTES:

1. ALL REINFORCEMENT TO REMAIN, (EXCEPT PEDESTAL REINFORCEMENT AND CAPBEAM REINFORCEMENT). THE VERTICAL REINFORCEMENT IN THE CAPBEAMS-ORIGINATING FROM THE COLUMNS SHALL REMAIN.
2. PEDESTALS NUMERICALLY NUMBERED FROM WEST TO EAST.
3. FOR THE CONCRETE REPAIR AREAS, THE CONCRETE SHALL BE REMOVED TO AT LEAST 40mm MIN. BEYOND THE ENCOUNTERED REINFORCEMENT AND TO SOUND CONCRETE, A.O.B.E.
4. ELEVATIONS SHOWN ARE FROM ORIGINAL CONTRACT PLANS F.I.S.H. 70-7 AND ARE FOR REFERENCE ONLY.
5. REMOVAL DIMENSIONS SHOWN ON PLANS ARE ESTIMATED AND SHALL BE FIELD VERIFIED BY THE CONTRACTOR AND ENGINEER PRIOR TO BEGINNING OF REMOVAL OPERATIONS A.O.B.E.
6. SEE DWG. PR17-4N FOR SECTION Q-Q.
7. SEE DWG. PR17-2N FOR SECTION J-J.
8. SEE DWG. PR17-4S FOR SECTION O-O.
9. ALL CONCRETE REMOVAL SHALL BE SAWCUT TO PRODUCE NEAT REMOVAL LINES. COST TO BE INCLUDED IN THE PRICE BID FOR ITEM 582.05M AND ITEM 582.07M.
10. FOR JACKING NOTES SEE DWG. PR17-1S
11. CONTRACTOR SHALL REMOVE DEBRIS FROM TOP OF PEDESTALS AND TOP OF CAP BEAM. COST TO BE INCLUDED IN THE PRICE BID FOR VARIOUS OTHER ITEMS OF CONTRACT.
12. SEE BR-1 AND BR-2 FOR BEARING TABLE AND BEARING DETAILS.

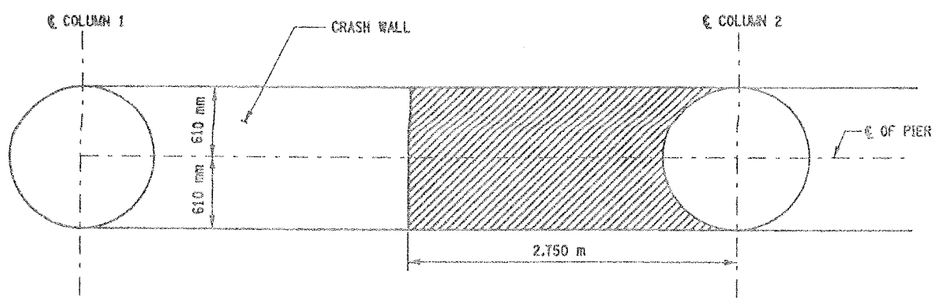

SECTION RR-RR
SCALE 1:25

• PERFORM STRUCTURAL LIFTING UNDER ITEM 585.02M - STRUCTURAL LIFTING OPERATIONS - TYPE B (LIFTING AT A PIER) OR ITEM 585.03M - STRUCTURAL LIFTING OPERATIONS - TYPE C (LIFTING AT A PIER WHERE THE CONTRACTOR SHALL BE REQUIRED TO LIFT OFF THE FOOTING AND/OR GROUND LEVEL.

JACKING LOADS:

D.L. = 100 MT
L.L. = 50 MT
TOTAL = 150 MT

LIST OF ITEMS USED:

ITEM 580.01M - REMOVAL OF STRUCTURAL CONCRETE (CM)
ITEM 582.05M - REM. OF STRUC. CONC. - REPLACE WITH CLASS A CONCRETE (CM)
ITEM 585.03M - STRUCTURAL LIFTING OPERATION - TYPE C (EA)
ITEM 589.520001M - REMOVAL OF EXISTING STEEL (EA)

LEGEND:

REPAIR: ITEM 582.05M - REMOVAL OF STRUCTURAL CONCRETE- REPLACE WITH CLASS A CONCRETE (CM)

REPLACEMENT: ITEM 580.01M - REMOVAL OF STRUCTURAL CONCRETE - (CM) (COMPLETE REMOVAL)

ALL DIMENSIONS ARE IN mm UNLESS OTHERWISE NOTED

AS BUILT REVISIONS

SIGNATURE DATE

INTERSTATE 481 SB
OVER
CSX RAILROAD YARD
PIER 4
REMOVAL DETAILS

STATE OF NEW YORK
DEPARTMENT OF TRANSPORTATION

FILENAME	REGION	DATE	DRAWING NO.
305613AE.P4A	3	10/02	PR17-5S

CHECKED BY
DRAFTED BY
ESTIMATED BY
CHECKED BY
DESIGNED BY
JOB MANAGER
DESIGN SUPERVISOR

FED ROAD REG. NO.	STATE	CONTRACT NO.	SHEET NO.	TOTAL SHEETS
1	N.Y.	D259214	302	432

BRIDGE REHABILITATION PROJECT (ELEMENT SPECIFIC)
VARIOUS BRIDGES ON INTERSTATE 481
TOWNS OF DEWITT AND CICERO
COUNTY OF ONONDAGA
P.I.N. 305613 | B.I.N. 1093571

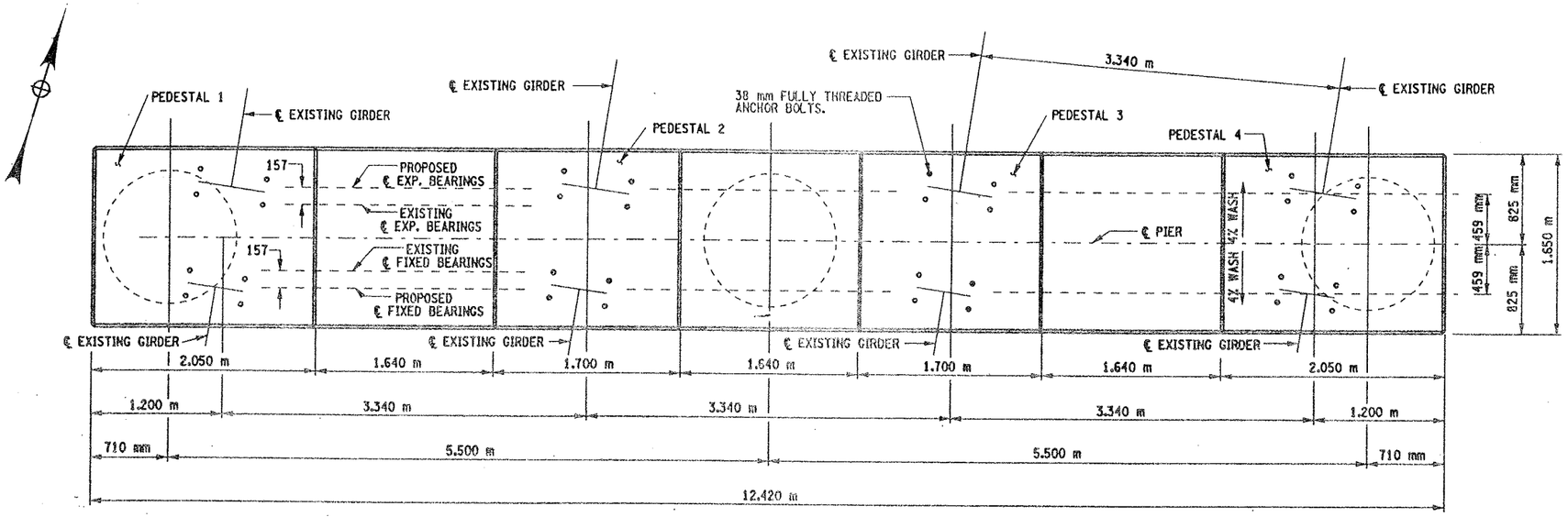

PROPOSED PLAN
SCALE 1:25

NOTES:

1. THESE ELEVATIONS MAY HAVE TO BE ADJUSTED TO ACCOMMODATE THE ACTUAL BEARINGS FURNISHED. IT IS THE RESPONSIBILITY OF THE CONTRACTOR TO COORDINATE ANY CHANGES IN THE BEARINGS WHICH MAY AFFECT THE PEDESTAL ELEVATIONS OR DIMENSIONS.
2. SEE DWG PR17-7S FOR ANCHOR BOLT LAYOUT, PEDESTAL REINFORCEMENT DETAILS, SECTION QQ-QQ, AND CHAMFER DETAIL.
3. SEE DWG. NO. BL-6 FOR BAR LIST AND BAR BENDING DIAGRAMS.
4. SEE BR-1 AND BR-2 FOR BEARING DETAILS.
5. REINF. BAR LAPS, IF REQUIRED SHALL BE STAGGERED SO NO MORE THAN 50% OF THE BARS ARE LAPPED AT ANY ONE LOCATION.

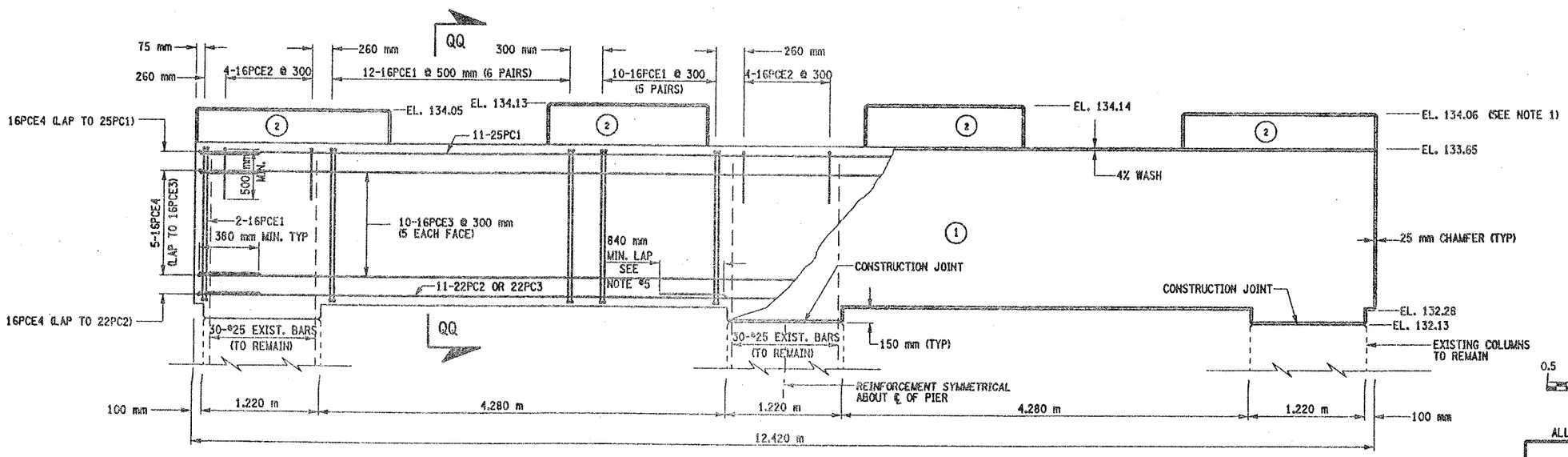

(NO.) INDICATES CONCRETE PLACEMENT NUMBER

PROPOSED ELEVATION
SCALE 1:25

0.5 0 0.5 1 1.5 2 2.5 m
SCALE

ALL DIMENSIONS ARE IN mm UNLESS OTHERWISE NOTED

AS BUILT REVISIONS

SIGNATURE DATE

INTERSTATE 481 SB
OVER
CSX RAILROAD YARD
PIER 4

STATE OF NEW YORK
DEPARTMENT OF TRANSPORTATION

FILENAME	REGION	DATE	DRAWING NO.
305613AE.P4A	3	10/02	PR17-6S

CONCRETE TABLE (m^3)

PLACEMENT	QUANTITY	ITEM NO.
1	5.46	555.09M
2	28.60	555.09M

LIST OF ITEMS USED:

ITEM 555.09M - CONCRETE FOR STRUCTURES, CLASS HP (CM)
ITEM 556.0201M - UNCOATED BAR REINFORCEMENT FOR CONCRETE STRUC. (KG)
ITEM 556.0202M - EPOXY-COATED BAR REINFORCEMENT FOR STRUC. (KG)

DESIGN SUPERVISOR ___ JOB MANAGER ___ ESTIMATED BY ___ DESIGNED BY ___ CHECKED BY ___ DRAFTED BY ___ CHECKED BY ___

FED ROAD REG. NO.	STATE	CONTRACT NO.	SHEET NO.	TOTAL SHEETS
1	N.Y.	D259214	303	432

BRIDGE REHABILITATION PROJECT (ELEMENT SPECIFIC)
VARIOUS BRIDGES ON INTERSTATE 481
TOWNS OF DEWITT AND CICERO
COUNTY OF ONONDAGA
P.I.N. 305613 B.I.N. 1093571

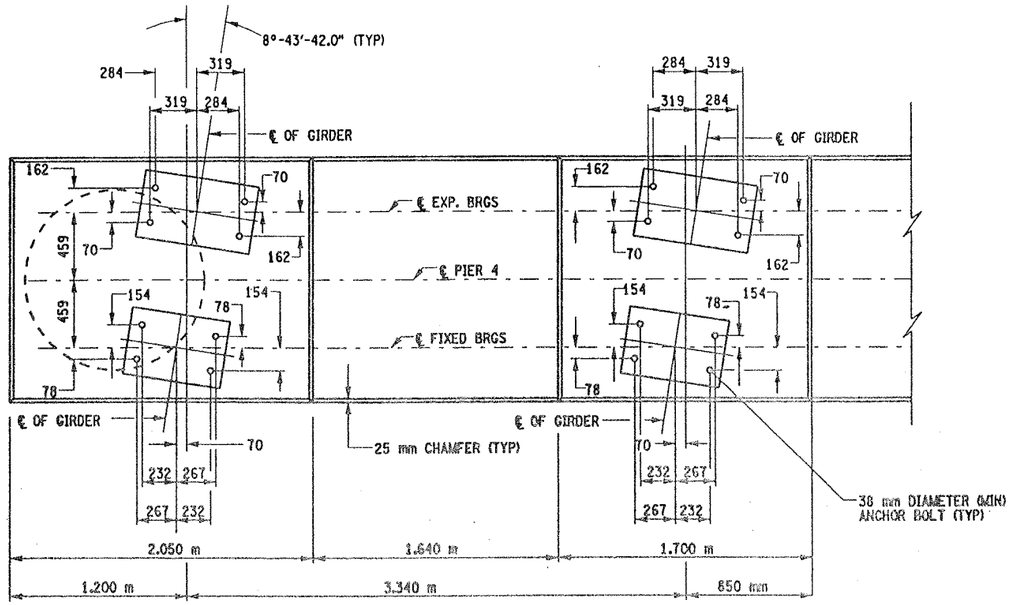

ANCHOR BOLT LAYOUT

SCALE 1:20

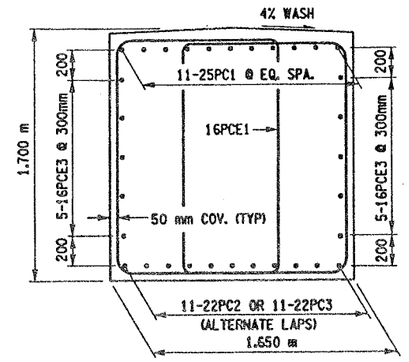

SECTION QQ-QQ

SCALE 1 TO 20

NOTES:

1. SEE DWG. NO. BL-6 FOR BAR LIST AND BAR BENDING DIAGRAM.
2. CONTRACTOR SHALL REMOVE DEBRIS FROM TOP OF PEDESTALS AND TOP OF CAP BEAM. COST TO BE INCLUDED IN THE PRICE BID FOR VARIOUS OTHER ITEMS OF CONTRACT.
3. SEE BR-1 AND BR-2 FOR BEARING DETAILS.
4. SAME BAR MARKS SHALL APPLY FOR BOTH PIERS.

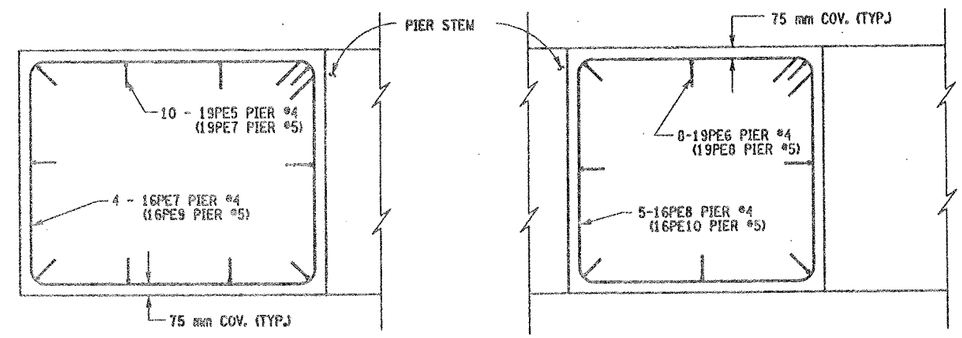

PEDESTALS 1 & 4

PEDESTALS 2 & 3

PEDESTAL REINFORCEMENT (PLAN)

SCALE 1:20

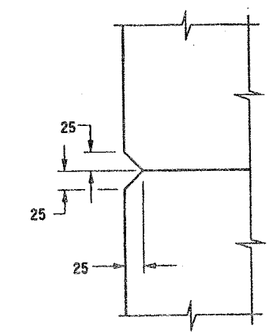

CHAMFER DETAIL

NOT TO SCALE

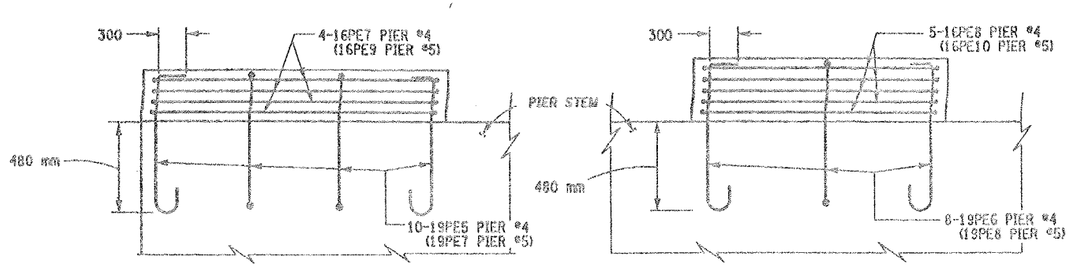

PEDESTALS 1
(PEDESTAL 4 SIMILAR)

PEDESTALS 2 & 3

PEDESTAL REINFORCEMENT (ELEVATION)

SCALE 1:20

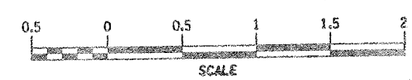

ALL DIMENSIONS ARE IN mm UNLESS OTHERWISE NOTED

LIST OF ITEMS USED:

ITEM 555.09M - CONCRETE FOR STRUCTURES, CLASS HP (CM)
ITEM 555.0201M - UNCOATED BAR REINFORCEMENT FOR CONCRETE STRUC. (KG)
ITEM 555.0202M - EPOXY-COATED BAR REINFORCEMENT FOR STRUC. (KG)
ITEM 580.01M - REMOVAL OF STRUCTURAL CONCRETE (CM)

AS BUILT REVISIONS

SIGNATURE DATE

INTERSTATE 481 SB
OVER
CSX RAILROAD YARD
PIERS 4 & 5

STATE OF NEW YORK
DEPARTMENT OF TRANSPORTATION

FILENAME	REGION	DATE	DRAWING NO.
305613AE.P4A	3	10/02	PR17-7S

CHECKED BY
DRAFTED BY
ESTIMATED BY
CHECKED BY
DESIGNED BY
JOB MANAGER
DESIGN SUPERVISOR

FED ROAD REG. NO.	STATE	CONTRACT NO.	SHEET NO.	TOTAL SHEETS
1	N.Y.	D259214	304	432

BRIDGE REHABILITATION PROJECT (ELEMENT SPECIFIC)
VARIOUS BRIDGES ON INTERSTATE 481
TOWNS OF DEWITT AND CICERO
ONONDAGA COUNTY
P.I.N. 305613 | B.I.N. 1093571

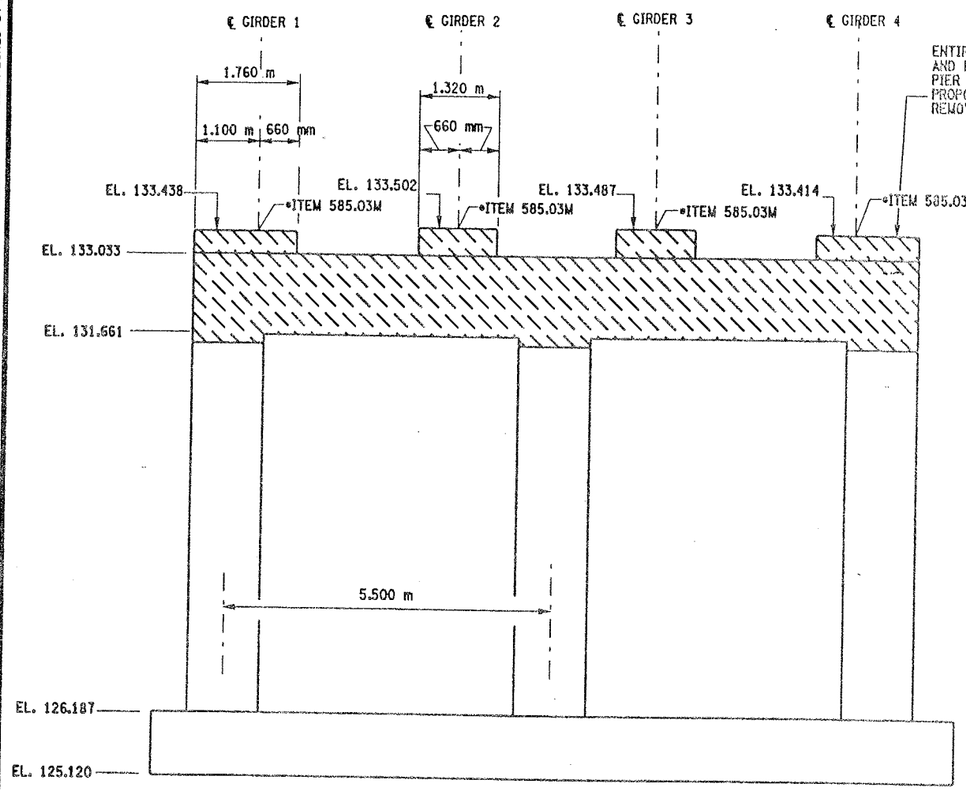

PIER 5 - FRONT FACE (LOOKING NORTH)
BIN 1093571 (REMOVAL)
SCALE: 1 TO 50

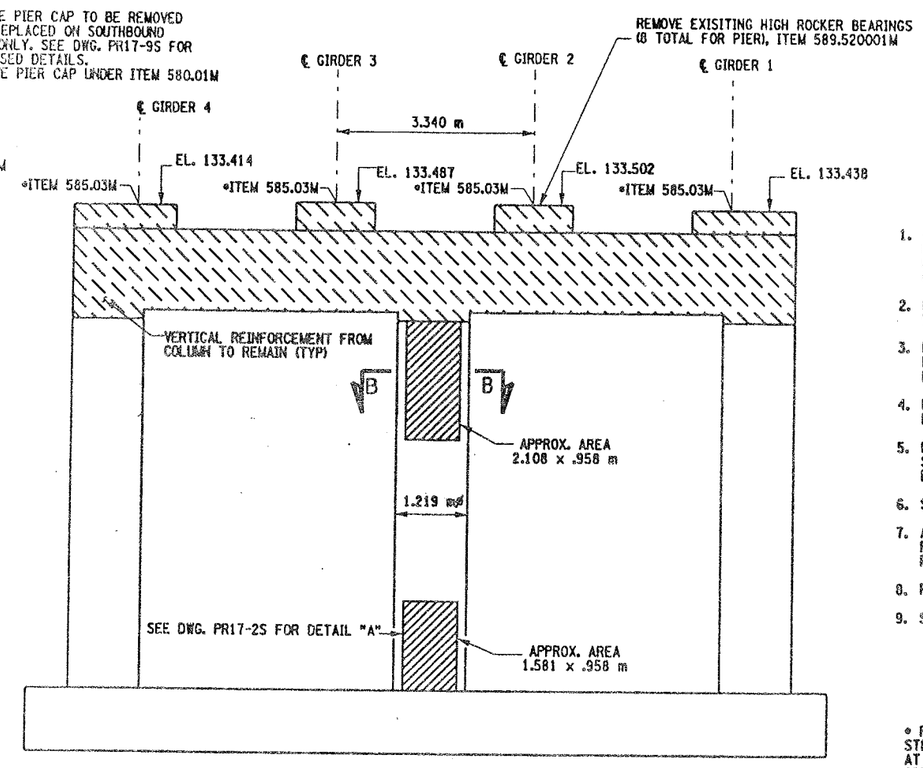

PIER 5 - BACK FACE (LOOKING SOUTH)
BIN 1093571 (REMOVAL)
SCALE: 1 TO 50

NOTES:

1. ALL REINFORCEMENT TO REMAIN, (EXCEPT PEDESTAL REINFORCEMENT AND CAPBEAM REINFORCEMENT). THE VERTICAL REINFORCEMENT IN THE CAPBEAMS-ORIGINATING FROM THE COLUMNS SHALL REMAIN.
2. PEDESTALS NUMERICALLY NUMBERED FROM WEST TO EAST.
3. FOR THE CONCRETE REPAIR AREAS, THE CONCRETE SHALL BE REMOVED TO AT LEAST 40mm MIN. BEYOND THE ENCOUNTERED REINFORCEMENT AND TO SOUND CONCRETE, A.O.B.E.
4. ELEVATIONS SHOWN ARE FROM ORIGINAL CONTRACT PLANS F.I.S.H. 70-7 AND ARE FOR REFERENCE ONLY.
5. REMOVAL DIMENSIONS SHOWN ON PLANS ARE ESTIMATED AND SHALL BE FIELD VERIFIED BY THE CONTRACTOR AND ENGINEER PRIOR TO BEGINNING OF REMOVAL OPERATIONS A.O.B.E.
6. SEE DWG. PR17-2S FOR SECTION B-B AND DETAIL "A".
7. ALL CONCRETE REMOVAL SHALL BE SAWCUT TO PRODUCE NEAT REMOVAL LINES. COST TO BE INCLUDED IN THE PRICE BID FOR ITEM 582.05M AND ITEM 582.07M
8. FOR JACKING LOADS SEE DWG. PR17-1S
9. SEE BR-1 AND BR-2 FOR BEARING TABLE AND BEARING DETAIL

• PERFORM STRUCTURAL LIFTING UNDER ITEM 585.02M - STRUCTURAL LIFTING OPERATIONS - TYPE B (LIFTING AT A PIER) OR ITEM 585.03M - STRUCTURAL LIFTING OPERATIONS - TYPE C (LIFTING AT A PIER WHERE THE CONTRACTOR SHALL BE REQUIRED TO LIFT OFF THE FOOTING AND/OR GROUND LEVEL.

JACKING LOADS:

D.L. = 100 MT
L.L. = 50 MT
TOTAL = 150 MT

LEGEND:

REPAIR: ITEM 582.05M - REMOVAL OF STRUCTURAL CONCRETE- REPLACE WITH CLASS A CONCRETE (CM)

REPLACEMENT: *ITEM 580.01M - REMOVAL OF STRUCTURAL* CONCRETE - (CM) (COMPLETE REMOVAL)

ALL DIMENSIONS ARE IN mm UNLESS OTHERWISE NOTED

LIST OF ITEMS USED:

ITEM 580.01M - REMOVAL OF STRUCTURAL CONCRETE (CM)
ITEM 582.05M - REM. OF STRUC. CONC. - REPLACE WITH CLASS A CONCRETE (CM)
ITEM 585.02M - STRUCTURAL LIFTING OPERATION - TYPE C (EACH)
ITEM 589.520001M - REMOVAL OF EXISITING STEEL (EACH)

AS BUILT REVISIONS

SIGNATURE | DATE

INTERSTATE 481 SB
OVER
CSX RAILROAD YARD
PIER 5

STATE OF NEW YORK
DEPARTMENT OF TRANSPORTATION

FILENAME	REGION	DATE	DRAWING NO.
305613AE.P5A	3	10/02	PR17-8S

DESIGN SUPERVISOR ____ JOB MANAGER ____ DESIGNED BY ____ ESTIMATED BY ____ DRAFTED BY ____ CHECKED BY ____ CHECKED BY ____

FED ROAD REG. NO.	STATE	CONTRACT NO.	SHEET NO.	TOTAL SHEETS
1	N.Y.	D259214	305	432

BRIDGE REHABILITATION PROJECT (ELEMENT SPECIFIC)
VARIOUS BRIDGES ON INTERSTATE 481
TOWNS OF DEWITT AND CICERO
COUNTY OF ONONDAGA
P.I.N. 305613 B.I.N. 1093571

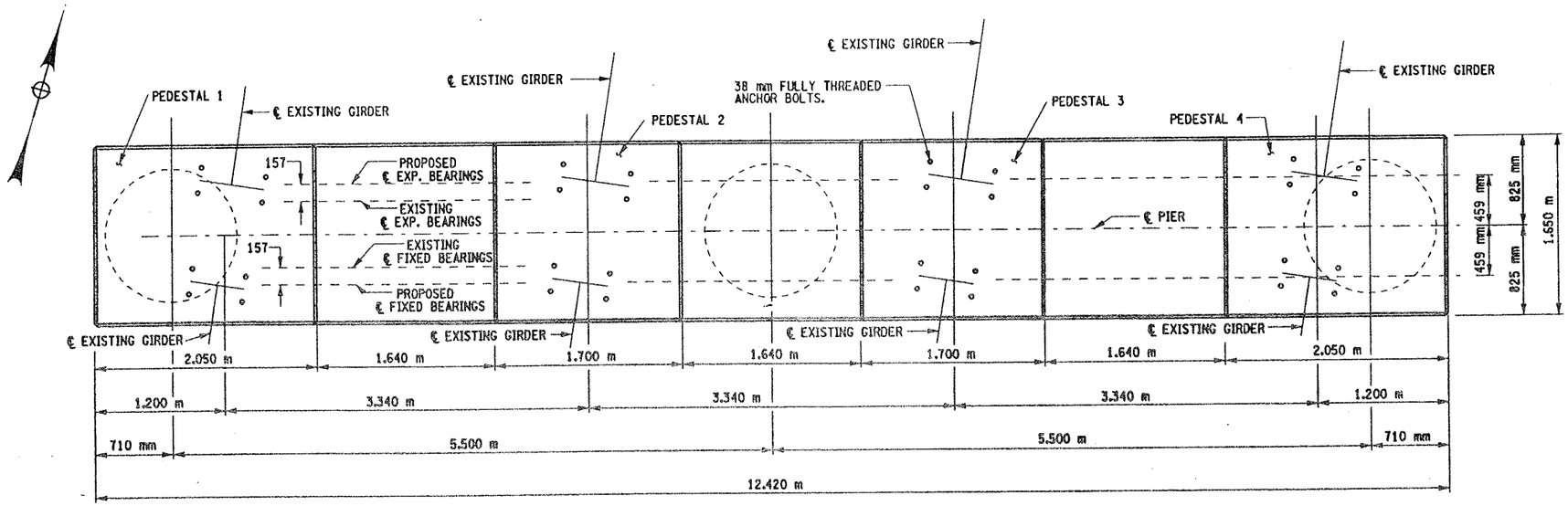

PROPOSED
PLAN
SCALE 1:25

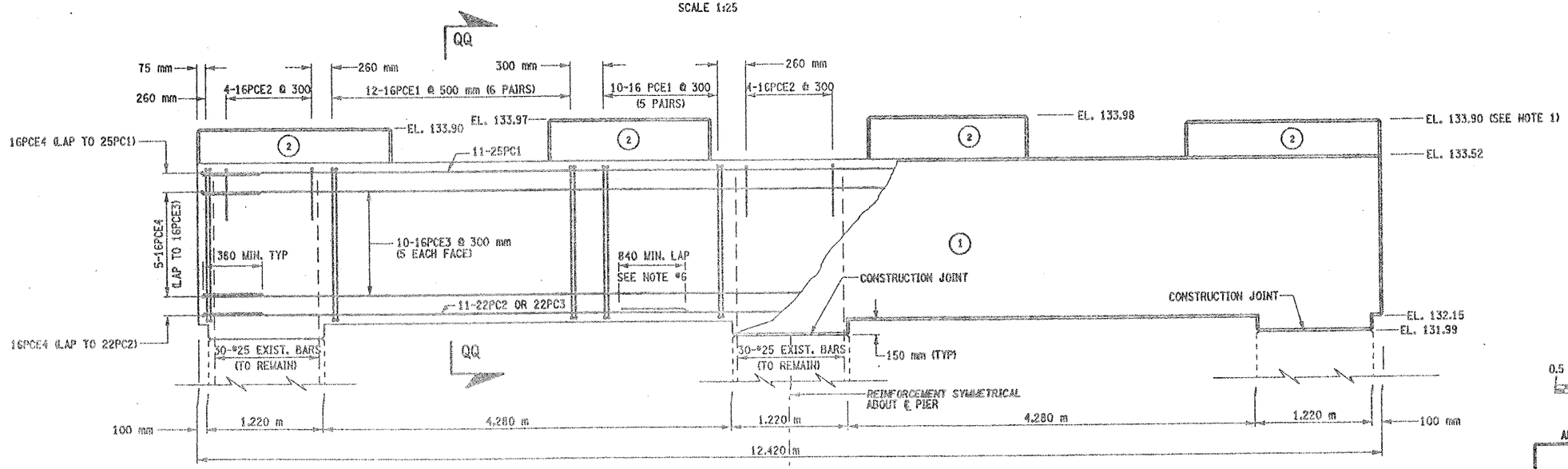

(NO.) INDICATES CONCRETE PLACEMENT NUMBER

PROPOSED
ELEVATION
SCALE 1:25

NOTES:

1. THESE ELEVATIONS MAY HAVE TO BE ADJUSTED TO ACCOMMODATE THE ACTUAL BEARINGS FURNISHED. IT IS THE RESPONSIBILITY OF THE CONTRACTOR TO COORDINATE ANY CHANGES IN THE BEARINGS WHICH MAY AFFECT THE PEDESTAL ELEVATIONS OR DIMENSIONS.
2. SEE DWG. NO. PR17-7S FOR ANCHOR BOLT LAYOUT, PEDESTAL REINFORCEMENT DETAIL AND SECTION Q-Q FOR CHAMFER DETAIL.
3. SEE DWG. NO. BL-6 FOR BARLIST AND BAR BENDING DIAGRAMS.
4. SEE BR-1 AND BR-2 FOR BEARING DETAILS.
5. CONTRACTOR SHALL REMOVE DEBRIS FROM TOP OF PEDESTALS AND TOP OF CAP BEAM. COST TO BE INCLUDED IN THE PRICE BID FOR VARIOUS OTHER ITEMS OF CONTRACT.
6. REINFORCING BAR LAPS, IF REQUIRED, SHALL BE STAGGERED SO THAT NO MORE THAN 50% OF THE BARS ARE LAPPED AT ANY ONE LOCATION.

0.5 0 0.5 1 1.5 2 2.5 m
SCALE

ALL DIMENSIONS ARE IN mm UNLESS OTHERWISE NOTED

AS BUILT REVISIONS

SIGNATURE DATE

INTERSTATE 481 SB
OVER
CSX RAILROAD YARD
PIER 5

STATE OF NEW YORK
DEPARTMENT OF TRANSPORTATION

FILENAME	REGION	DATE	DRAWING NO.
305613AE.P5A	3	10/02	PR17-9S

CONCRETE TABLE (m^3)

PLACEMENT	QUANTITY	ITEM NO.
1	5.12	555.09M
2	28.60	555.09M

LIST OF ITEMS USED:

ITEM 555.09M - CONCRETE FOR STRUCTURES, CLASS HP (CM)
ITEM 556.0201M - UNCOATED BAR REINFORCEMENT FOR CONCRETE STRUC. (KG)
ITEM 556.0202M - EPOXY-COATED BAR REINFORCEMENT FOR STRUC. (KG)

CHECKED BY
DRAFTED BY
ESTIMATED BY
CHECKED BY
DESIGNED BY
JOB MANAGER
DESIGN SUPERVISOR

FED ROAD REG. NO.	STATE	CONTRACT NO.	SHEET NO.	TOTAL SHEETS
1	N.Y.	D259214	306	432

BRIDGE REHABILITATION PROJECT (ELEMENT SPECIFIC)
VARIOUS BRIDGES ON INTERSTATE 481
TOWNS OF DEWITT AND CICERO
ONONDAGA COUNTY
P.I.N. 305613 B.I.N. 1093571

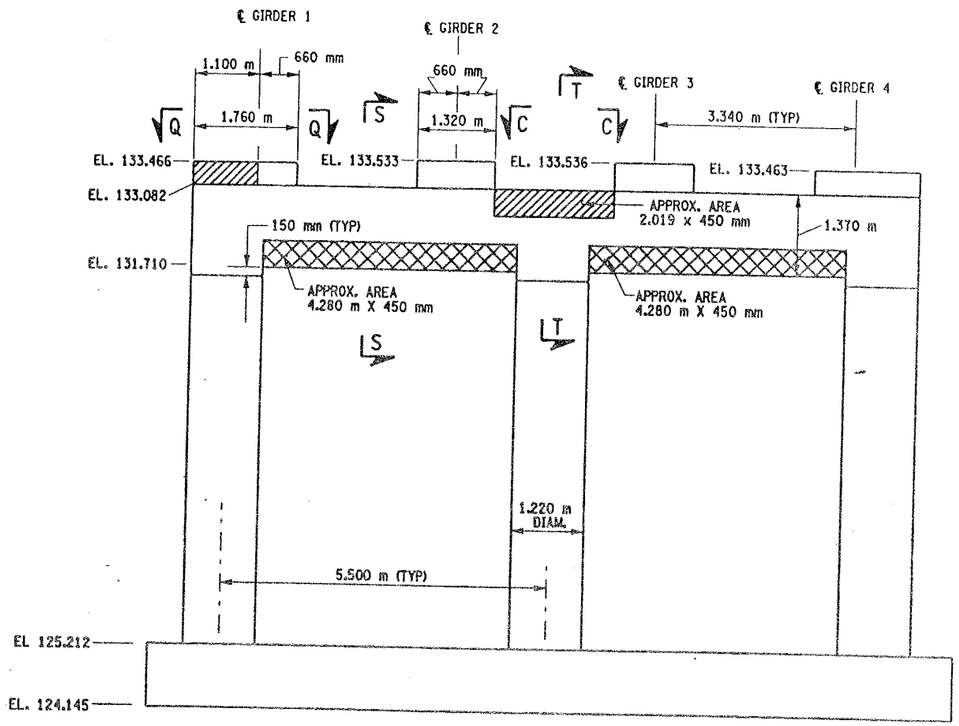

PIER 6 - FRONT FACE (LOOKING NORTH)

BIN 1093571

SCALE: 1 TO 50

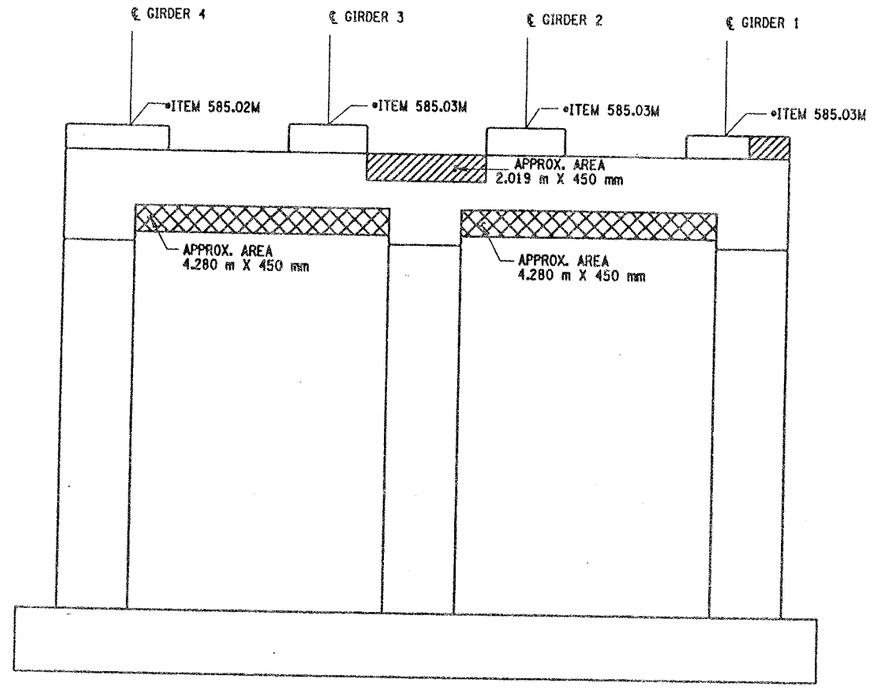

PIER 6- BACK FACE (LOOKING SOUTH)

BIN 1093571

SCALE: 1 TO 50

NOTES:

1. ALL REINFORCEMENT TO REMAIN.
2. RESTORE TO ORIGINAL DIMENSIONS.
3. PEDESTALS NUMERICALLY NUMBERED FROM WEST TO EAST.
4. FOR THE CONCRETE REPAIR AREAS, THE CONCRETE SHALL BE REMOVED TO AT LEAST 40mm MIN. BEYOND THE ENCOUNTERED REINFORCEMENT AND TO SOUND CONCRETE, A.O.B.E.
5. ELEVATIONS SHOWN ARE FROM ORIGINAL CONTRACT PLANS F.I.S.H. 70-7 AND ARE FOR REFERENCE ONLY.
6. REMOVAL DIMENSIONS SHOWN ON PLANS ARE ESTIMATED AND SHALL BE FIELD VERIFIED BY THE CONTRACTOR AND ENGINEER PRIOR TO BEGINNING OF REMOVAL OPERATIONS A.O.B.E.
7. PERFORM BEARING RESTORATION TO ALL EXPANSION BEARINGS (TO INCLUDE RESETTING OF UNDEREXTENDED OR OVEREXTENDED BEARINGS). SEE DWG. BR-10 & BR-11 FOR BEARING RESTORATION DETAILS. SEE DWG. PR17-1S FOR BEARING RESTORATION NOTES.
8. SEE DWG. PR17-1S FOR SECTION C-C.
9. SEE DWG. PR17-5N FOR SECTION T-T.
10. ALL CONCRETE REMOVAL SHALL BE SAWCUT TO PRODUCE NEAT REMOVAL LINES. COST TO BE INCLUDED IN THE PRICE BID FOR ITEM 582.05M AND 582.07M.
11. FOR JACKING NOTES SEE DWG PR17-1S.

• PERFORM STRUCTURAL LIFTING UNDER ITEM 585.02M - STRUCTURAL LIFTING OPERATIONS - TYPE B (LIFTING AT A PIER) OR ITEM 585.03M - STRUCTURAL LIFTING OPERATIONS - TYPE C (LIFTING AT A PIER WHERE THE CONTRACTOR SHALL BE REQUIRED TO LIFT OFF THE FOOTING AND/OR GROUND LEVEL.

JACKING LOADS:

D.L. = 75 MT
L.L. = 50 MT
TOTAL = 125 MT

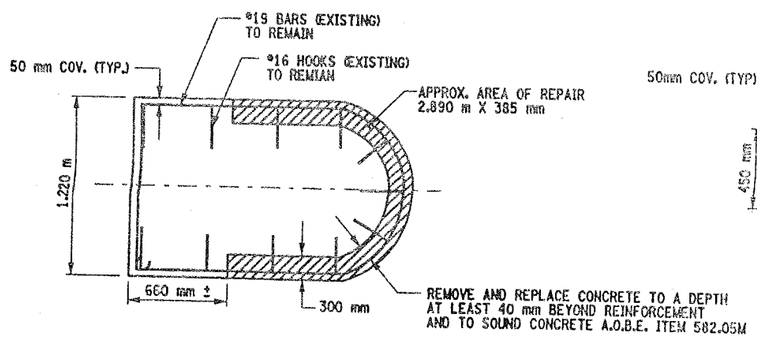

SECTION Q-Q

NOT TO SCALE

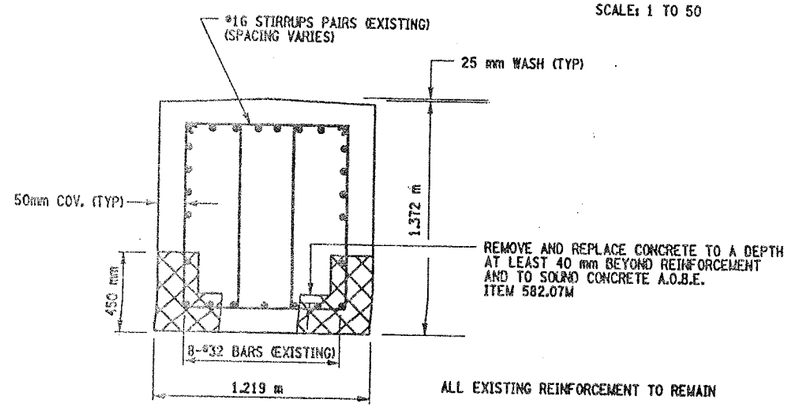

ALL EXISTING REINFORCEMENT TO REMAIN

SECTION S-S

NOT TO SCALE

LEGEND:

ITEM 582.05M - REMOVAL OF STRUCTURAL CONCRETE- REPLACE WITH CLASS A CONCRETE (CM)

ITEM 582.07M - REMOVAL OF STRUCTURAL CONCRETE - REPLACE WITH VERTICAL OVER-HEAD PATCH MATERIAL. (SM)

LIST OF ITEMS USED:

ITEM 15565.4302M - BRIDGE BEARING RESTORATION (EA)
ITEM 582.05M - REM. OF STRUC. CONC. - REPLACE WITH CLASS A CONCRETE (CM)
ITEM 582.07M - REM. OF STRUC. CONC. - REPL. W/ VERT. OVERHEAD PATCH MAT'L (SM)
ITEM 585.02M - STRUCTURAL LIFTING OPERATIONS - TYPE B (EA)
ITEM 585.03M - STRUCTURAL LIFTING OPERATION - TYPE C (EA)

ALL DIMENSIONS ARE IN mm UNLESS OTHERWISE NOTED

AS BUILT REVISIONS

SIGNATURE DATE

INTERSTATE 481 SB
OVER
CSX RAILROAD YARD
PIER 6

STATE OF NEW YORK
DEPARTMENT OF TRANSPORTATION

FILENAME	REGION	DATE	DRAWING NO.
305613AE.P6A	3	10/02	PR17-10S

DESIGN SUPERVISOR ____ JOB MANAGER ____ DESIGNED BY ____ CHECKED BY ____ ESTIMATED BY ____ DRAFTED BY ____ CHECKED BY ____

FED ROAD REG. NO.	STATE	CONTRACT NO.	SHEET NO.	TOTAL SHEETS
1	N.Y.	D259214	307	432

BRIDGE REHABILITATION PROJECT (ELEMENT SPECIFIC)
VARIOUS BRIDGES ON INTERSTATE 481
TOWNS OF DEWITT AND CICERO
ONONDAGA COUNTY
P.I.N. 305613 B.I.N. 1093571

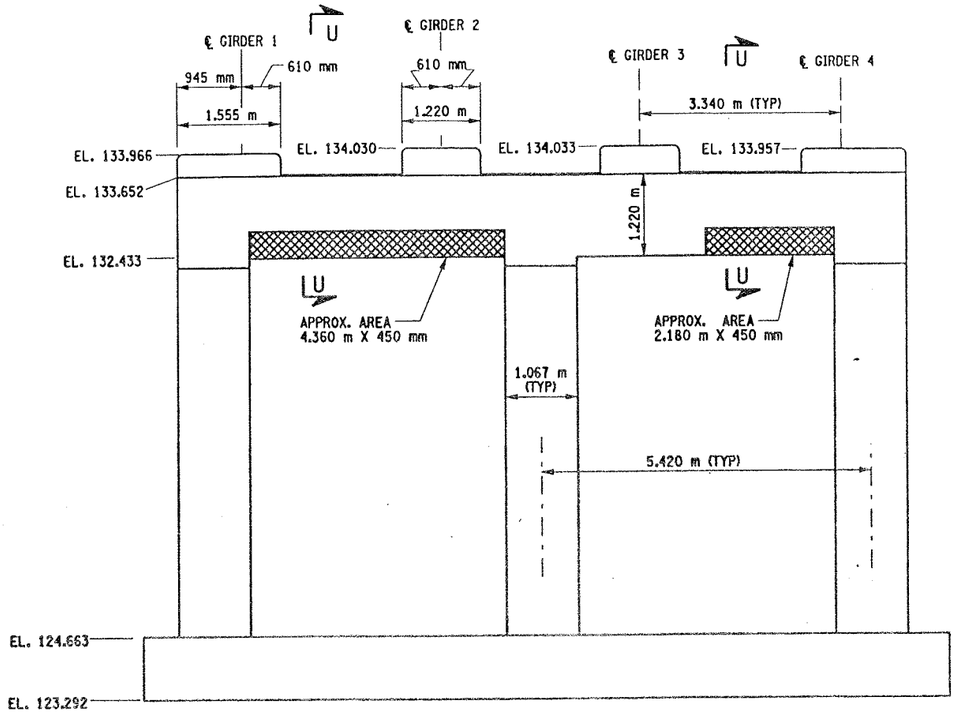

PIER 7 - FRONT FACE LOOKING NORTH
BIN 1093571
SCALE: 1 TO 50

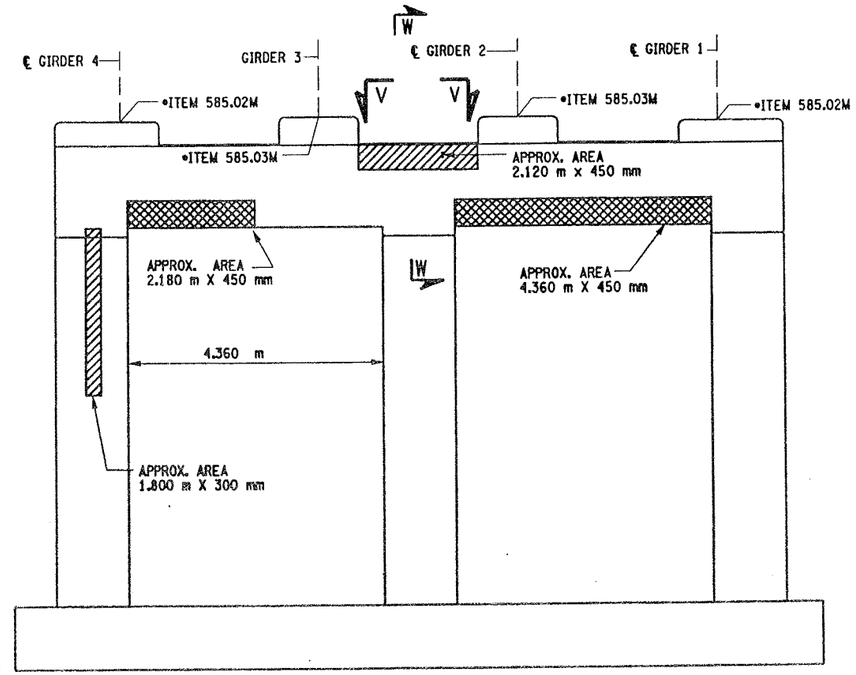

PIER 7 - BACK FACE LOOKING SOUTH
BIN 1093571
SCALE: 1 TO 50

NOTES:

1. ALL REINFORCEMENT TO REMAIN.
2. RESTORE TO ORIGINAL DIMENSIONS.
3. PEDESTALS NUMERICALLY NUMBERED FROM WEST TO EAST.
4. FOR THE CONCRETE REPAIR AREAS, THE CONCRETE SHALL BE REMOVED TO AT LEAST 40mm MIN. BEYOND THE ENCOUNTERED REINFORCEMENT AND TO SOUND CONCRETE. A.O.B.E.
5. ELEVATIONS SHOWN ARE FROM ORIGINAL CONTRACT PLANS F.I.S.H. 70-7 AND ARE FOR REFERENCE ONLY.
6. REMOVAL DIMENSIONS SHOWN ON PLANS ARE ESTIMATED AND SHALL BE FIELD VERIFIED BY THE CONTRACTOR PRIOR TO BEGINNING OF REMOVAL OPERATIONS A.O.B.E.
7. PERFORM BEARING RESTORATION TO ALL EXPANSION BEARINGS (TO INCLUDE RESETTING OF UNDEREXTENDED OR OVEREXTENDED BEARINGS). SEE DWG. PR17-1S FOR BEARING RESTORATION NOTES. SEE DWG. BR-10 & BR-11 FOR BEARING RESTORATION DETAILS.
8. ALL CONCRETE REMOVAL SHALL BE SAWCUT TO PRODUCE NEAT REMOVAL LINES. COST TO BE INCLUDED IN THE PRICE BID FOR ITEM 582.05M AND 582.07M.
9. FOR JACKING NOTES SEE DWG PR17-1S.

• PERFORM STRUCTURAL LIFTING UNDER ITEM 585.02M - STRUCTURAL LIFTING OPERATIONS - TYPE B (LIFTING AT A PIER) OR ITEM 585.03M - STRUCTURAL LIFTING OPERATIONS - TYPE C (LIFTING AT A PIER WHERE THE CONTRACTOR SHALL BE REQUIRED TO LIFT OFF THE FOOTING AND/OR GROUND LEVEL.

JACKING LOADS:

D.L. = 75 MT
L.L. = 50 MT
TOTAL = 125 MT

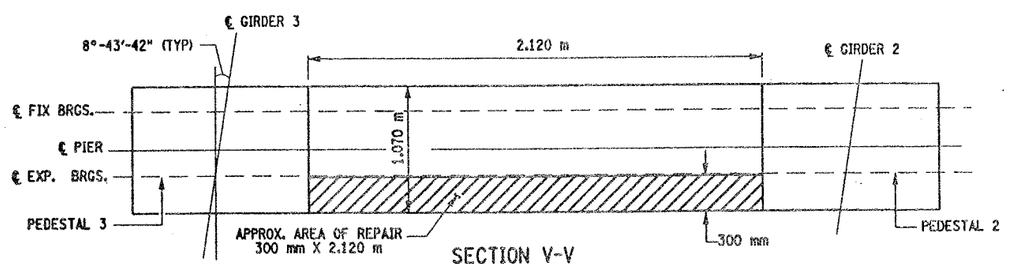

SECTION V-V
NOT TO SCALE

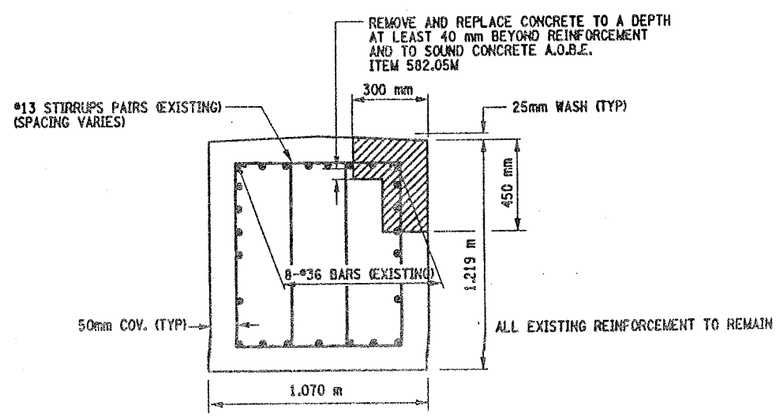

SECTION W-W
NOT TO SCALE

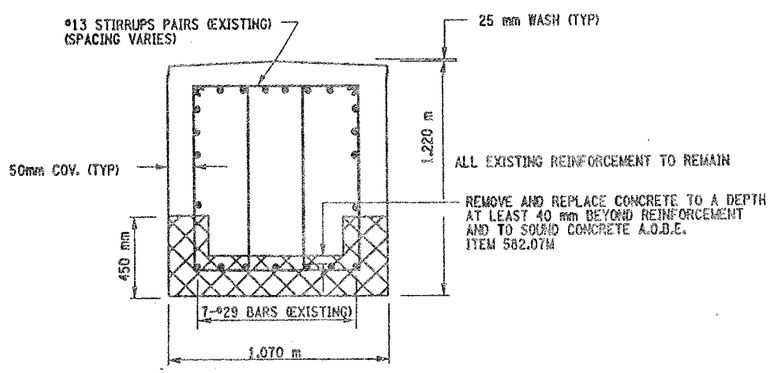

SECTION U-U
NOT TO SCALE

LEGEND:

ITEM 582.05M - REMOVAL OF STRUCTURAL CONCRETE- REPLACE WITH CLASS A CONCRETE (CM)

ITEM 582.07M - REMOVAL OF STRUCTURAL CONCRETE - REPLACE WITH VERTICAL OVER-HEAD PATCH MATERIAL. (SM)

ALL DIMENSIONS ARE IN mm UNLESS OTHERWISE NOTED

LIST OF ITEMS USED:

ITEM 15565.4302M - BRIDGE BEARING RESTORATION
ITEM 582.05M - REM. OF STRUC. CONC. - REPLACE WITH CLASS A CONCRETE (CM)
ITEM 582.07M - REM. OF STRUC. CONC. - REPL. W/ VERT. OVERHEAD PATCH MAT.L (SM)
ITEM 585.02M - STRUCTURAL LIFTING OPERATIONS - TYPE B (EA)
ITEM 585.03M - STRUCTURAL LIFTING OPERATION - TYPE C (EA)

AS BUILT REVISIONS

SIGNATURE DATE

INTERSTATE 481 SB
OVER
CSX RAILROAD YARD
PIER 7

STATE OF NEW YORK
DEPARTMENT OF TRANSPORTATION

FILENAME	REGION	DATE	DRAWING NO.
305613AEJP7A	3	10/02	PR17-11S

DESIGN SUPERVISOR ____ JOB MANAGER ____ DESIGNED BY ____ CHECKED BY ____ ESTIMATED BY ____ DRAFTED BY ____ CHECKED BY ____

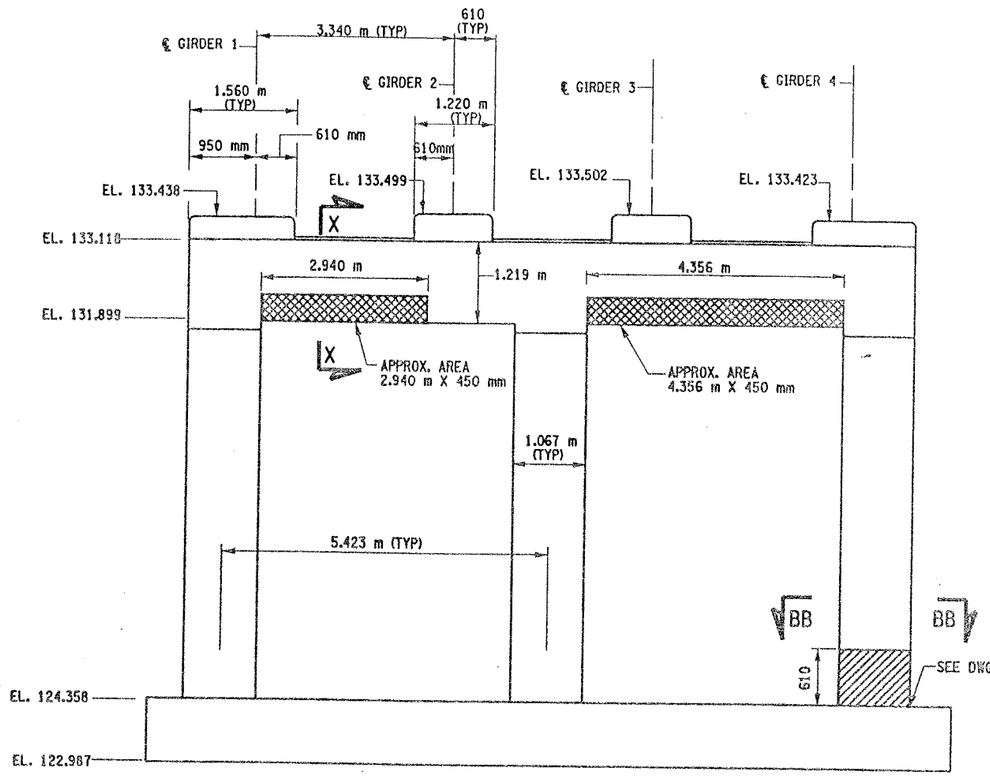

PIER 8 - FRONT FACE (LOOKING NORTH)

BIN 1093571

SCALE: 1 TO 50

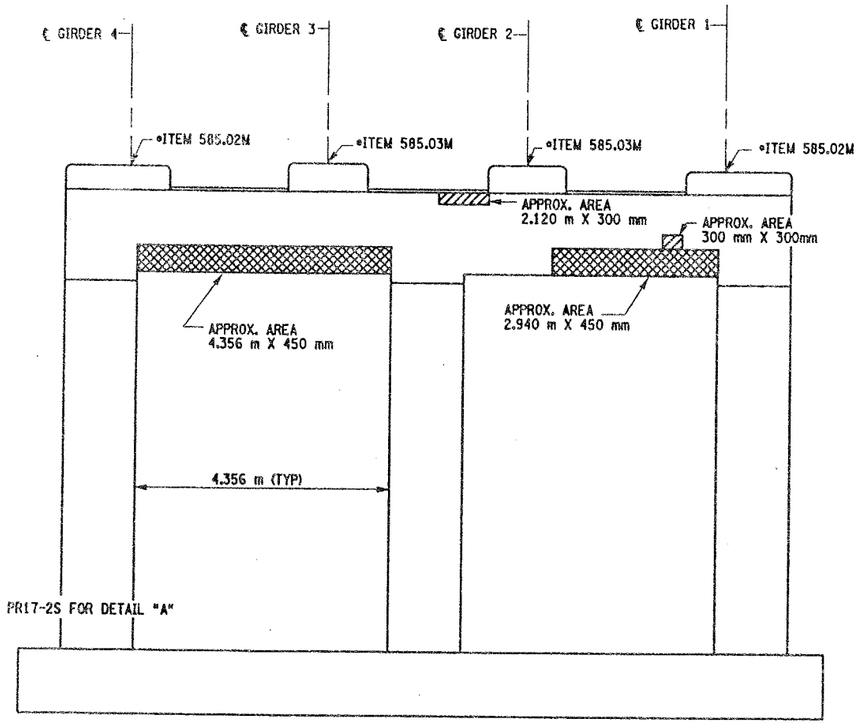

PIER 8 - BACK FACE (LOOKING SOUTH)

BIN 1093571

SCALE: 1 TO 50

FED ROAD REG. NO.	STATE	CONTRACT NO.	SHEET NO.	TOTAL SHEETS
1	N.Y.	D259214	308	432

BRIDGE REHABILITATION PROJECT (ELELMENT SPECIFIC)

VARIOUS BRIDGES ON INTERSTATE 481

TOWNS OF DEWITT AND CICERO

ONONDAGA COUNTY

P.I.N. 305613 | B.I.N. 1093571

NOTES:

1. ALL REINFORCEMENT TO REMAIN.
2. RESTORE TO ORIGINAL DIMENSIONS.
3. PEDESTALS NUMERICALLY NUMBERED FROM WEST TO EAST.
4. FOR THE CONCRETE REPAIR AREAS, THE CONCRETE SHALL BE REMOVED TO AT LEAST 40mm MIN. BEYOND THE ENCOUNTERED REINFORCEMENT AND TO SOUND CONCRETE, A.O.B.E.
5. ELEVATIONS SHOWN ARE FROM ORIGINAL CONTRACT PLANS F.I.S.H. TO-7 AND ARE FOR REFERENCE ONLY.
6. REMOVAL DIMENSIONS SHOWN ON PLANS ARE ESTIMATED AND SHALL BE FIELD VERIFIED BY THE CONTRACTOR AND ENGINEER PRIOR TO BEGINNING OF REMOVAL OPERATIONS A.O.B.E.
7. SEE DWG. PR17-7N FOR SECTIONS X-X.
8. ALL CONCRETE REMOVAL SHALL BE SAWCUT TO PRODUCE NEAT REMOVAL LINES. COST TO BE INCLUDED IN THE PRICE BID FOR ITEM 582.05M AND ITEM 582.07M.
9. FOR JACKING NOTES SEE DWG. PR17-1S
10. CONTRACTOR SHALL REMOVE DEBRIS FROM TOP OF PEDESTALS AND TOP OF CAP BEAM. COST TO BE INCLUDED IN THE PRICE BID FOR VARIOUS OTHER ITEMS OF THE CONTRACT.

LEGEND:

ITEM 582.05M - REMOVAL OF STRUCTURAL CONCRETE- REPLACE WITH CLASS A CONCRETE (CM)

ITEM 582.07M - REMOVAL OF STRUCTURAL CONCRETE - REPLACE WITH VERTICAL OVER-HEAD PATCH MATERIAL. (SM)

• PERFORM STRUCTURAL LIFTING UNDER ITEM 585.02M - STRUCTURAL LIFTING OPERATIONS - TYPE B (LIFTING AT A PIER) OR ITEM 585.03M - STRUCTURAL LIFTING OPERATIONS - TYPE C (LIFTING AT A PIER WHERE THE CONTRACTOR SHALL BE REQUIRED TO LIFT OFF THE FOOTING AND/OR GROUND LEVEL.

JACKING LOADS:

D.L. = 75 MT
L.L. = 50 MT
TOTAL = 125 MT

THE CONTRACTOR SHALL ONLY REMOVE AND REPLACE CONCRETE ON 1/4 OF THE CIRCUMFERENCE OF THE COLUMN SIMUL-TANEOUSLY, FOR THE FULL CURING PERIOD.

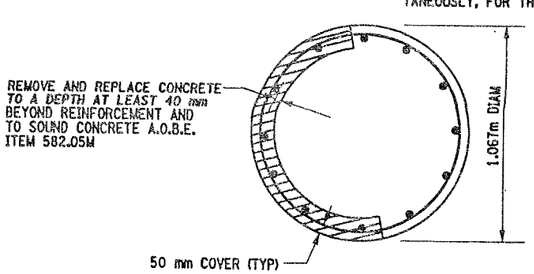

SECTION BB-BB

NOT TO SCALE

LIST OF ITEMS USED:

ITEM 582.05M - REM. OF STRUC. CONC. - REPLACE WITH CLASS A CONCRETE (CM)
ITEM 582.07M - REM. OF STRUC. CONC. - REPL. W/ VERT. OVERHEAD PATCH MAT'L (SM)
ITEM 585.02M - STRUCTURAL LIFTING OPERATIONS - TYPE B (EA)
ITEM 585.03M - STRUCTURAL LIFTING OPERATION - TYPE C (EA)

ALL DIMENSIONS ARE IN mm UNLESS OTHERWISE NOTED

AS BUILT REVISIONS

SIGNATURE | DATE

INTERSTATE 481 SB
OVER
CSX RAILROAD
PIER 8

STATE OF NEW YORK
DEPARTMENT OF TRANSPORTATION

FILENAME	REGION	DATE	DRAWING NO.
305613AE.P8A	3	10/02	PR17-12S

DESIGN SUPERVISOR ____ JOB MANAGER ____ DESIGNED BY ____ CHECKED BY ____ ESTIMATED BY ____ DRAFTED BY ____ CHECKED BY ____

FED ROAD REG. NO.	STATE	CONTRACT NO.	SHEET NO.	TOTAL SHEETS
1	N.Y.	D259214	309	432

BRIDGE REHABILITATION PROJECT (ELEMENT SPECIFIC)
VARIOUS BRIDGES ON INTERSTATE 481
TOWNS OF DEWITT AND CICERO
ONONDAGA COUNTY
P.I.N. 305613 B.I.N. 1093571

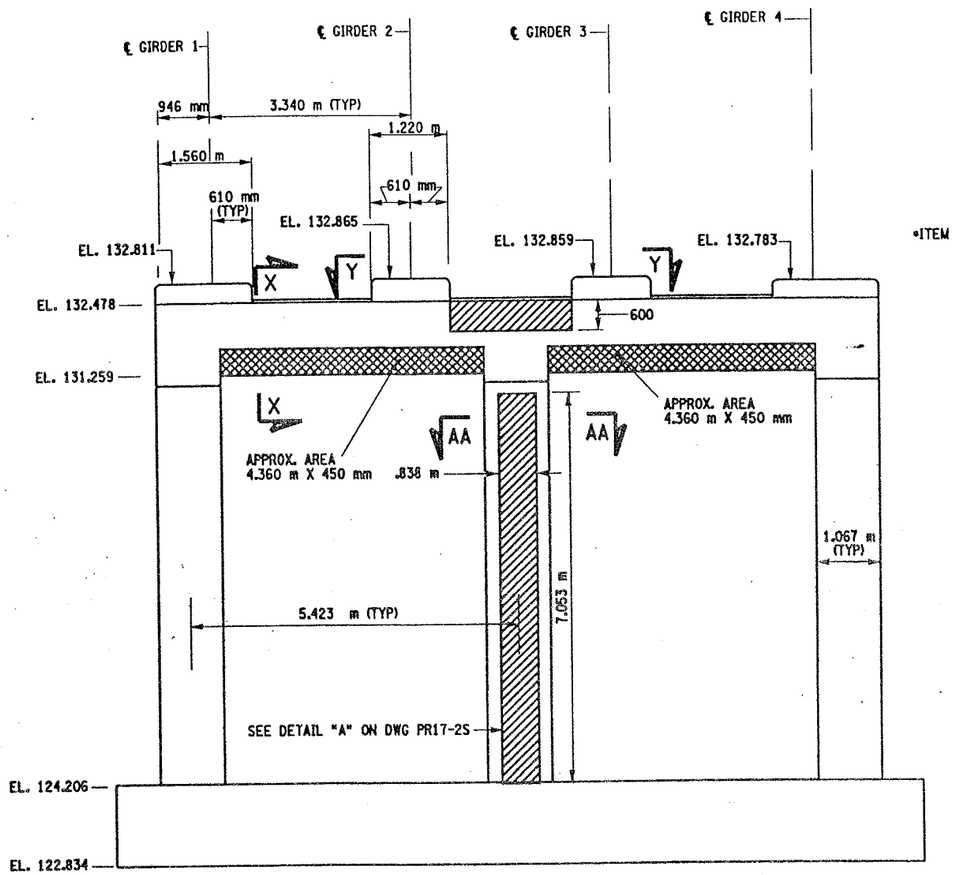

PIER 9 - FRONT FACE (LOOKING NORTH)
BIN 1093571
SCALE: 1 TO 50

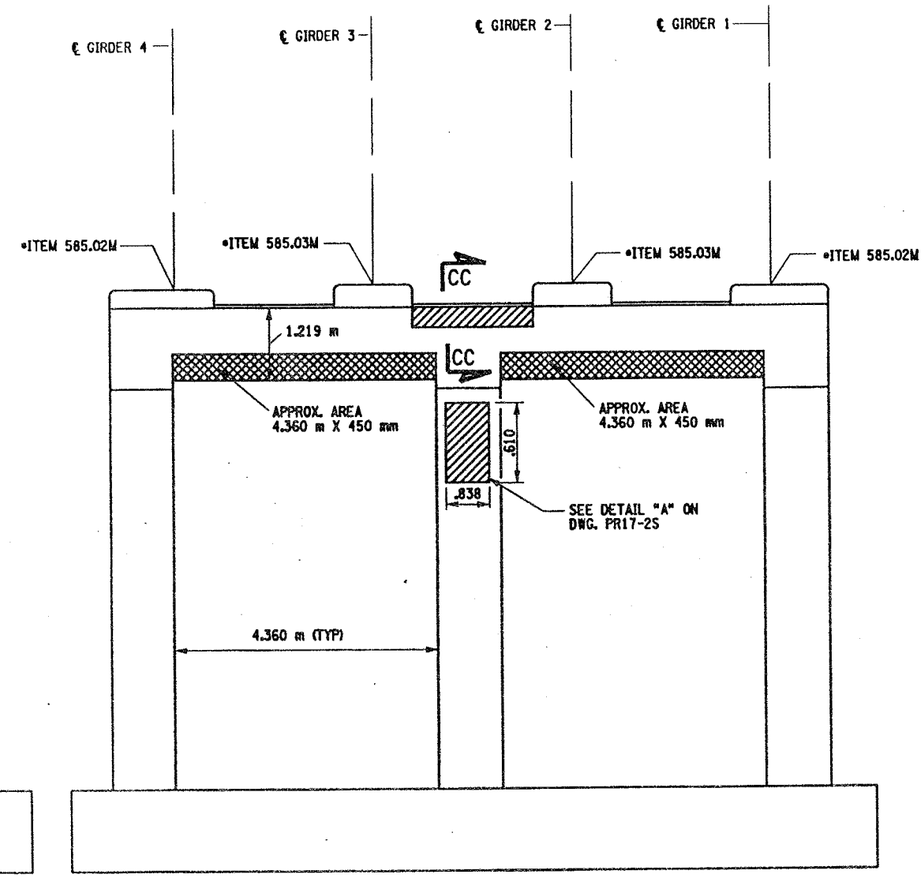

PIER 9 - BACK FACE (LOOKING SOUTH)
BIN 1093571
SCALE: 1 TO 50

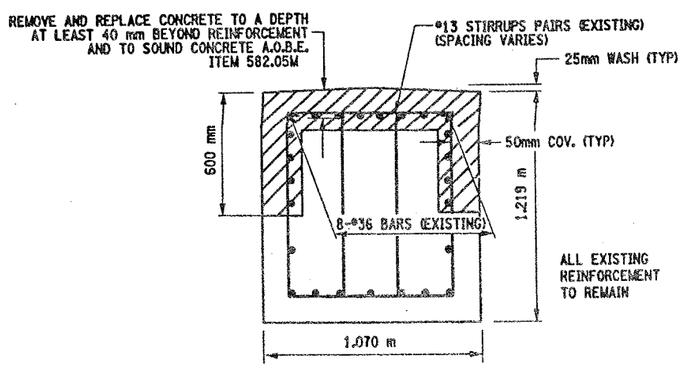

SECTION CC-CC
NOT TO SCALE

NOTES:

1. ALL REINFORCEMENT TO REMAIN.
2. RESTORE TO ORIGINAL DIMENSIONS.
3. PEDESTALS NUMERICALLY NUMBERED FROM WEST TO EAST.
4. FOR THE CONCRETE REPAIR AREAS, THE CONCRETE SHALL BE REMOVED TO AT LEAST 40mm MIN. BEYOND THE ENCOUNTERED REINFORCEMENT AND TO SOUND CONCRETE, A.O.B.E.
5. ELEVATIONS SHOWN ARE FROM ORIGINAL CONTRACT PLANS F.I.S.H. 70-7 AND ARE FOR REFERENCE ONLY.
6. REMOVAL DIMENSIONS SHOWN ON PLANS ARE ESTIMATED AND SHALL BE FIELD VERIFIED BY THE CONTRACTOR PRIOR TO BEGINNING OF REMOVAL OPERATIONS A.O.B.E.
7. PERFORM BEARING RESTORATION TO ALL EXPANSION BEARINGS (TO INCLUDE RESETTING OF UNDEREXTENDED OR OVEREXTENDED BEARINGS). SEE DWG. PR17-1S FOR BEARING RESTORATION NOTES. SEE DWG. BR-10 & BR-11 FOR BEARING RESTORATION DETAILS.
8. SEE DWG. PR17-7N FOR SECTIONS AA-AA, Y-Y AND X-X.
9. ALL CONCRETE REMOVAL SHALL BE SAWCUT TO PRODUCE NEAT REMOVAL LINES. COST TO BE INCLUDED IN THE PRICE BID FOR ITEM 582.05M AND 582.07M.
10. FOR JACKING NOTES SEE DWG PR17-1S
11. CONTRACTOR SHALL REMOVE DEBRIS FROM TOP OF CAP BEAM. COST TO BE INCLUDED IN THE PRICE BID FOR VARIOUS OTHER ITEMS OF CONTRACT.

• PERFORM STRUCTURAL LIFTING UNDER ITEM 585.02M - STRUCTURAL LIFTING OPERATIONS - TYPE B (LIFTING AT A PIER) OR ITEM 585.03M - STRUCTURAL LIFTING OPERATIONS - TYPE C (LIFTING AT A PIER WHERE THE CONTRACTOR SHALL BE REQUIRED TO LIFT OFF THE FOOTING AND/OR GROUND LEVEL.

JACKING LOADS:

D.L. = 75 MT
L.L. = 50 MT
TOTAL = 125 MT

LEGEND:

ITEM 582.05M - REMOVAL OF STRUCTURAL CONCRETE- REPLACE WITH CLASS A CONCRETE. (CM)

ITEM 582.07M - REMOVAL OF STRUCTURAL CONCRETE - REPLACE WITH VERTICAL OVER-HEAD PATCH MATERIAL. (SM)

LIST OF ITEMS USED:

ITEM 15565.4302M - BRIDGE BEARING RESTORATION (EA)
ITEM 582.05M - REM. OF STRUC. CONC. - REPLACE WITH CLASS A CONCRETE (CM)
ITEM 582.07M - REM. OF STRUC. CONC. - REPL. W/ VERT. OVERHEAD PATCH MAT'L. (SM)
ITEM 585.02M - STRUCTURAL LIFTING OPERATIONS - TYPE B (EA)
ITEM 585.03M - STRUCTURAL LIFTING OPERATION - TYPE C (EA)

ALL DIMENSIONS ARE IN mm UNLESS OTHERWISE NOTED

AS BUILT REVISIONS

SIGNATURE DATE

INTERSTATE 481 SB
OVER
CSX RAILROAD YARD
PIER 9

STATE OF NEW YORK
DEPARTMENT OF TRANSPORTATION

FILENAME	REGION	DATE	DRAWING NO.
305613AE.P9A	3	10/02	PR17-13S

CHECKED BY
DRAFTED BY
ESTIMATED BY
CHECKED BY
DESIGNED BY
JOB MANAGER
DESIGN SUPERVISOR

FED ROAD REG. NO.	STATE	CONTRACT NO.	SHEET NO.	TOTAL SHEETS
1	N.Y.	D259214	310	432

BRIDGE REHABILITATION PROJECT (ELEMENT SPECIFIC)
VARIOUS BRIDGES ON INTERSTATE 481
TOWNS OF DEWITT AND CICERO
ONONDAGA COUNTY
P.I.N. 305613 B.I.N. 1093571

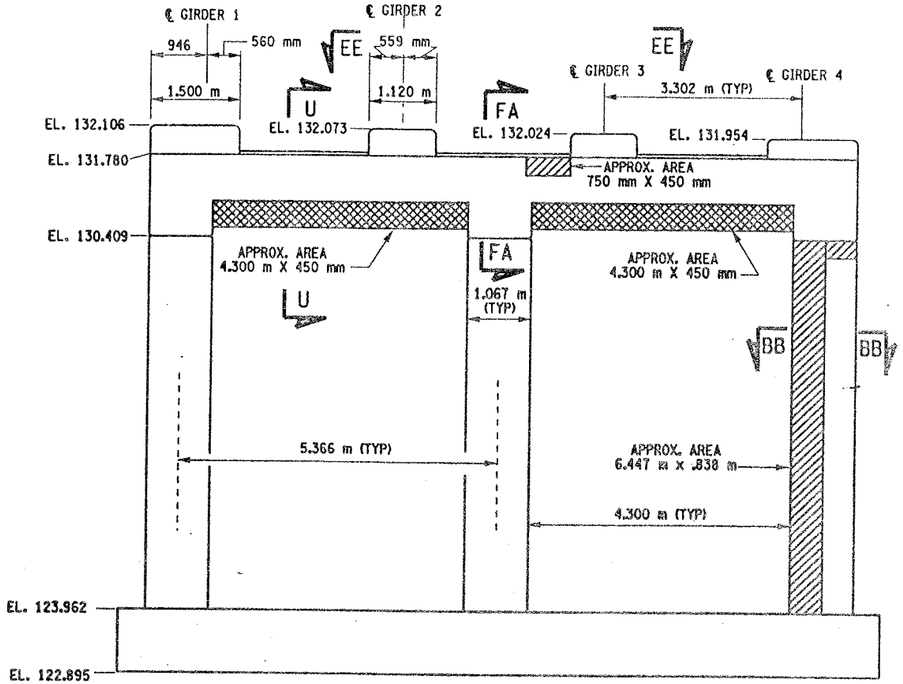

PIER 10 - FRONT FACE (LOOKING NORTH)
BIN 1093571
SCALE: 1 TO 50

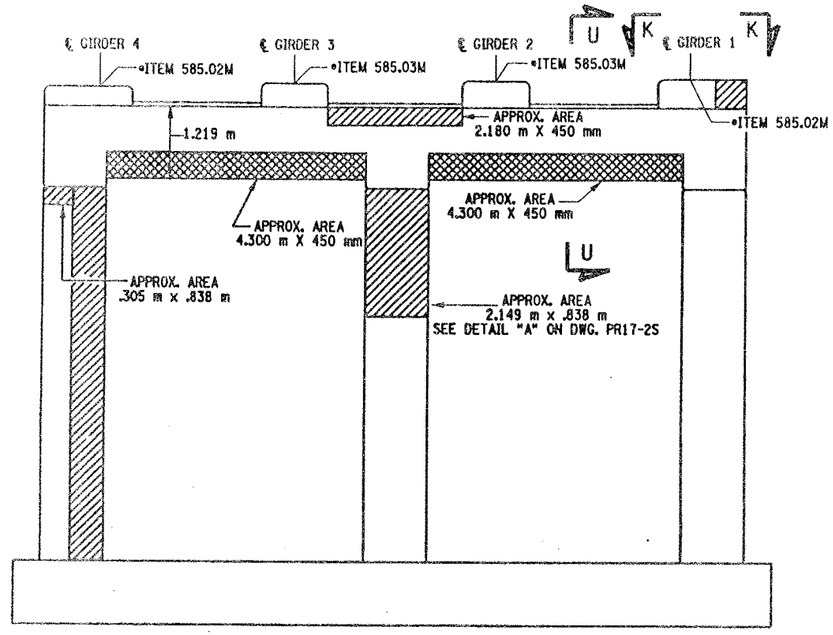

PIER 10 - BACK FACE (LOOKING SOUTH)
BIN 1093571
SCALE: 1 TO 50

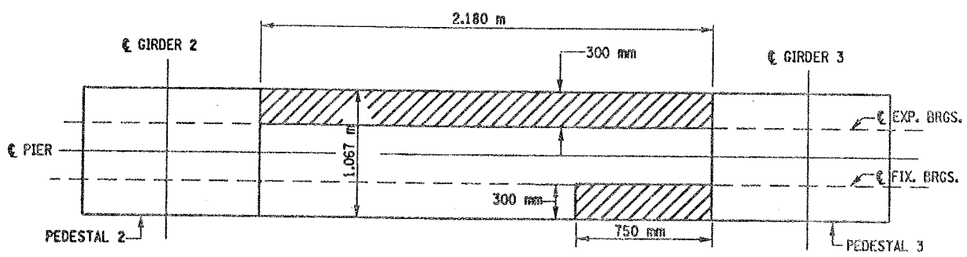

SECTION EE-EE
NOT TO SCALE

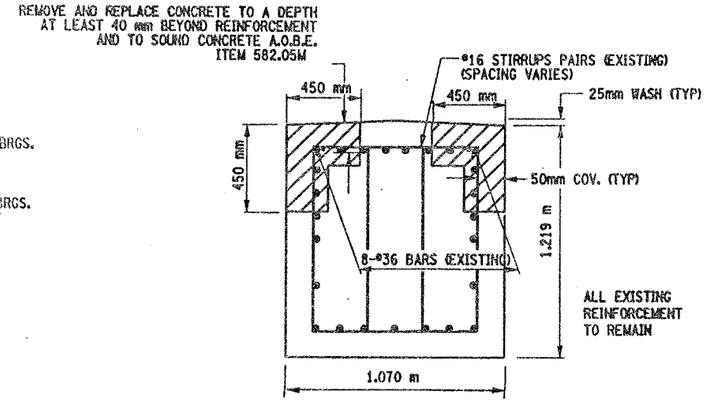

SECTION FA-FA
NOT TO SCALE

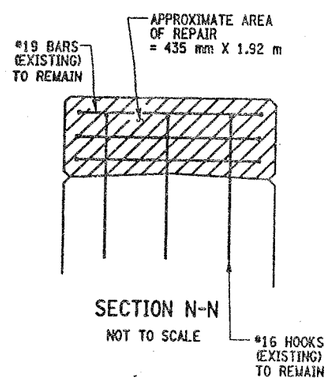

SECTION N-N
NOT TO SCALE

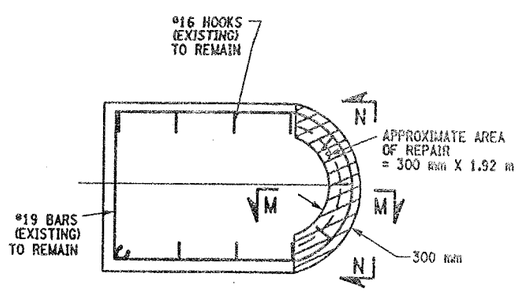

SECTION K-K
NOT TO SCALE

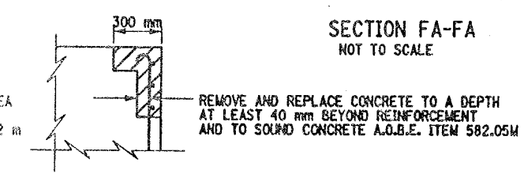

SECTION M-M
NOT TO SCALE

LIST OF ITEMS USED:

ITEM 15565.4302M - BRIDGE BEARING RESTORATION (EA)
ITEM 582.05M - REM. OF STRUC. CONC. - REPLACE WITH CLASS A CONCRETE (CM)
ITEM 582.07M - REM. OF STRUC. CONC. - REPL. W/ VERT. OVERHEAD PATCH MAT'L (SM)
ITEM 585.02M - STRUCTURAL LIFTING OPERATIONS - TYPE B (EA)
ITEM 585.03M - STRUCTURAL LIFTING OPERATION - TYPE C (EA)

NOTES:

1. ALL REINFORCEMENT TO REMAIN.
2. RESTORE TO ORIGINAL DIMENSIONS.
3. PEDESTALS NUMERICALLY NUMBERED FROM WEST TO EAST.
4. FOR THE CONCRETE REPAIR AREAS, THE CONCRETE SHALL BE REMOVED TO AT LEAST 40mm MIN. BEYOND THE ENCOUNTERED REINFORCEMENT AND TO SOUND CONCRETE, A.O.B.E.
5. ELEVATIONS SHOWN ARE FROM ORIGINAL CONTRACT PLANS F.I.S.H. 70-7 AND ARE FOR REFERENCE ONLY.
6. REMOVAL DIMENSIONS SHOWN ON PLANS ARE ESTIMATED AND SHALL BE FIELD VERIFIED BY THE CONTRACTOR PRIOR TO BEGINNING OF REMOVAL OPERATIONS A.O.B.E.
7. PERFORM BEARING RESTORATION TO ALL EXPANSION BEARINGS (TO INCLUDE RESETTING OF UNDEREXTENDED OR OVEREXTENDED BEARINGS). SEE DWG. PR17-1S FOR BEARING RESTORATION NOTES. SEE DWG. BR-10 & BR-11 FOR BEARING RESTORATION DETAILS.
8. SEE DWG. PR17-12S FOR SECTION BB-BB.
9. ALL CONCRETE REMOVAL SHALL BE SAWCUT TO PRODUCE NEAT REMOVAL LINES. COST TO BE INCLUDED IN THE PRICE BID FOR ITEM 582.05M AND 582.07M.
10. FOR JACKING NOTES SEE DWG PR17-1S.
11. SEE DWG. PR-17-11S FOR SECTION U-U.

• PERFORM STRUCTURAL LIFTING UNDER ITEM 585.02M - STRUCTURAL LIFTING OPERATIONS - TYPE B (LIFTING AT A PIER) OR ITEM 585.03M - STRUCTURAL LIFTING OPERATIONS - TYPE C (LIFTING AT A PIER WHERE THE CONTRACTOR SHALL BE REQUIRED TO LIFT OFF THE FOOTING AND/OR GROUND LEVEL.

JACKING LOADS:

D.L. = 75 MT
L.L. = 50 MT
TOTAL = 125 MT

LEGEND:

ITEM 582.05M - REMOVAL OF STRUCTURAL CONCRETE- REPLACE WITH CLASS A CONCRETE (CM)

ITEM 582.07M - REMOVAL OF STRUCTURAL CONCRETE - REPLACE WITH VERTICAL OVER-HEAD PATCH MATERIAL. (SM)

ALL DIMENSIONS ARE IN mm UNLESS OTHERWISE NOTED

AS BUILT REVISIONS

SIGNATURE DATE

INTERSTATE 481 SB
OVER
CSX RAILROAD YARD
PIER 10

STATE OF NEW YORK
DEPARTMENT OF TRANSPORTATION

FILENAME	REGION	DATE	DRAWING NO.
305613AE.P10	3	10/02	PR17-14S

DESIGN SUPERVISOR ____ JOB MANAGER ____ DESIGNED BY ____ ESTIMATED BY ____ CHECKED BY ____ DRAFTED BY ____ CHECKED BY ____

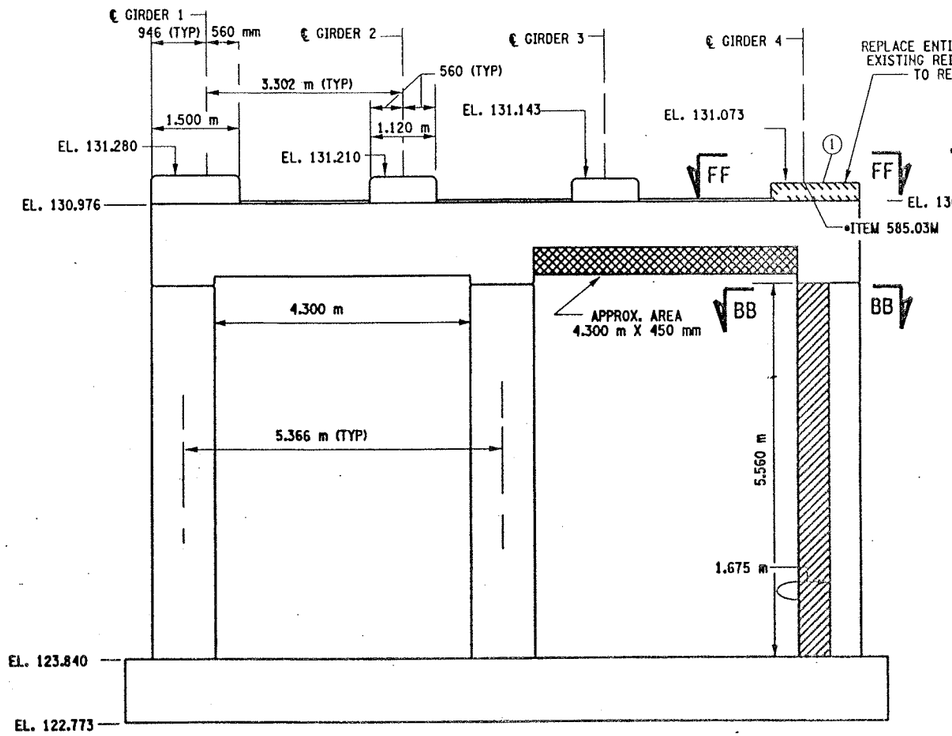

PIER 11 - FRONT FACE (LOOKING NORTH)
BIN 1093571

SCALE: 1 TO 50

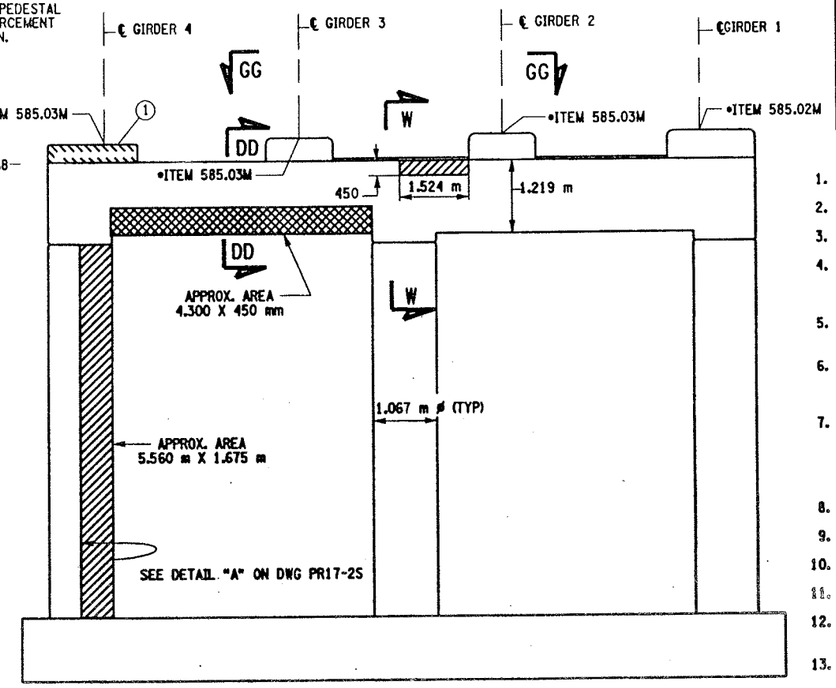

PIER 11 - BACK FACE (LOOKING SOUTH)
BIN 1093571

SCALE: 1 TO 50

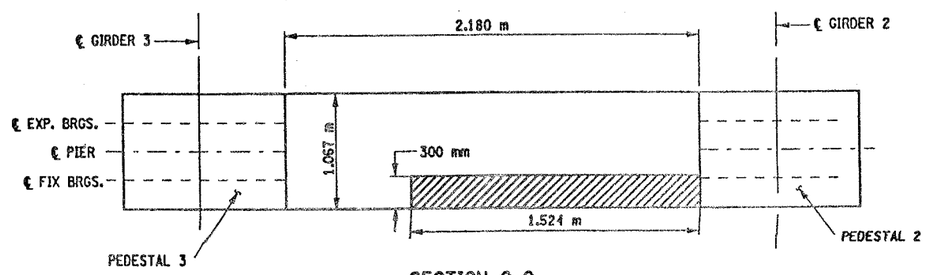

SECTION G-G

NOT TO SCALE

CONCRETE TABLE (m³)		
PLACEMENT	QUANTITY	ITEM NO.
1	0.49	555.0105M

① INDICATES CONCRETE PLACEMENT NUMBER

LIST OF ITEMS USED

ITEM 15565.4302M - BRIDGE BEARING RESTORATION (EA)
ITEM 555.0105M - CONCRETE FOR STRUCTURES, CLASS A (CM)
ITEM 580.01M - REMOVAL OF STRUCTURAL CONCRETE (CM)
ITEM 582.05M - REM. OF STRUC. CONC. - REPLACE WITH CLASS A CONCRETE (CM)
ITEM 582.07M - REM. OF STRUC. CONC. - REPL. W/ VERT. OVERHEAD PATCH MAT'L. (SM)
ITEM 585.02M - STRUCTURAL LIFTING OPERATIONS - TYPE B (EA)
ITEM 585.03M - STRUCTURAL LIFTING OPERATION - TYPE (EA)

FED ROAD REG. NO.	STATE	CONTRACT NO.	SHEET NO.	TOTAL SHEETS
1	N.Y.	D259214	311	432

BRIDGE REHABILITATION PROJECT (ELEMENT SPECIFIC)
VARIOUS BRIDGES ON INTERSTATE 481
TOWNS OF DEWITT AND CICERO
ONONDAGA COUNTY
P.I.N. 305613 B.I.N. 1093571

NOTES:

1. ALL REINFORCEMENT TO REMAIN.
2. RESTORE TO ORIGINAL DIMENSIONS.
3. PEDESTALS NUMERICALLY NUMBERED FROM WEST TO EAST.
4. FOR THE CONCRETE REPAIR AREAS, THE CONCRETE SHALL BE REMOVED TO AT LEAST 40mm MIN. BEYOND THE ENCOUNTERED REINFORCEMENT AND TO SOUND CONCRETE, A.O.B.E.
5. ELEVATIONS SHOWN ARE FROM ORIGINAL CONTRACT PLANS F.I.S.H. 70-7 AND ARE FOR REFERENCE ONLY.
6. REMOVAL DIMENSIONS SHOWN ON PLANS ARE ESTIMATED AND SHALL BE FIELD VERIFIED BY THE CONTRACTOR PRIOR TO BEGINNING OF REMOVAL OPERATIONS A.O.B.E.
7. PERFORM BEARING RESTORATION TO ALL EXPANSION BEARINGS (TO INCLUDE RESETTING OF UNDEREXTENDED OR OVEREXTENDED BEARINGS). SEE DWG. PR17-1S FOR BEARING RESTORATION NOTES. SEE DWG. BR-10 & BR-11 FOR BEARING RESTORATION DETAILS.
8. SEE DWG. PR17-12S FOR SECTION BB-BB.
9. SEE DWG PR17-10N FOR SECTION DD-DD.
10. SEE DWG PR17-11N FOR SECTION FF-FF.
11. SEE DWG. PR17-11S FOR SECTION W-W.
12. PEDESTAL 4 SHALL BE REPLACED TO EXISITING DIMENSIONS, ITEM 555.0105 M.
13. ALL CONCRETE REMOVAL SHALL BE SAWCUT TO PRODUCE NEAT REMOVAL LINES. COST TO BE INCLUDED IN THE PRICE BID FOR ITEM 582.05M AND ITEM 582.07M.
14. FOR JACKING NOTES SEE DWG. PR17-1S

• PERFORM STRUCTURAL LIFTING UNDER ITEM 585.02M - STRUCTURAL LIFTING OPERATIONS - TYPE B (LIFTING AT A PIER) OR ITEM 585.03M - STRUCTURAL LIFTING OPERATIONS - TYPE C (LIFTING AT A PIER WHERE THE CONTRACTOR SHALL BE REQUIRED TO LIFT OFF THE FOOTING AND/OR GROUND LEVEL.

JACKING LOADS:

D.L. = 75 MT
L.L. = 50 MT
TOTAL = 125 MT

LEGEND:

ITEM 582.05M - REMOVAL OF STRUCTURAL CONCRETE- REPLACE WITH CLASS A CONCRETE. (CM)

ITEM 582.07M - REMOVAL OF STRUCTURAL CONCRETE - REPLACE WITH VERTICAL OVER-HEAD PATCH MATERIAL. (SM)

ITEM 580.01 M - REMOVAL OF STRUCTURAL CONCRETE. (CM) AND ITEM 555.0105 M - CONCRETE FOR STRUCTURES CLASS A. (CM)

ALL DIMENSIONS ARE IN mm UNLESS OTHERWISE NOTED

AS BUILT REVISIONS

SIGNATURE DATE

INTERSTATE 481 SB
OVER
CSX RAILROAD YARD
PIER 11

STATE OF NEW YORK
DEPARTMENT OF TRANSPORTATION

FILENAME	REGION	DATE	DRAWING NO.
305613AE.P11	3	10/02	PR17-15S

DESIGN SUPERVISOR ____ JOB MANAGER ____ DESIGNED BY ____ CHECKED BY ____ DRAFTED BY ____ CHECKED BY ____ ESTIMATED BY ____

FED ROAD REG. NO.	STATE	CONTRACT NO.	SHEET NO.	TOTAL SHEETS
1	N.Y.	D259214	314	432

BRIDGE REHABILITATION PROJECT (ELEMENT SPECIFIC)
VARIOUS BRIDGES ON INTERSTATE 481
TOWNS OF DEWITT AND CICERO
ONONDAGA COUNTY
P.I.N. 305613 B.I.N. 1093571

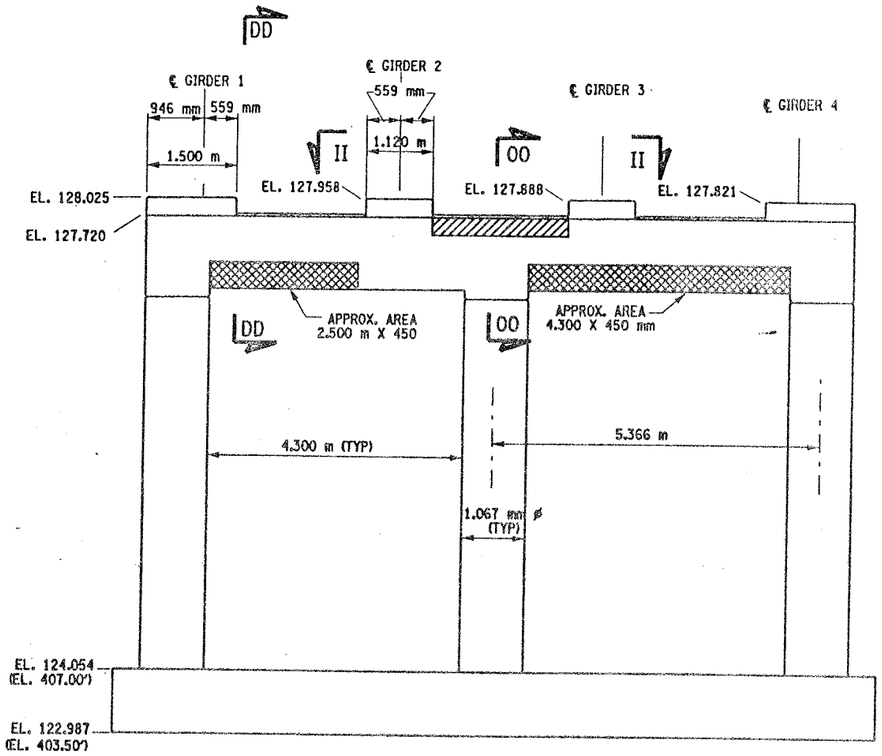

PIER 14 - FRONT FACE (LOOKING NORTH)
BIN 1093571
SCALE: 1 TO 50

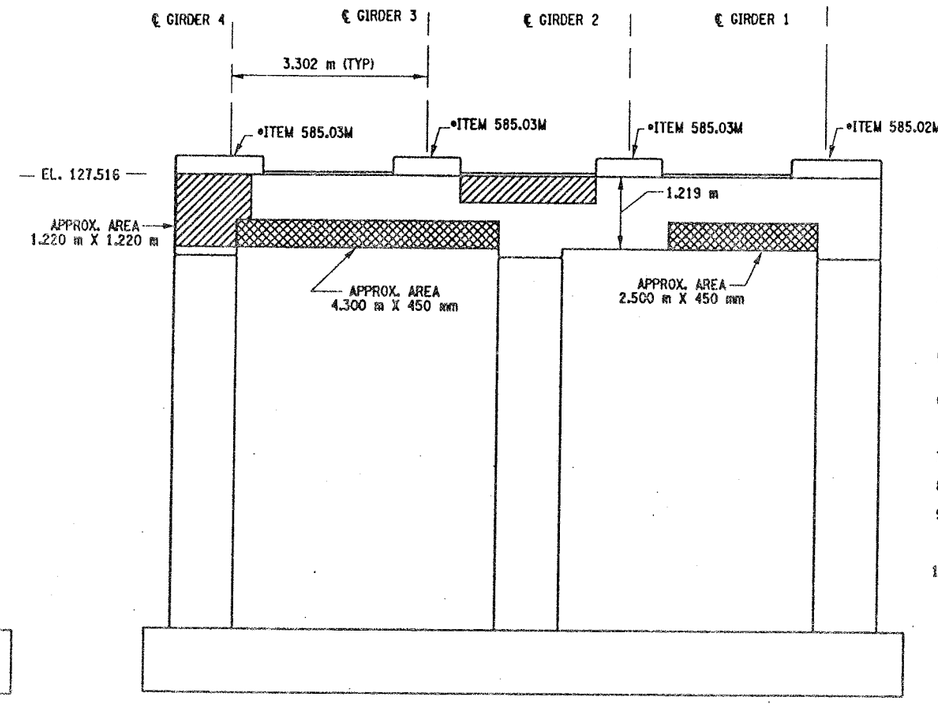

PIER 14 - BACK FACE (LOOKING SOUTH)
BIN 1093571
SCALE: 1 TO 50

NOTES:

1. ALL REINFORCEMENT TO REMAIN.
2. RESTORE TO ORIGINAL DIMENSIONS.
3. PEDESTALS NUMERICALLY NUMBERED FROM WEST TO EAST.
4. FOR THE CONCRETE REPAIR AREAS, THE CONCRETE SHALL BE REMOVED TO AT LEAST 40mm MIN. BEYOND THE ENCOUNTERED REINFORCEMENT AND TO SOUND CONCRETE, A.O.B.E.
5. ELEVATIONS SHOWN ARE FROM ORIGINAL CONTRACT PLANS F.I.S.H. TO-7 AND ARE FOR REFERENCE ONLY.
6. REMOVAL DIMENSIONS SHOWN ON PLANS ARE ESTIMATED AND SHALL BE FIELD VERIFIED BY THE CONTRACTOR PRIOR TO BEGINNING OF REMOVAL OPERATIONS A.O.B.E.
7. SEE DWG. PR17-10N FOR SECTION DD-DD.
8. SEE DWG. PR17-16S FOR SECTION II-II.
9. ALL CONCRETE REMOVAL SHALL BE SAWCUT TO PRODUCE NEAT REMOVAL LINES. COST TO BE INCLUDED IN THE PRICE BID FOR ITEM 582.05M AND 582.07M.
10. FOR JACKING NOTES SEE DWG PR17-1S.

• PERFORM STRUCTURAL LIFTING UNDER ITEM 585.02M - STRUCTURAL LIFTING OPERATIONS - TYPE B (LIFTING AT A PIER) OR ITEM 585.03M - STRUCTURAL LIFTING OPERATIONS - TYPE C (LIFTING AT A PIER WHERE THE CONTRACTOR SHALL BE REQUIRED TO LIFT OFF THE FOOTING AND/OR GROUND LEVEL.

JACKING LOADS:

D.L. = 75 MT
L.L. = 50 MT
TOTAL = 125 MT

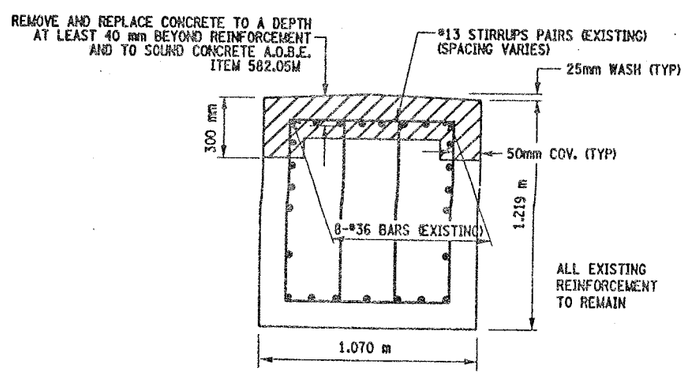

SECTION 00-00
NOT TO SCALE

LEGEND:

ITEM 582.05M - REMOVAL OF STRUCTURAL CONCRETE- REPLACE WITH CLASS A CONCRETE. (CM)

ITEM 582.07M - REMOVAL OF STRUCTURAL CONCRETE - REPLACE WITH VERTICAL OVERHEAD PATCH MATERIAL. (SM)

ALL DIMENSIONS ARE IN mm UNLESS OTHERWISE NOTED

LIST OF ITEMS USED:

ITEM 582.05M - REM. OF STRUC. CONC. - REPLACE WITH CLASS A CONCRETE (CM)
ITEM 582.07M - REM. OF STRUC. CONC. - REPL. W/ VERT. OVERHEAD PATCH MAT'L (SM)
ITEM 585.02M - STRUCTURAL LIFTING OPERATIONS - TYPE B (EA)
ITEM 585.03M - STRUCTURAL LIFTING OPERATION - TYPE C (EA)

AS BUILT REVISIONS

SIGNATURE DATE

INTERSTATE 481 SB
OVER
CSX RAILROAD YARD
PIER 14

STATE OF NEW YORK
DEPARTMENT OF TRANSPORTATION

FILENAME	REGION	DATE	DRAWING NO.
305613AE.P14	3	10/02	PR17-18S

DESIGN SUPERVISOR ____ JOB MANAGER ____ DESIGNED BY ____ CHECKED BY ____ ESTIMATED BY ____ DRAFTED BY ____ CHECKED BY ____

FED ROAD REG. NO.	STATE	CONTRACT NO.	SHEET NO.	TOTAL SHEETS
1	N.Y.	D259214	315	432

BRIDGE REHABILITATION PROJECT (ELEMENT SPECIFIC)
VARIOUS BRIDGES ON INTERSTATE 481
TOWN OF DEWITT AND CICERO
ONONDAGA COUNTY
P.I.N. 305613 B.I.N. 1093572

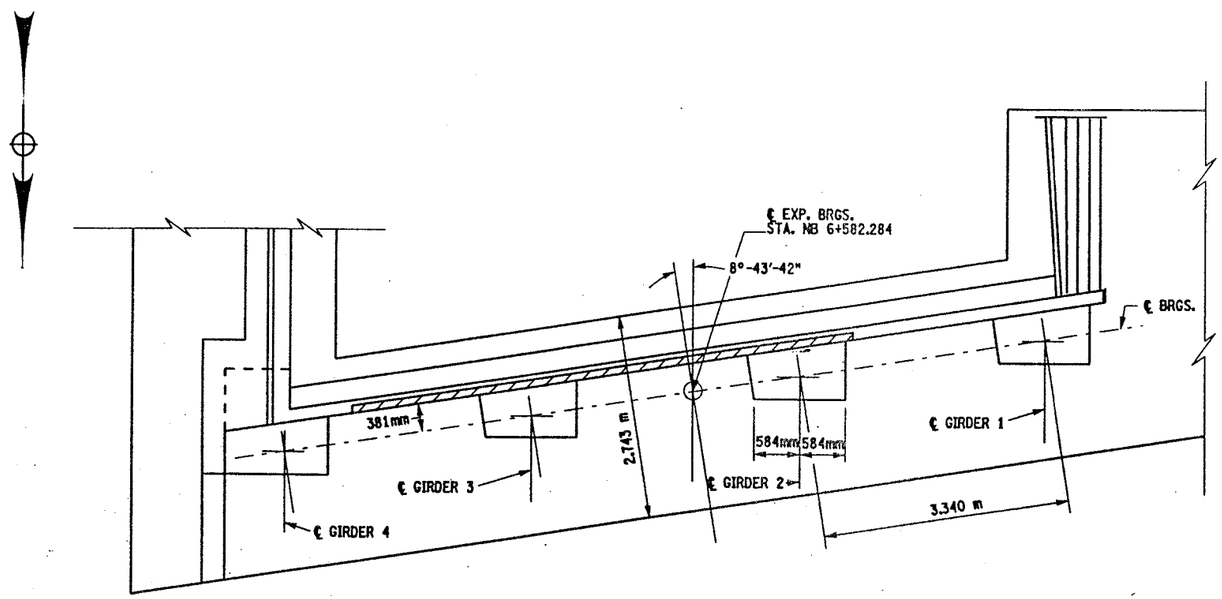

SOUTH ABUTMENT
PLAN

SCALE 1:40

NOTES:

1. ALL DIMENSIONS SHOWN FOR CONCRETE REMOVAL ARE APPROXIMATE AND SHALL BE FIELD VERIFIED BY THE CONTRACTOR AND EIC.
2. REMOVE CONCRETE TO LIMITS SHOWN AS WELL AS TO SOUND CONCRETE, A.O.B.E.
3. WHEN REMOVING EXISTING CONCRETE, SAWCUT 5 mm MIN. TO PRODUCE NEAT REMOVAL LINES. ANY COST TO BE
4. INCLUDED IN THE BID PRICE FOR ITEM 582.05M.
5. ALL EXISTING REINFORCEMENT TO REMAIN.
6. ELEVATIONS ARE GIVEN FOR QUANTITY ESTIMATES ONLY.
7. REFER TO CONTRACT D250094 FOR ORIGINAL CONSTRUCTION DETAILS.

AREAS OF PROPOSED WORK: ITEM 582.05M
REMOVAL OF STRUCTURAL CONCRETE-
REPLACEMENT WITH CLASS A CONCRETE (CM)

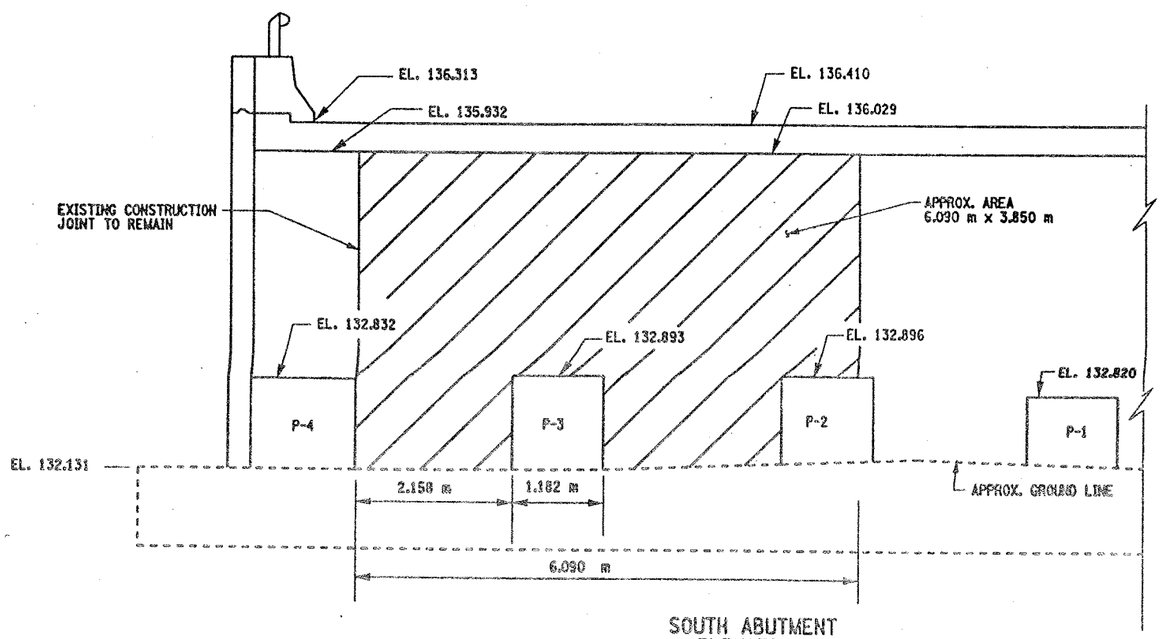

SOUTH ABUTMENT
ELEVATION

SCALE 1:40

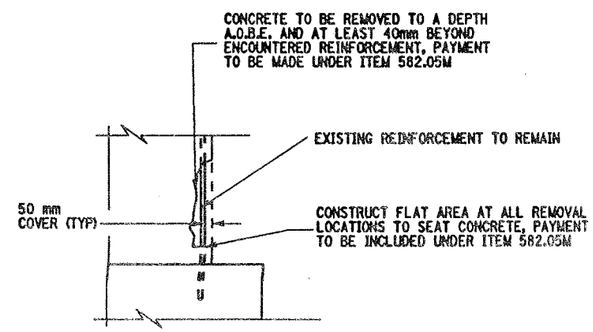

REMOVAL DETAIL
NOT TO SCALE

LIST OF ITEMS USED:

ITEM 582.05M - REMOVE STRUCTURAL CONCRETE WITH CLASS A CONCRETE (CM)

ALL DIMENSIONS ARE IN m UNLESS OTHERWISE NOTED

AS BUILT REVISIONS

SIGNATURE DATE

INTERSTATE 481 NB
OVER
CSX RAILROAD
SOUTH ABUTMENT

STATE OF NEW YORK
DEPARTMENT OF TRANSPORTATION

FILENAME	REGION	DATE	DRAWING NO.
305613AE.A1B	3	10/02	AB17-1

DESIGN SUPERVISOR ____ JOB MANAGER ____ DESIGNED BY ____ CHECKED BY ____ ESTIMATED BY ____ DRAFTED BY ____ CHECKED BY ____

FED ROAD REG. NO.	STATE	CONTRACT NO.	SHEET NO.	TOTAL SHEETS
1	N.Y.	D259214	316	432

BRIDGE REHABILITATION PROJECT (ELEMENT SPECIFIC)
VARIOUS BRIDGES ON INTERSTATE 481
TOWNS OF DEWITT AND CICERO
ONONDAGA COUNTY
P.I.N. 305613 B.I.N. 1093572

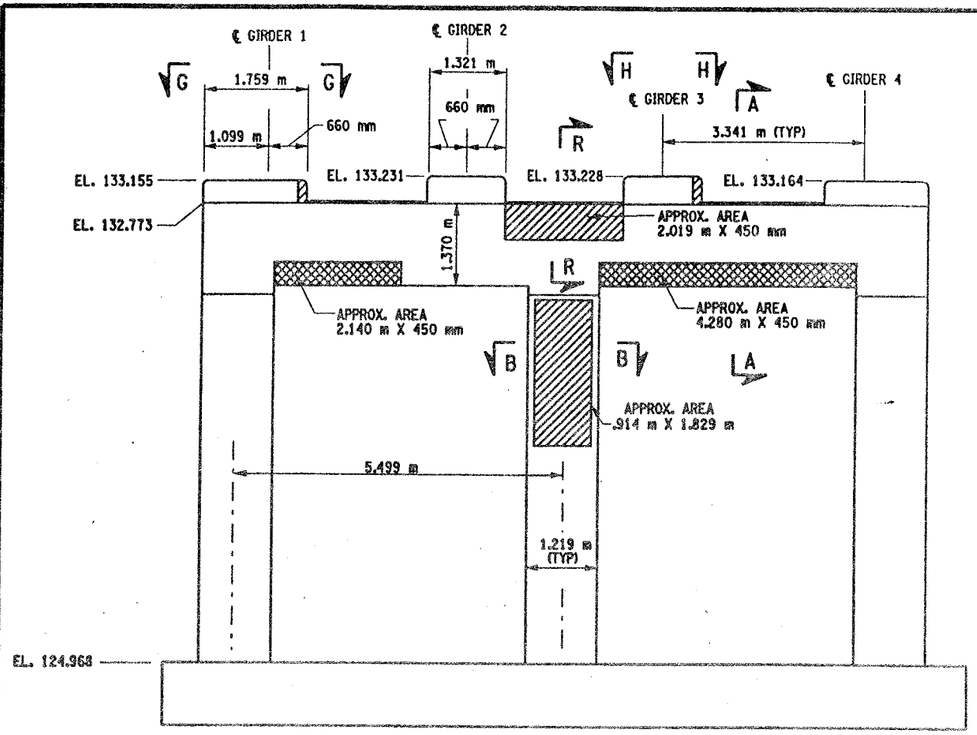

PIER 1 - FRONT FACE (LOOKING NORTH)
BIN 1093572
SCALE: 1 TO 50

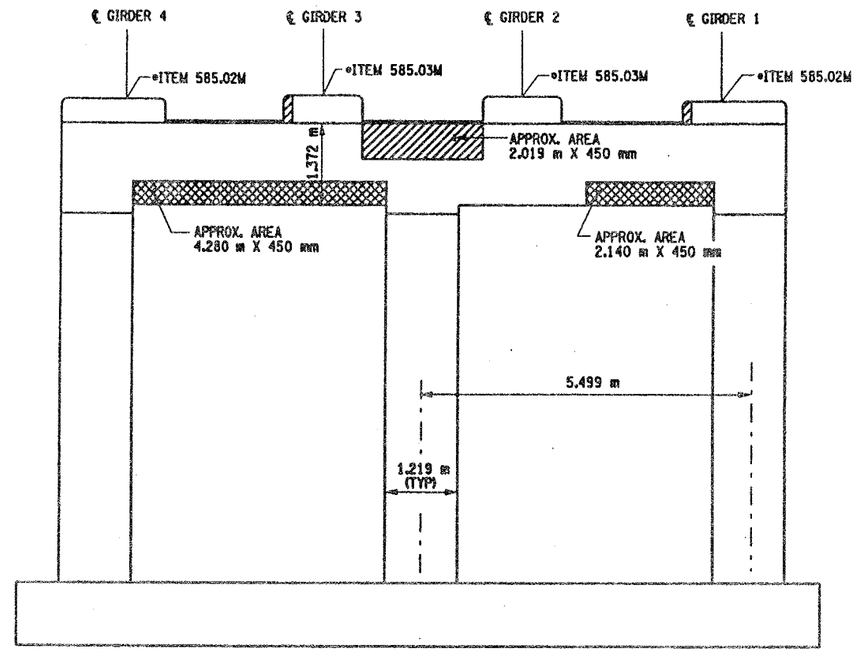

PIER 1- BACK FACE (LOOKING SOUTH)
BIN 1093572
SCALE: 1 TO 50

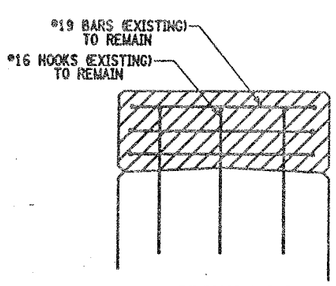

SECTION I-I
NOT TO SCALE

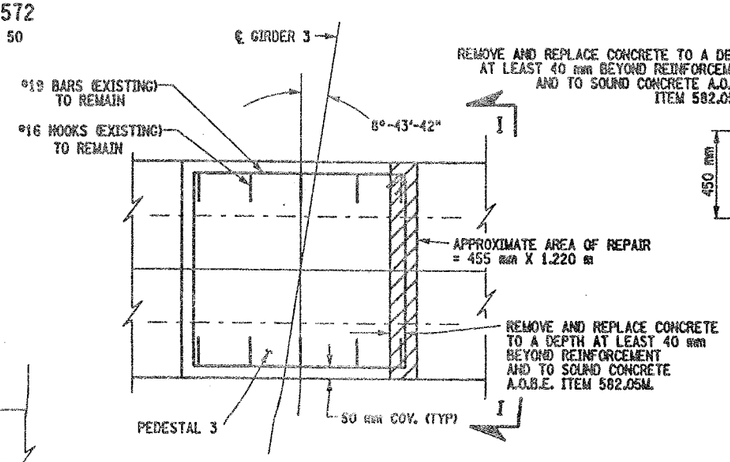

SECTION H-H
NOT TO SCALE

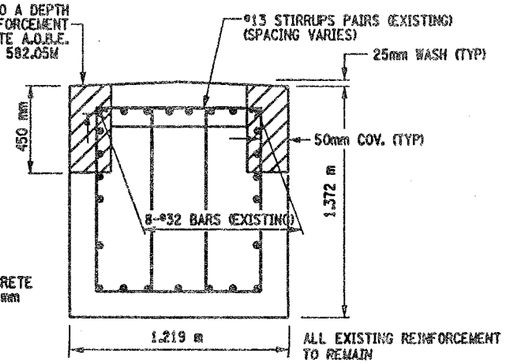

SECTION R-R
NOT TO SCALE

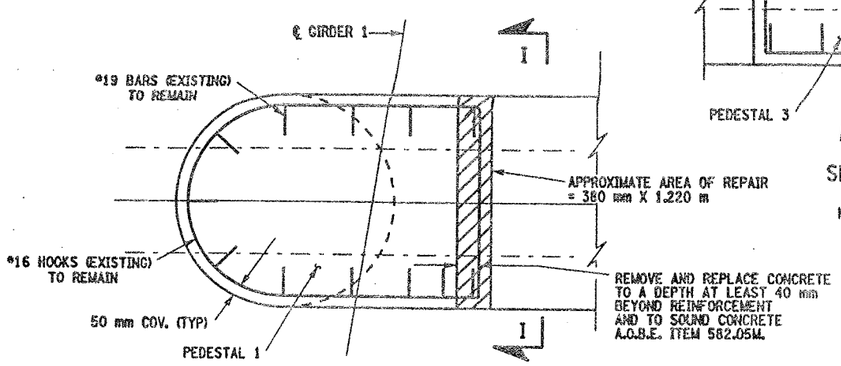

SECTION G-G
NOT TO SCALE

NOTES:

1. ALL REINFORCEMENT TO REMAIN.
2. RESTORE TO ORIGINAL DIMENSIONS.
3. PEDESTALS NUMERICALLY NUMBERED FROM WEST TO EAST.
4. FOR THE CONCRETE REPAIR AREAS, THE CONCRETE SHALL BE REMOVED TO AT LEAST 40mm MIN. BEYOND THE ENCOUNTERED REINFORCEMENT AND TO SOUND CONCRETE, A.O.B.E.
5. ELEVATIONS SHOWN ARE FROM ORIGINAL CONTRACT PLANS F.I.S.H. 70-7 AND ARE FOR REFERENCE ONLY.
6. REMOVAL DIMENSIONS SHOWN ON PLANS ARE ESTIMATED AND SHALL BE FIELD VERIFIED BY THE CONTRACTOR PRIOR TO BEGINNING OF REMOVAL OPERATIONS A.O.B.E.
7. PERFORM BEARING RESTORATION TO ALL EXPANSION BEARINGS (TO INCLUDE RESETTING OF UNDEREXTENDED OR OVEREXTENDED BEARINGS). SEE DWG. BR-10 & BR-11 FOR BEARING RESTORATION DETAILS. SEE DWG. PR17-1S FOR BEARING RESTORATION NOTES.
8. FOR SECTION A-A AND B-B SEE DWG. PR17-2S.
9. ALL CONCRETE REMOVAL SHALL BE SAWCUT TO PRODUCE NEAT REMOVAL LINES. COST TO BE INCLUDED IN THE PRICE BID FOR ITEM 582.05M AND ITEM 582.07M
10. CONTRACTOR SHALL REMOVE DEBRIS FROM TOP OF PEDESTALS AND TOP OF CAP BEAM. COST TO BE INCLUDED IN THE PRICE BID FOR VARIOUS OTHER ITEMS OF CONTRACT.
11. FOR JACKING NOTES SEE DWG. PR17-1S.

• PERFORM STRUCTURAL LIFTING UNDER ITEM 585.02M - STRUCTURAL LIFTING OPERATIONS - TYPE B (LIFTING AT A PIER) OR ITEM 585.03M - STRUCTURAL LIFTING OPERATIONS - TYPE C (LIFTING AT A PIER WHERE THE CONTRACTOR SHALL BE REQUIRED TO LIFT OFF THE FOOTING AND/OR GROUND LEVEL.

JACKING LOADS:

D.L. = 75 MT
L.L. = 50 MT
TOTAL = 125 MT

LEGEND:

ITEM 582.05M - REMOVAL OF STRUCTURAL CONCRETE- REPLACE WITH CLASS A CONCRETE (CM)

ITEM 582.07M - REMOVAL OF STRUCTURAL CONCRETE - REPLACE WITH VERTICAL OVER-HEAD PATCH MATERIAL. (SM)

ALL DIMENSIONS ARE IN mm UNLESS OTHERWISE NOTED

LIST OF ITEMS USED:

ITEM 15565.4302 - BRIDGE BEARING RESTORATION
ITEM 582.05M - REM. OF STRUC. CONC. - REPLACE WITH CLASS A CONCRETE (CM)
ITEM 582.07M - REM. OF STRUC. CONC. - REPL. W/ VERT. OVERHEAD PATCH MAT'L. (SM)
ITEM 585.02M - STRUCTURAL LIFTING OPERATIONS - TYPE B (EA)
ITEM 585.03M - STRUCTURAL LIFTING OPERATION - TYPE C (EA)

AS BUILT REVISIONS

SIGNATURE DATE

INTERSTATE 481 NB
OVER
CSX RAILROAD YARD
PIER 1

STATE OF NEW YORK
DEPARTMENT OF TRANSPORTATION

FILENAME	REGION	DATE	DRAWING NO.
305613AE.P1A	3	10/02	PR17-1N

DESIGN SUPERVISOR ____ JOB MANAGER ____ DESIGNED BY ____ CHECKED BY ____ ESTIMATED BY ____ DRAFTED BY ____ CHECKED BY ____

FED ROAD REG. NO.	STATE	CONTRACT NO.	SHEET NO.	TOTAL SHEETS
1	N.Y.	D259214	317	432

BRIDGE REHABILITAITON PROJECT (ELEMENT SPECIFIC)
VARIOUS BRIDGES ON INTERSTATE 481
TOWNS OF DEWITT AND CICERO
ONONDAGA COUNTY
P.I.N. 305613 B.I.N. 1093572

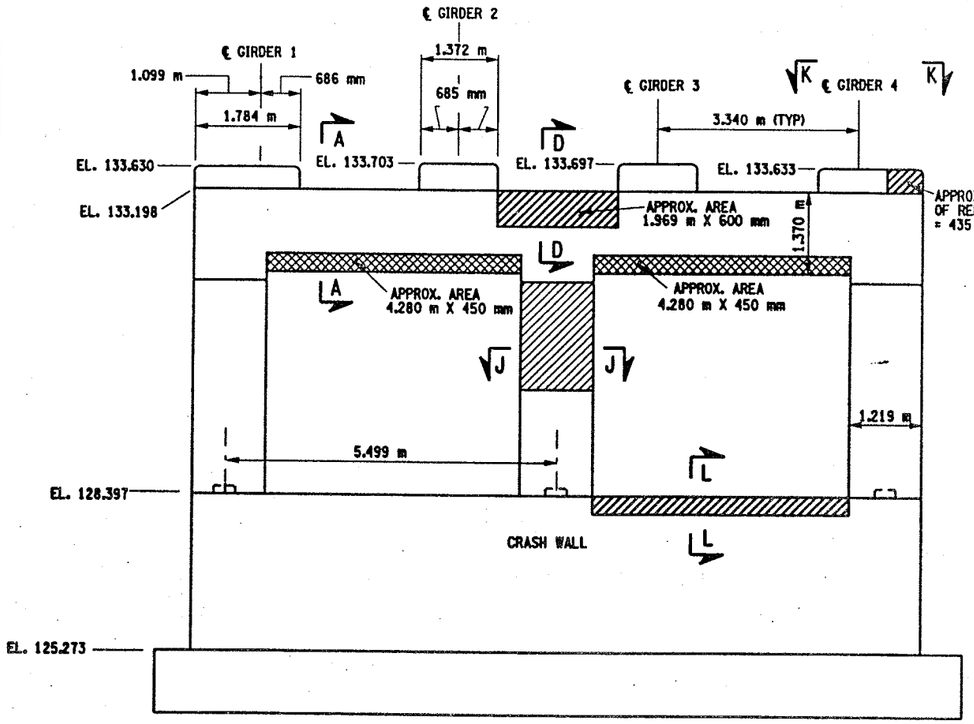

PIER 2 - FRONT FACE (LOOKING NORTH)
BIN 1093572
SCALE: 1 TO 50

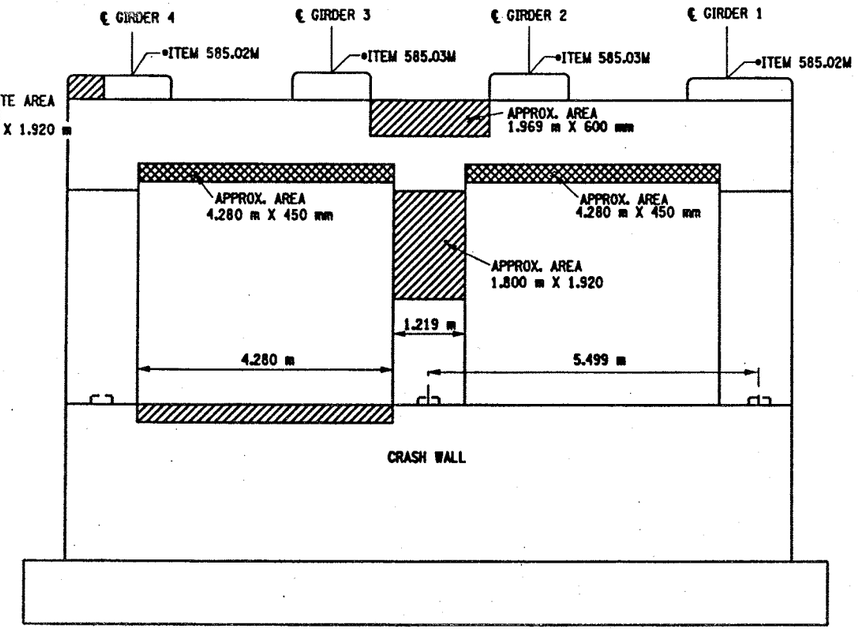

PIER 2- BACK FACE (LOOKING SOUTH)
BIN 1093572
SCALE: 1 TO 50

NOTES:

1. ALL REINFORCEMENT TO REMAIN.
2. RESTORE TO ORIGINAL DIMENSIONS.
3. PEDESTALS NUMERICALLY NUMBERED FROM WEST TO EAST.
4. FOR THE CONCRETE REPAIR AREAS, THE CONCRETE SHALL BE REMOVED TO AT LEAST 40mm MIN. BEYOND THE ENCOUNTERED REINFORCEMENT AND TO SOUND CONCRETE, A.O.B.E.
5. ELEVATIONS SHOWN ARE FROM ORIGINAL CONTRACT PLANS F.I.S.H. 70-7 AND ARE FOR REFERENCE ONLY.
6. REMOVAL DIMENSIONS SHOWN ON PLANS ARE ESTIMATED AND SHALL BE FIELD VERIFIED BY THE CONTRACTOR PRIOR TO BEGINNING OF REMOVAL OPERATIONS A.O.B.E.
7. PERFORM BEARING RESTORATION TO ALL EXPANSION BEARINGS (TO INCLUDE RESETTING OF UNDEREXTENDED OR OVEREXTENDED BEARINGS). SEE DWG. BR-10 & BR-11 FOR BEARING RESTORATION DETAILS. SEE DWG PR17-1S FOR BEARING RESTORATION NOTES.
8. SEE DWG. PR17-2S FOR SECTION A-A, D-D AND DETAIL "A".
9. ALL CONCRETE REMOVAL SHALL BE SAWCUT TO PRODUCE NEAT REMOVAL LINES. COST TO BE INCLUDED IN THE PROCE BID FOR ITEM 582.05M AND ITEM 582.07M.
10. FOR JACKING NOTES SEE DWG. PR17-1S
11. CONTRACTOR SHALL REMOVE DEBRIS FROM TOP OF PEDESTALS AND TOP OF CAP BEAM. COST TO BE INCLUDED IN THE PRICE BID FOR VARIOUS OTHER ITEMS OF CONTRACT.

• PERFORM STRUCTURAL LIFTING UNDER ITEM 585.02M - STRUCTURAL LIFTING OPERATIONS - TYPE B (LIFTING AT A PIER) OR ITEM 585.03M - STRUCTURAL LIFTING OPERATIONS - TYPE C (LIFTING AT A PIER WHERE THE CONTRACTOR SHALL BE REQUIRED TO LIFT OFF THE FOOTING AND/OR GROUND LEVEL.

JACKING LOADS:

D.L. = 75 MT
L.L. = 50 MT
TOTAL = 125 MT

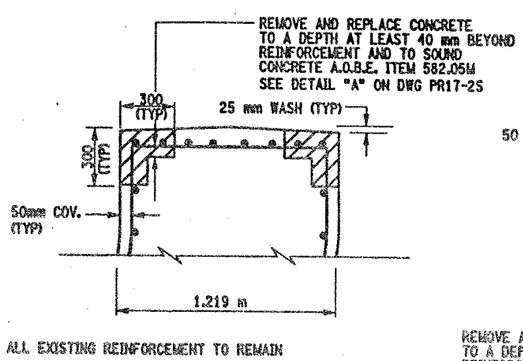

SECTION L-L
NOT TO SCALE

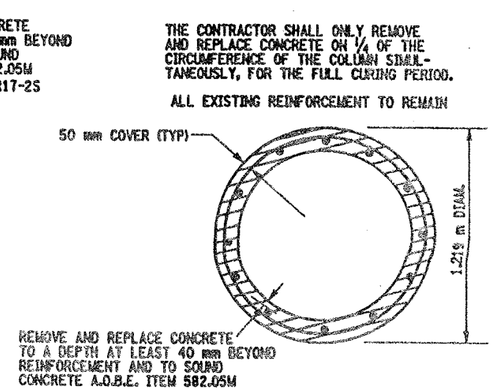

SECTION J-J
NOT TO SCALE

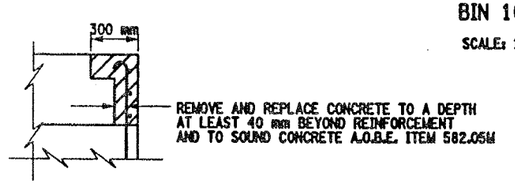

SECTION M-M
NOT TO SCALE

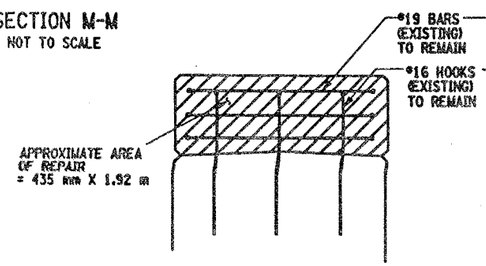

SECTION N-N
NOT TO SCALE

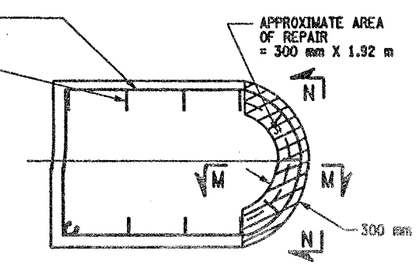

SECTION K-K
NOT TO SCALE

LEGEND:

ITEM 582.05M - REMOVAL OF STRUCTURAL CONCRETE- REPLACE WITH CLASS A CONCRETE (CM)

ITEM 582.07M - REMOVAL OF STRUCTURAL CONCRETE - REPLACE WITH VERTICAL OVER-HEAD PATCH MATERIAL. (SM)

LIST OF ITEMS USED:

ITEM 15565.4302M - BRIDGE BEARING RESTORATION (EA)
ITEM 582.05M - REM. OF STRUC. CONC. - REPLACE WITH CLASS A CONCRETE (CM)
ITEM 582.07M - REM. OF STRUC. CONC. - REPL. W/ VERT. OVERHEAD PATCH MAT.L (SM)
ITEM 585.02M - STRUCTURAL LIFTING OPERATIONS - TYPE B (EA)
ITEM 585.03M - STRUCTURAL LIFTING OPERATION - TYPE C (EA)

ALL DIMENSIONS ARE IN mm UNLESS OTHERWISE NOTED

AS BUILT REVISIONS

SIGNATURE DATE

INTERSTATE 481 NB
OVER
CSX RAILROAD YARD
PIER 2

STATE OF NEW YORK
DEPARTMENT OF TRANSPORTATION

FILENAME	REGION	DATE	DRAWING NO.
305613AE.P2A	3	10/02	PR17-2N

DESIGN SUPERVISOR ____ JOB MANAGER ____ DESIGNED BY ____ CHECKED BY ____ ESTIMATED BY ____ DRAFTED BY ____ CHECKED BY ____

FED ROAD REG. NO.	STATE	CONTRACT NO.	SHEET NO.	TOTAL SHEETS
1	N.Y.	D259214	318	432

BRIDGE REHABILITATION PROJECT (ELEMENT SPECIFIC)
VARIOUS BRIDGES ON INTERSTATE 481
TOWNS OF DEWITT AND CICERO
ONONDAGA COUNTY
P.I.N. 305613 B.I.N. 1093572

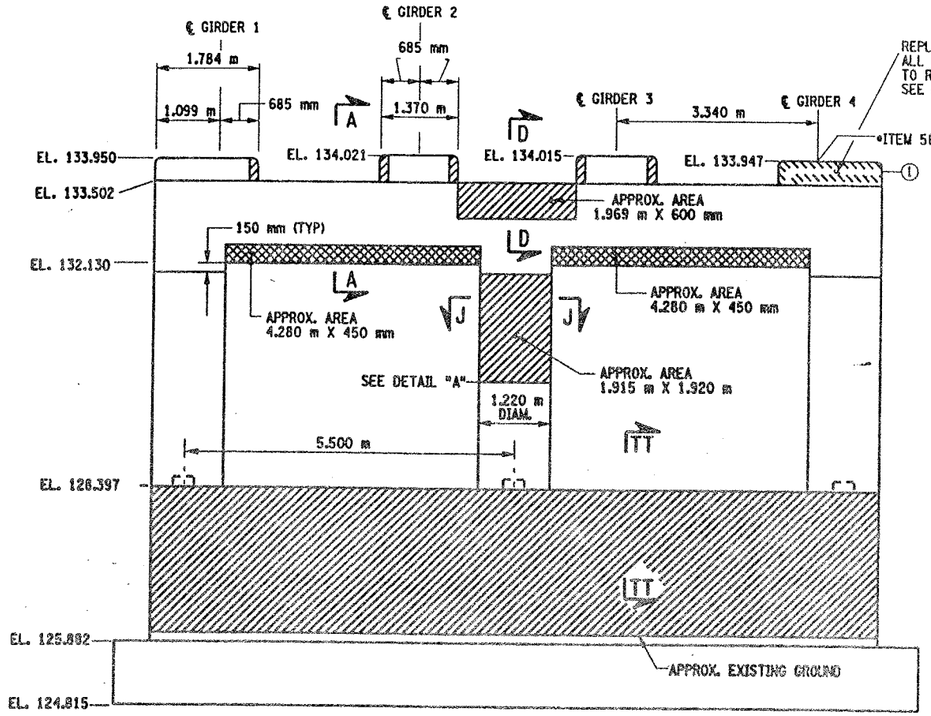

PIER 3 - FRONT FACE (LOOKING NORTH)
BIN 1093572
SCALE: 1 TO 50

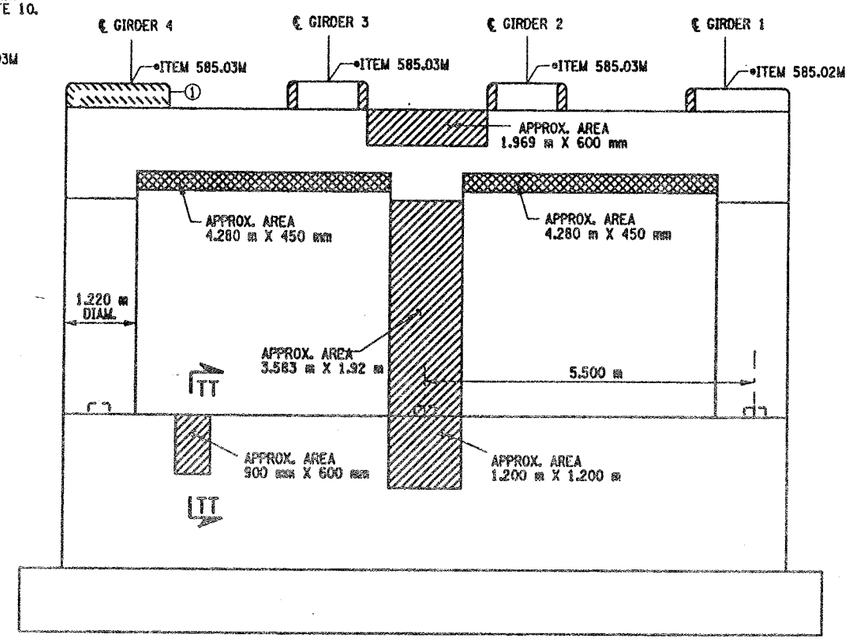

PIER 3 - BACK FACE (LOOKING SOUTH)
BIN 1093572
SCALE: 1 TO 50

○— INDICATES CONCRETE PLACEMENT NUMBER

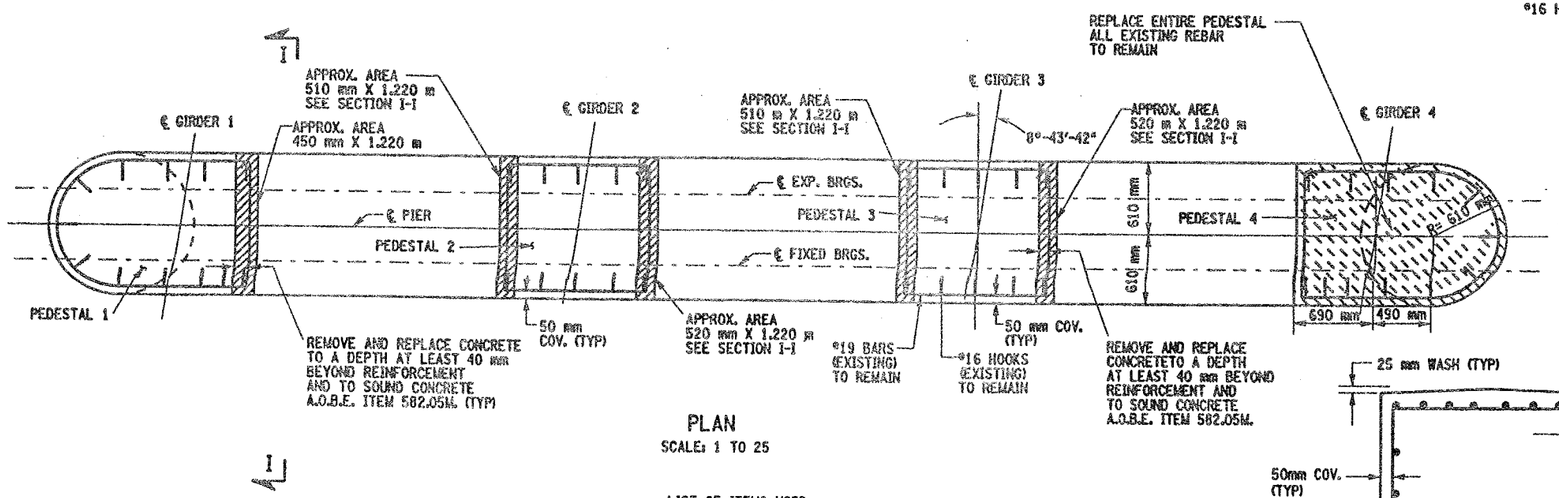

PLAN
SCALE: 1 TO 25

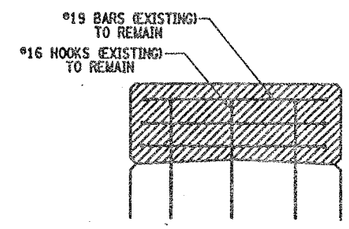

SECTION I-I
NOT TO SCALE

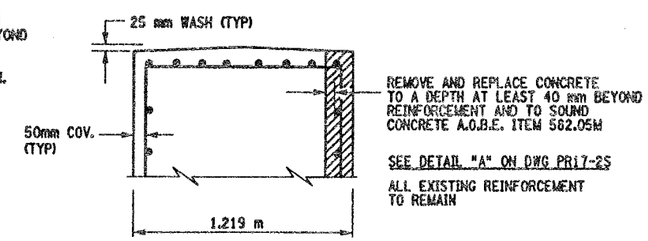

SECTION TT-TT
NOT TO SCALE

CONCRETE TABLE (m³)		
PLACEMENT	QUANTITY	ITEM NO.
1	0.90	555.0105M

LIST OF ITEMS USED:

ITEM 15565.4302M - BRIDGE BEARING RESTORATION (EA)
ITEM 555.0105M - CONCRETE FOR STRUCTURES CLASS A (CM)
ITEM 580.01M - REMOVAL OF STRUCTURAL CONCRETE (CM)
ITEM 582.05M - REM. OF STRUC. CONC. - REPLACE WITH CLASS A CONCRETE (CM)
ITEM 582.07M - REM. OF STRUC. CONC. - REPL. W/ VERT. OVERHEAD PATCH MAT.L (SM)
ITEM 585.02M - STRUCTURAL LIFTING OPERATIONS - TYPE B (EA)
ITEM 585.03M - STRUCTURAL LIFTING OPERATION - TYPE C (EA)

NOTES:

1. ALL REINFORCEMENT TO REMAIN.
2. RESTORE TO ORIGINAL DIMENSIONS.
3. PEDESTALS NUMERICALLY NUMBERED FROM WEST TO EAST.
4. FOR THE CONCRETE REPAIR AREAS, THE CONCRETE SHALL BE REMOVED TO AT LEAST 40mm MIN. BEYOND THE ENCOUNTERED REINFORCEMENT AND TO SOUND CONCRETE, A.O.B.E.
5. ELEVATIONS SHOWN ARE FROM ORIGINAL CONTRACT PLANS F.I.S.H. 70-7 AND ARE FOR REFERENCE ONLY.
6. REMOVAL DIMENSIONS SHOWN ON PLANS ARE ESTIMATED AND SHALL BE FIELD VERIFIED BY THE CONTRACTOR PRIOR TO BEGINNING OF REMOVAL OPERATIONS A.O.B.E.
7. PERFORM BEARING RESTORATION TO ALL EXPANSION BEARINGS (TO INCLUDE RESETTING OF UNDEREXTENDED OR OVEREXTENDED BEARINGS). SEE DWG BR-10 & BR-11 FOR BEARING RESTORATION DETAILS. SEE DWG. PR17-1S FOR BEARING RESTORATION NOTES.
8. SEE DWG. PR17-2S FOR SECTIONS A-A, D-D AND DETAIL "A"
9. SEE DWG. PR17-2N FOR SECTION J-J
10. PEDESTAL 4 SHALL BE REPLACED TO EXISTING DIMENSIONS. ITEM 555.0105 M
11. ALL CONCRETE REMOVAL SHALL BE SAWCUT TO PRODUCE NEAT REMOVAL LINES. COST TO BE INCLUDED IN THE PRICE BID FOR ITEM 582.05M AND ITEM 582.07M.
12. FOR JACKING NOTES SEE DWG. PR17-1S
13. CONTRACTOR SHALL REMOVE DEBRIS FROM TOP OF PEDESTALS AND TOP OF CAPBEAM. COST TO BE INCLUDED IN THE PRICE BID FOR VARIOUS OTHER ITEMS OF CONTRACT.

• PERFORM STRUCTURAL LIFTING UNDER ITEM 585.02M - STRUCTURAL LIFTING OPERATIONS - TYPE B (LIFTING AT A PIER) OR ITEM 585.03M - STRUCTURAL LIFTING OPERATIONS - TYPE C (LIFTING AT A PIER WHERE THE CONTRACTOR SHALL BE REQUIRED TO LIFT OFF THE FOOTING AND/OR GROUND LEVEL.

JACKING LOADS:

D.L. = 100 MT
L.L. = 50 MT
TOTAL = 150 MT

LEGEND:

ITEM 582.05M - REMOVAL OF STRUCTURAL CONCRETE- REPLACE WITH CLASS A CONCRETE (CM)

ITEM 582.07M - REMOVAL OF STRUCTURAL CONCRETE - REPLACE WITH VERTICAL OVER-HEAD PATCH MATERIAL. (SM)

ITEM 580.01 M - REMOVAL OF STRUCTURAL CONCRETE. (CM) AND ITEM 555.0105 M - CONCRETE FOR STRUCTURES CLASS A. (CM)

ALL DIMENSIONS ARE IN mm UNLESS OTHERWISE NOTED

AS BUILT REVISIONS

SIGNATURE DATE

INTERSTATE 401 NB
OVER
CSX RAILROAD YARD
PIER 3

STATE OF NEW YORK
DEPARTMENT OF TRANSPORTATION

FILENAME	REGION	DATE	DRAWING NO.
305613AE.P3A	3	10/02	PR17-3N

DESIGN SUPERVISOR ____ JOB MANAGER ____ DESIGNED BY ____ CHECKED BY ____ ESTIMATED BY ____ DRAFTED BY ____ CHECKED BY ____

FED ROAD REG. NO.	STATE	CONTRACT NO.	SHEET NO.	TOTAL SHEETS
1	N.Y.	D259214	319	432

BRIDGE REHABILITATION PROJECT (ELEMENT SPECIFIC)
VARIOUS BRIDGES ON INTERSTATE 481
TOWNS OF DEWITT AND CICERO
ONONDAGA COUNTY
P.I.N. 305613 B.I.N. 1093572

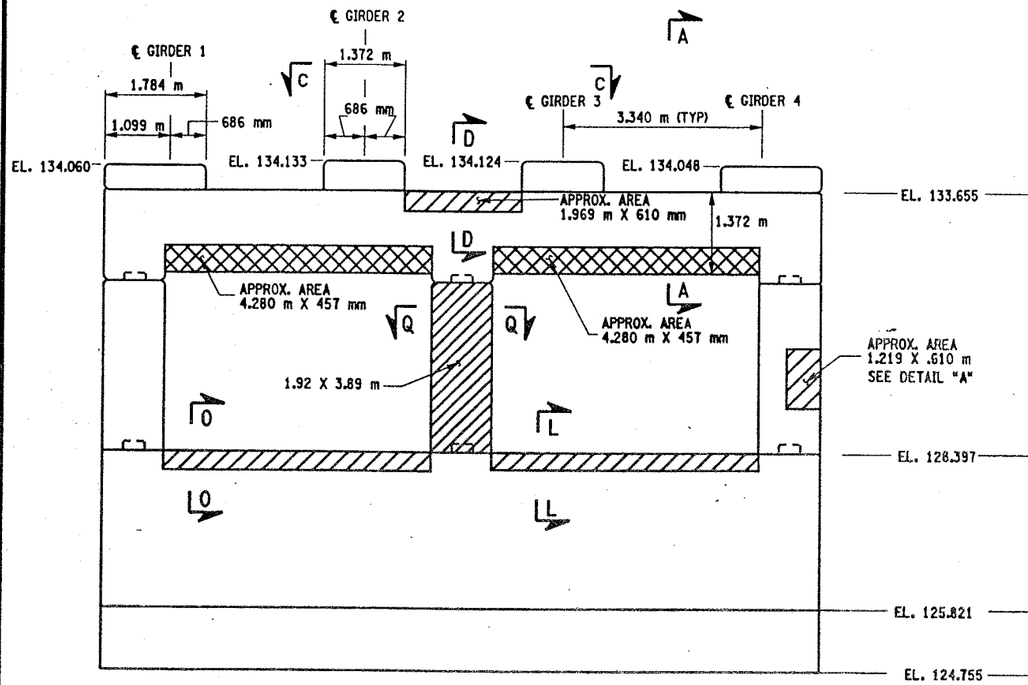

PIER 4 - FRONT FACE (LOOKING NORTH)
BIN 1093572
SCALE: 1 TO 50

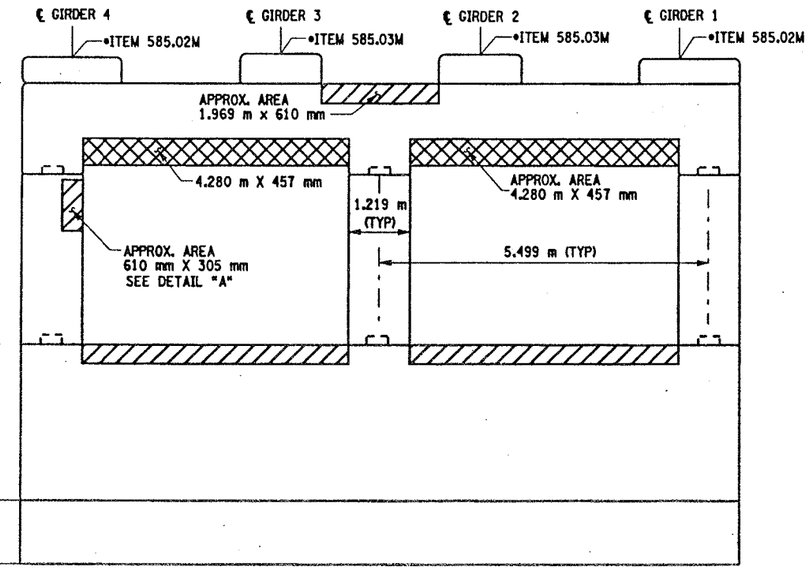

PIER 4 - BACK FACE (LOOKING SOUTH)
BIN 1093572
SCALE: 1 TO 50

NOTES:

1. ALL REINFORCEMENT TO REMAIN.
2. RESTORE TO ORIGINAL DIMENSIONS.
3. PEDESTALS NUMERICALLY NUMBERED FROM WEST TO EAST.
4. FOR THE CONCRETE REPAIR AREAS, THE CONCRETE SHALL BE REMOVED TO AT LEAST 40mm MIN. BEYOND THE ENCOUNTERED REINFORCEMENT AND TO SOUND CONCRETE, A.O.B.E.
5. ELEVATIONS SHOWN ARE FROM ORIGINAL CONTRACT PLANS F.I.S.H. 70-7 AND ARE FOR REFERENCE ONLY.
6. REMOVAL DIMENSIONS SHOWN ON PLANS ARE ESTIMATED AND SHALL BE FIELD VERIFIED BY THE CONTRACTOR AND ENGINEER PRIOR TO BEGINNING OF REMOVAL OPERATIONS A.O.B.E.
7. PERFORM BEARING RESTORATION TO ALL EXPANSION BEARINGS (TO INCLUDE RESETTING OF UNDEREXTENDED OR OVEREXTENDED BEARINGS). SEE DWG. BR-10 AND BR-11 FOR BEARING RESTORATION DETAILS. SEE DWG. PR17-1S FOR BEARING RESTORATION NOTES.
8. SEE DWG. PR17-2S FOR SECTIONS A-A, D-D AND DETAIL "A".
9. SEE DWG. PR17-4S FOR SECTION O-O.
10. SEE DWG. PR17-2N FOR SECTION L-L.
11. ALL CONCRETE REMOVAL SHALL BE SAWCUT TO PRODUCE NEAT REMOVAL LILNES. COST TO BE INCLUDED IN THE PRICE BID FOR ITEM 582.05M AND ITEM 582.07M.
12. FOR JACKING NOTES SEE DWG PR17-1S.
13. CONTRACTOR SHALL REMOVE DEBRIS FROM TOP OF PEDESTALS AND TOP OF CAP BEAM. COST TO BE INCLUDED IN THE PRICE BID FOR VARIOUS OTHER ITEMS OF CONTRACT.

• PERFORM STRUCTURAL LIFTING UNDER ITEM 585.02M - STRUCTURAL LIFTING OPERATIONS - TYPE B (LIFTING AT A PIER) OR ITEM 585.03M - STRUCTURAL LIFTING OPERATIONS - TYPE C (LIFTING AT A PIER WHERE THE CONTRACTOR SHALL BE REQUIRED TO LIFT OFF THE FOOTING AND/OR GROUND LEVEL.

JACKING LOADS:

D.L. = 100 MT
L.L. = 50 MT
TOTAL = 150 MT

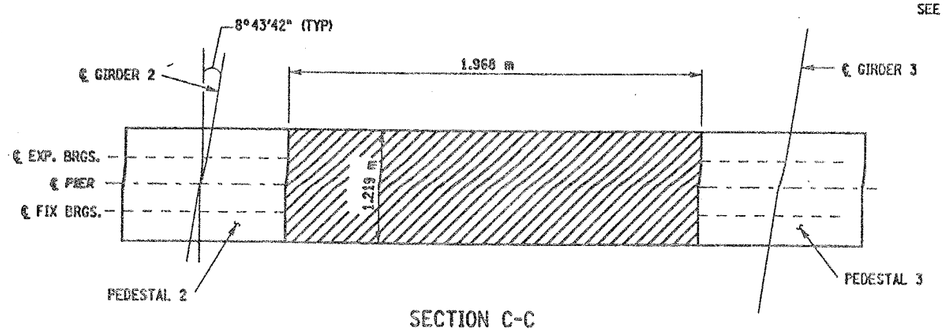

SECTION C-C
NOT TO SCALE

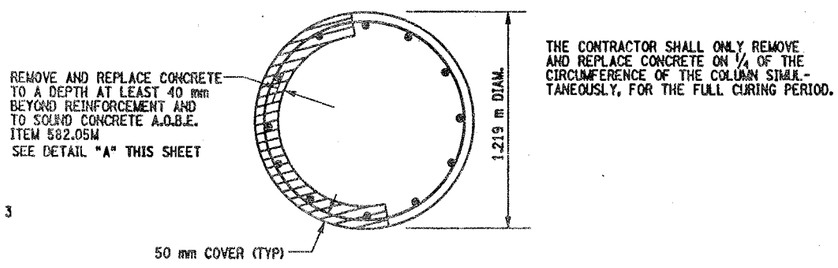

THE CONTRACTOR SHALL ONLY REMOVE AND REPLACE CONCRETE ON 1/4 OF THE CIRCUMFERENCE OF THE COLUMN SIMULTANEOUSLY, FOR THE FULL CURING PERIOD.

SECTION Q-Q
NOT TO SCALE

LEGEND:

ITEM 582.05M - REMOVAL OF STRUCTURAL CONC. REPLACE WITH CLASS A CONCRETE (CM)

ITEM 582.07M - REMOVAL OF STRUCTURAL CONCRETE - REPLACE WITH VERTICAL OVERHEAD PATCH MATERIAL. (SM)

ALL DIMENSIONS ARE IN mm UNLESS OTHERWISE NOTED

LIST OF ITEMS USED:

ITEM 15565.4302M - BRIDGE BEARING RESTORATION (EA)
ITEM 582.05M - REM. OF STRUC. CONC. - REPLACE WITH CLASS A CONCRETE (CM)
ITEM 582.07M - REM. OF STRUC. CONC. - REPL. W/VERT. OVERHEAD PATCH MAT.L (SM)
ITEM 585.02M - STRUCTURAL LIFTING OPERATIONS - TYPE B (EA)
ITEM 585.03M - STRUCTURAL LIFTING OPERATION - TYPE C (EA)

AS BUILT REVISIONS

SIGNATURE DATE

INTERSTATE 481 NB
OVER
CSX RAILROAD
PIER 4

STATE OF NEW YORK
DEPARTMENT OF TRANSPORTATION

FILENAME	REGION	DATE	DRAWING NO.
305613AE.P4A	3	10/02	PR17-4N

DESIGN SUPERVISOR ____ JOB MANAGER ____ DESIGNED BY ____ CHECKED BY ____ ESTIMATED BY ____ DRAFTED BY ____ CHECKED BY ____

FED ROAD REG. NO.	STATE	CONTRACT NO.	SHEET NO.	TOTAL SHEETS
1	N.Y.	D259214	320	432

BRIDGE REHABILITATION PROJECT (ELEMENT SPECIFIC)
VARIOUS BRIDGES ON INTERSTATE 481
TOWNS OF DEWITT AND CICERO
ONONDAGA COUNTY
P.I.N. 305613 | B.I.N. 1093572

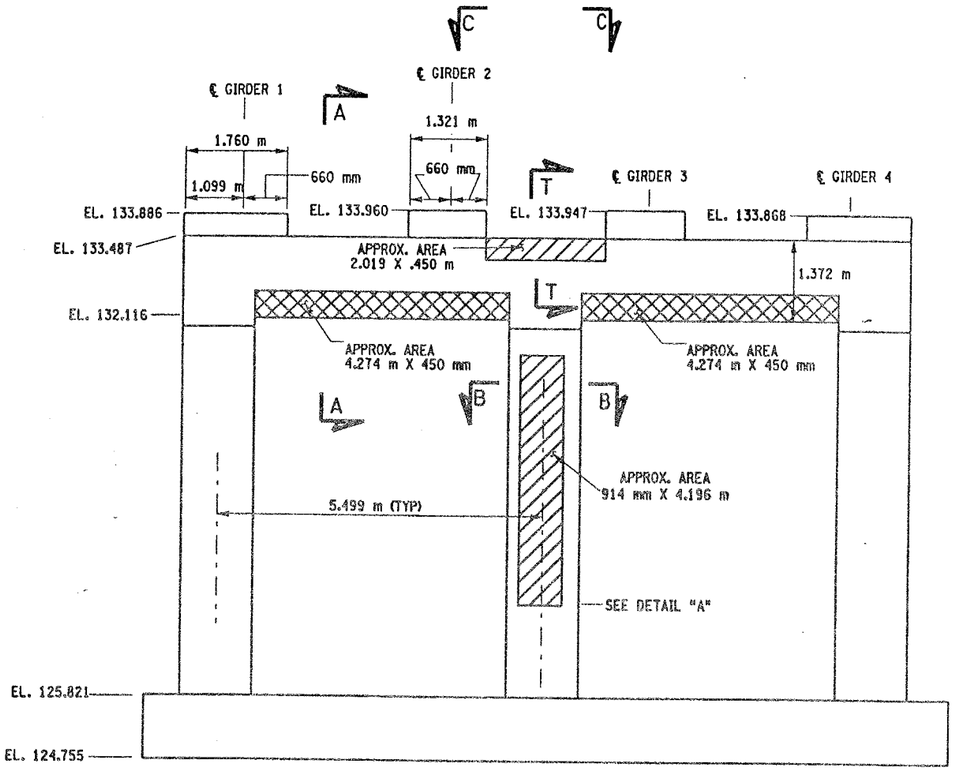

PIER 5 - FRONT FACE (LOOKING NORTH)
BIN 1093572
SCALE: 1 TO 50

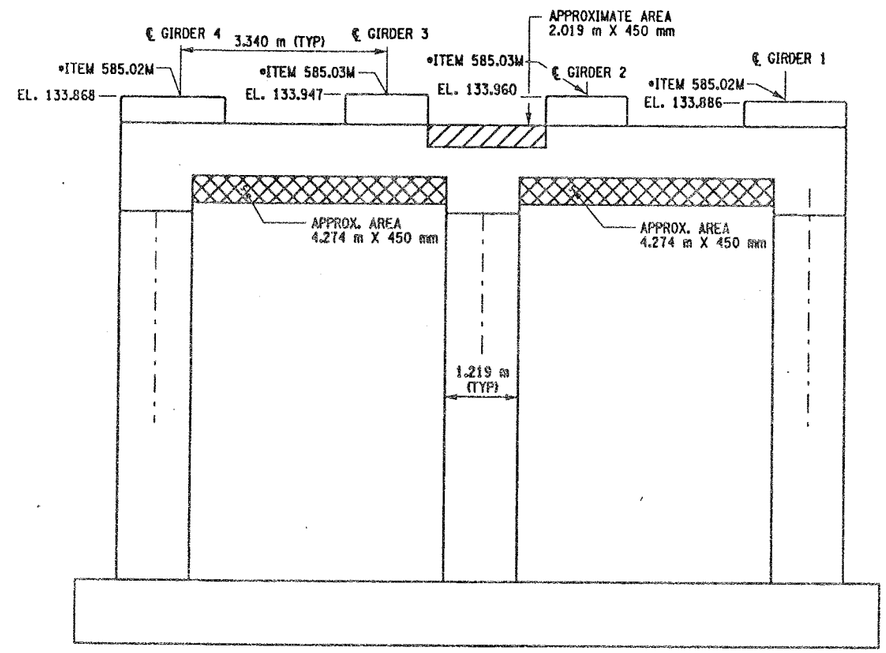

PIER 5 - BACK FACE (LOOKING SOUTH)
BIN 1093572
SCALE: 1 TO 50

NOTES:

1. ALL REINFORCEMENT TO REMAIN.
2. RESTORE TO ORIGINAL DIMENSIONS.
3. PEDESTALS NUMERICALLY NUMBERED FROM WEST TO EAST.
4. FOR THE CONCRETE REPAIR AREAS, THE CONCRETE SHALL BE REMOVED TO AT LEAST 40mm MIN. BEYOND THE ENCOUNTERED REINFORCEMENT AND TO SOUND CONCRETE, A.O.B.E.
5. ELEVATIONS SHOWN ARE FROM ORIGINAL CONTRACT PLANS F.I.S.H. 70-7 AND ARE FOR REFERENCE ONLY.
6. REMOVAL DIMENSIONS SHOWN ON PLANS ARE ESTIMATED AND SHALL BE FIELD VERIFIED BY THE CONTRACTOR AND ENGINEER PRIOR TO BEGINNING OF REMOVAL OPERATIONS A.O.B.E.
7. PERFORM BEARING RESTORATION TO ALL EXPANSION BEARINGS (TO INCLUDE RESETTING OF UNDEREXTENDED OR OVEREXTENDED BEARINGS). SEE DWG. BR-10 & BR-11 FOR BEARING RESTORATION DETAILS. SEE DWG. PR17-1S FOR BEARING RESTORATION NOTES.
8. SEE DWG. PR17-2S FOR SECTION A-A AND B-B AND DETAIL "A".
9. SEE DWG PR17-1S FOR SECTION C-C.
10. ALL CONCRET REMOVAL SHALL BE SAWCUT TO PRODUCE NEAT REMOVAL LINES. COST TO BE INCLUDED IN THE PRICE BID FOR ITEM 582.05M AND ITEM 582.07M.
11. FOR JACKING NOTES SEE DWG. PR17-1S.
12. CONTRACTOR SHALL REMOVE DEBRIS FROM TOP OF CAP BEAM. COST TO BE INCLUDED IN THE PRICE BID FOR VARIOUS ITEMS OF CONTRACT.

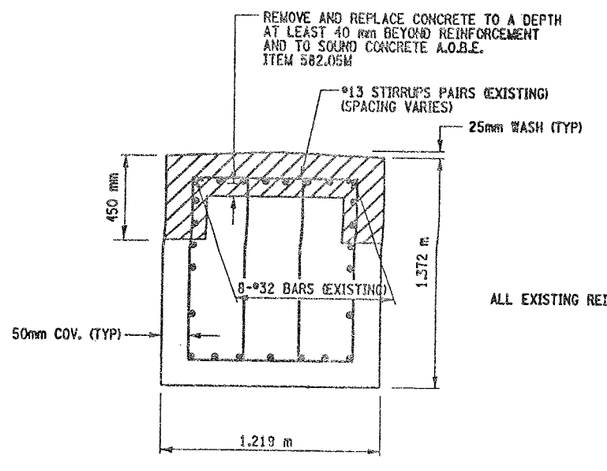

SECTION T-T
NOT TO SCALE

ALL EXISTING REINFORCEMENT TO REMAIN

• PERFORM STRUCTURAL LIFTING UNDER ITEM 585.02M - STRUCTURAL LIFTING OPERATIONS - TYPE B (LIFTING AT A PIER) OR ITEM 585.03M - STRUCTURAL LIFTING OPERATIONS - TYPE C (LIFTING AT A PIER WHERE THE CONTRACTOR SHALL BE REQUIRED TO LIFT OFF THE FOOTING AND/OR GROUND LEVEL.

JACKING LOADS:

D.L. = 100 MT
L.L. = 50 MT
TOTAL = 150 MT

LIST OF ITEMS USED:
ITEM 15565.4302M - BRIDGE BEARING RESTORATION (EA)
ITEM 582.05M - REM. OF STRUC. CONC. - REPLACE WITH CLASS A CONCRETE (CM)
ITEM 582.07M - REM. OF STRUC. CONC. - REPL. W/ VERT. OVERHEAD PATCH MAT'L (SM)
ITEM 585.02M - STRUCTURAL LIFTING OPERATIONS - TYPE B (EA)
ITEM 585.03M - STRUCTURAL LIFTING OPERATION - TYPE C (EA)

LEGEND:

ITEM 582.05M - REMOVAL OF STRUCTURAL CONCRETE- REPLACE WITH CLASS A CONCRETE (CM)

ITEM 582.07M - REMOVAL OF STRUCTURAL CONCRETE - REPLACE WITH VERTICAL OVER-HEAD PATCH MATERIAL. (SM)

ALL DIMENSIONS ARE IN mm UNLESS OTHERWISE NOTED

AS BUILT REVISIONS

SIGNATURE | DATE

INTERSTATE 481 NB
OVER
CSX RAILROAD YARD
PIER 5

STATE OF NEW YORK
DEPARTMENT OF TRANSPORTATION

FILENAME	REGION	DATE	DRAWING NO.
305613AE.P5A	3	10/02	PR17-5N

DESIGN SUPERVISOR ____ JOB MANAGER ____ DESIGNED BY ____ ESTIMATED BY ____ DRAFTED BY ____ CHECKED BY ____ CHECKED BY ____

FED ROAD REG. NO.	STATE	CONTRACT NO.	SHEET NO.	TOTAL SHEETS
1	N.Y.	D259214	321	432

BRIDGE REHABILITATION PROJECT (ELEMENT SPECIFIC)
VARIOUS BRIDGES ON INTERSTATE 481
TOWNS OF DEWITT AND CICERO
ONONDAGA COUNTY
P.I.N. 305613 B.I.N. 1093572

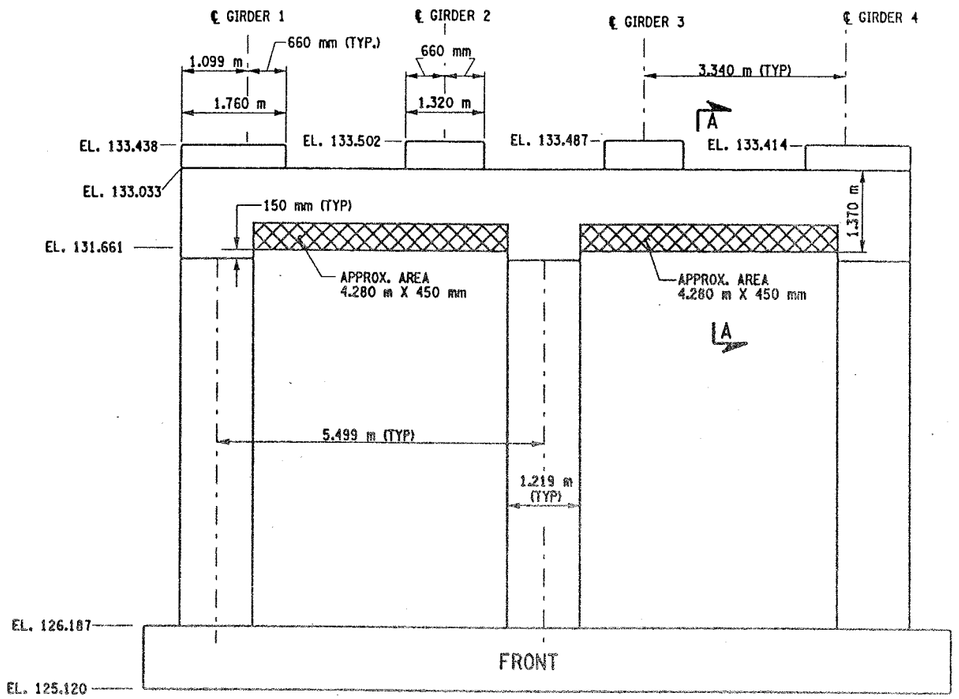

PIER 6 -FRONT FACE (LOOKING NORTH)

BIN 1093572

SCALE: 1 TO 50

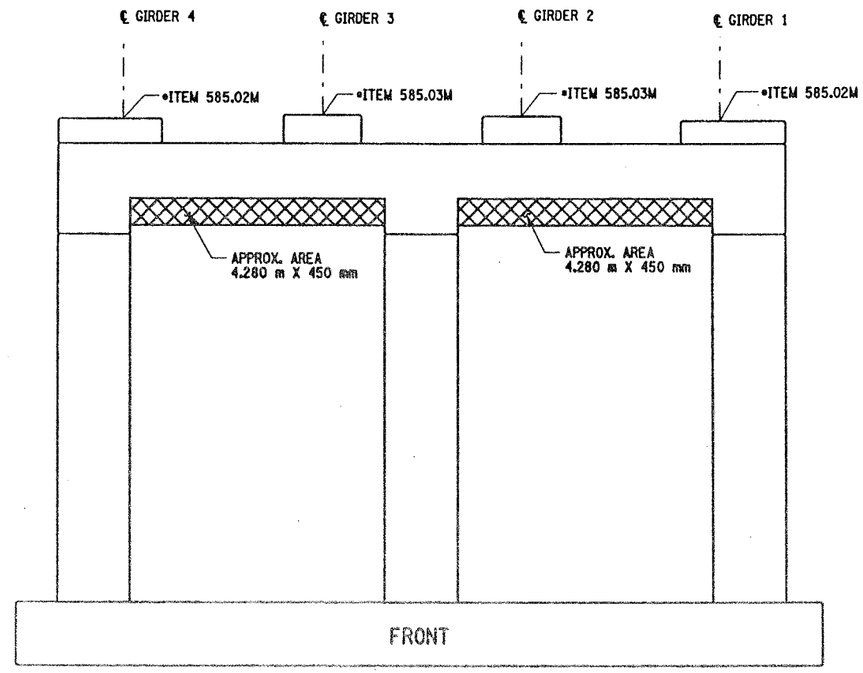

PIER 6 BACK FACE (LOOKING SOUTH)

BIN 1093572

SCALE: 1 TO 50

NOTES:

1. ALL REINFORCEMENT TO REMAIN.
2. RESTORE TO ORIGINAL DIMENSIONS.
3. PEDESTALS NUMERICALLY NUMBERED FROM WEST TO EAST.
4. FOR THE CONCRETE REPAIR AREAS, THE CONCRETE SHALL BE REMOVED TO AT LEAST 40mm MIN. BEYOND THE ENCOUNTERED REINFORCEMENT AND TO SOUND CONCRETE, A.O.B.E.
5. ELEVATIONS SHOWN ARE FROM ORIGINAL CONTRACT PLANS F.I.S.H. 70-7 AND ARE FOR REFERENCE ONLY.
6. REMOVAL DIMENSIONS SHOWN ON PLANS ARE ESTIMATED AND SHALL BE FIELD VERIFIED BY THE CONTRACTOR AND ENGINEER PRIOR TO BEGINNING OF REMOVAL OPERATIONS A.O.B.E.
7. ~~PERFORM BEARING RESTORATION TO ALL EXPANSION BEARINGS (TO INCLUDE RESETTING OF UNDEREXTENDED OR OVEREXTENDED BEARINGS). SEE DWG. BR-10 & BR-11 FOR BEARING RESTORATION DETAILS. SEE DWG. PR17-1S FOR BEARING RESTORATION NOTES.~~
8. SEE DWG. PR17-2S FOR SECTION "A-A".
9. ALL CONCRETE REMOVAL SHALL BE SAWCUT TO PRODUCE NEAT REMOVAL LINES. COST TO BE INCLUDED IN THE PRICE BID FOR ITEM 582.05M AND 582.07M.
10. FOR JACKING NOTES SEE DWG. PR17-1S.

• PERFORM STRUCTURAL LIFTING UNDER ITEM 585.02M - STRUCTURAL LIFTING OPERATIONS - TYPE B (LIFTING AT A PIER) OR ITEM 585.03M - STRUCTURAL LIFTING OPERATIONS - TYPE C (LIFTING AT A PIER WHERE THE CONTRACTOR SHALL BE REQUIRED TO LIFT OFF THE FOOTING AND/OR GROUND LEVEL.

JACKING LOADS:

D.L. = 75 MT
L.L. = 50 MT
TOTAL = 125 MT

LEGEND

ITEM 582.07M - REMOVAL OF STRUCTURAL CONCRETE - REPLACE WITH VERTICAL OVERHEAD PATCH MATERIAL. (SM)

LIST OF ITEMS USED:

ITEM 15565.4302M- BRIDGE BEARING RESTORATION (EA)
ITEM 582.07M - REM. OF STRUC. CONC. - REPL. W/ VERT. OVERHEAD PATCH MAT'L (SM)
ITEM 585.02M - STRUCTURAL LIFTING OPERATIONS - TYPE B (EA)
ITEM 585.03M - STRUCTURAL LIFTING OPERATION - TYPE C (EA)

ALL DIMENSIONS ARE IN mm UNLESS OTHERWISE NOTED

AS BUILT REVISIONS

SIGNATURE DATE

INTERSTATE 481 NB
OVER
CSX RAILROAD YARD
PIER 6

STATE OF NEW YORK
DEPARTMENT OF TRANSPORTATION

FILENAME	REGION	DATE	DRAWING NO.
305613AE.P6A	3	10/02	PR17-6N

DESIGN SUPERVISOR ____ JOB MANAGER ____ DESIGNED BY ____ CHECKED BY ____ ESTIMATED BY ____ DRAFTED BY ____ CHECKED BY ____

FED ROAD REG. NO.	STATE	CONTRACT NO.	SHEET NO.	TOTAL SHEETS
1	N.Y.	D259214	322	432

BRIDGE REHABILITATION PROJECT (ELEMENT SPECIFIC)
VARIOUS BRIDGES ON INTERSTATE 481
TOWNS OF DEWITT AND CICERO
ONONDAGA COUNTY
P.I.N. 305613 B.I.N. 1093572

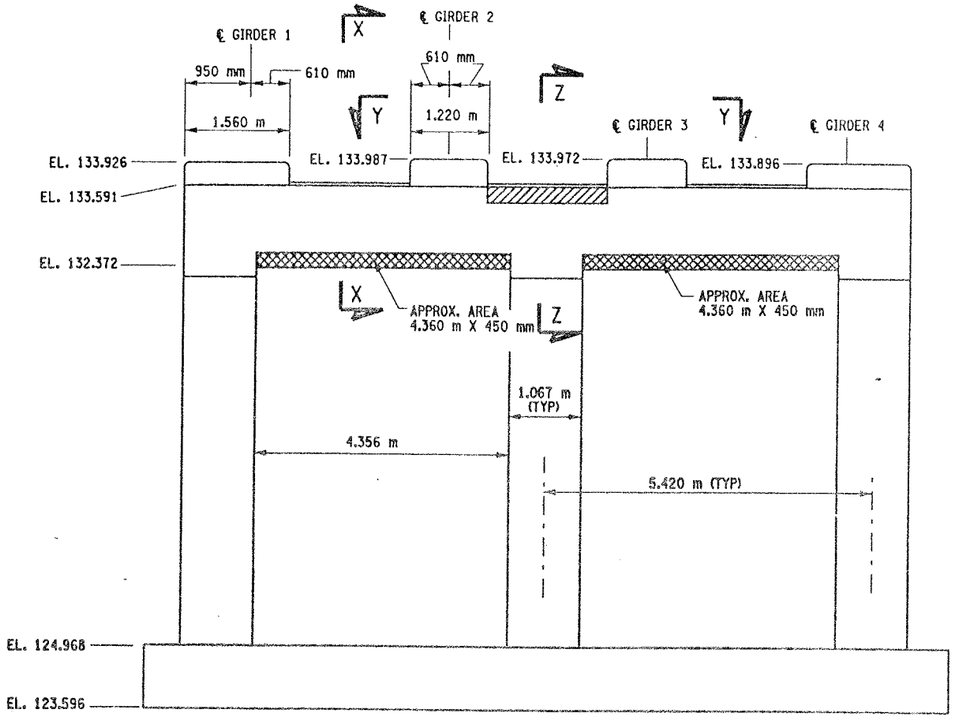

PIER 7 - FRONT FACE (LOOKING NORTH)
BIN 1093572
SCALE: 1 TO 50

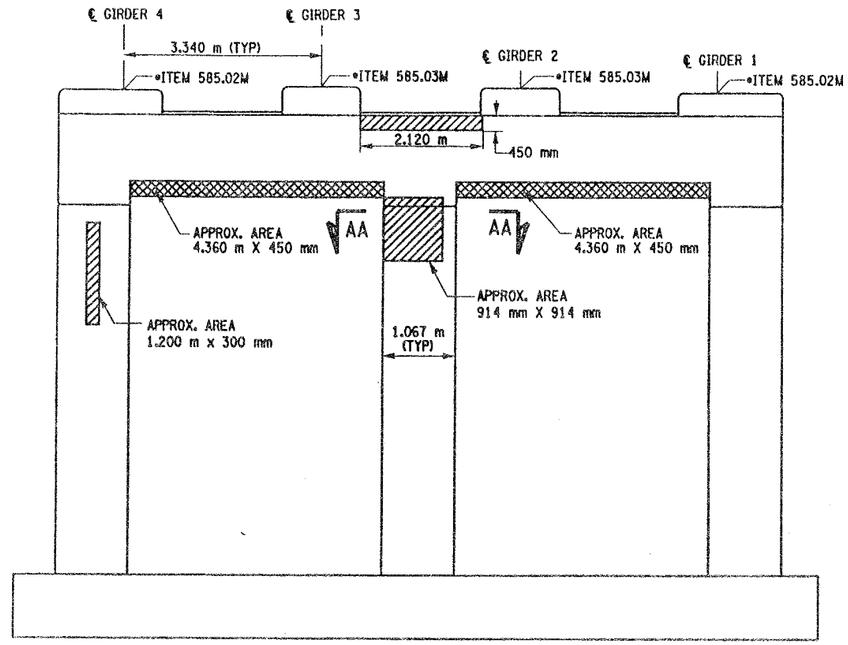

PIER 7 - BACK FACE (LOOKING SOUTH)
BIN 1093572
SCALE: 1 TO 50

NOTES:

1. ALL REINFORCEMENT TO REMAIN.
2. RESTORE TO ORIGINAL DIMENSIONS.
3. PEDESTALS NUMERICALLY NUMBERED FROM WEST TO EAST.
4. FOR THE CONCRETE REPAIR AREAS, THE CONCRETE SHALL BE REMOVED TO AT LEAST 40mm MIN. BEYOND THE ENCOUNTERED REINFORCEMENT AND TO SOUND CONCRETE, A.O.B.E.
5. ELEVATIONS SHOWN ARE FROM ORIGINAL CONTRACT PLANS F.I.S.H. 70-7 AND ARE FOR REFERENCE ONLY.
6. REMOVAL DIMENSIONS SHOWN ON PLANS ARE ESTIMATED AND SHALL BE FIELD VERIFIED BY THE CONTRACTOR PRIOR TO BEGINNING OF REMOVAL OPERATIONS A.O.B.E.
7. PERFORM BEARING RESTORATION TO ALL EXPANSION BEARINGS (TO INCLUDE RESETTING OF UNDEREXTENDED OR OVEREXTENDED BEARINGS). SEE DWG. PR17-1S FOR BEARING RESTORATION NOTES. SEE DWG. BR-10 & BR-11 FOR BEARING RESTORATION DETAILS.
8. ALL CONCRETE REMOVAL SHALL BE SAWCUT TO PRODUCE NEAT REMOVAL LINES. COST TO BE INCLUDED IN THE PRICE BID FOR ITEM 582.05M AND 582.07M.
9. FOR JACKING NOTES SEE DWG PR17-1S.

• PERFORM STRUCTURAL LIFTING UNDER ITEM 585.02M - STRUCTURAL LIFTING OPERATIONS - TYPE B (LIFTING AT A PIER) OR ITEM 585.03M - STRUCTURAL LIFTING OPERATIONS - TYPE C (LIFTING AT A PIER WHERE THE CONTRACTOR SHALL BE REQUIRED TO LIFT OFF THE FOOTING AND/OR GROUND LEVEL.

JACKING LOADS:

D.L. = 75 MT
L.L. = 50 MT
TOTAL = 125 MT

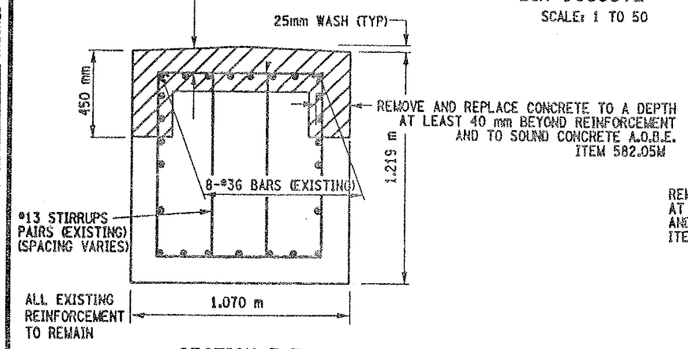

SECTION Z-Z
NOT TO SCALE

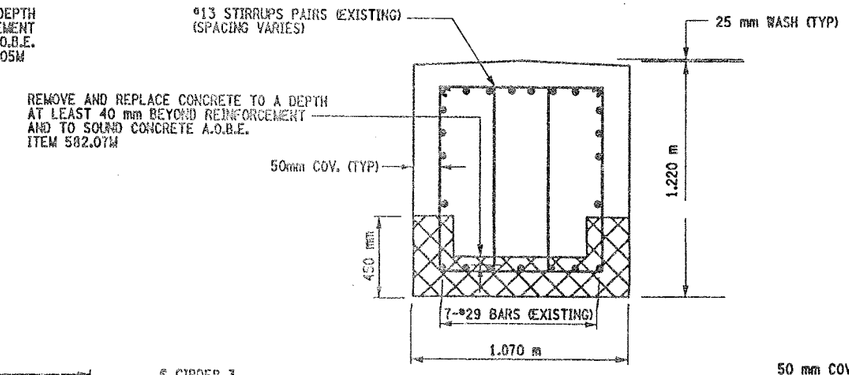

ALL EXISTING REINFORCEMENT TO REMAIN

SECTION X-X
NOT TO SCALE

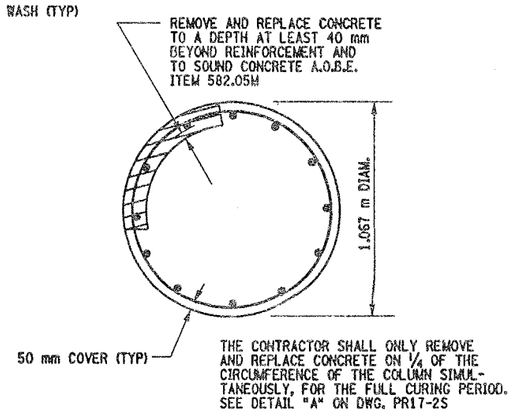

SECTION AA-AA

NOT TO SCALE

LEGEND:

ITEM 582.05M - REMOVAL OF STRUCTURAL CONCRETE- REPLACE WITH CLASS A CONCRETE. (CM)

ITEM 582.07M - REMOVAL OF STRUCTURAL CONCRETE - REPLACE WITH VERTICAL OVERHEAD PATCH MATERIAL. (SM)

ALL DIMENSIONS ARE IN mm UNLESS OTHERWISE NOTED

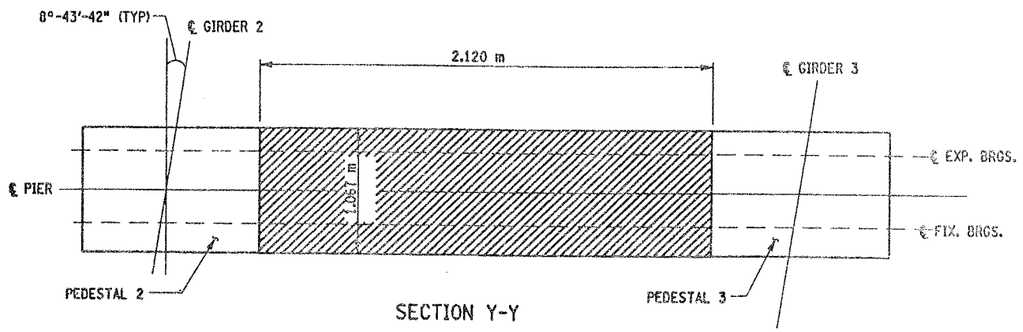

SECTION Y-Y
NOT TO SCALE

LIST OF ITEMS USED:

ITEM 15565.4302M - BRIDGE BEARING RESTORATION (EA)
ITEM 582.05M - REM. OF STRUC. CONC. - REPLACE WITH CLASS A CONCRETE (CM)
ITEM 582.07M - REM. OF STRUC. CONC. - REPL. W/ VERT. OVERHEAD PATCH MAT'L (SM)
ITEM 585.02M - STRUCTURAL LIFTING OPERATIONS - TYPE B (EA)
ITEM 585.03M - STRUCTURAL LIFTING OPERATION - TYPE C (EA)

AS BUILT REVISIONS

SIGNATURE DATE

INTERSTATE 481 NB
OVER
CSX RAILROAD YARD
PIER 7

STATE OF NEW YORK
DEPARTMENT OF TRANSPORTATION

FILENAME	REGION	DATE	DRAWING NO.
305613AE.PTA	3	10/02	PR17-7N

DESIGN SUPERVISOR ____ JOB MANAGER ____ DESIGNED BY ____ CHECKED BY ____ ESTIMATED BY ____ DRAFTED BY ____ CHECKED BY ____

FED ROAD REG. NO.	STATE	CONTRACT NO.	SHEET NO.	TOTAL SHEETS
1	N.Y.	D259214	323	432

BRIDGE REHABILITATION PROJECT (ELEMENT SPECIFIC)
VARIOUS BRIDGES ON INTERSTATE 481
TOWNS OF DEWITT AND CICERO
ONONDAGA COUNTY
P.I.N. 305613 B.I.N. 1093572

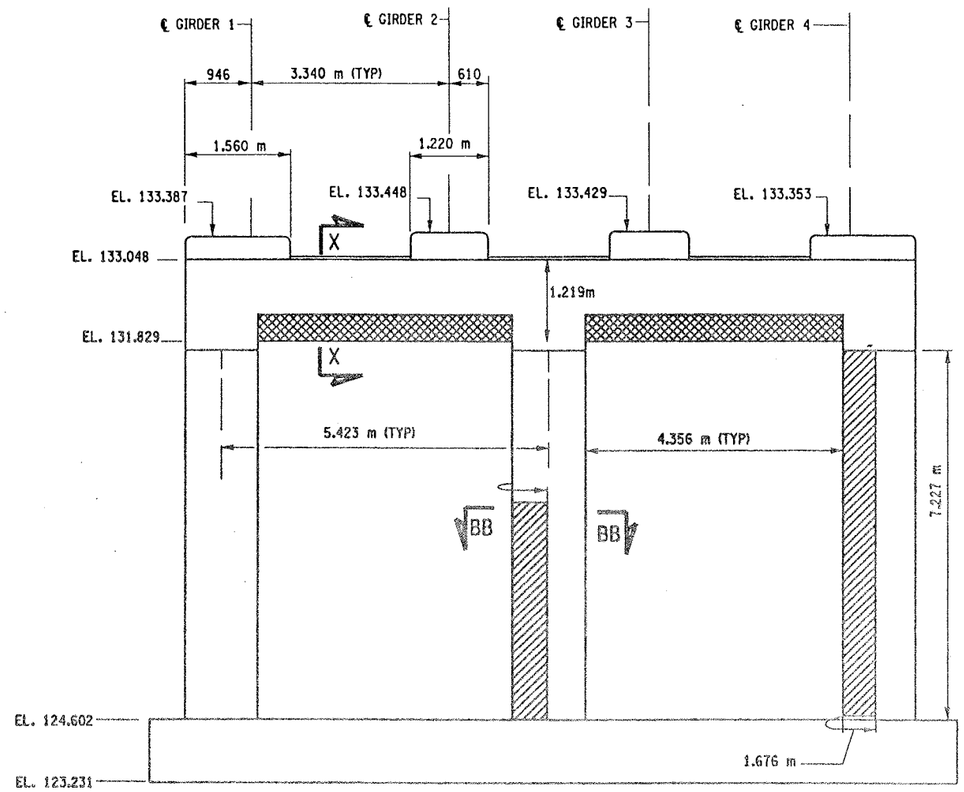

PIER 8 - FRONT FACE (LOOKING NORTH)
BIN 1093572
SCALE: 1 TO 50

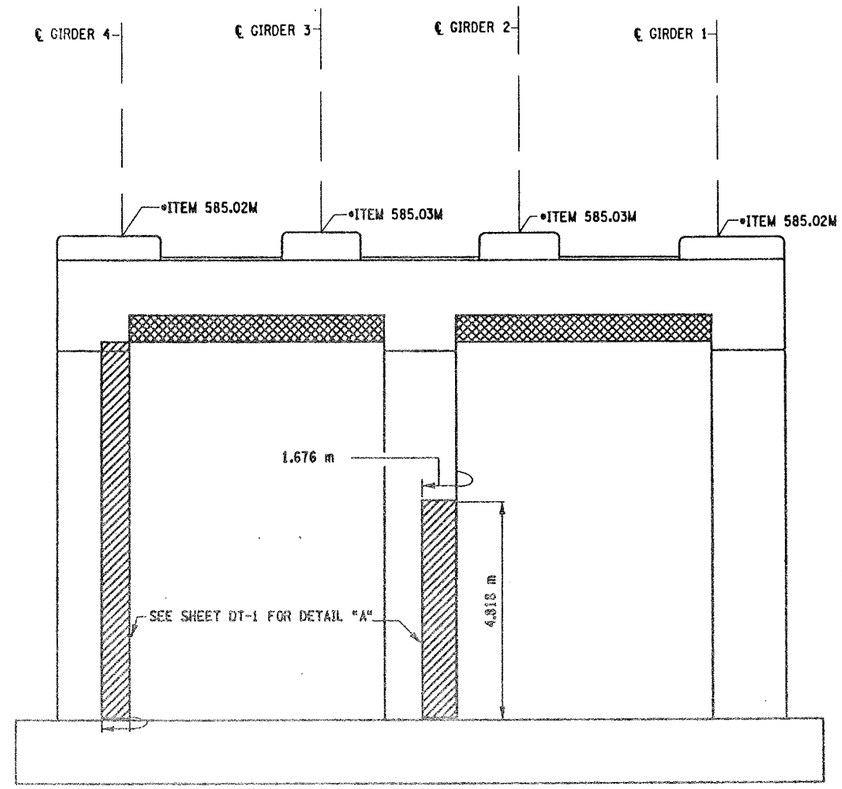

PIER 8 - BACK FACE (LOOKING SOUTH)
BIN 1093572
SCALE: 1 TO 50

NOTES:

1. ALL REINFORCEMENT TO REMAIN.
2. RESTORE TO ORIGINAL DIMENSIONS.
3. PEDESTALS NUMERICALLY NUMBERED FROM WEST TO EAST.
4. FOR THE CONCRETE REPAIR AREAS, THE CONCRETE SHALL BE REMOVED TO AT LEAST 40mm MIN. BEYOND THE ENCOUNTERED REINFORCEMENT AND TO SOUND CONCRETE, A.O.B.E.
5. ELEVATIONS SHOWN ARE FROM ORIGINAL CONTRACT PLANS F.I.S.H. 70-7 AND ARE FOR REFERENCE ONLY.
6. REMOVAL DIMENSIONS SHOWN ON PLANS ARE ESTIMATED AND SHALL BE FIELD VERIFIED BY THE CONTRACTOR AND ENGINEER PRIOR TO BEGINNING OF REMOVAL OPERATIONS A.O.B.E.
7. PERFORM BEARING RESTORATION TO ALL EXPANSION BEARINGS (TO INCLUDE RESETTING OF UNDEREXTENDED OR OVEREXTENDED BEARINGS). SEE DWG. BR-10 & BR-11 FOR BEARING RESTORATION DETAILS. SEE DWG. PR17-1S FOR BEARING RESTORATION NOTES.
8. SEE DWG. PR17-12S FOR SECTION BB-BB.
9. SEE DWG. PR17-7N FOR SECTION X-X.
10. ALL CONCRETE REMOVAL SHALL BE SAWCUT TO PRODUCE NEAT REMOVAL LINES. COST TO BE INCLUDED IN THE PRICE BID FOR ITEM 582.05M AND 582.07M.
11. FOR JACKING NOTES SEE DWG PR17-1S.

• PERFORM STRUCTURAL LIFTING UNDER ITEM 585.02M - STRUCTURAL LIFTING OPERATIONS - TYPE B (LIFTING AT A PIER) OR ITEM 585.03M - STRUCTURAL LIFTING OPERATIONS - TYPE C (LIFTING AT A PIER WHERE THE CONTRACTOR SHALL BE REQUIRED TO LIFT OFF THE FOOTING AND/OR GROUND LEVEL.

JACKING LOADS:

D.L. = 75 MT
L.L. = 50 MT
TOTAL = 125 MT

LEGEND:

ITEM 582.05M - REMOVAL OF STRUCTURAL CONCRETE- REPLACE WITH CLASS A CONCRETE (CM)

ITEM 582.07M - REMOVAL OF STRUCTURAL CONCRETE - REPLACE WITH VERTICAL OVERHEAD PATCH MATERIAL. (SM)

ALL DIMENSIONS ARE IN mm UNLESS OTHERWISE NOTED

LIST OF ITEMS USED:

ITEM 15565.4302M - BRIDGE BEARING RESTORATION (EA)
ITEM 582.05M - REM. OF STRUC. CONC. - REPLACE WITH CLASS A CONCRETE (CM)
ITEM 582.07M - REM. OF STRUC. CONC. - REPL. W/ VERT. OVERHEAD PATCH MATL. (SM)
ITEM 585.02M - STRUCTURAL LIFTING OPERATIONS - TYPE B (EA)
ITEM 585.03M - STRUCTURAL LIFTING OPERATION - TYPE C (EA)

AS BUILT REVISIONS

SIGNATURE DATE

INTERSTATE 481 NB
OVER
CSX RAILROAD YARD
PIER 8

STATE OF NEW YORK
DEPARTMENT OF TRANSPORTATION

FILENAME	REGION	DATE	DRAWING NO.
305613AE.P8A	3	10/02	PR17-8N

DESIGN SUPERVISOR ____ JOB MANAGER ____ DESIGNED BY ____ ESTIMATED BY ____ DRAFTED BY ____ CHECKED BY ____ CHECKED BY ____

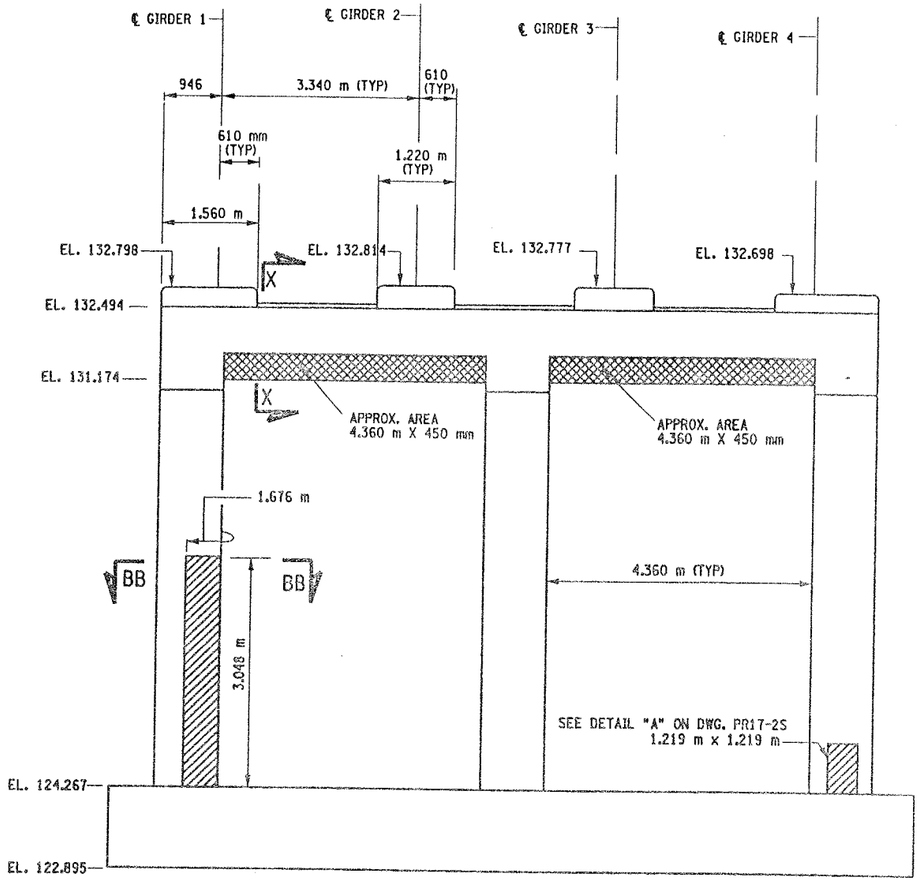

PIER 9 - FRONT FACE (LOOKING NORTH)

BIN 1093572

SCALE: 1 TO 50

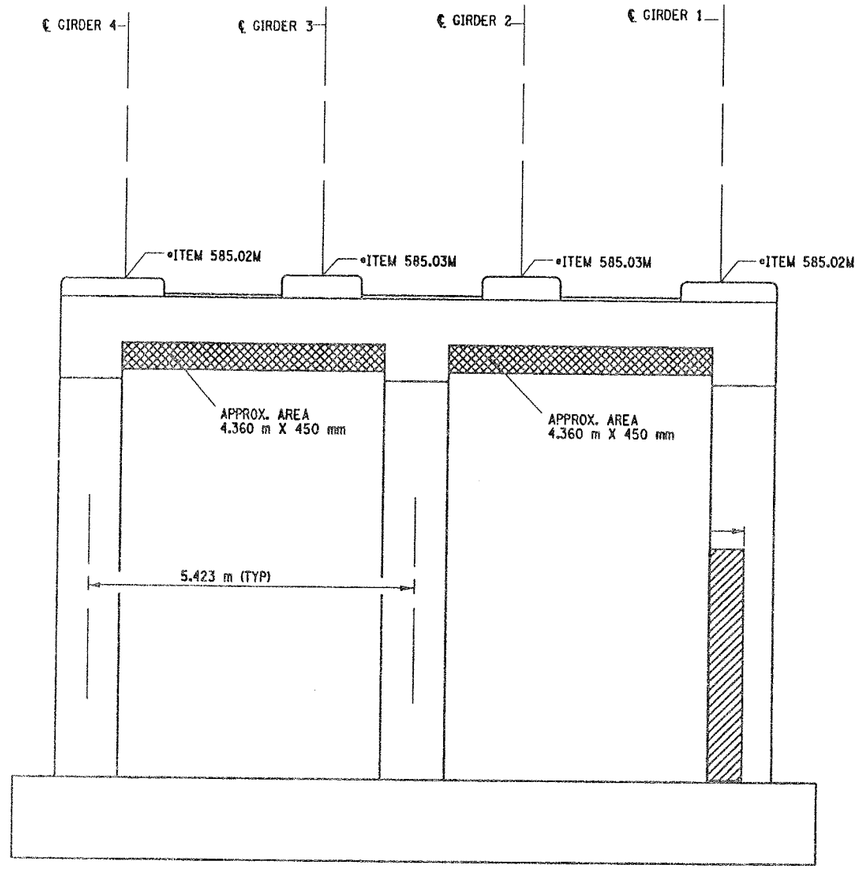

PIER 9 - BACK FACE (LOOKING SOUTH)

BIN 1093572

SCALE: 1 TO 50

FED ROAD REG. NO.	STATE	CONTRACT NO.	SHEET NO.	TOTAL SHEETS
1	N.Y.	D259214	324	432

BRIDGE REHABILITATION PROJECT (ELEMENT SPECIFIC)

VARIOUS BRIDGES ON INTERSTATE 481

TOWNS OF DEWITT AND CICERO

ONONDAGA COUNTY

P.I.N. 305613 B.I.N. 1093572

NOTES:

1. ALL REINFORCEMENT TO REMAIN.
2. RESTORE TO ORIGINAL DIMENSIONS.
3. PEDESTALS NUMERICALLY NUMBERED FROM WEST TO EAST.
4. FOR THE CONCRETE REPAIR AREAS, THE CONCRETE SHALL BE REMOVED TO AT LEAST 40mm MIN. BEYOND THE ENCOUNTERED REINFORCEMENT AND TO SOUND CONCRETE, A.O.B.E.
5. ELEVATIONS SHOWN ARE FROM ORIGINAL CONTRACT PLANS F.I.S.H. 70-7 AND ARE FOR REFERENCE ONLY.
6. REMOVAL DIMENSIONS SHOWN ON PLANS ARE ESTIMATED AND SHALL BE FIELD VERIFIED BY THE CONTRACTOR PRIOR TO BEGINNING OF REMOVAL OPERATIONS A.O.B.E.
7. PERFORM BEARING RESTORATION TO ALL EXPANSION BEARINGS (TO INCLUDE RESETTING OF UNDEREXTENDED OR OVEREXTENDED BEARINGS). SEE DWG. PR-1S FOR BEARING RESTORATION NOTES. SEE DWG. BR-10 & BR-11 FOR BEARING RESTORATION DETAILS.
8. SEE DWG. PR17- 12S FOR SECTION BB-BB.
9. ALL CONCRETE REMOVAL SHALL BE SAWCUT TO PRODUCE NEAT REMOVAL LINES. COST TO BE INCLUDED IN THE PRICE BID FOR ITEM 582.05M AND 582.07M.
10. FOR JACKING NOTES SEE DWG PR17-1S
11. SEE DWG. PR17-7N FOR SECTION X - X.

• PERFORM STRUCTURAL LIFTING UNDER ITEM 585.02M - STRUCTURAL LIFTING OPERATIONS - TYPE B LIFTING AT A PIER) OR ITEM 585.03M - STRUCTURAL LIFTING OPERATIONS - TYPE C LIFTING AT A PIER WHERE THE CONTRACTOR SHALL BE REQUIRED TO LIFT OFF THE FOOTING AND/OR GROUND LEVEL.

JACKING LOADS:

D.L. = 75 MT
L.L. = 50 MT
TOTAL = 125 MT

LEGEND:

ITEM 582.05M - REMOVAL OF STRUCTURAL CONCRETE- REPLACE WITH CLASS A CONCRETE. (CM)

ITEM 582.07M - REMOVAL OF STRUCTURAL CONCRETE - REPLACE WITH VERTICAL OVER-HEAD PATCH MATERIAL. (SM)

LIST OF ITEMS USED:

ITEM 15565.4302M - BRIDGE BEARING RESTORATION (EA)
ITEM 582.05M - REM. OF STRUC. CONC. - REPLACE WITH CLASS A CONCRETE (CM)
ITEM 582.07M - REM. OF STRUC. CONC. - REPL. W/ VERT. OVERHEAD PATCH MAT.L (SM)
ITEM 585.02M - STRUCTURAL LIFTING OPERATIONS - TYPE B (EA)
ITEM 585.03M - STRUCTURAL LIFTING OPERATION - TYPE C (EA)

ALL DIMENSIONS ARE IN mm UNLESS OTHERWISE NOTED

AS BUILT REVISIONS

SIGNATURE DATE

INTERSTATE ROUTE 481 NB
OVER CSX RAILROAD YARD
PIER 9

STATE OF NEW YORK
DEPARTMENT OF TRANSPORTATION

FILENAME	REGION	DATE	DRAWING NO.
305613AE.P9A	3	10/02	PR17-9N

DESIGN SUPERVISOR ____ JOB MANAGER ____ DESIGNED BY ____ CHECKED BY ____ ESTIMATED BY ____ DRAFTED BY ____ CHECKED BY ____

FED ROAD REG. NO.	STATE	CONTRACT NO.	SHEET NO.	TOTAL SHEETS
1	N.Y.	D259214	325	432

BRIDGE REHABILITATION PROJECT (ELEMENT SPECIFIC)
VARIOUS BRIDGES ON INTERSTATE 481
TOWNS OF DEWITT AND CICERO
ONONDAGA COUNTY
P.I.N. 305613 | B.I.N. 1093572

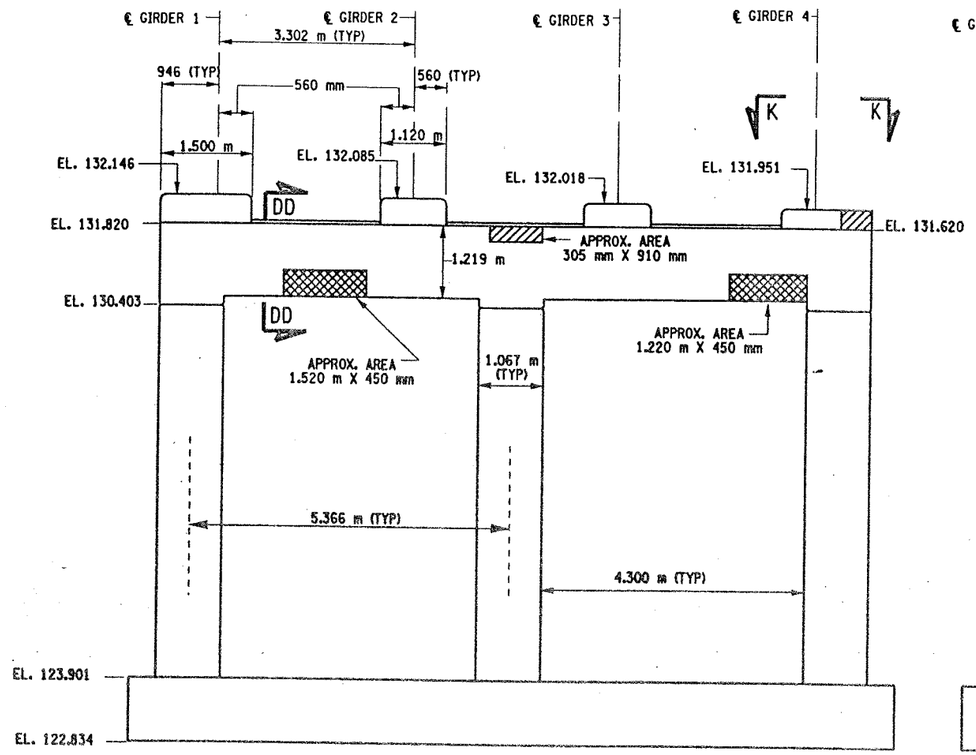

PIER 10 - FRONT FACE (LOOKING NORTH)
BIN 1093572
SCALE: 1 TO 50

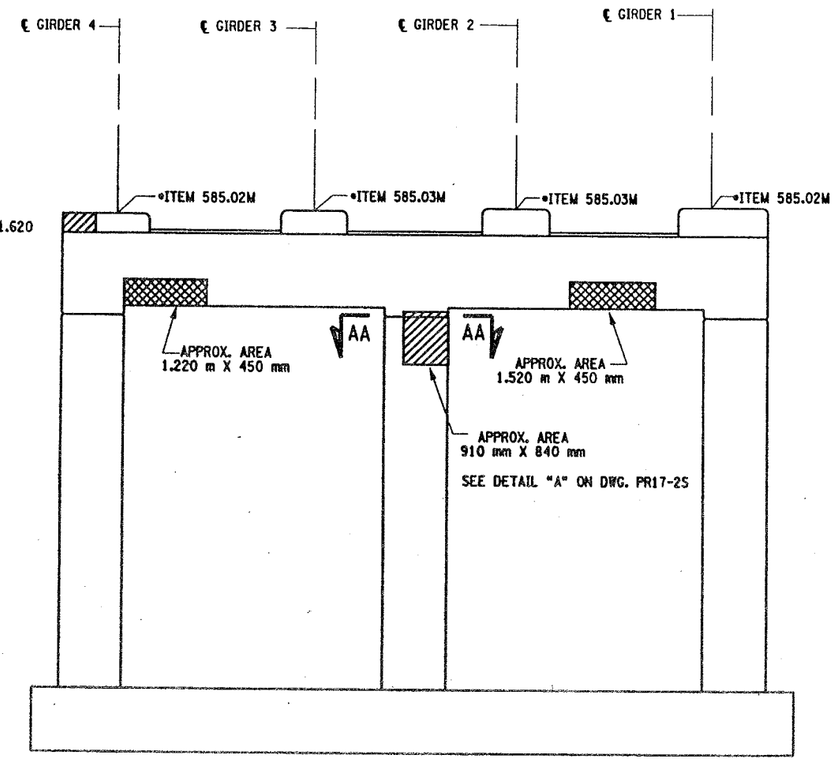

PIER 10 - BACK FACE (LOOKING SOUTH)
BIN 1093572
SCALE: 1 TO 50

NOTES:

1. ALL REINFORCEMENT TO REMAIN.
2. RESTORE TO ORIGINAL DIMENSIONS.
3. PEDESTALS NUMERICALLY NUMBERED FROM WEST TO EAST.
4. FOR THE CONCRETE REPAIR AREAS, THE CONCRETE SHALL BE REMOVED TO AT LEAST 40mm MIN. BEYOND THE ENCOUNTERED REINFORCEMENT AND TO SOUND CONCRETE, A.O.B.E.
5. ELEVATIONS SHOWN ARE FROM ORIGINAL CONTRACT PLANS F.I.S.H. 70-7 AND ARE FOR REFERENCE ONLY.
6. REMOVAL DIMENSIONS SHOWN ON PLANS ARE ESTIMATED AND SHALL BE FIELD VERIFIED BY THE CONTRACTOR PRIOR TO BEGINNING OF REMOVAL OPERATIONS A.O.B.E.
7. PERFORM BEARING RESTORATION TO ALL EXPANSION BEARINGS (TO INCLUDE RESETTING OF UNDEREXTENDED OR OVEREXTENDED BEARINGS). SEE DWG. PR17-1S FOR BEARING RESTORATION NOTES. SEE DWG. BR-10 & BR-11 FOR BEARING RESTORATION DETAILS.
8. FOR SECTION AA-AA SEE DWG. PR17-7N.
9. ALL CONCRETE REMOVAL SHALL BE SAWCUT TO PRODUCE NEAT REMOVAL LINES. COST TO BE INCLUDED IN THE PRICE BID FOR ITEM 582.05M AND ITEM 582.07M.
10. FOR JACKING NOTES SEE DWG PR17-1S.

• PERFORM STRUCTURAL LIFTING UNDER ITEM 585.02M - STRUCTURAL LIFTING OPERATIONS - TYPE B LIFTING AT A PIER) OR ITEM 585.03M - STRUCTURAL LIFTING OPERATIONS - TYPE C LIFTING AT A PIER WHERE THE CONTRACTOR SHALL BE REQUIRED TO LIFT OFF THE FOOTING AND/OR GROUND LEVEL.

JACKING LOADS:

D.L. = 75 MT
L.L. = 50 MT
TOTAL = 125 MT

LEGEND:

ITEM 582.05M - REMOVAL OF STRUCTURAL CONCRETE- REPLACE WITH CLASS A CONCRETE (CM)

ITEM 582.07M - REMOVAL OF STRUCTURAL CONCRETE - REPLACE WITH VERTICAL OVER-HEAD PATCH MATERIAL. (SM)

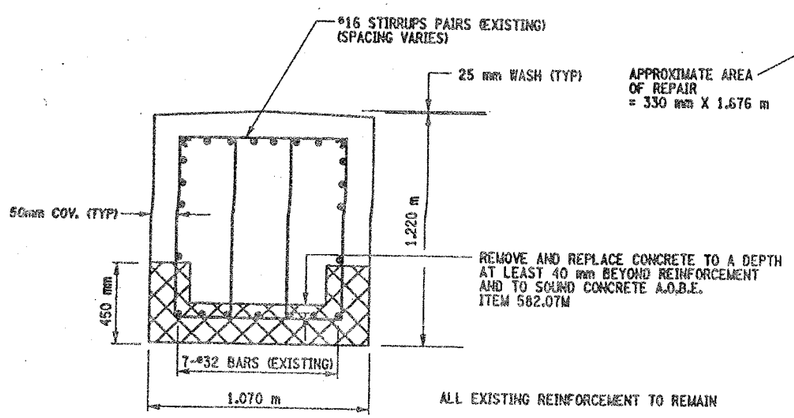

SECTION DD-DD
NOT TO SCALE

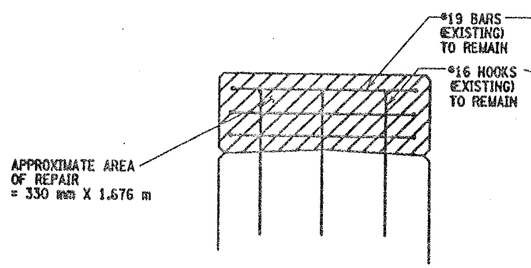

SECTION N-N
NOT TO SCALE

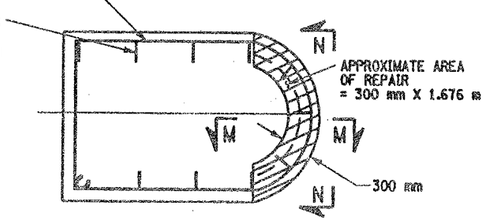

SECTION K-K
NOT TO SCALE

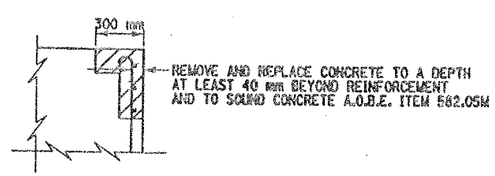

SECTION M-M
NOT TO SCALE

LIST OF ITEMS USED:

ITEM 15565.4302M - BRIDGE BEARING RESTORATION (EA)
ITEM 582.05M - REM. OF STRUC. CONC. - REPLACE WITH CLASS A CONCRETE (CM)
ITEM 582.07M - REM. OF STRUC. CONC. - REPL. W/ VERT. OVERHEAD PATCH MAT'L. (SM)
ITEM 585.02M - STRUCTURAL LIFTING OPERATIONS - TYPE B (EA)
ITEM 585.03M - STRUCTURAL LIFTING OPERATION - TYPE C (EA)

ALL DIMENSIONS ARE IN mm UNLESS OTHERWISE NOTED

AS BUILT REVISIONS

SIGNATURE | DATE

INTERSTATE 481 NB
OVER
CSX RAILROAD YARD
PIER 10

STATE OF NEW YORK
DEPARTMENT OF TRANSPORTATION

FILENAME	REGION	DATE	DRAWING NO.
305613AE.P10	3	10/02	PR17-10N

DESIGN SUPERVISOR ____ JOB MANAGER ____ DESIGNED BY ____ CHECKED BY ____ ESTIMATED BY ____ DRAFTED BY ____ CHECKED BY ____

FED ROAD REG. NO.	STATE	CONTRACT NO.	SHEET NO.	TOTAL SHEETS
1	N.Y.	D259214	326	432

BRIDGE REHABILITATION PROJECT (ELEMENT SPECIFIC)
VARIOUS BRIDGES ON INTERSTATE 481
TOWNS OF DEWITT AND CICERO
ONONDAGA COUNTY
P.I.N. 305613 | B.I.N. 1093572

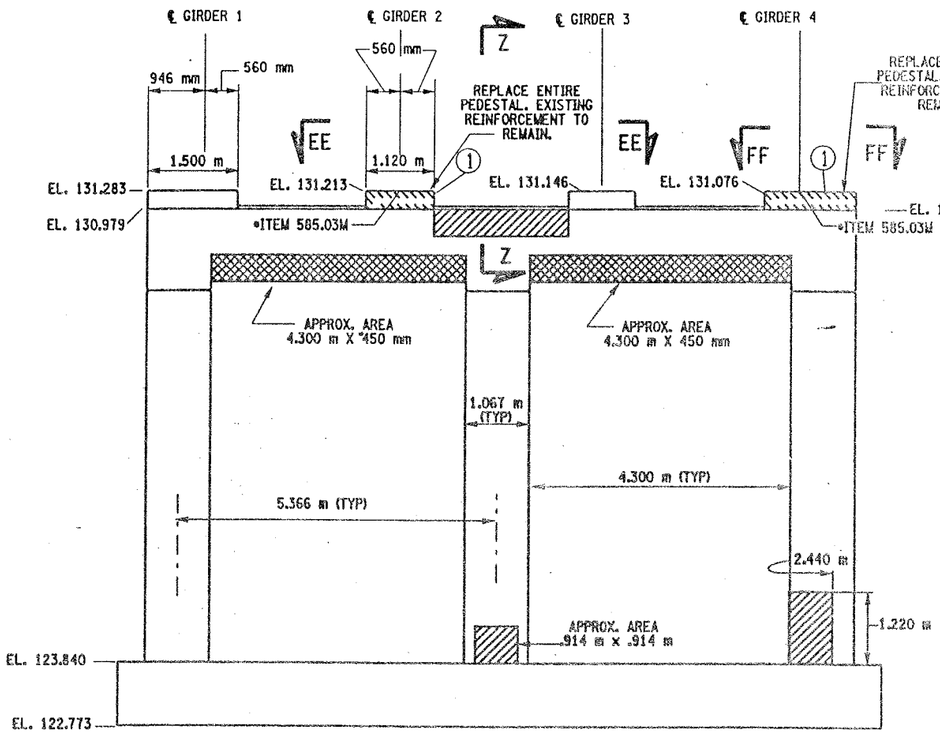

PIER 11 - FRONT FACE (LOOKING NORTH)
BIN 1093572
SCALE: 1 TO 50

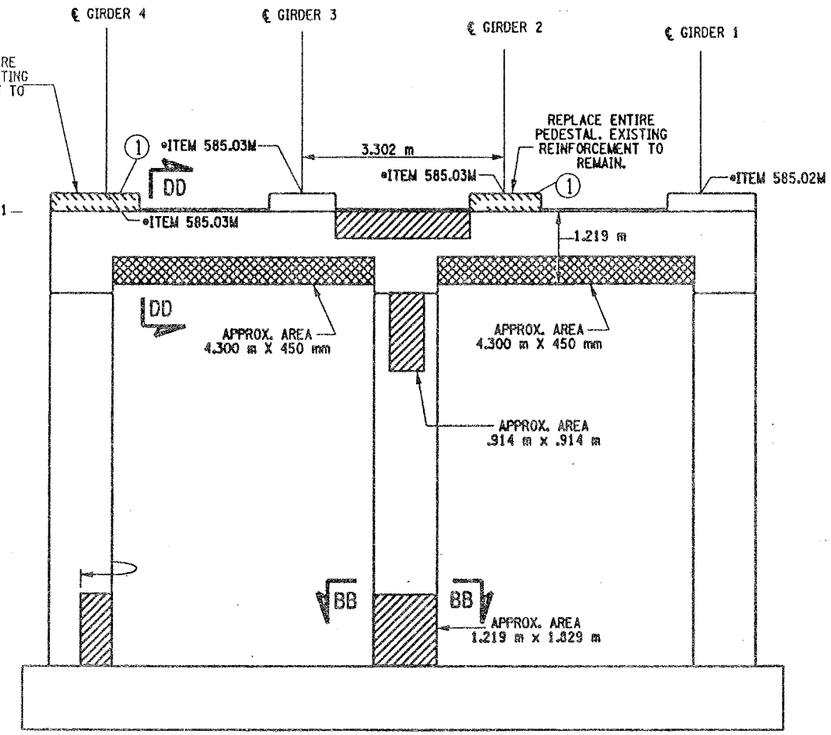

PIER 11- BACK FACE (LOOKING SOUTH)
BIN 1093572
SCALE: 1 TO 50

NOTES:

1. ALL REINFORCEMENT TO REMAIN.
2. RESTORE TO ORIGINAL DIMENSIONS.
3. PEDESTALS NUMERICALLY NUMBERED FROM WEST TO EAST.
4. FOR THE CONCRETE REPAIR AREAS, THE CONCRETE SHALL BE REMOVED TO AT LEAST 40mm MIN. BEYOND THE ENCOUNTERED REINFORCEMENT AND TO SOUND CONCRETE, A.O.B.E.
5. ELEVATIONS SHOWN ARE FROM ORIGINAL CONTRACT PLANS F.I.S.H. 70-7 AND ARE FOR REFERENCE ONLY.
6. REMOVAL DIMENSIONS SHOWN ON PLANS ARE ESTIMATED AND SHALL BE FIELD VERIFIED BY THE CONTRACTOR PRIOR TO BEGINNING OF REMOVAL OPERATIONS A.O.B.E.
7. PERFORM BEARING RESTORATION TO ALL EXPANSION BEARINGS (TO INCLUDE RESETTING OF UNDEREXTENDED OR OVEREXTENDED BEARINGS). SEE DWG. PR17-1S FOR BEARING RESTORATION NOTES. SEE DWG. BR-10 & BR-11 FOR BEARING RESTORATION DETAILS.
8. SEE DWG PR17-10N FOR SECTION DD-DD.
9. SEE DWG. PR17-12S FOR SECTION BB-BB.
10. SEE DWG. PR17-7N FOR SECTION Z-Z.
11. PEDESTALS 2 AND 4 SHALL BE REPLACED TO EXISTING DIMENSIONS. ITEM 555.0105 M
12. ALL CONCRETE REMOVAL SHALL BE SAWCUT TO PRODUCE NEAT REMOVAL LINES. COST TO BE INCLUDED IN THE PRICE BID FOR ITEM 582.05M AND ITEM 582.07M.
13. FOR JACKING NOTES SEE DWG PR17-1S.

• PERFORM STRUCTURAL LIFTING UNDER ITEM 585.02M - STRUCTURAL LIFTING OPERATIONS - TYPE B (LIFTING AT A PIER) OR ITEM 585.03M - STRUCTURAL LIFTING OPERATIONS - TYPE C (LIFTING AT A PIER WHERE THE CONTRACTOR SHALL BE REQUIRED TO LIFT OFF THE FOOTING AND/OR GROUND LEVEL.

JACKING LOADS:

D.L. = 75 MT
L.L. = 50 MT
TOTAL = 125 MT

(1) INDICATES CONCRETE PLACEMENT NUMBER

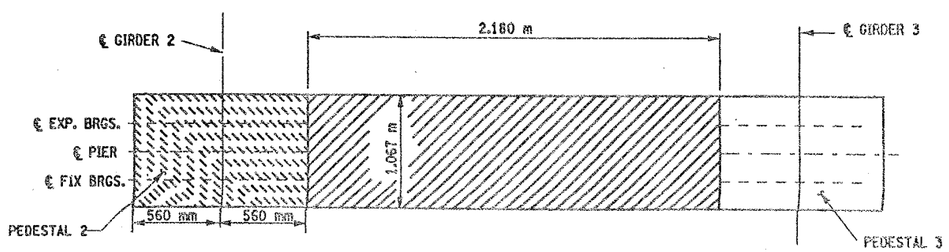

SECTION EE-EE
NOT TO SCALE

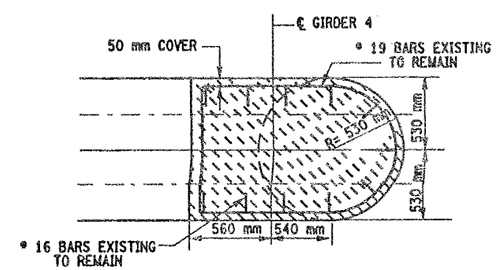

SECTION FF-FF
NOT TO SCALE

LEGEND:

- ITEM 582.05M - REMOVAL OF STRUCTURAL CONCRETE- REPLACE WITH CLASS A CONCRETE. (CM)
- ITEM 582.07M - REMOVAL OF STRUCTURAL CONCRETE - REPLACE WITH VERTICAL OVER-HEAD PATCH MATERIAL. (SM)
- ITEM 580.01 M - REMOVAL OF STRUCTURAL CONCRETE. (CM) AND ITEM 555.0105 M - CONCRETE FOR STRUCTURES CLASS A. (CM)

ALL DIMENSIONS ARE IN mm UNLESS OTHERWISE NOTED

CONCRETE TABLE (m^3)		
PLACEMENT	QUANTITY	ITEM NO.
1	0.80	555.0105M

LIST OF ITEMS USED

ITEM 555.0105M - CONCRETE FOR STRUCTURES, CLASS A (CM)
ITEM 15565.4302M - BRIDGE BEARING RESTORATION (EA)
ITEM 580.01M - REMOVAL OF STRUCTURAL CONCRETE (CM)
ITEM 582.05M - REM. OF STRUC. CONC. - REPLACE WITH CLASS A CONCRETE (CM)
ITEM 582.07M - REM. OF STRUC. CONC. - REPL. W/ VERT. OVERHEAD PATCH MAT'L (SM)
ITEM 585.02M - STRUCTURAL LIFTING OPERATIONS - TYPE B (EA)
ITEM 585.03M - STRUCTURAL LIFTING OPERATION - TYPE C (EA)

AS BUILT REVISIONS

SIGNATURE | DATE

INTERSTATE 481 NB
OVER
CSX RAILROAD YARD
PIER 11

STATE OF NEW YORK
DEPARTMENT OF TRANSPORTATION

FILENAME	REGION	DATE	DRAWING NO.
305613AE.P11	3	10/02	PR17-11N

DESIGN SUPERVISOR ____ JOB MANAGER ____ DESIGNED BY ____ CHECKED BY ____ ESTIMATED BY ____ DRAFTED BY ____ CHECKED BY ____

FED ROAD REG. NO.	STATE	CONTRACT NO.	SHEET NO.	TOTAL SHEETS
1	N.Y.	D259214	327	432

BRIDGE REHABILITATION PROJECT (ELEMENT SPECIFIC)
VARIOUS BRIDGES ON INTERSTATE 481
TOWNS OF DEWITT AND CICERO
ONONDAGA COUNTY
P.I.N. 305613 B.I.N. 1093572

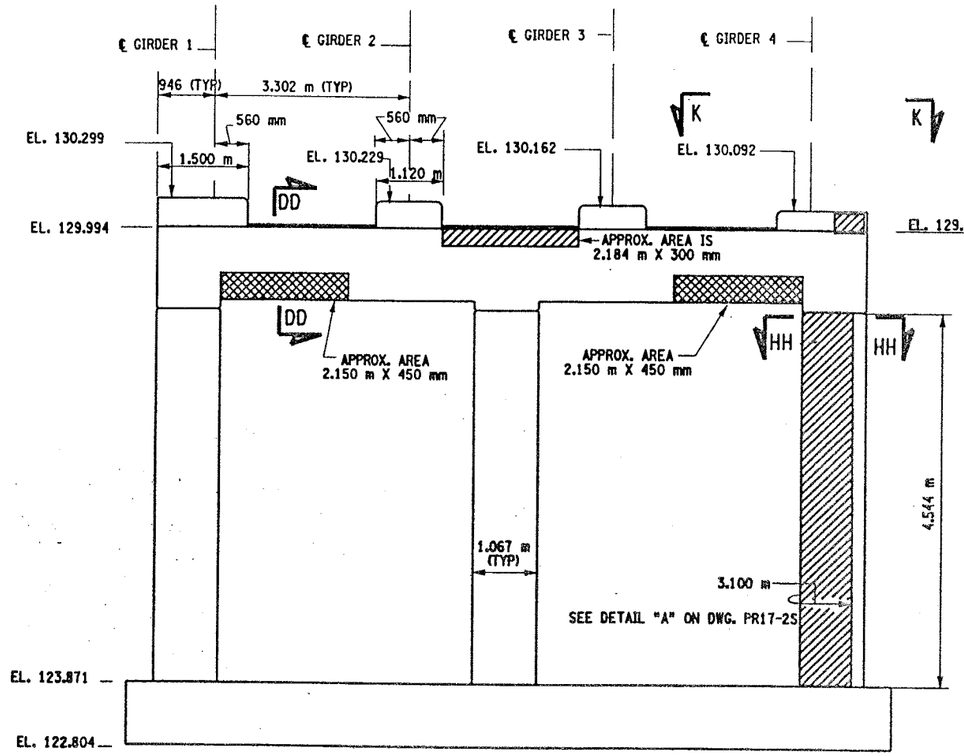

PIER 12 - FRONT FACE (LOOKING NORTH)
BIN 1093572
SCALE: 1 TO 50

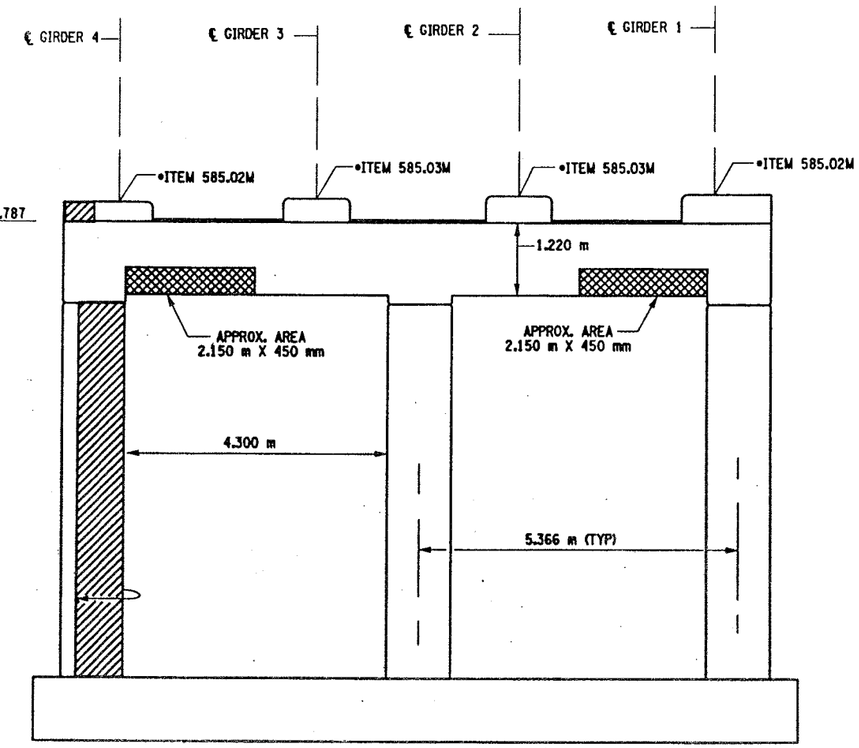

PIER 12 - BACK FACE (LOOKING SOUTH)
BIN 1093572
SCALE: 1 TO 50

NOTES:

1. ALL REINFORCEMENT TO REMAIN.
2. RESTORE TO ORIGINAL DIMENSIONS.
3. PEDESTALS NUMERICALLY NUMBERED FROM WEST TO EAST.
4. FOR THE CONCRETE REPAIR AREAS, THE CONCRETE SHALL BE REMOVED TO AT LEAST 40mm MIN. BEYOND THE ENCOUNTERED REINFORCEMENT AND TO SOUND CONCRETE, A.O.B.E.
5. ELEVATIONS SHOWN ARE FROM ORIGINAL CONTRACT PLANS F.I.S.H. 70-7 AND ARE FOR REFERENCE ONLY.
6. REMOVAL DIMENSIONS SHOWN ON PLANS ARE ESTIMATED AND SHALL BE FIELD VERIFIED BY THE CONTRACTOR PRIOR TO BEGINNING OF REMOVAL OPERATIONS A.O.B.E.
7. PERFORM BEARING RESTORATION TO ALL EXPANSION BEARINGS (TO INCLUDE RESETTING OF UNDEREXTENDED OR OVEREXTENDED BEARINGS). SEE DWG. PR17-1S FOR BEARING RESTORATION NOTES. SEE DWG. BR-10 & BR-11 FOR BEARING RESTORATION DETAILS.
8. SEE DWG PR17-10N FOR SECTION DD-DD.
9. ALL CONCRETE REMOVAL SHALL BE SAWCUT TO PRODUCE NEAT REMOVAL LINES. COST TO BE INCLUDED IN THE PRICE BID FOR ITEM 582.05M AND 582.07M.
10. FOR JACKING NOTES SEE DWG PR17-1S.

• PERFORM STRUCTURAL LIFTING UNDER ITEM 585.02M - STRUCTURAL LIFTING OPERATIONS - TYPE B (LIFTING AT A PIER) OR ITEM 585.03M - STRUCTURAL LIFTING OPERATIONS - TYPE C (LIFTING AT A PIER WHERE THE CONTRACTOR SHALL BE REQUIRED TO LIFT OFF THE FOOTING AND/OR GROUND LEVEL.

JACKING LOADS:

D.L. = 75 MT
L.L. = 50 MT
TOTAL = 125 MT

LEGEND:

ITEM 582.05M - REMOVAL OF STRUCTURAL CONCRETE- REPLACE WITH CLASS A CONCRETE. (CM)

ITEM 582.07M - REMOVAL OF STRUCTURAL CONCRETE - REPLACE WITH VERTICAL OVER-HEAD PATCH MATERIAL. (SM)

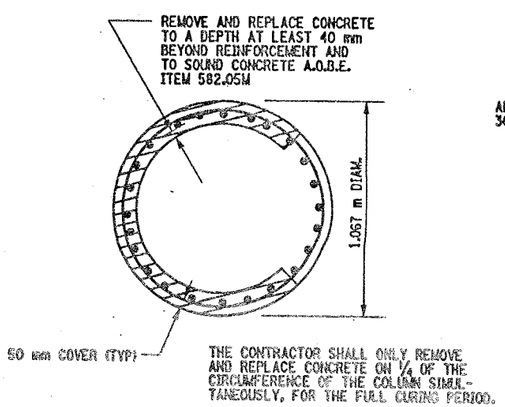

SECTION HH-HH
NOT TO SCALE

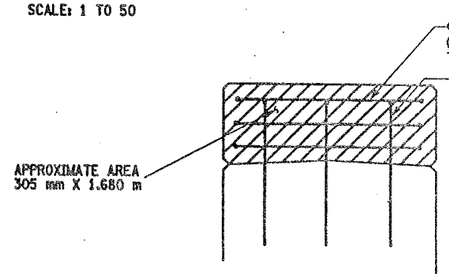

SECTION N-N
NOT TO SCALE

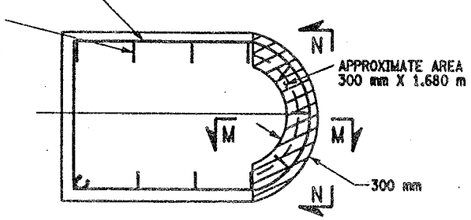

SECTION K-K
NOT TO SCALE

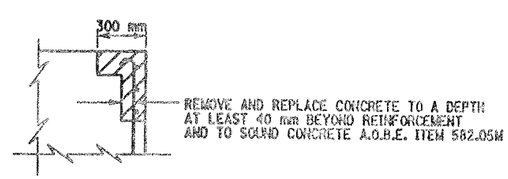

SECTION M-M
NOT TO SCALE

LIST OF ITEMS USED:

ITEM 15565.4302M - BRIDGE BEARING RESTORATION (EA)
ITEM 582.05M - REM. OF STRUC. CONC. - REPLACE WITH CLASS A CONCRETE (CM)
ITEM 582.07M - REM. OF STRUC. CONC. - REPL. W/ VERT. OVERHEAD PATCH MAT'L (SM)
ITEM 585.02M - STRUCTURAL LIFTING OPERATIONS - TYPE B (EA)
ITEM 585.03M - STRUCTURAL LIFTING OPERATION - TYPE C (EA)

ALL DIMENSIONS ARE IN mm UNLESS OTHERWISE NOTED

AS BUILT REVISIONS

SIGNATURE DATE

INTERSTATE 481 NB
OVER
CSX RAILROAD YARD
PIER 12

STATE OF NEW YORK
DEPARTMENT OF TRANSPORTATION

FILENAME	REGION	DATE	DRAWING NO.
305613AE.P12	3	10/02	PR17-12N

DESIGN SUPERVISOR ____ JOB MANAGER ____ DESIGNED BY ____ ESTIMATED BY ____ DRAFTED BY ____ CHECKED BY ____ CHECKED BY ____

FED ROAD REG. NO.	STATE	CONTRACT NO.	SHEET NO.	TOTAL SHEETS
1	N.Y.	D259214	328	432

BRIDGE REHABILITATION PROJECT (ELEMENT SPECIFIC)
VARIOUS BRIDGES ON INTERSTATE 481
TOWNS OF DEWITT AND CICERO
ONONDAGA COUNTY
P.I.N. 305613 B.I.N. 1093572

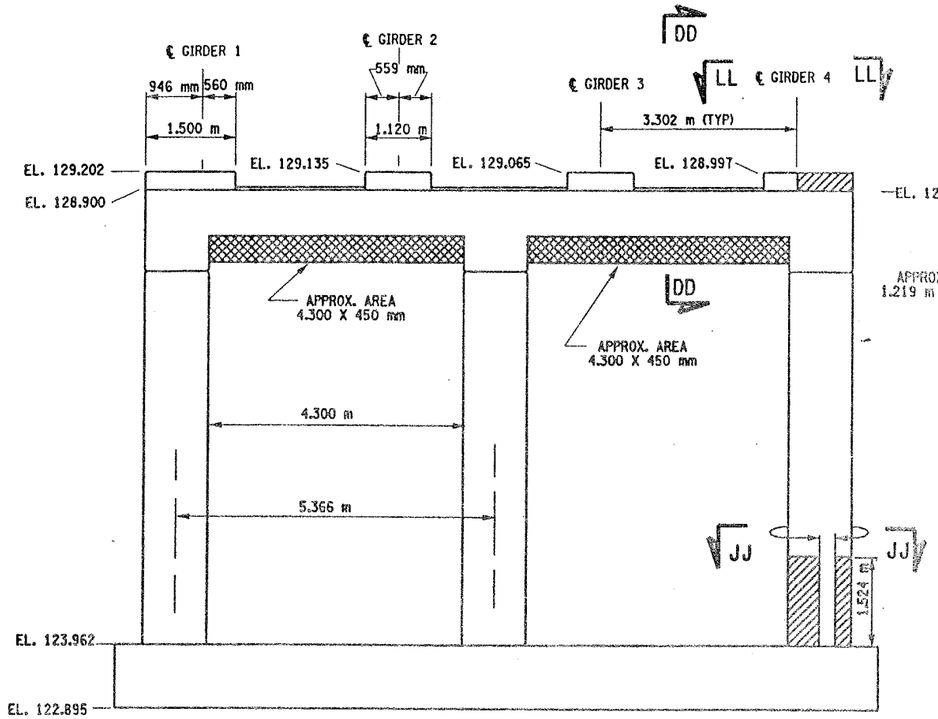

PIER 13 - FRONT FACE (LOOKING NORTH)
BIN 1093572
SCALE: 1 TO 50

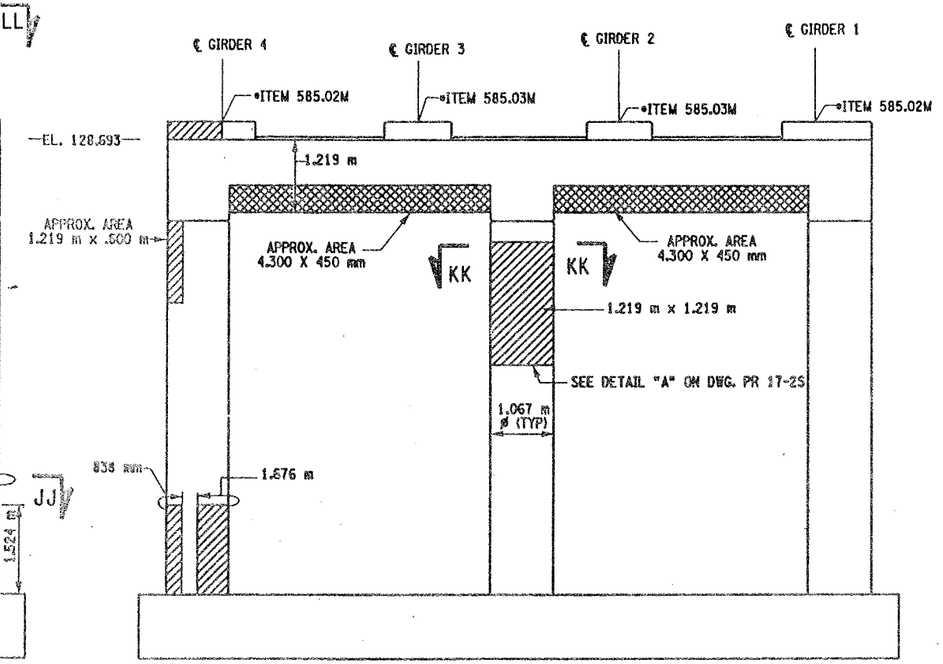

PIER 13- BACK FACE (LOOKING SOUTH)
BIN 1093572
SCALE: 1 TO 50

NOTES:

1. ALL REINFORCEMENT TO REMAIN.
2. RESTORE TO ORIGINAL DIMENSIONS.
3. PEDESTALS NUMERICALLY NUMBERED FROM WEST TO EAST.
4. FOR THE CONCRETE REPAIR AREAS, THE CONCRETE SHALL BE REMOVED TO AT LEAST 40mm MIN. BEYOND THE ENCOUNTERED REINFORCEMENT AND TO SOUND CONCRETE, A.O.B.E.
5. ELEVATIONS SHOWN ARE FROM ORIGINAL CONTRACT PLANS F.I.S.H. 70-7 AND ARE FOR REFERENCE ONLY.
6. REMOVAL DIMENSIONS SHOWN ON PLANS ARE ESTIMATED AND SHALL BE FIELD VERIFIED BY THE CONTRACTOR PRIOR TO BEGINNING OF REMOVAL OPERATIONS A.O.B.E.
7. PERFORM BEARING RESTORATION TO ALL EXPANSION BEARINGS (TO INCLUDE RESETTING OF UNDEREXTENDED OR OVEREXTENDED BEARINGS). SEE DWG. PR17-1S FOR BEARING RESTORATION NOTES. SEE DWG. BR-10 & BR-11 FOR BEARING RESTORATION DETAILS.
8. SEE DWG. PR 17-10N FOR SECTION DD-DD.
9. ALL CONCRETE REMOVAL SHALL BE SAWCUT TO PRODUCE NEAT REMOVAL LINES. COST TO BE INCLUDED IN THE PRICE BID FOR ITEM 582.05M AND 582.07M.
10. FOR JACKING NOTES SEE DWG PR17-1S.

• PERFORM STRUCTURAL LIFTING UNDER ITEM 585.02M - STRUCTURAL LIFTING OPERATIONS - TYPE B (LIFTING AT A PIER) OR ITEM 585.03M - STRUCTURAL LIFTING OPERATIONS - TYPE C (LIFTING AT A PIER WHERE THE CONTRACTOR SHALL BE REQUIRED TO LIFT OFF THE FOOTING AND/OR GROUND LEVEL.

JACKING LOADS:

D.L. = 75 MT
L.L. = 50 MT
TOTAL = 125 MT

LEGEND:

ITEM 582.05M - REMOVAL OF STRUCTURAL CONCRETE- REPLACE WITH CLASS A CONCRETE. (CM)

ITEM 582.07M - REMOVAL OF STRUCTURAL CONCRETE - REPLACE WITH VERTICAL OVER-HEAD PATCH MATERIAL. (SM)

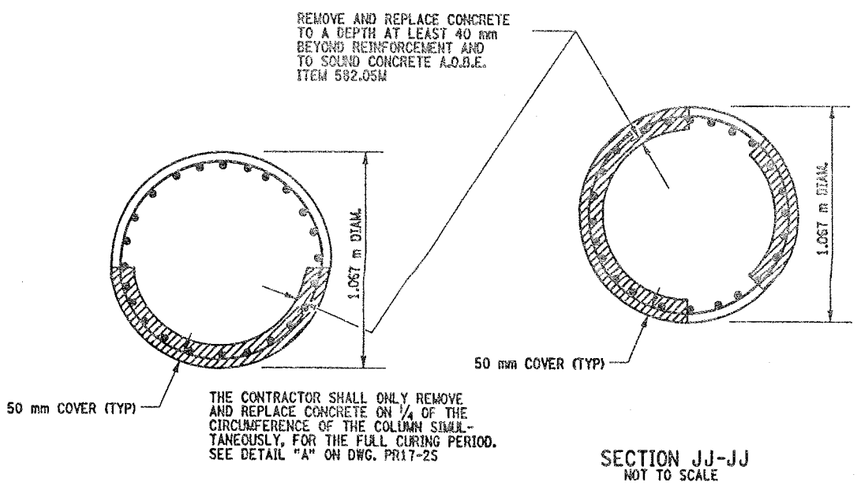

SECTION KK-KK
NOT TO SCALE

SECTION JJ-JJ
NOT TO SCALE

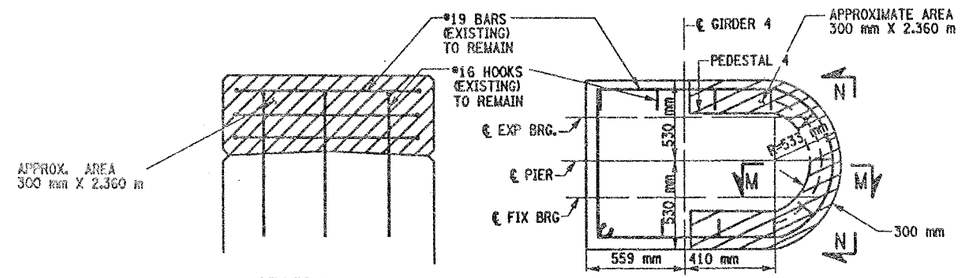

SECTION N-N
NOT TO SCALE

SECTION LL- LL
NOT TO SCALE

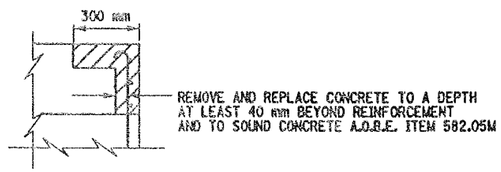

SECTION M-M
NOT TO SCALE

LIST OF ITEMS USED:

ITEM 15565.4302M - BRIDGE BEARING RESTORATION (EA)
ITEM 582.05M - REM. OF STRUC. CONC. - REPLACE WITH CLASS A CONCRETE (CM)
ITEM 582.07M - REM. OF STRUC. CONC. - REPL. W/ VERT. OVERHEAD PATCH MAT.L (SM)
ITEM 585.02M - STRUCTURAL LIFTING OPERATIONS - TYPE B (EA)
ITEM 585.03M - STRUCTURAL LIFTING OPERATION - TYPE C (EA)

ALL DIMENSIONS ARE IN mm UNLESS OTHERWISE NOTED

AS BUILT REVISIONS

SIGNATURE DATE

INTERSTATE 481 NB
OVER
CSX RAILROAD YARD
PIER 13

STATE OF NEW YORK
DEPARTMENT OF TRANSPORTATION

FILENAME	REGION	DATE	DRAWING NO.
305613AE.P13	3	10/02	PR17-13N

DESIGN SUPERVISOR ____ JOB MANAGER ____ DESIGNED BY ____ CHECKED BY ____ ESTIMATED BY ____ DRAFTED BY ____ CHECKED BY ____

FED ROAD REG. NO.	STATE	CONTRACT NO.	SHEET NO.	TOTAL SHEETS
1	N.Y.	D259214	329	432

BRIDGE REHABILITATION PROJECT (ELEMENT SPECIFIC)
VARIOUS BRIDGES ON INTERSTATE 481
TOWNS OF DEWITT AND CICERO
ONONDAGA COUNTY
P.I.N. 305613 B.I.N. 1093572

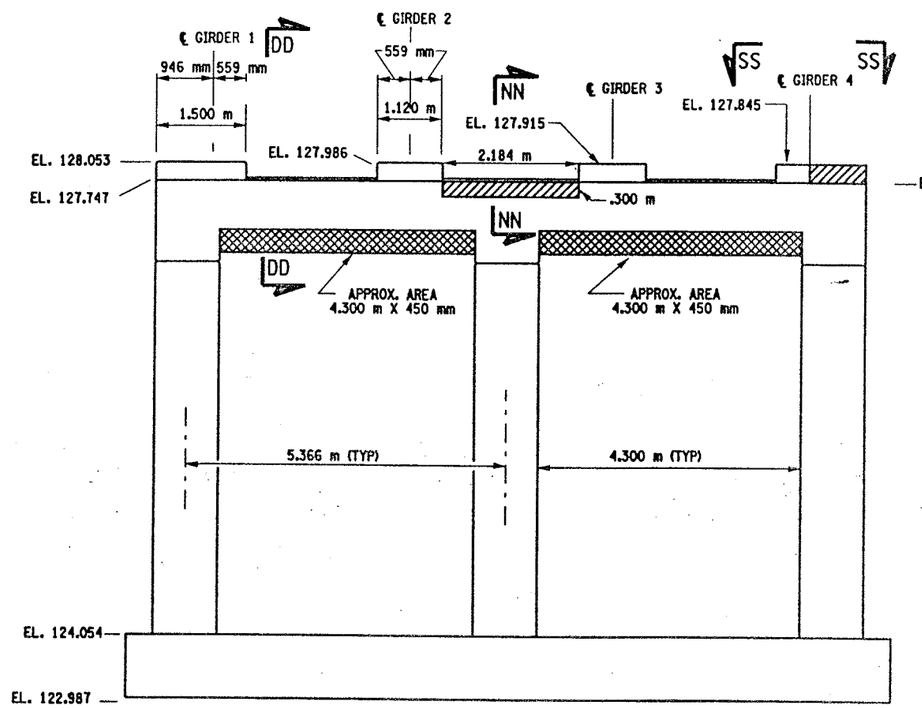

PIER 14 - FRONT FACE (LOOKING NORTH)
BIN 1093572
SCALE: 1 TO 50

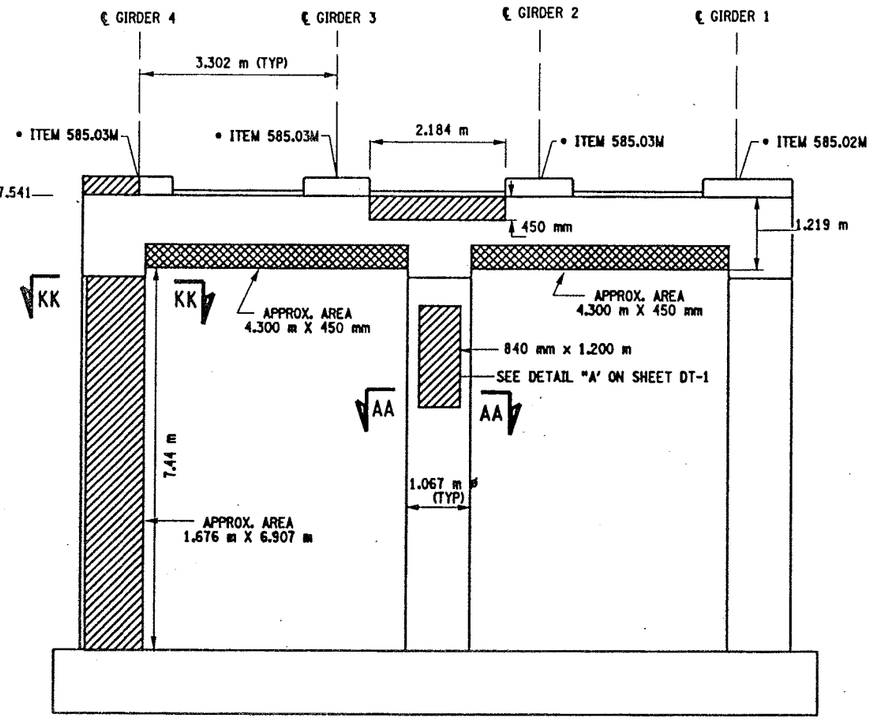

PIER 14 - BACK FACE (LOOKING SOUTH)
BIN 1093572
SCALE: 1 TO 50

NOTES:

1. ALL REINFORCEMENT TO REMAIN.
2. RESTORE TO ORIGINAL DIMENSIONS.
3. PEDESTALS NUMERICALLY NUMBERED FROM WEST TO EAST.
4. FOR THE CONCRETE REPAIR AREAS, THE CONCRETE SHALL BE REMOVED TO AT LEAST 40mm MIN. BEYOND THE ENCOUNTERED REINFORCEMENT AND TO SOUND CONCRETE, A.O.B.E.
5. ELEVATIONS SHOWN ARE FROM ORIGINAL CONTRACT PLANS F.I.S.H. 70-7 AND ARE FOR REFERENCE ONLY.
6. REMOVAL DIMENSIONS SHOWN ON PLANS ARE ESTIMATED AND SHALL BE FIELD VERIFIED BY THE CONTRACTOR PRIOR TO BEGINNING OF REMOVAL OPERATIONS A.O.B.E.
7. PERFORM BEARING RESTORATION TO ALL EXPANSION BEARINGS (TO INCLUDE RESETTING OF UNDEREXTENDED OR OVEREXTENDED BEARINGS). SEE DWG. PR17-1S FOR BEARING RESTORATION NOTES. SEE DWG. BR-10 & BR-11 FOR BEARING RESTORATION DETAILS.
8. SEE DWG. PR17-10N FOR SECTION DD-DD.
9. SEE DWG. PR17-7N FOR SECTION AA-AA.
10. SEE DWG. PR17-13N FOR SECTION KK-KK.
11. ALL CONCRETE REMOVAL SHALL BE SAWCUT TO PRODUCE NEAT REMOVAL LINES. COST TO BE INCLUDED IN THE PRICE BID FOR ITEM 582.05M AND ITEM 582.07M.
12. FOR JACKING NOTES SEE DWG PR17-1S.

• PERFORM STRUCTURAL LIFTING UNDER ITEM 585.02M - STRUCTURAL LIFTING OPERATIONS - TYPE B (LIFTING AT A PIER) OR ITEM 585.03M - STRUCTURAL LIFTING OPERATIONS - TYPE C (LIFTING AT A PIER WHERE THE CONTRACTOR SHALL BE REQUIRED TO LIFT OFF THE FOOTING AND/OR GROUND LEVEL.

JACKING LOADS:

D.L. = 75 MT
L.L. = 50 MT
TOTAL = 125 MT

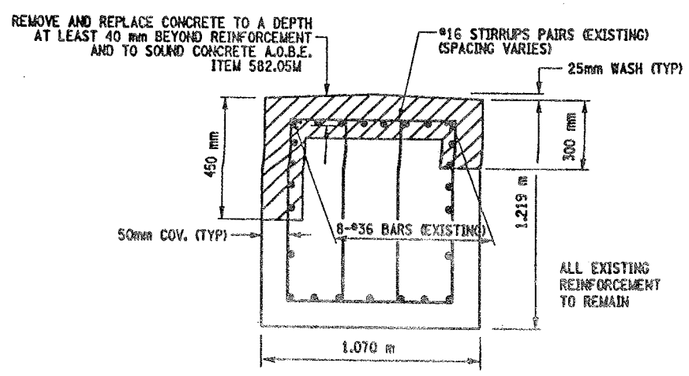

SECTION NN-NN
NOT TO SCALE

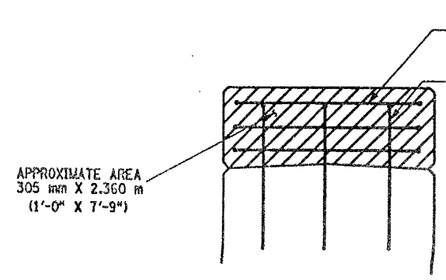

SECTION N-N
NOT TO SCALE

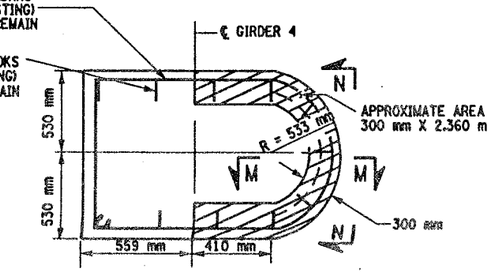

SECTION SS-SS
NOT TO SCALE

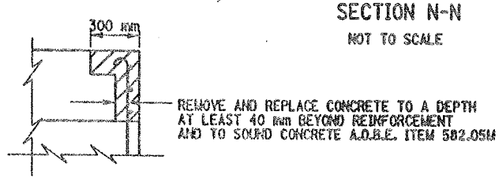

SECTION M-M
NOT TO SCALE

LIST OF ITEMS USED:

ITEM 15565.4302M - BRIDGE BEARING RESTORATION (EA)
ITEM 582.05M - REM. OF STRUC. CONC. - REPLACE WITH CLASS A CONCRETE (CM)
ITEM 582.07M - REM. OF STRUC. CONC. - REPL. W/ VERT. OVERHEAD PATCH MAT'L. (SM)
ITEM 585.02M - STRUCTURAL LIFTING OPERATIONS - TYPE B (EA)
ITEM 585.03M - STRUCTURAL LIFTING OPERATION - TYPE C (EA)

LEGEND:

ITEM 582.05M - REMOVAL OF STRUCTURAL CONCRETE- REPLACE WITH CLASS A CONCRETE. (CM)

ITEM 582.07M - REMOVAL OF STRUCTURAL CONCRETE - REPLACE WITH VERTICAL OVER-HEAD PATCH MATERIAL. (SM)

ALL DIMENSIONS ARE IN mm UNLESS OTHERWISE NOTED

AS BUILT REVISIONS

SIGNATURE DATE

INTERSTATE 481 NB
OVER
CSX RAILROAD YARD
PIER 14

STATE OF NEW YORK
DEPARTMENT OF TRANSPORTATION

FILENAME	REGION	DATE	DRAWING NO.
305613AE.P14	3	10/02	PR17-14N

CHECKED BY
DRAFTED BY
ESTIMATED BY
CHECKED BY
DESIGNED BY
JOB MANAGER
DESIGN SUPERVISOR

FED ROAD REG. NO.	STATE	CONTRACT NO.	SHEET NO.	TOTAL SHEETS
1	N.Y.	D259214	330	432

BRIDGE REHABILITATION PROJECT (ELEMENT SPECIFIC)
VARIOUS BRIDGES ON INTERSTATE 481
TOWNS OF DEWITT AND CICERO
ONONDAGA COUNTY
P.I.N. 305613 B.I.N. 1093571 & 1093572

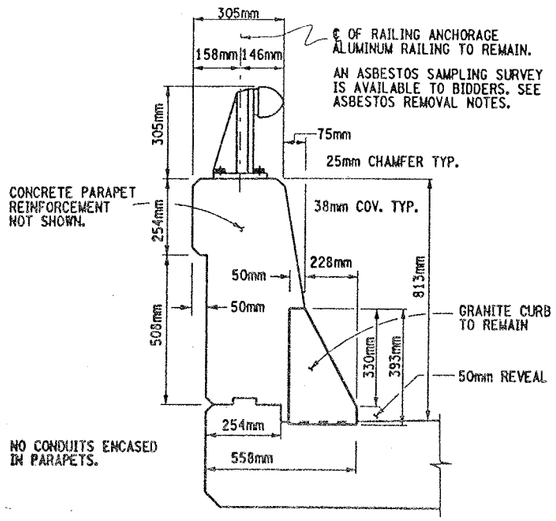

TYPICAL SECTION THRU SUPERSTRUCTURE
PARAPET CONCRETE DETAILS

NOT TO SCALE

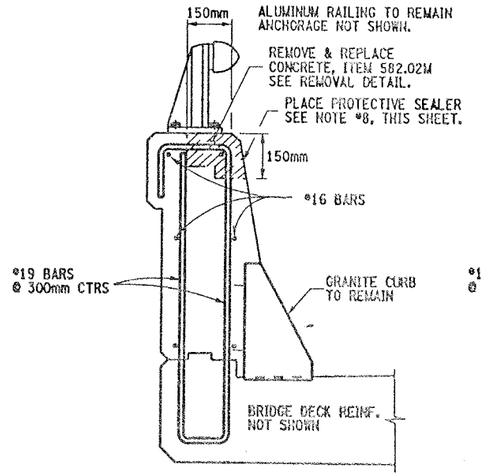

(I) REPAIR DETAILS
150mmX150mm TOP

NOT TO SCALE

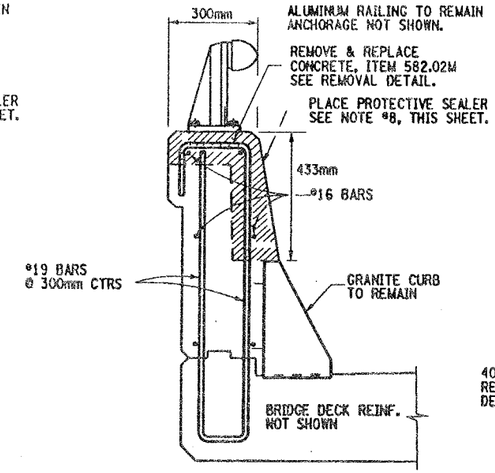

(II) REPAIR DETAILS
FULL TOP & FRONT FACE

NOT TO SCALE

CONCRETE REMOVAL NOTES:

REMOVE ALL DETERIORATED CONCRETE TO SOUND CONCRETE AND AT LEAST 40mm BEYOND ENCOUNTERED REINFORCEMENT BARS, AOBE. PAYMENT TO BE PAID UNDER ITEM 582.05M.

CONCRETE REMOVAL, SAWCUT 6mm DEPTH MINIMUM TO PRODUCE NEAT REMOVAL LINES, ALL COSTS SHALL BE INCLUDED IN PRICE BID FOR ITEM 582.05M.

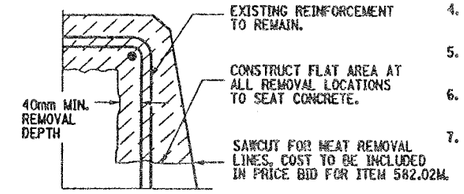

TYPICAL REMOVAL DETAIL

NOT TO SCALE

CONCRETE PARAPET REPAIR NOTES:

1. ALUMINUM RAILING TO REMAIN, ANCHORAGE NOT SHOWN.
2. EXISTING PARAPET REINFORCEMENT TO REMAIN.
3. GRANITE CURB TO REMAIN, ANCHOR BARS NOT SHOWN.
4. REMOVAL OF CONCRETE TO LIMITS SHOWN, AOBE. SEE TYPICAL REMOVAL DETAIL, THIS SHEET.
5. ALL DIMENSIONS SHOWN FOR CONCRETE REMOVAL ARE APPROXIMATE AND SHALL BE FIELD VERIFIED.
6. CONTRACTOR SHALL RESTORE CONCRETE PARAPET TO ORIGINAL DIMENSIONS.
7. IT IS DESIRABLE TO RETAIN ALL EXISTING GRANITE CURB, BUT AT SOME LOCATIONS ADJACENT TO THE JOINT BLOCK-OUTS IT MAY BE NECESSARY TO REPLACE OR REPAIR THE SECTION OF CURB, TO THE SATISFACTION OF THE ENGINEER. COST TO BE INCLUDE IN PRICE BID FOR ITEM 582.05M.
8. AFTER PARAPET REPAIRS ARE COMPLETED AND SUFFICIENT CURE TIME AS DECIDED BY ENGINEER, APPLY A COATING TYPE PROTECTIVE SEALERS WHICH MEETS MATERIAL SPECIFICATION 717-04. THIS PROTECTIVE SEALER SHALL BE APPLIED TO THE FRONT FACE AND TOP OF ALL PARAPETS (REPAIRED AREAS & ORIGINAL AREAS) TO ENSURE A UNIFORMED APPEARANCE. COST OF THIS SEALER TO BE INCLUDED IN PRICE BID FOR ITEM 18559.1696 M.

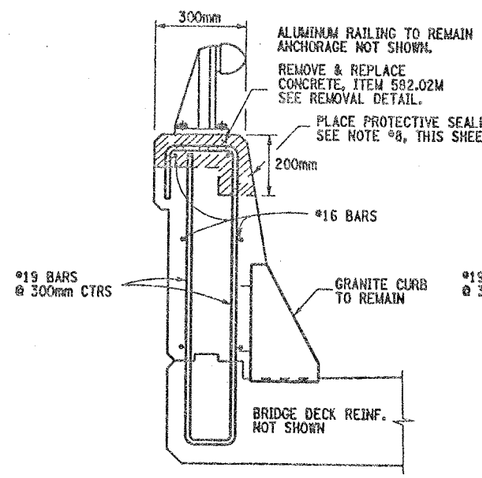

(III) REPAIR DETAILS
FULL TOP & 200mm FACE

NOT TO SCALE

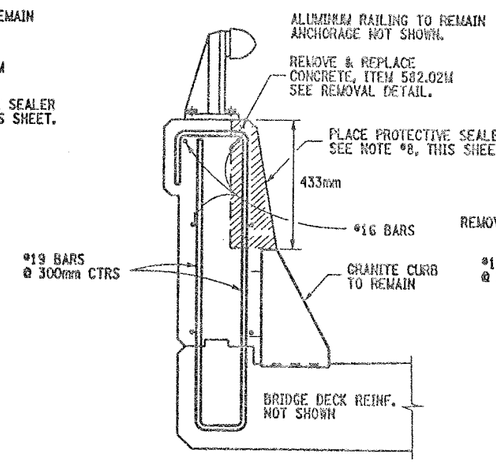

(IV) REPAIR DETAILS
FRONT FACE

NOT TO SCALE

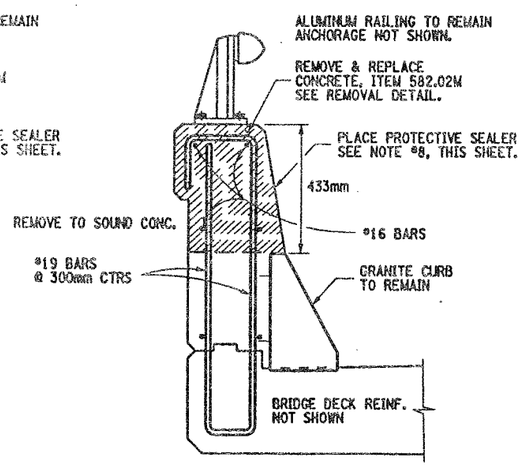

(V) REPAIR DETAILS
FULL SECTION

NOT TO SCALE

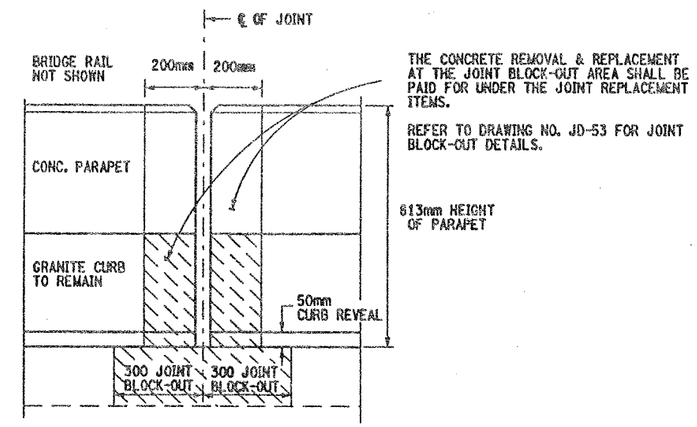

THE CONCRETE REMOVAL & REPLACEMENT AT THE JOINT BLOCK-OUT AREA SHALL BE PAID FOR UNDER THE JOINT REPLACEMENT ITEMS.

REFER TO DRAWING NO. JD-53 FOR JOINT BLOCK-OUT DETAILS.

FRONT FACE PARAPET CONCRETE DETAIL
SHOWS TYPICAL CONC. REMOVAL AT JOINT

NOT TO SCALE

ASBESTOS MATERIAL REMOVAL NOTES:

THE REMOVAL OF ALL ASBESTOS CONTAINING CAULK (ITEM 210.5433M) SHALL BE COMPLETED PRIOR TO COMMENCEMENT OF ANY PARAPET REPAIR WORK.

THIS REMOVAL OF THE ASBESTOS CAULK SHALL BE PERFORMED AT EACH BRIDGE RAIL BASE PLATE ON BOTH N.B. & S.B. BRIDGES. (REMOVE ASBESTOS CALKING AT ALL RAIL BASE PLATES BOTH BRIDGES)

AFTER COMPLETION OF THE PARAPET REPAIRS INSTALL A CAULKING COMPOUND AROUND THE BASE PLATES OF THE RAILING WHICH MEETS MATERIAL SPECIF. 705-06 AND IS ACCEPTABLE TO THE ENGINEER. PAID UNDER ITEM 210.5433M.

REFER TO ORIGINAL CONTRACT PLANS F.I.S.H. 70-7 FOR RAIL LAY-OUT DETAILS.

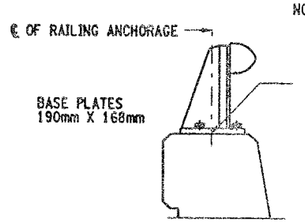

REMOVE EXISTING GRAY ASBESTOS CAULKING COMPOUND AT THE ALUMINUM RAILING BASE PLATES. IT IS ASSUMED THAT THE CAULK COMPOUND IS SURROUNDING (PERIMETER) THE RAILING BASE PLATES. THIS PERIMETER REMOVAL OPERATION SHALL BE PERFORM AT EACH RAILING BASE PLATE ON BOTH STRUCTURES.

HOWEVER, SOME CAULK MATERIAL MAY BE FOUND UNDER THE RAILING BASE PLATES. THIS CAULKING COMPOUND UNDER THE BASE PLATES SHALL BE REMOVED ONLY AT LOCATIONS WHERE THE PARAPET CONCRETE REPAIRS WILL DISTURB THE MATERIAL (REMOVAL AS ENCOUNTERED).

ALL COSTS TO BE PAID UNDER ITEM 210.5433M. SEE ASBESTOS MATERIAL REMOVAL NOTES, THIS SHEET.

TYPICAL BRIDGE RAIL DETAIL

NOT TO SCALE

ITEMS USED:

ITEM 582.05M	- REMOVAL OF STRUCTURAL CONCRETE REPLACE WITH CLASS "A" CONCRETE (CM)
ITEM 210.5433M	- REMOVAL & DISPOSAL OF ASBESTOS CONTAINING CAULK (BV 12) (L.S)
ITEM 18559.1696M	- PROTECTIVE SEALING OF STRUCTURAL CONCRETE (SM)

ALL DIMENSIONS ARE IN mm UNLESS OTHERWISE NOTED

AS BUILT REVISIONS

SIGNATURE DATE

INTERSTATE 481 OVER CSX RR YARD

PARAPET REPAIR DETAILS

STATE OF NEW YORK
DEPARTMENT OF TRANSPORTATION

FILENAME	REGION	DATE	DRAWING NO.
305613AB.R1A	3	10/02	PW17-1

ESTIMATED BY ____ CHECKED BY ____
DRAFTED BY ____ CHECKED BY ____
DESIGNED BY ____
JOB MANAGER ____
DESIGN SUPERVISOR ____

FED ROAD REG. NO.	STATE	CONTRACT NO.	SHEET NO.	TOTAL SHEETS
1	N.Y.	D259214	331	432

BRIDGE REHABILITATION PROJECT (ELEMENT SPECIFIC)
VARIOUS BRIDGES ON INTERSTATE 481
TOWNS OF DEWITT AND CICERO
ONONDAGA COUNTY
P.I.N. 305613 B.I.N. 1093571 & 1093572

PARAPET REPAIR TABLE (ITEM 582.05M)

BIN 1093571	STATION TO STATION	RIGHT SIDE (EAST)	LEFT SIDE (WEST)	REMARKS
SPAN 1	6+626.288 TO 6+627.588	1.300m		(I) REPAIR PROCEDURE
	6+653.795 TO 6+654.495	.700m		(V) REPLACE FULL SECTION
	6+653.595 TO 6+654.495		.900m	(V) REPLACE FULL SECTION
SPAN 2	6+654.895 TO 6+655.505	.600m		(V) REPLACE FULL SECTION
	6+654.895 TO 6+655.505		.600m	(V) REPLACE FULL SECTION
	6+654.895 TO 6+664.895	10.000m		(I) REPAIR PROCEDURE
	6+669.995 TO 6+673.695	3.700m		(I) REPAIR PROCEDURE
SPAN 3	6+731.266 TO 6+735.466	4.200m		(I) REPAIR PROCEDURE
	6+753.266 TO 6+754.266	1.000m		(V) REPLACE FULL SECTION
	6+753.266 TO 6+754.266		1.000m	(V) REPLACE FULL SECTION
SPAN 4	6+754.666 TO 6+755.666	1.000m		(V) REPLACE FULL SECTION
	6+760.466 TO 6+769.866		9.400m	(I) REPAIR PROCEDURE
	6+760.666 TO 6+778.966	18.300m		(I) REPAIR PROCEDURE*
	6+790.116 TO 6+791.616		1.500m	(I) REPAIR PROCEDURE (BACKFACE)
	6+789.316 TO 6+801.316	12.000m		(I) REPAIR PROCEDURE
	6+794.116 TO 6+803.616		9.500m	(III) REPAIR PROCEDURE
	6+813.616 TO 6+814.616	1.000m		(V) REPLACE FULL SECTION
	6+813.616 TO 6+814.616		1.000m	(IV) REPAIR PROCEDURE
SPAN 5	6+815.016 TO 6+816.016	1.000m		(V) REPLACE FULL SECTION
	6+823.166 TO 6+871.166	48.000m		(I) REPAIR PROCEDURE
	6+870.966 TO 6+874.966	4.000m		(V) REPLACE FULL SECTION
SPAN 6	6+875.366 TO 6+876.366	1.000m		(V) REPLACE FULL SECTION
	6+875.366 TO 6+895.366		20.000m	(IV) REPAIR PROCEDURE
	6+875.317 TO 6+935.317	60.000m		(III) REPAIR PROCEDURE
	6+908.317 TO 6+914.317		6.000m	(IV) REPAIR PROCEDURE
	6+920.517 TO 6+928.517		8.000m	(IV) REPAIR PROCEDURE
	6+923.317 TO 6+935.317		12.000m	(IV) REPAIR PROCEDURE
SPAN 7	6+935.717 TO 6+947.217	11.500m		(IV) REPAIR PROCEDURE
	6+949.917 TO 6+951.417	1.500m		(I) REPAIR PROCEDURE
	6+952.112 TO 6+967.112		15.000m	(IV) REPAIR PROCEDURE
	6+967.012 TO 6+969.612	2.600m		(IV) REPAIR PROCEDURE
SPAN 8	6+973.512 TO 7+010.907	37.400m		(I) REPAIR PROCEDURE
	6+981.907 TO 6+990.407		8.500m	(IV) REPAIR PROCEDURE
	6+996.907 TO 7+010.907		14.000m	(IV) REPAIR PROCEDURE
SPAN 9	7+011.307 TO 7+048.702		37.400m	(II) REPAIR PROCEDURE
SPAN 10	7+070.325 TO 7+074.325		4.000m	(IV) REPAIR PROCEDURE
SPAN 11	7+091.825 TO 7+098.825	7.000m		(I) REPAIR PROCEDURE
	7+102.525 TO 7+106.025	3.500m		(I) REPAIR PROCEDURE
	7+100.325 TO 7+108.325		8.000m	(I) REPAIR PROCEDURE
	7+109.325 TO 7+110.825	1.500m		(I) REPAIR PROCEDURE
	7+112.725 TO 7+128.725		16.000m	(I) REPAIR PROCEDURE
	7+114.825 TO 7+117.825	3.000m		(I) REPAIR PROCEDURE
SPAN 12	7+129.125 TO 7+166.825		37.700m	(II) REPAIR PROCEDURE
	7+131.925 TO 7+137.925	6.000m		(III) REPAIR PROCEDURE
	7+158.025 TO 7+159.525	1.500m		(III) REPAIR PROCEDURE
SPAN 13	7+167.225 TO 7+204.925	37.700m		(I) REPAIR PROCEDURE
	7+172.225 TO 7+184.225		12.000m	(I) REPAIR PROCEDURE
	7+189.925 TO 7+204.925		15.000m	(I) REPAIR PROCEDURE
SPAN 14	7+205.325 TO 7+243.025	37.700m		(I) REPAIR PROCEDURE
	7+205.325 TO 7+243.025		37.700m	(II) REPAIR PROCEDURE
SPAN 15	7+243.425 TO 7+281.530		38.100m	(II) REPAIR PROCEDURE
	7+248.530 TO 7+254.330	5.800m		(III) REPAIR PROCEDURE
	7+257.430 TO 7+262.030	4.600m		(I) REPAIR PROCEDURE
	7+265.030 TO 7+266.530	1.500m		(I) REPAIR PROCEDURE
	7+268.230 TO 7+271.730	3.500m		(I) REPAIR PROCEDURE

* FULL SECTION REPLACEMENT AS DIRECTED BY ENGINEER TO INCLUDE IF NECESSITY, REPLACEMENT OR REPAIR OF THE GRANITE CURB. ALL COST TO BE INCLUDED IN BID PRICE FOR ITEM 582.05M.

(BACKFACE) INDICATES REPAIR AREA IS ON THE OUTSIDE OR BACKFACE OF PARAPET. CAUTION MUST BE TAKEN WHEN WORKING OVER R.R. TRACKS.

PARAPET REPAIR TABLE (ITEM 582.05M)

BIN 1093572	STATION TO STATION	RIGHT SIDE (EAST)	LEFT SIDE (WEST)	REMARKS
SPAN 1	6+578.084 TO 6+582.084	4.000m		(I) REPAIR PROCEDURE
	6+592.589 TO 6+594.789	2.200m		(I) REPAIR PROCEDURE
	6+593.884 TO 6+600.884		7.000m	(I) REPAIR PROCEDURE (BACKFACE)
	6+597.489 TO 6+599.489	2.000m		(I) REPAIR PROCEDURE
	6+600.581 TO 6+608.297	7.700m		(I) REPAIR PROCEDURE
	6+602.697 TO 6+608.297		5.600m	(I) REPAIR PROCEDURE (BACKFACE)
SPAN 2	6+608.697 TO 6+620.197		11.500m	(I) REPAIR PROCEDURE (BACKFACE)
	6+639.497 TO 6+641.497		2.000m	(I) REPAIR PROCEDURE (BACKFACE)
	6+646.997 TO 6+653.497		6.500m	(I) REPAIR PROCEDURE (BACKFACE)
SPAN 3	6+662.597 TO 6+664.597		2.000m	(II) REPAIR PROCEDURE
	6+676.097 TO 6+684.097	8.000m		(I) REPAIR PROCEDURE
	6+697.097 TO 6+698.097	1.000m		(I) REPAIR PROCEDURE
	6+707.070 TO 6+708.070	1.000m		(V) REPLACE FULL SECTION *
	6+707.070 TO 6+708.070		1.000m	(V) REPLACE FULL SECTION *
SPAN 4	6+708.470 TO 6+709.470	1.000m		(V) REPLACE FULL SECTION
	6+715.570 TO 6+757.070	41.500m		(I) REPAIR PROCEDURE
	6+719.070 TO 6+728.070		9.000m	(I) REPAIR PROCEDURE
	6+750.420 TO 6+768.420		18.000m	(III) REPAIR PROCEDURE
	6+767.420 TO 6+768.420		1.000m	(V) REPLACE FULL SECTION
SPAN 5	6+768.820 TO 6+770.320	1.500m		(V) REPLACE FULL SECTION
	6+773.120 TO 6+786.120	13.000m		(I) REPAIR PROCEDURE
	6+778.920 TO 6+783.220		4.300m	(I) REPAIR PROCEDURE
	6+799.620 TO 6+802.120		2.500m	(I) REPAIR PROCEDURE
	6+804.620 TO 6+815.620	11.000m		(I) REPAIR PROCEDURE
	6+826.771 TO 6+828.771		2.000m	(V) REPLACE FULL SECTION
SPAN 6	6+829.171 TO 6+830.171	1.000m		(V) REPLACE FULL SECTION
	6+829.171 TO 6+830.171		1.000m	(V) REPLACE FULL SECTION
	6+830.171 TO 6+888.771		58.600m	(II) REPAIR PROCEDURE
	6+846.971 TO 6+849.971	3.000m		(I) REPAIR PROCEDURE
	6+855.621 TO 6+889.121	33.500m		(I) REPAIR PROCEDURE
SPAN 7	6+889.126 TO 6+926.916	37.400m		(I) REPAIR PROCEDURE
	6+892.221 TO 6+897.521		5.300m	(I) REPAIR PROCEDURE
	6+903.321 TO 6+907.621		4.300m	(I) REPAIR PROCEDURE
	6+909.721 TO 6+911.721		2.000m	(I) REPAIR PROCEDURE
	6+916.916 TO 6+926.916		10.000m	(III) REPAIR PROCEDURE
SPAN 8	6+927.316 TO 6+964.712	37.400m		(IV) REPAIR PROCEDURE
SPAN 9	6+965.112 TO 6+996.112	31.000m		(I) REPAIR PROCEDURE
SPAN 10	7+014.602 TO 7+023.602		9.000m	(II) REPAIR PROCEDURE
	7+020.302 TO 7+040.302	20.000m		(II) REPAIR PROCEDURE
SPAN 11	7+044.302 TO 7+046.302		2.000m	(I) REPAIR PROCEDURE
	7+060.397 TO 7+067.697	7.300m		(I) REPAIR PROCEDURE
SPAN 12	7+099.892 TO 7+101.892	2.000m		(I) REPAIR PROCEDURE
SPAN 13	7+119.492 TO 7+125.492		6.000m	(I) REPAIR PROCEDURE
	7+168.283 TO 7+186.283		18.000m	(I) REPAIR PROCEDURE
	7+168.983 TO 7+191.483	22.500m		(I) REPAIR PROCEDURE
SPAN 14	7+171.093 TO 7+191.483	20.400m		(I) REPAIR PROCEDURE
	7+165.783 TO 7+179.283		13.500m	(I) REPAIR PROCEDURE
SPAN 15	7+197.883 TO 7+199.883		2.000m	(I) REPAIR PROCEDURE
	7+198.283 TO 7+229.683	31.400m		(I) REPAIR PROCEDURE

GENERAL NOTES:

WORK ADJACENT TO JOINT BLOCK-OUT (200mm) SHALL BE INCLUDED IN THE BRIDGE JOINT REPLACEMENT ITEMS. SEE DRAWING NO. JD-53 FOR JOINT BLOCK-OUT REMOVAL DETAILS.

SOME REPAIRS ARE ON THE BACK FACE OF THE PARAPETS SOME OF THIS WORK MAY BE OVER THE RAIL ROAD TRACKS.

REFER TO DRAWING NO. PW17-1 FOR CONCRETE REMOVAL DETAILS AND NOTES.

STATIONING AND DIMENSIONS SHOWN FOR CONCRETE REMOVAL ARE APPROXIMATE AND SHALL BE FIELD VERIFIED BY CONTRACTOR AND ENGINEER.

REFER TO RECONSTRUCTION NOTES ON DRAWING NO. GN-1.

ALL DIMENSIONS ARE IN m UNLESS OTHERWISE NOTED

AS BUILT REVISIONS

SIGNATURE DATE

INTERSTATE 481
OVER
CSX RAILROAD YARD

TABLE OF PARAPET REPAIRS

STATE OF NEW YORK
DEPARTMENT OF TRANSPORTATION

FILENAME	REGION	DATE	DRAWING NO.
305613AB.R1A	3	10/02	PW17-2

ESTIMATED BY ____ DRAFTED BY ____ CHECKED BY ____
DESIGNED BY ____ CHECKED BY ____
JOB MANAGER ____
DESIGN SUPERVISOR ____

FED ROAD REG. NO.	STATE	CONTRACT NO.	SHEET NO.	TOTAL SHEETS
1	N.Y.	D259214	332	432

BRIDGE REHABILITATION PROJECT (ELEMENT SPECIFIC)
VARIOUS BRIDGES ON INTERSTATE 481
TOWNS OF DEWITT AND CICERO
ONONDAGA COUNTY
P.I.N. 305613 B.I.N. 1093572

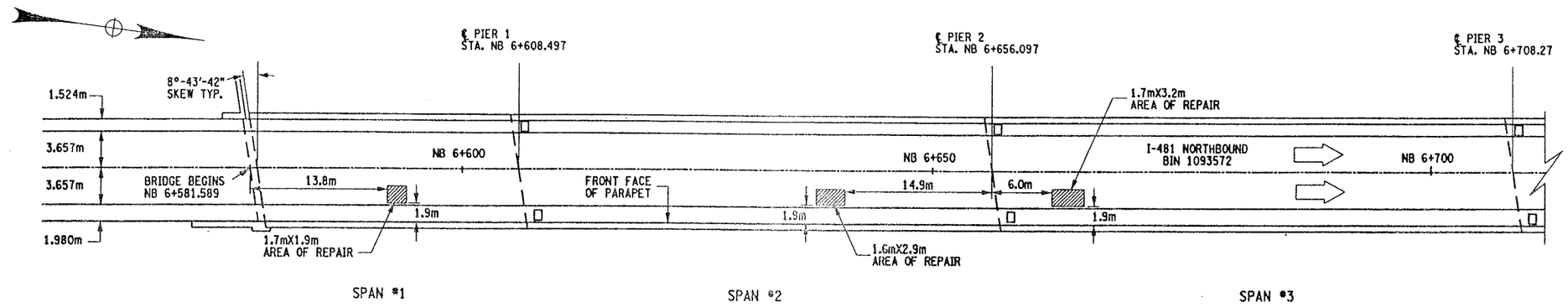

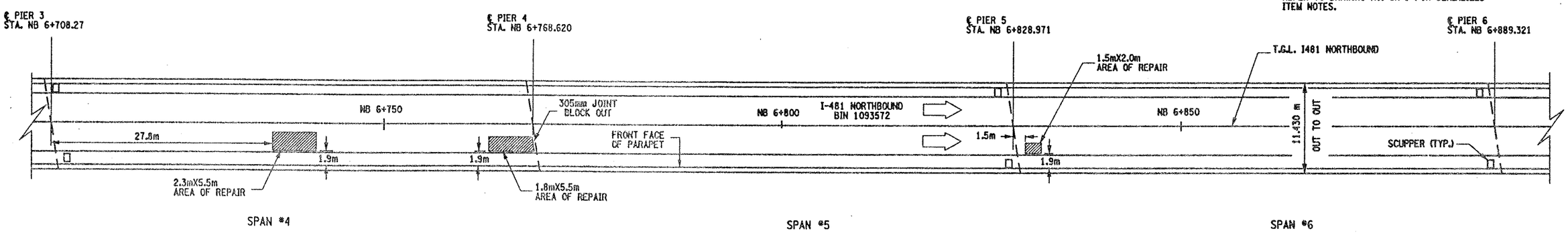

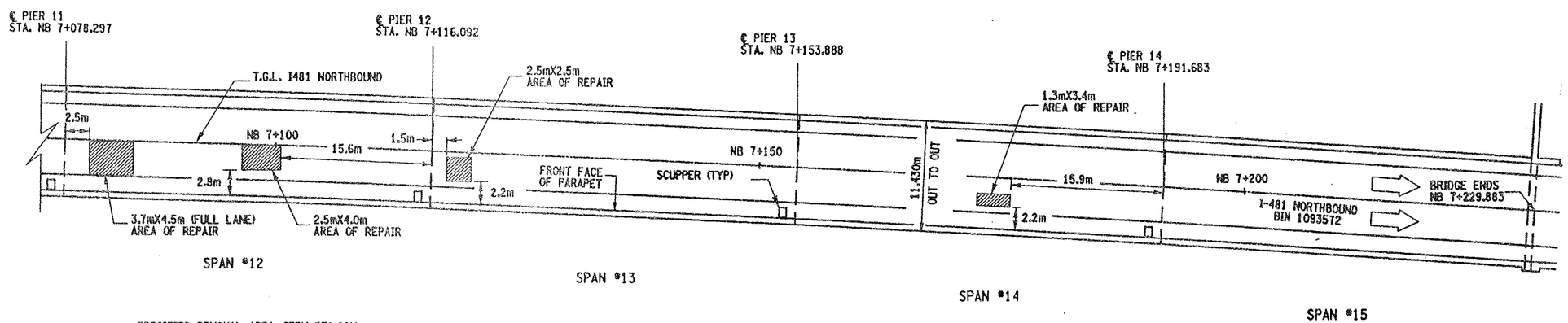

PLAN VIEW OF SPOT DECK REPAIRS

NOT TO SCALE

ALL DIMENSIONS ARE IN m UNLESS OTHERWISE NOTED

GENERAL NOTES:

THIS WORK ONLY PERTAINS TO BIN 1093572 NB.

THE AREAS SHOWN ARE THE RESULTS OF FIELD INVESTIGATIONS AND ARE ONLY APPROXIMATE. THE ACTUAL LIMITS SHALL BE AS DIRECTED BY ENGINEER.

NO FULL DEPTH SLAB REPAIRS ARE EXPECTED AT THESE LOCATIONS.

REFER TO DRAWING NO. GN-1 FOR SERIALIZED ITEM NOTES.

REMOVAL NOTES:

ORIGINAL BRIDGE DECK 203mm MONOLITHIC SLAB. A 38mm CONC. OVERLAY HAS BEEN ADDED.

THESE LOCATIONS ARE CURRENTLY FILLED WITH ASPHALT (BLACKTOP). DEPTH OF ASPHALT IS UNKNOWN, ESTIMATED AT @ 38mm. THE REMOVAL OF THE ASPHALT AND CONCRETE TO LIMITS SHOWN TO BE PAID UNDER ITEM 579.02M.

REMOVE CONCRETE TO LIMITS SHOWN AND TO SOUND CONCRETE, AS ORDER BY ENGINEER.

ALL AREAS THAT ARE REPAIRED SHALL ALSO RECEIVE ITEM 558.01 - TRANSVERSE SAWCUT GROOVING AND ITEM 18559.1896M - PROTECTIVE SEALING.

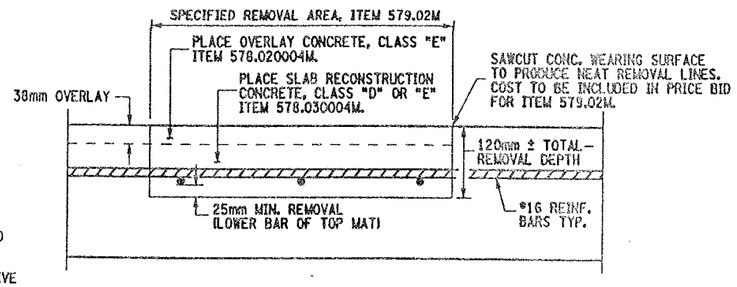

CROSS SECTION VIEW THROUGH REPAIR LOCATION

NOT TO SCALE

ITEMS USED:

ITEM 558.01M - TRANSVERSE SAWCUT GROOVING (SM)
ITEM 18559.1896M - PROTECTIVE SEALING FOR STRUCT. CONC. (SM)
ITEM 578.020004M - OVERLAY CONCRETE, CLASS "E" (SM)
ITEM 578.030004M - SLAB RECONSTRUCTION CONCRETE, CLASS "D" OR "E" (SM)
ITEM 579.02M - REINFORCING BAR EXPOSURE (SM)

AS BUILT REVISIONS

SIGNATURE DATE

INTERSTATE 481
OVER
CSX RAILROAD YARD
BRIDGE DECK REPAIRS

STATE OF NEW YORK
DEPARTMENT OF TRANSPORTATION

FILENAME	REGION	DATE	DRAWING NO.
305613AB.R1A	3	10/02	DR17-1

DESIGN SUPERVISOR ____ JOB MANAGER ____ DESIGNED BY ____ CHECKED BY ____ ESTIMATED BY ____ DRAFTED BY ____ CHECKED BY ____

FED ROAD REG. NO.	STATE	CONTRACT NO.	SHEET NO.	TOTAL SHEETS
1	N.Y.	D259214	325	432

BRIDGE REHABILITATION PROJECT (ELEMENT SPECIFIC)
VARIOUS BRIDGES ON INTERSTATE 481
TOWNS OF DEWITT AND CICERO
ONONDAGA COUNTY
P.I.N. 305613 | B.I.N. 1093572

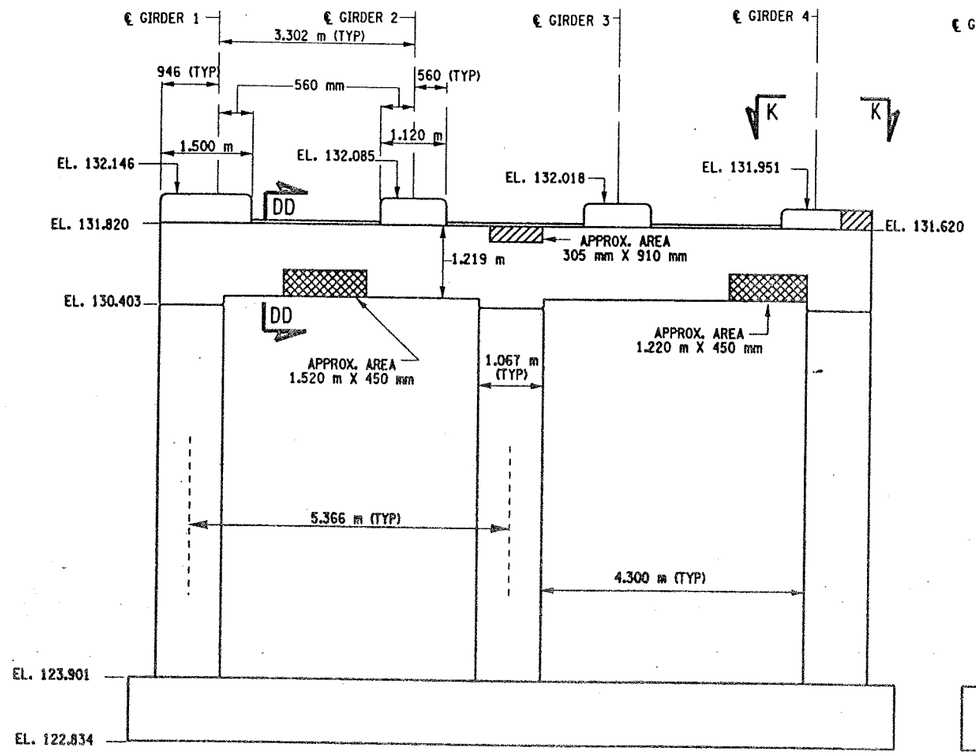

PIER 10 - FRONT FACE (LOOKING NORTH)
BIN 1093572
SCALE: 1 TO 50

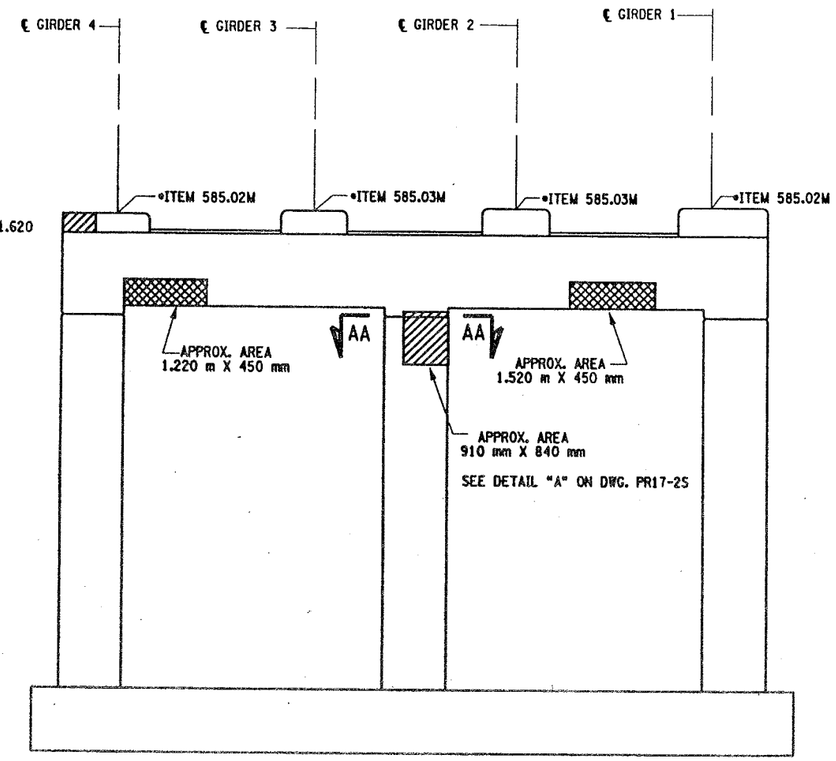

PIER 10 - BACK FACE (LOOKING SOUTH)
BIN 1093572
SCALE: 1 TO 50

NOTES:

1. ALL REINFORCEMENT TO REMAIN.
2. RESTORE TO ORIGINAL DIMENSIONS.
3. PEDESTALS NUMERICALLY NUMBERED FROM WEST TO EAST.
4. FOR THE CONCRETE REPAIR AREAS, THE CONCRETE SHALL BE REMOVED TO AT LEAST 40mm MIN. BEYOND THE ENCOUNTERED REINFORCEMENT AND TO SOUND CONCRETE, A.O.B.E.
5. ELEVATIONS SHOWN ARE FROM ORIGINAL CONTRACT PLANS F.I.S.H. 70-7 AND ARE FOR REFERENCE ONLY.
6. REMOVAL DIMENSIONS SHOWN ON PLANS ARE ESTIMATED AND SHALL BE FIELD VERIFIED BY THE CONTRACTOR PRIOR TO BEGINNING OF REMOVAL OPERATIONS A.O.B.E.
7. PERFORM BEARING RESTORATION TO ALL EXPANSION BEARINGS (TO INCLUDE RESETTING OF UNDEREXTENDED OR OVEREXTENDED BEARINGS). SEE DWG. PR17-1S FOR BEARING RESTORATION NOTES. SEE DWG. BR-10 & BR-11 FOR BEARING RESTORATION DETAILS.
8. FOR SECTION AA-AA SEE DWG. PR17-7N.
9. ALL CONCRETE REMOVAL SHALL BE SAWCUT TO PRODUCE NEAT REMOVAL LINES. COST TO BE INCLUDED IN THE PRICE BID FOR ITEM 582.05M AND ITEM 582.07M.
10. FOR JACKING NOTES SEE DWG PR17-1S.

• PERFORM STRUCTURAL LIFTING UNDER ITEM 585.02M - STRUCTURAL LIFTING OPERATIONS - TYPE B LIFTING AT A PIER) OR ITEM 585.03M - STRUCTURAL LIFTING OPERATIONS - TYPE C LIFTING AT A PIER WHERE THE CONTRACTOR SHALL BE REQUIRED TO LIFT OFF THE FOOTING AND/OR GROUND LEVEL.

JACKING LOADS:

D.L. = 75 MT
L.L. = 50 MT
TOTAL = 125 MT

LEGEND:

ITEM 582.05M - REMOVAL OF STRUCTURAL CONCRETE- REPLACE WITH CLASS A CONCRETE (CM)

ITEM 582.07M - REMOVAL OF STRUCTURAL CONCRETE - REPLACE WITH VERTICAL OVER-HEAD PATCH MATERIAL. (SM)

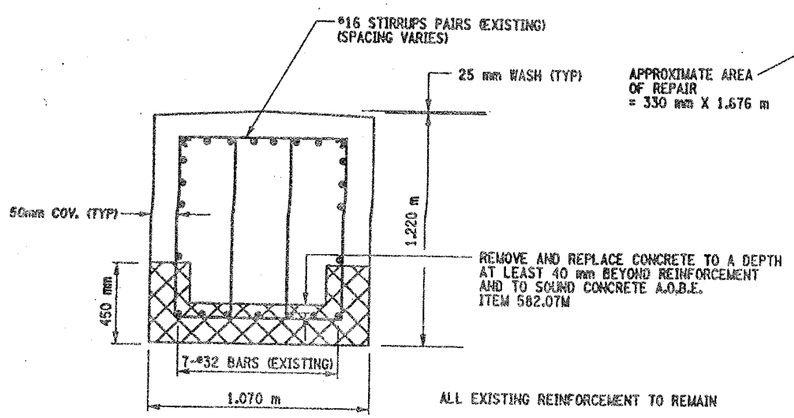

SECTION DD-DD
NOT TO SCALE

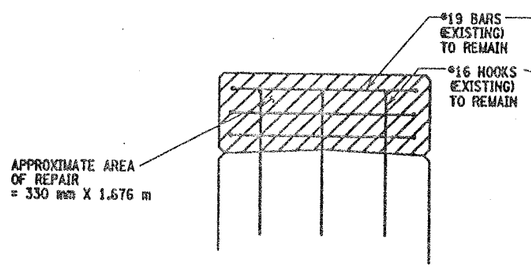

SECTION N-N
NOT TO SCALE

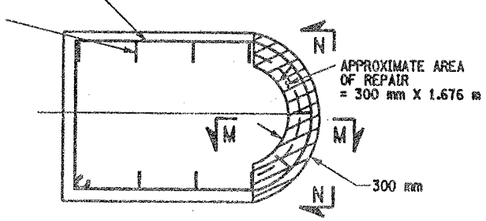

SECTION K-K
NOT TO SCALE

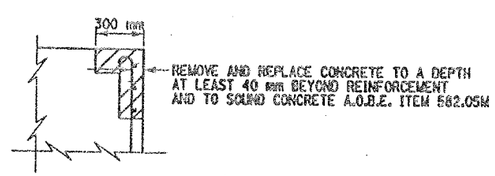

SECTION M-M
NOT TO SCALE

LIST OF ITEMS USED:

ITEM 15565.4302M - BRIDGE BEARING RESTORATION (EA)
ITEM 582.05M - REM. OF STRUC. CONC. - REPLACE WITH CLASS A CONCRETE (CM)
ITEM 582.07M - REM. OF STRUC. CONC. - REPL. W/ VERT. OVERHEAD PATCH MAT'L. (SM)
ITEM 585.02M - STRUCTURAL LIFTING OPERATIONS - TYPE B (EA)
ITEM 585.03M - STRUCTURAL LIFTING OPERATION - TYPE C (EA)

ALL DIMENSIONS ARE IN mm UNLESS OTHERWISE NOTED

AS BUILT REVISIONS

SIGNATURE | DATE

INTERSTATE 481 NB
OVER
CSX RAILROAD YARD
PIER 10

STATE OF NEW YORK
DEPARTMENT OF TRANSPORTATION

FILENAME	REGION	DATE	DRAWING NO.
305613AE.P10	3	10/02	PR17-10N

DESIGN SUPERVISOR ____ JOB MANAGER ____ DESIGNED BY ____ CHECKED BY ____ ESTIMATED BY ____ DRAFTED BY ____ CHECKED BY ____

FED ROAD REG. NO.	STATE	CONTRACT NO.	SHEET NO.	TOTAL SHEETS
1	N.Y.	D259214	326	432

BRIDGE REHABILITATION PROJECT (ELEMENT SPECIFIC)
VARIOUS BRIDGES ON INTERSTATE 481
TOWNS OF DEWITT AND CICERO
ONONDAGA COUNTY
P.I.N. 305613 | B.I.N. 1093572

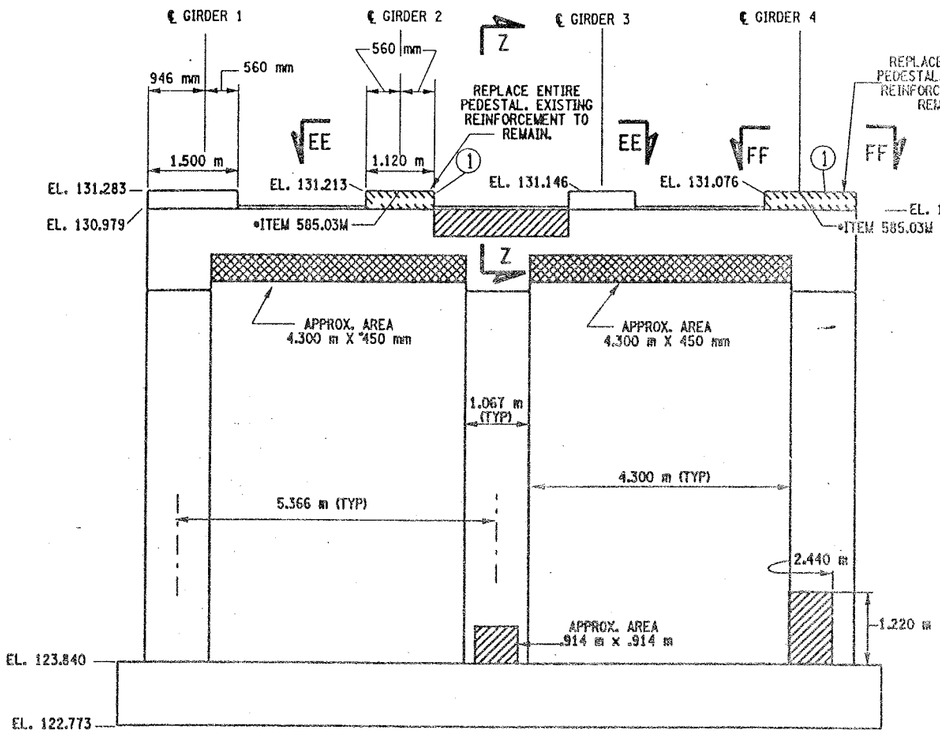

PIER 11 - FRONT FACE (LOOKING NORTH)
BIN 1093572
SCALE: 1 TO 50

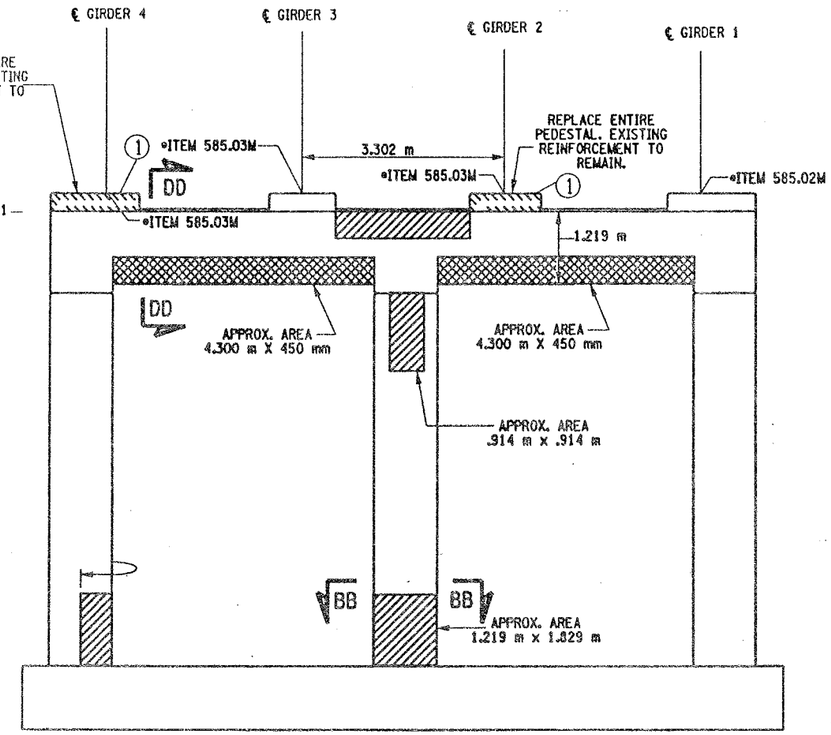

PIER 11- BACK FACE (LOOKING SOUTH)
BIN 1093572
SCALE: 1 TO 50

NOTES:

1. ALL REINFORCEMENT TO REMAIN.
2. RESTORE TO ORIGINAL DIMENSIONS.
3. PEDESTALS NUMERICALLY NUMBERED FROM WEST TO EAST.
4. FOR THE CONCRETE REPAIR AREAS, THE CONCRETE SHALL BE REMOVED TO AT LEAST 40mm MIN. BEYOND THE ENCOUNTERED REINFORCEMENT AND TO SOUND CONCRETE, A.O.B.E.
5. ELEVATIONS SHOWN ARE FROM ORIGINAL CONTRACT PLANS F.I.S.H. 70-7 AND ARE FOR REFERENCE ONLY.
6. REMOVAL DIMENSIONS SHOWN ON PLANS ARE ESTIMATED AND SHALL BE FIELD VERIFIED BY THE CONTRACTOR PRIOR TO BEGINNING OF REMOVAL OPERATIONS A.O.B.E.
7. PERFORM BEARING RESTORATION TO ALL EXPANSION BEARINGS (TO INCLUDE RESETTING OF UNDEREXTENDED OR OVEREXTENDED BEARINGS). SEE DWG. PR17-1S FOR BEARING RESTORATION NOTES. SEE DWG. BR-10 & BR-11 FOR BEARING RESTORATION DETAILS.
8. SEE DWG PR17-10N FOR SECTION DD-DD.
9. SEE DWG. PR17-12S FOR SECTION BB-BB.
10. SEE DWG. PR17-7N FOR SECTION Z-Z.
11. PEDESTALS 2 AND 4 SHALL BE REPLACED TO EXISTING DIMENSIONS. ITEM 555.0105 M
12. ALL CONCRETE REMOVAL SHALL BE SAWCUT TO PRODUCE NEAT REMOVAL LINES. COST TO BE INCLUDED IN THE PRICE BID FOR ITEM 582.05M AND ITEM 582.07M.
13. FOR JACKING NOTES SEE DWG PR17-1S.

• PERFORM STRUCTURAL LIFTING UNDER ITEM 585.02M - STRUCTURAL LIFTING OPERATIONS - TYPE B (LIFTING AT A PIER) OR ITEM 585.03M - STRUCTURAL LIFTING OPERATIONS - TYPE C (LIFTING AT A PIER WHERE THE CONTRACTOR SHALL BE REQUIRED TO LIFT OFF THE FOOTING AND/OR GROUND LEVEL.

JACKING LOADS:

D.L. = 75 MT
L.L. = 50 MT
TOTAL = 125 MT

(1) INDICATES CONCRETE PLACEMENT NUMBER

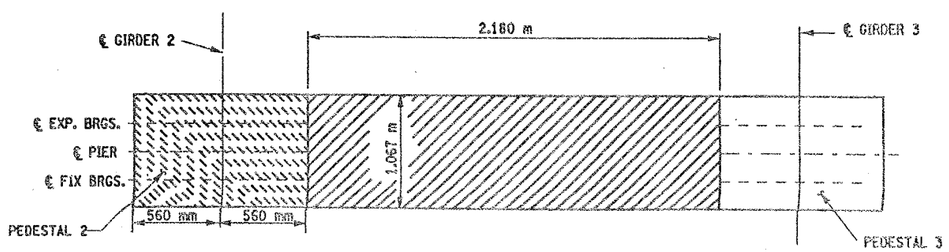

SECTION EE-EE
NOT TO SCALE

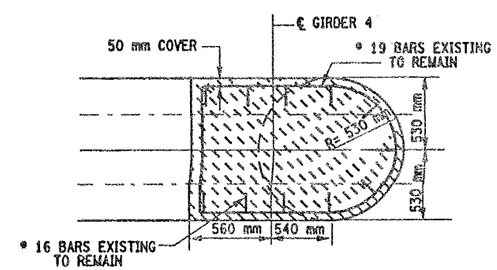

SECTION FF-FF
NOT TO SCALE

LEGEND:

- ITEM 582.05M - REMOVAL OF STRUCTURAL CONCRETE- REPLACE WITH CLASS A CONCRETE. (CM)
- ITEM 582.07M - REMOVAL OF STRUCTURAL CONCRETE - REPLACE WITH VERTICAL OVER-HEAD PATCH MATERIAL. (SM)
- ITEM 580.01 M - REMOVAL OF STRUCTURAL CONCRETE. (CM) AND ITEM 555.0105 M - CONCRETE FOR STRUCTURES CLASS A. (CM)

ALL DIMENSIONS ARE IN mm UNLESS OTHERWISE NOTED

CONCRETE TABLE (m^3)		
PLACEMENT	QUANTITY	ITEM NO.
1	0.80	555.0105M

LIST OF ITEMS USED

ITEM 555.0105M - CONCRETE FOR STRUCTURES, CLASS A (CM)
ITEM 15565.4302M - BRIDGE BEARING RESTORATION (EA)
ITEM 580.01M - REMOVAL OF STRUCTURAL CONCRETE (CM)
ITEM 582.05M - REM. OF STRUC. CONC. - REPLACE WITH CLASS A CONCRETE (CM)
ITEM 582.07M - REM. OF STRUC. CONC. - REPL. W/ VERT. OVERHEAD PATCH MAT'L (SM)
ITEM 585.02M - STRUCTURAL LIFTING OPERATIONS - TYPE B (EA)
ITEM 585.03M - STRUCTURAL LIFTING OPERATION - TYPE C (EA)

AS BUILT REVISIONS

SIGNATURE | DATE

INTERSTATE 481 NB
OVER
CSX RAILROAD YARD
PIER 11

STATE OF NEW YORK
DEPARTMENT OF TRANSPORTATION

FILENAME	REGION	DATE	DRAWING NO.
305613AE.P11	3	10/02	PR17-11N

DESIGN SUPERVISOR ____ JOB MANAGER ____ DESIGNED BY ____ CHECKED BY ____ ESTIMATED BY ____ DRAFTED BY ____ CHECKED BY ____

FED ROAD REG. NO.	STATE	CONTRACT NO.	SHEET NO.	TOTAL SHEETS
1	N.Y.	D259214	327	432

BRIDGE REHABILITATION PROJECT (ELEMENT SPECIFIC)
VARIOUS BRIDGES ON INTERSTATE 481
TOWNS OF DEWITT AND CICERO
ONONDAGA COUNTY
P.I.N. 305613 B.I.N. 1093572

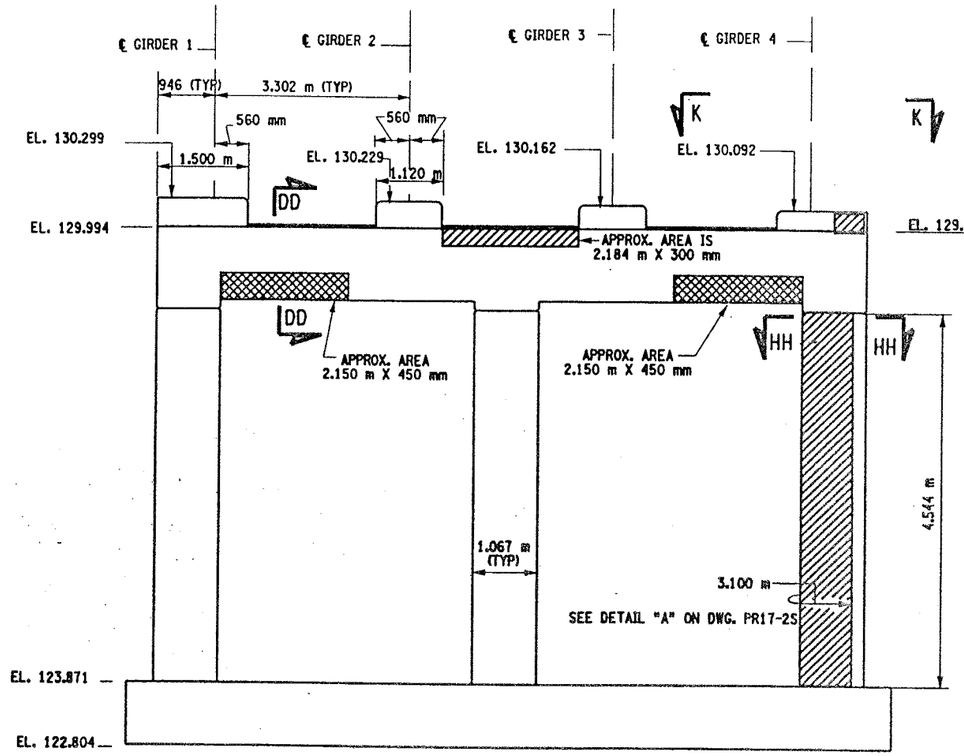

PIER 12 - FRONT FACE (LOOKING NORTH)
BIN 1093572
SCALE: 1 TO 50

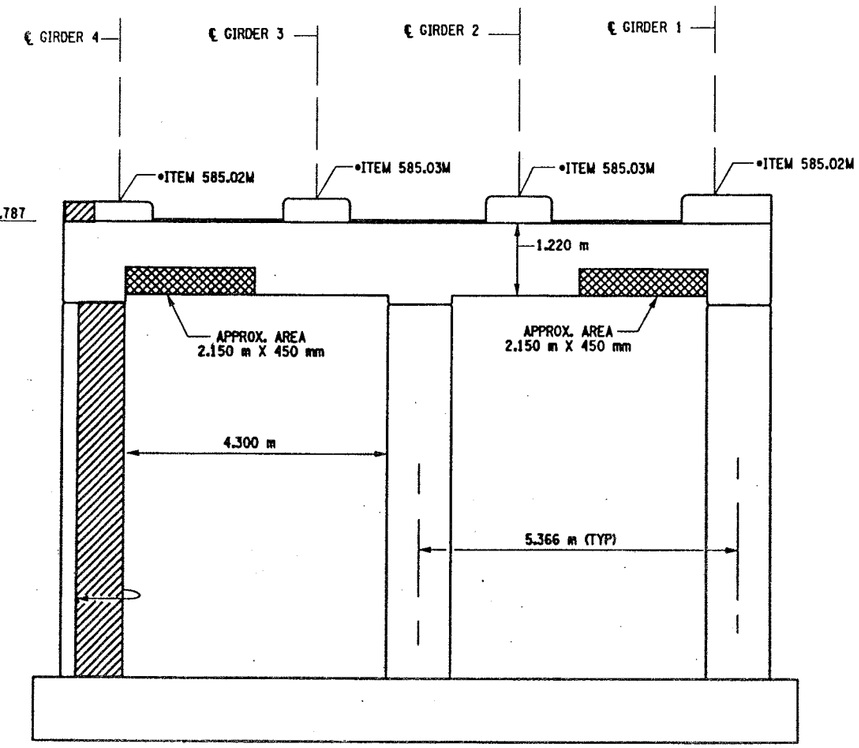

PIER 12 - BACK FACE (LOOKING SOUTH)
BIN 1093572
SCALE: 1 TO 50

NOTES:

1. ALL REINFORCEMENT TO REMAIN.
2. RESTORE TO ORIGINAL DIMENSIONS.
3. PEDESTALS NUMERICALLY NUMBERED FROM WEST TO EAST.
4. FOR THE CONCRETE REPAIR AREAS, THE CONCRETE SHALL BE REMOVED TO AT LEAST 40mm MIN. BEYOND THE ENCOUNTERED REINFORCEMENT AND TO SOUND CONCRETE, A.O.B.E.
5. ELEVATIONS SHOWN ARE FROM ORIGINAL CONTRACT PLANS F.I.S.H. 70-7 AND ARE FOR REFERENCE ONLY.
6. REMOVAL DIMENSIONS SHOWN ON PLANS ARE ESTIMATED AND SHALL BE FIELD VERIFIED BY THE CONTRACTOR PRIOR TO BEGINNING OF REMOVAL OPERATIONS A.O.B.E.
7. PERFORM BEARING RESTORATION TO ALL EXPANSION BEARINGS (TO INCLUDE RESETTING OF UNDEREXTENDED OR OVEREXTENDED BEARINGS). SEE DWG. PR17-1S FOR BEARING RESTORATION NOTES. SEE DWG. BR-10 & BR-11 FOR BEARING RESTORATION DETAILS.
8. SEE DWG PR17-10N FOR SECTION DD-DD.
9. ALL CONCRETE REMOVAL SHALL BE SAWCUT TO PRODUCE NEAT REMOVAL LINES. COST TO BE INCLUDED IN THE PRICE BID FOR ITEM 582.05M AND 582.07M.
10. FOR JACKING NOTES SEE DWG PR17-1S.

• PERFORM STRUCTURAL LIFTING UNDER ITEM 585.02M - STRUCTURAL LIFTING OPERATIONS - TYPE B (LIFTING AT A PIER) OR ITEM 585.03M - STRUCTURAL LIFTING OPERATIONS - TYPE C (LIFTING AT A PIER WHERE THE CONTRACTOR SHALL BE REQUIRED TO LIFT OFF THE FOOTING AND/OR GROUND LEVEL.

JACKING LOADS:

D.L. = 75 MT
L.L. = 50 MT
TOTAL = 125 MT

LEGEND:

ITEM 582.05M - REMOVAL OF STRUCTURAL CONCRETE- REPLACE WITH CLASS A CONCRETE. (CM)

ITEM 582.07M - REMOVAL OF STRUCTURAL CONCRETE - REPLACE WITH VERTICAL OVER-HEAD PATCH MATERIAL. (SM)

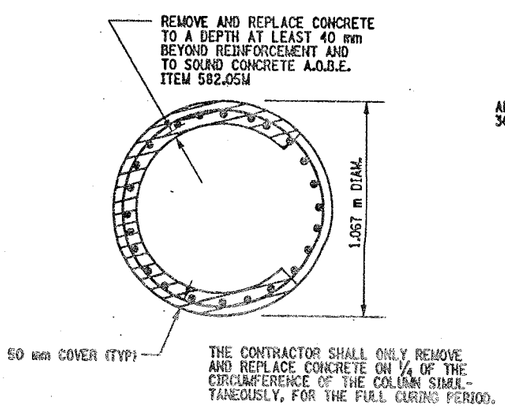

SECTION HH-HH
NOT TO SCALE

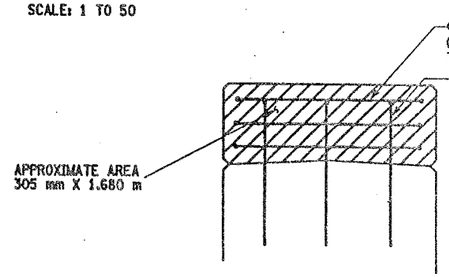

SECTION N-N
NOT TO SCALE

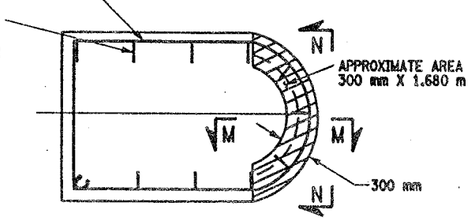

SECTION K-K
NOT TO SCALE

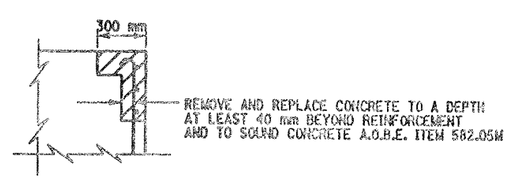

SECTION M-M
NOT TO SCALE

LIST OF ITEMS USED:

ITEM 15565.4302M - BRIDGE BEARING RESTORATION (EA)
ITEM 582.05M - REM. OF STRUC. CONC. - REPLACE WITH CLASS A CONCRETE (CM)
ITEM 582.07M - REM. OF STRUC. CONC. - REPL. W/ VERT. OVERHEAD PATCH MAT'L (SM)
ITEM 585.02M - STRUCTURAL LIFTING OPERATIONS - TYPE B (EA)
ITEM 585.03M - STRUCTURAL LIFTING OPERATION - TYPE C (EA)

ALL DIMENSIONS ARE IN mm UNLESS OTHERWISE NOTED

AS BUILT REVISIONS

SIGNATURE DATE

INTERSTATE 481 NB
OVER
CSX RAILROAD YARD
PIER 12

STATE OF NEW YORK
DEPARTMENT OF TRANSPORTATION

FILENAME	REGION	DATE	DRAWING NO.
305613AE.P12	3	10/02	PR17-12N

DESIGN SUPERVISOR ____ JOB MANAGER ____ DESIGNED BY ____ ESTIMATED BY ____ DRAFTED BY ____ CHECKED BY ____ CHECKED BY ____

FED ROAD REG. NO.	STATE	CONTRACT NO.	SHEET NO.	TOTAL SHEETS
1	N.Y.	D259214	328	432

BRIDGE REHABILITATION PROJECT (ELEMENT SPECIFIC)
VARIOUS BRIDGES ON INTERSTATE 481
TOWNS OF DEWITT AND CICERO
ONONDAGA COUNTY
P.I.N. 305613 B.I.N. 1093572

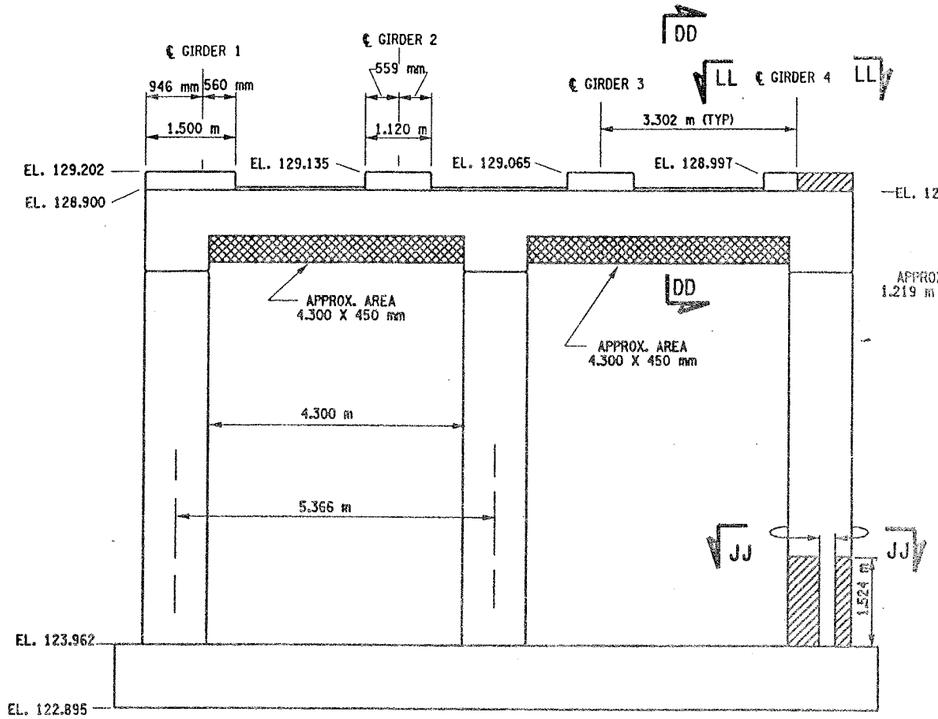

PIER 13 - FRONT FACE (LOOKING NORTH)
BIN 1093572
SCALE: 1 TO 50

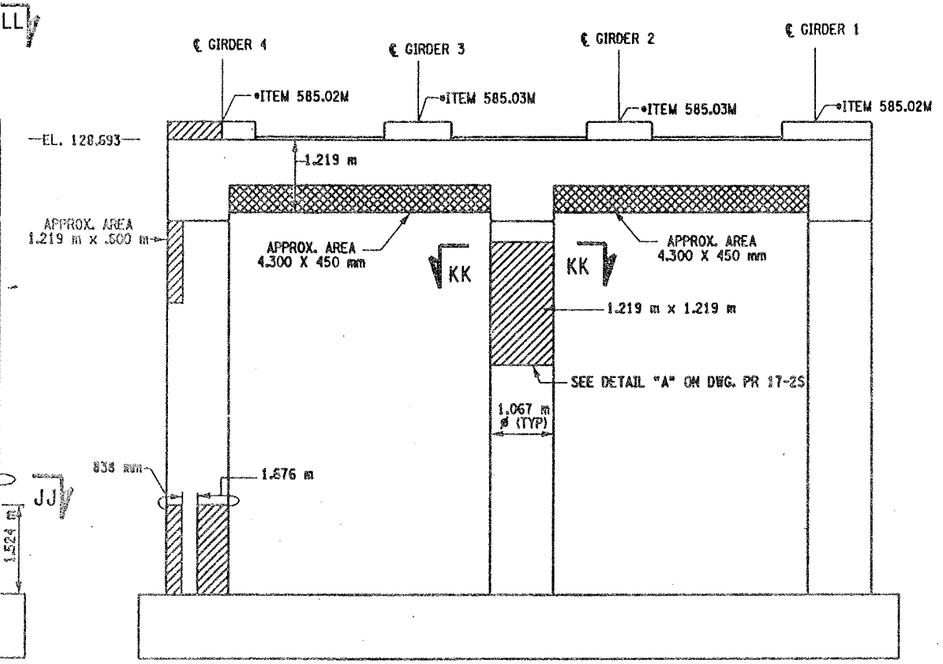

PIER 13- BACK FACE (LOOKING SOUTH)
BIN 1093572
SCALE: 1 TO 50

NOTES:

1. ALL REINFORCEMENT TO REMAIN.
2. RESTORE TO ORIGINAL DIMENSIONS.
3. PEDESTALS NUMERICALLY NUMBERED FROM WEST TO EAST.
4. FOR THE CONCRETE REPAIR AREAS, THE CONCRETE SHALL BE REMOVED TO AT LEAST 40mm MIN. BEYOND THE ENCOUNTERED REINFORCEMENT AND TO SOUND CONCRETE, A.O.B.E.
5. ELEVATIONS SHOWN ARE FROM ORIGINAL CONTRACT PLANS F.I.S.H. 70-7 AND ARE FOR REFERENCE ONLY.
6. REMOVAL DIMENSIONS SHOWN ON PLANS ARE ESTIMATED AND SHALL BE FIELD VERIFIED BY THE CONTRACTOR PRIOR TO BEGINNING OF REMOVAL OPERATIONS A.O.B.E.
7. PERFORM BEARING RESTORATION TO ALL EXPANSION BEARINGS (TO INCLUDE RESETTING OF UNDEREXTENDED OR OVEREXTENDED BEARINGS). SEE DWG. PR17-1S FOR BEARING RESTORATION NOTES. SEE DWG. BR-10 & BR-11 FOR BEARING RESTORATION DETAILS.
8. SEE DWG. PR 17-10N FOR SECTION DD-DD.
9. ALL CONCRETE REMOVAL SHALL BE SAWCUT TO PRODUCE NEAT REMOVAL LINES. COST TO BE INCLUDED IN THE PRICE BID FOR ITEM 582.05M AND 582.07M.
10. FOR JACKING NOTES SEE DWG PR17-1S.

• PERFORM STRUCTURAL LIFTING UNDER ITEM 585.02M - STRUCTURAL LIFTING OPERATIONS - TYPE B (LIFTING AT A PIER) OR ITEM 585.03M - STRUCTURAL LIFTING OPERATIONS - TYPE C (LIFTING AT A PIER WHERE THE CONTRACTOR SHALL BE REQUIRED TO LIFT OFF THE FOOTING AND/OR GROUND LEVEL.

JACKING LOADS:

D.L. = 75 MT
L.L. = 50 MT
TOTAL = 125 MT

LEGEND:

ITEM 582.05M - REMOVAL OF STRUCTURAL CONCRETE- REPLACE WITH CLASS A CONCRETE. (CM)

ITEM 582.07M - REMOVAL OF STRUCTURAL CONCRETE - REPLACE WITH VERTICAL OVER-HEAD PATCH MATERIAL. (SM)

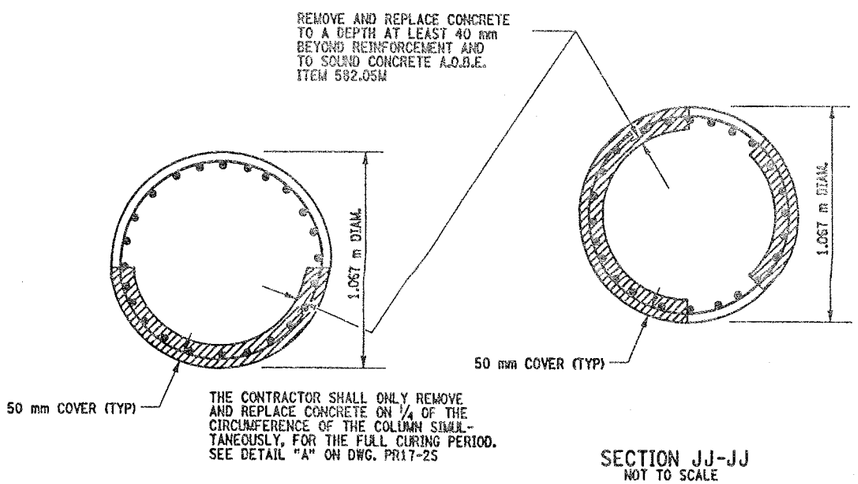

SECTION KK-KK
NOT TO SCALE

SECTION JJ-JJ
NOT TO SCALE

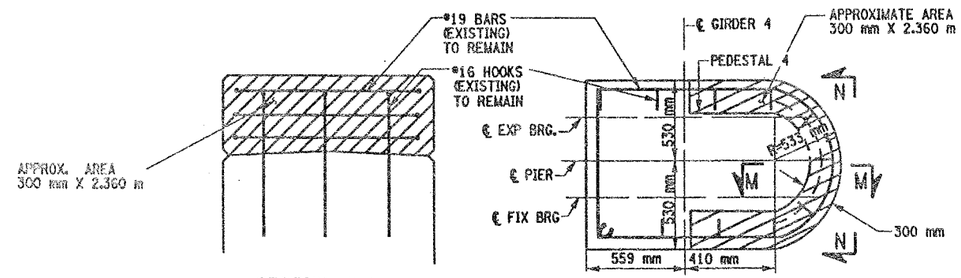

SECTION N-N
NOT TO SCALE

SECTION LL- LL
NOT TO SCALE

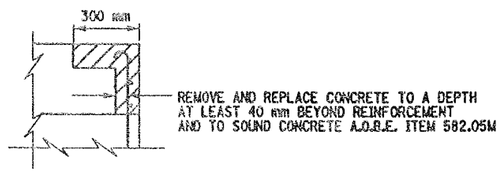

SECTION M-M
NOT TO SCALE

LIST OF ITEMS USED:

ITEM 15565.4302M - BRIDGE BEARING RESTORATION (EA)
ITEM 582.05M - REM. OF STRUC. CONC. - REPLACE WITH CLASS A CONCRETE (CM)
ITEM 582.07M - REM. OF STRUC. CONC. - REPL. W/ VERT. OVERHEAD PATCH MAT.L (SM)
ITEM 585.02M - STRUCTURAL LIFTING OPERATIONS - TYPE B (EA)
ITEM 585.03M - STRUCTURAL LIFTING OPERATION - TYPE C (EA)

ALL DIMENSIONS ARE IN mm UNLESS OTHERWISE NOTED

AS BUILT REVISIONS

SIGNATURE DATE

INTERSTATE 481 NB
OVER
CSX RAILROAD YARD
PIER 13

STATE OF NEW YORK
DEPARTMENT OF TRANSPORTATION

FILENAME	REGION	DATE	DRAWING NO.
305613AE.P13	3	10/02	PR17-13N

DESIGN SUPERVISOR ____ JOB MANAGER ____ DESIGNED BY ____ CHECKED BY ____ ESTIMATED BY ____ DRAFTED BY ____ CHECKED BY ____

FED ROAD REG. NO.	STATE	CONTRACT NO.	SHEET NO.	TOTAL SHEETS
1	N.Y.	D259214	329	432

BRIDGE REHABILITATION PROJECT (ELEMENT SPECIFIC)
VARIOUS BRIDGES ON INTERSTATE 481
TOWNS OF DEWITT AND CICERO
ONONDAGA COUNTY
P.I.N. 305613 B.I.N. 1093572

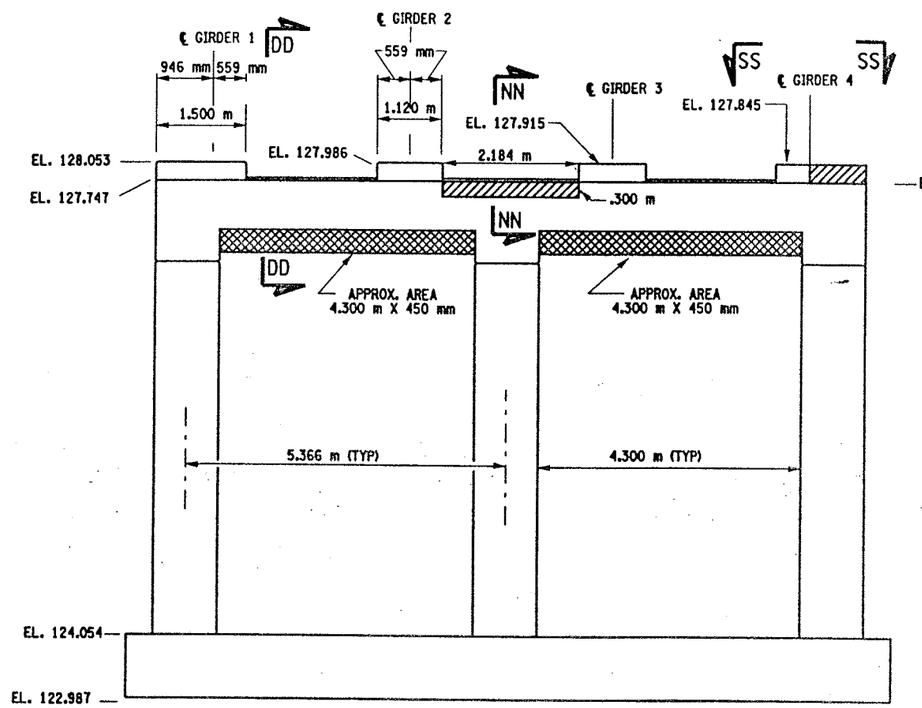

PIER 14 - FRONT FACE (LOOKING NORTH)
BIN 1093572
SCALE: 1 TO 50

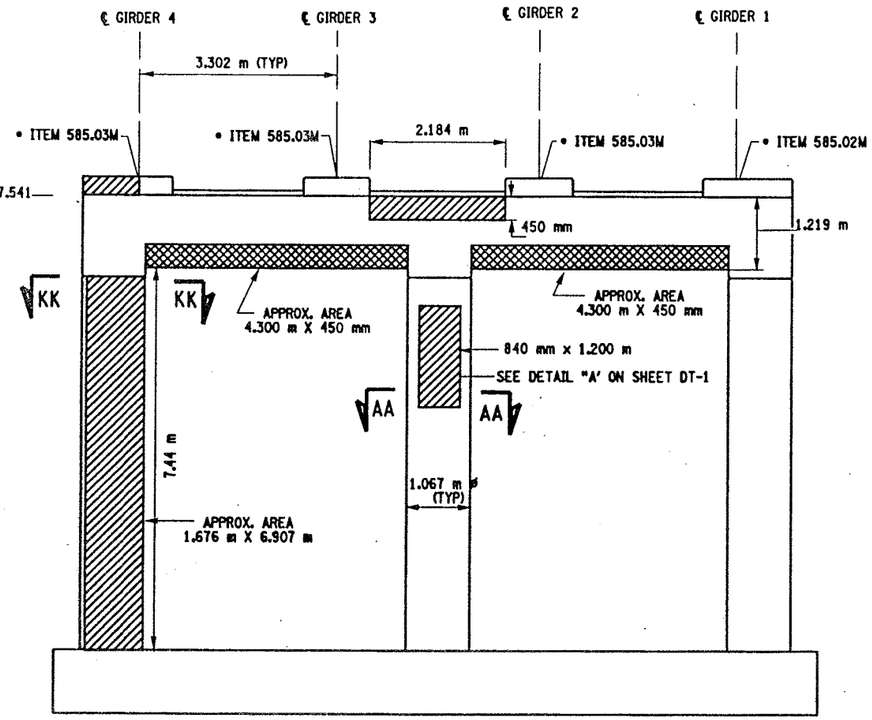

PIER 14 - BACK FACE (LOOKING SOUTH)
BIN 1093572
SCALE: 1 TO 50

NOTES:

1. ALL REINFORCEMENT TO REMAIN.
2. RESTORE TO ORIGINAL DIMENSIONS.
3. PEDESTALS NUMERICALLY NUMBERED FROM WEST TO EAST.
4. FOR THE CONCRETE REPAIR AREAS, THE CONCRETE SHALL BE REMOVED TO AT LEAST 40mm MIN. BEYOND THE ENCOUNTERED REINFORCEMENT AND TO SOUND CONCRETE, A.O.B.E.
5. ELEVATIONS SHOWN ARE FROM ORIGINAL CONTRACT PLANS F.I.S.H. 70-7 AND ARE FOR REFERENCE ONLY.
6. REMOVAL DIMENSIONS SHOWN ON PLANS ARE ESTIMATED AND SHALL BE FIELD VERIFIED BY THE CONTRACTOR PRIOR TO BEGINNING OF REMOVAL OPERATIONS A.O.B.E.
7. PERFORM BEARING RESTORATION TO ALL EXPANSION BEARINGS (TO INCLUDE RESETTING OF UNDEREXTENDED OR OVEREXTENDED BEARINGS). SEE DWG. PR17-1S FOR BEARING RESTORATION NOTES. SEE DWG. BR-10 & BR-11 FOR BEARING RESTORATION DETAILS.
8. SEE DWG. PR17-10N FOR SECTION DD-DD.
9. SEE DWG. PR17-7N FOR SECTION AA-AA.
10. SEE DWG. PR17-13N FOR SECTION KK-KK.
11. ALL CONCRETE REMOVAL SHALL BE SAWCUT TO PRODUCE NEAT REMOVAL LINES. COST TO BE INCLUDED IN THE PRICE BID FOR ITEM 582.05M AND ITEM 582.07M.
12. FOR JACKING NOTES SEE DWG PR17-1S.

• PERFORM STRUCTURAL LIFTING UNDER ITEM 585.02M - STRUCTURAL LIFTING OPERATIONS - TYPE B (LIFTING AT A PIER) OR ITEM 585.03M - STRUCTURAL LIFTING OPERATIONS - TYPE C (LIFTING AT A PIER WHERE THE CONTRACTOR SHALL BE REQUIRED TO LIFT OFF THE FOOTING AND/OR GROUND LEVEL.

JACKING LOADS:

D.L. = 75 MT
L.L. = 50 MT
TOTAL = 125 MT

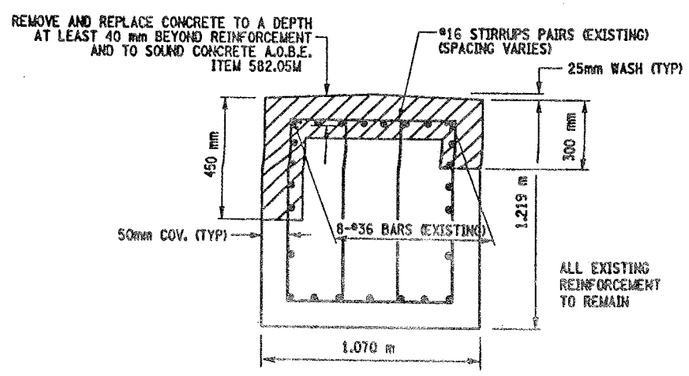

SECTION NN-NN
NOT TO SCALE

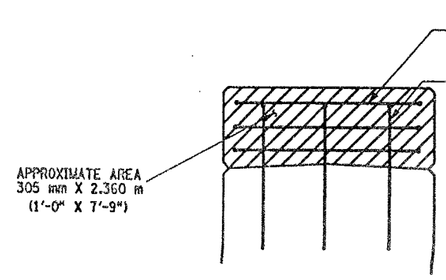

SECTION N-N
NOT TO SCALE

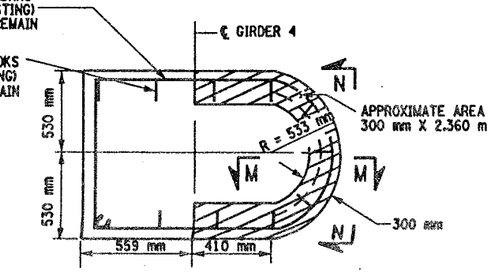

SECTION SS-SS
NOT TO SCALE

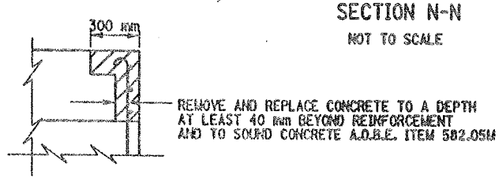

SECTION M-M
NOT TO SCALE

LIST OF ITEMS USED:

ITEM 15565.4302M - BRIDGE BEARING RESTORATION (EA)
ITEM 582.05M - REM. OF STRUC. CONC. - REPLACE WITH CLASS A CONCRETE (CM)
ITEM 582.07M - REM. OF STRUC. CONC. - REPL. W/ VERT. OVERHEAD PATCH MAT'L. (SM)
ITEM 585.02M - STRUCTURAL LIFTING OPERATIONS - TYPE B (EA)
ITEM 585.03M - STRUCTURAL LIFTING OPERATION - TYPE C (EA)

LEGEND:

ITEM 582.05M - REMOVAL OF STRUCTURAL CONCRETE- REPLACE WITH CLASS A CONCRETE. (CM)

ITEM 582.07M - REMOVAL OF STRUCTURAL CONCRETE - REPLACE WITH VERTICAL OVER-HEAD PATCH MATERIAL. (SM)

ALL DIMENSIONS ARE IN mm UNLESS OTHERWISE NOTED

AS BUILT REVISIONS

SIGNATURE DATE

INTERSTATE 481 NB
OVER
CSX RAILROAD YARD
PIER 14

STATE OF NEW YORK
DEPARTMENT OF TRANSPORTATION

FILENAME	REGION	DATE	DRAWING NO.
305613AE.P14	3	10/02	PR17-14N

CHECKED BY
DRAFTED BY
ESTIMATED BY
CHECKED BY
DESIGNED BY
JOB MANAGER
DESIGN SUPERVISOR

FED ROAD REG. NO.	STATE	CONTRACT NO.	SHEET NO.	TOTAL SHEETS
1	N.Y.	D259214	330	432

BRIDGE REHABILITATION PROJECT (ELEMENT SPECIFIC)
VARIOUS BRIDGES ON INTERSTATE 481
TOWNS OF DEWITT AND CICERO
ONONDAGA COUNTY
P.I.N. 305613 B.I.N. 1093571 & 1093572

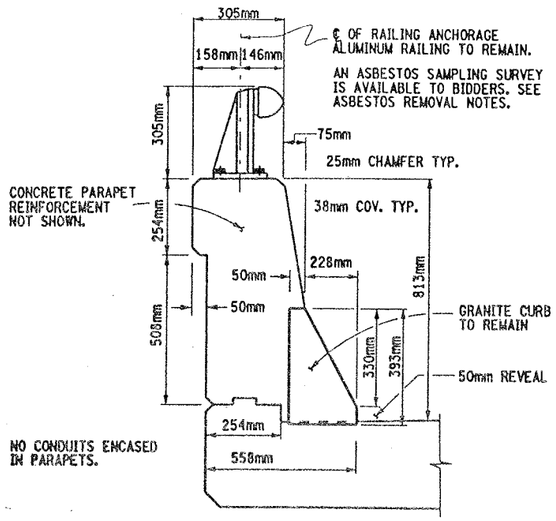

TYPICAL SECTION THRU SUPERSTRUCTURE
PARAPET CONCRETE DETAILS

NOT TO SCALE

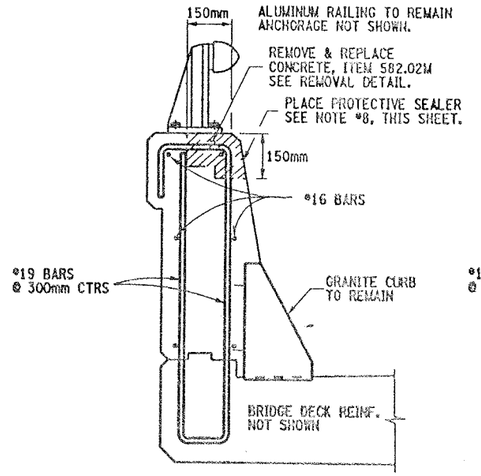

(I) REPAIR DETAILS
150mmX150mm TOP

NOT TO SCALE

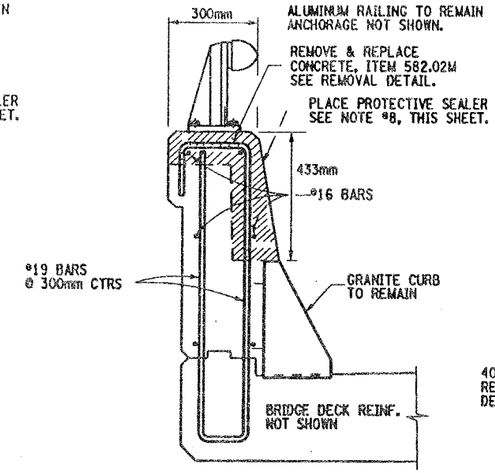

(II) REPAIR DETAILS
FULL TOP & FRONT FACE

NOT TO SCALE

CONCRETE REMOVAL NOTES:

REMOVE ALL DETERIORATED CONCRETE TO SOUND CONCRETE AND AT LEAST 40mm BEYOND ENCOUNTERED REINFORCEMENT BARS, AOBE. PAYMENT TO BE PAID UNDER ITEM 582.05M.

CONCRETE REMOVAL, SAWCUT 6mm DEPTH MINIMUM TO PRODUCE NEAT REMOVAL LINES, ALL COSTS SHALL BE INCLUDED IN PRICE BID FOR ITEM 582.05M.

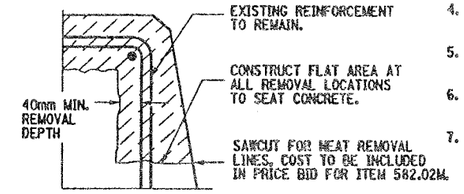

TYPICAL REMOVAL DETAIL

NOT TO SCALE

CONCRETE PARAPET REPAIR NOTES:

1. ALUMINUM RAILING TO REMAIN, ANCHORAGE NOT SHOWN.
2. EXISTING PARAPET REINFORCEMENT TO REMAIN.
3. GRANITE CURB TO REMAIN, ANCHOR BARS NOT SHOWN.
4. REMOVAL OF CONCRETE TO LIMITS SHOWN, AOBE. SEE TYPICAL REMOVAL DETAIL, THIS SHEET.
5. ALL DIMENSIONS SHOWN FOR CONCRETE REMOVAL ARE APPROXIMATE AND SHALL BE FIELD VERIFIED.
6. CONTRACTOR SHALL RESTORE CONCRETE PARAPET TO ORIGINAL DIMENSIONS.
7. IT IS DESIRABLE TO RETAIN ALL EXISTING GRANITE CURB, BUT AT SOME LOCATIONS ADJACENT TO THE JOINT BLOCK-OUTS IT MAY BE NECESSARY TO REPLACE OR REPAIR THE SECTION OF CURB, TO THE SATISFACTION OF THE ENGINEER. COST TO BE INCLUDE IN PRICE BID FOR ITEM 582.05M.
8. AFTER PARAPET REPAIRS ARE COMPLETED AND SUFFICIENT CURE TIME AS DECIDED BY ENGINEER, APPLY A COATING TYPE PROTECTIVE SEALERS WHICH MEETS MATERIAL SPECIFICATION 717-04. THIS PROTECTIVE SEALER SHALL BE APPLIED TO THE FRONT FACE AND TOP OF ALL PARAPETS (REPAIRED AREAS & ORIGINAL AREAS) TO ENSURE A UNIFORMED APPEARANCE. COST OF THIS SEALER TO BE INCLUDED IN PRICE BID FOR ITEM 18559.1696 M.

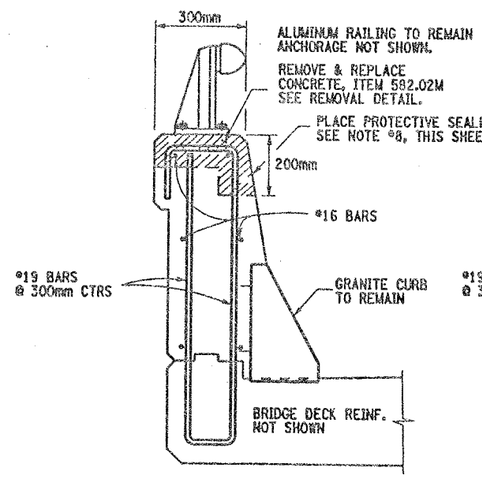

(III) REPAIR DETAILS
FULL TOP & 200mm FACE

NOT TO SCALE

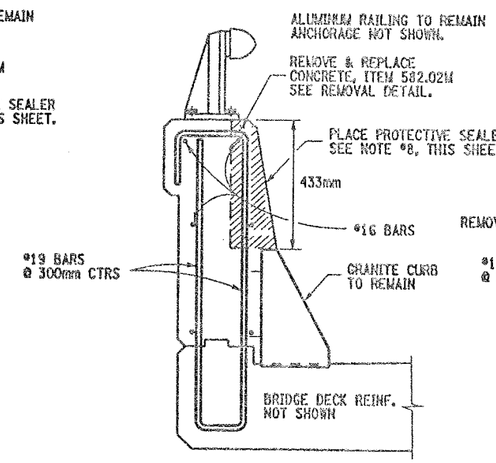

(IV) REPAIR DETAILS
FRONT FACE

NOT TO SCALE

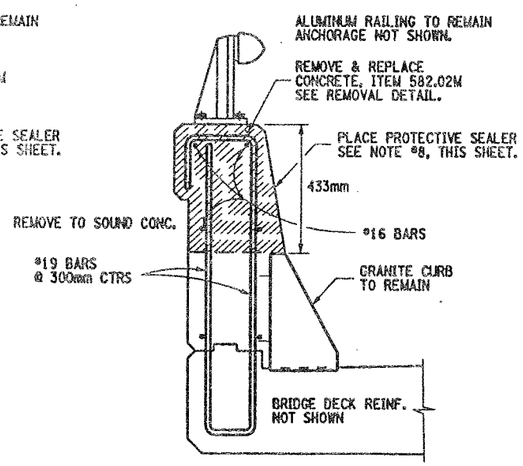

(V) REPAIR DETAILS
FULL SECTION

NOT TO SCALE

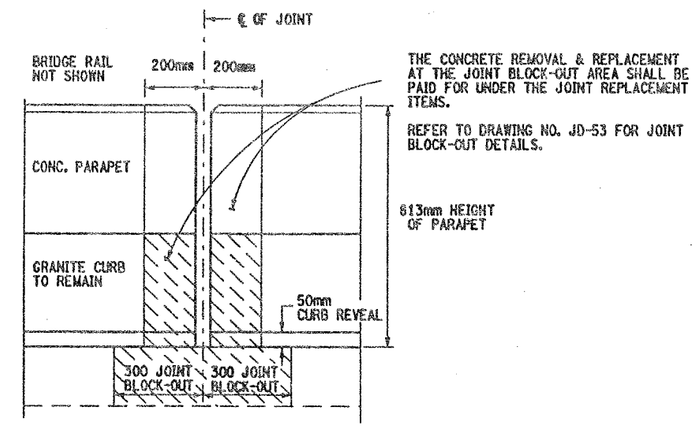

THE CONCRETE REMOVAL & REPLACEMENT AT THE JOINT BLOCK-OUT AREA SHALL BE PAID FOR UNDER THE JOINT REPLACEMENT ITEMS.

REFER TO DRAWING NO. JD-53 FOR JOINT BLOCK-OUT DETAILS.

FRONT FACE PARAPET CONCRETE DETAIL
SHOWS TYPICAL CONC. REMOVAL AT JOINT

NOT TO SCALE

ASBESTOS MATERIAL REMOVAL NOTES:

THE REMOVAL OF ALL ASBESTOS CONTAINING CAULK (ITEM 210.5433M) SHALL BE COMPLETED PRIOR TO COMMENCEMENT OF ANY PARAPET REPAIR WORK.

THIS REMOVAL OF THE ASBESTOS CAULK SHALL BE PERFORMED AT EACH BRIDGE RAIL BASE PLATE ON BOTH N.B. & S.B. BRIDGES. (REMOVE ASBESTOS CALKING AT ALL RAIL BASE PLATES BOTH BRIDGES)

AFTER COMPLETION OF THE PARAPET REPAIRS INSTALL A CAULKING COMPOUND AROUND THE BASE PLATES OF THE RAILING WHICH MEETS MATERIAL SPECIF. 705-06 AND IS ACCEPTABLE TO THE ENGINEER. PAID UNDER ITEM 210.5433M.

REFER TO ORIGINAL CONTRACT PLANS F.I.S.H. 70-7 FOR RAIL LAY-OUT DETAILS.

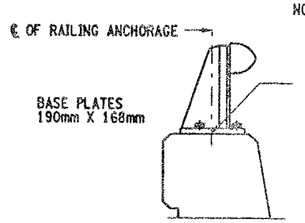

REMOVE EXISTING GRAY ASBESTOS CAULKING COMPOUND AT THE ALUMINUM RAILING BASE PLATES. IT IS ASSUMED THAT THE CAULK COMPOUND IS SURROUNDING (PERIMETER) THE RAILING BASE PLATES. THIS PERIMETER REMOVAL OPERATION SHALL BE PERFORM AT EACH RAILING BASE PLATE ON BOTH STRUCTURES.

HOWEVER, SOME CAULK MATERIAL MAY BE FOUND UNDER THE RAILING BASE PLATES. THIS CAULKING COMPOUND UNDER THE BASE PLATES SHALL BE REMOVED ONLY AT LOCATIONS WHERE THE PARAPET CONCRETE REPAIRS WILL DISTURB THE MATERIAL (REMOVAL AS ENCOUNTERED).

ALL COSTS TO BE PAID UNDER ITEM 210.5433M. SEE ASBESTOS MATERIAL REMOVAL NOTES, THIS SHEET.

TYPICAL BRIDGE RAIL DETAIL

NOT TO SCALE

ITEMS USED:

ITEM 582.05M	- REMOVAL OF STRUCTURAL CONCRETE REPLACE WITH CLASS "A" CONCRETE (CM)
ITEM 210.5433M	- REMOVAL & DISPOSAL OF ASBESTOS CONTAINING CAULK (BV 12) (L.S)
ITEM 18559.1696M	- PROTECTIVE SEALING OF STRUCTURAL CONCRETE (SM)

ALL DIMENSIONS ARE IN mm UNLESS OTHERWISE NOTED

AS BUILT REVISIONS

SIGNATURE DATE

INTERSTATE 481 OVER CSX RR YARD

PARAPET REPAIR DETAILS

STATE OF NEW YORK
DEPARTMENT OF TRANSPORTATION

FILENAME	REGION	DATE	DRAWING NO.
305613AB.R1A	3	10/02	PW17-1

ESTIMATED BY ____ CHECKED BY ____
DRAFTED BY ____ CHECKED BY ____
DESIGNED BY ____
JOB MANAGER ____
DESIGN SUPERVISOR ____

FED ROAD REG. NO.	STATE	CONTRACT NO.	SHEET NO.	TOTAL SHEETS
1	N.Y.	D259214	331	432

BRIDGE REHABILITATION PROJECT (ELEMENT SPECIFIC)
VARIOUS BRIDGES ON INTERSTATE 481
TOWNS OF DEWITT AND CICERO
ONONDAGA COUNTY
P.I.N. 305613 B.I.N. 1093571 & 1093572

PARAPET REPAIR TABLE (ITEM 582.05M)

BIN 1093571	STATION TO STATION	RIGHT SIDE (EAST)	LEFT SIDE (WEST)	REMARKS
SPAN 1	6+626.288 TO 6+627.588	1.300m		(I) REPAIR PROCEDURE
	6+653.795 TO 6+654.495	.700m		(V) REPLACE FULL SECTION
	6+653.595 TO 6+654.495		.900m	(V) REPLACE FULL SECTION
SPAN 2	6+654.895 TO 6+655.505	.600m		(V) REPLACE FULL SECTION
	6+654.895 TO 6+655.505		.600m	(V) REPLACE FULL SECTION
	6+654.895 TO 6+664.895	10.000m		(I) REPAIR PROCEDURE
	6+669.995 TO 6+673.695	3.700m		(I) REPAIR PROCEDURE
SPAN 3	6+731.266 TO 6+735.466	4.200m		(I) REPAIR PROCEDURE
	6+753.266 TO 6+754.266	1.000m		(V) REPLACE FULL SECTION
	6+753.266 TO 6+754.266		1.000m	(V) REPLACE FULL SECTION
SPAN 4	6+754.666 TO 6+755.666	1.000m		(V) REPLACE FULL SECTION
	6+760.466 TO 6+769.866		9.400m	(I) REPAIR PROCEDURE
	6+760.666 TO 6+778.966	18.300m		(I) REPAIR PROCEDURE*
	6+790.116 TO 6+791.616		1.500m	(I) REPAIR PROCEDURE (BACKFACE)
	6+789.316 TO 6+801.316	12.000m		(I) REPAIR PROCEDURE
	6+794.116 TO 6+803.616		9.500m	(III) REPAIR PROCEDURE
	6+813.616 TO 6+814.616	1.000m		(V) REPLACE FULL SECTION
	6+813.616 TO 6+814.616		1.000m	(IV) REPAIR PROCEDURE
SPAN 5	6+815.016 TO 6+816.016	1.000m		(V) REPLACE FULL SECTION
	6+823.166 TO 6+871.166	48.000m		(I) REPAIR PROCEDURE
	6+870.966 TO 6+874.966	4.000m		(V) REPLACE FULL SECTION
SPAN 6	6+875.366 TO 6+876.366	1.000m		(V) REPLACE FULL SECTION
	6+875.366 TO 6+895.366		20.000m	(IV) REPAIR PROCEDURE
	6+875.317 TO 6+935.317	60.000m		(III) REPAIR PROCEDURE
	6+908.317 TO 6+914.317		6.000m	(IV) REPAIR PROCEDURE
	6+920.517 TO 6+928.517		8.000m	(IV) REPAIR PROCEDURE
	6+923.317 TO 6+935.317		12.000m	(IV) REPAIR PROCEDURE
SPAN 7	6+935.717 TO 6+947.217	11.500m		(IV) REPAIR PROCEDURE
	6+949.917 TO 6+951.417	1.500m		(I) REPAIR PROCEDURE
	6+952.112 TO 6+967.112		15.000m	(IV) REPAIR PROCEDURE
	6+967.012 TO 6+969.612	2.600m		(IV) REPAIR PROCEDURE
SPAN 8	6+973.512 TO 7+010.907	37.400m		(I) REPAIR PROCEDURE
	6+981.907 TO 6+990.407		8.500m	(IV) REPAIR PROCEDURE
	6+996.907 TO 7+010.907		14.000m	(IV) REPAIR PROCEDURE
SPAN 9	7+011.307 TO 7+048.702		37.400m	(II) REPAIR PROCEDURE
SPAN 10	7+070.325 TO 7+074.325		4.000m	(IV) REPAIR PROCEDURE
SPAN 11	7+091.825 TO 7+098.825	7.000m		(I) REPAIR PROCEDURE
	7+102.525 TO 7+106.025	3.500m		(I) REPAIR PROCEDURE
	7+100.325 TO 7+108.325		8.000m	(I) REPAIR PROCEDURE
	7+109.325 TO 7+110.825	1.500m		(I) REPAIR PROCEDURE
	7+112.725 TO 7+128.725		16.000m	(I) REPAIR PROCEDURE
	7+114.825 TO 7+117.825	3.000m		(I) REPAIR PROCEDURE
SPAN 12	7+129.125 TO 7+166.825		37.700m	(II) REPAIR PROCEDURE
	7+131.925 TO 7+137.925	6.000m		(III) REPAIR PROCEDURE
	7+158.025 TO 7+159.525	1.500m		(III) REPAIR PROCEDURE
SPAN 13	7+167.225 TO 7+204.925	37.700m		(I) REPAIR PROCEDURE
	7+172.225 TO 7+184.225		12.000m	(I) REPAIR PROCEDURE
	7+189.925 TO 7+204.925		15.000m	(I) REPAIR PROCEDURE
SPAN 14	7+205.325 TO 7+243.025	37.700m		(I) REPAIR PROCEDURE
	7+205.325 TO 7+243.025		37.700m	(II) REPAIR PROCEDURE
SPAN 15	7+243.425 TO 7+281.530		38.100m	(II) REPAIR PROCEDURE
	7+248.530 TO 7+254.330	5.800m		(III) REPAIR PROCEDURE
	7+257.430 TO 7+262.030	4.600m		(I) REPAIR PROCEDURE
	7+265.030 TO 7+266.530	1.500m		(I) REPAIR PROCEDURE
	7+268.230 TO 7+271.730	3.500m		(I) REPAIR PROCEDURE

* FULL SECTION REPLACEMENT AS DIRECTED BY ENGINEER TO INCLUDE IF NECESSITY, REPLACEMENT OR REPAIR OF THE GRANITE CURB. ALL COST TO BE INCLUDED IN BID PRICE FOR ITEM 582.05M.

(BACKFACE) INDICATES REPAIR AREA IS ON THE OUTSIDE OR BACKFACE OF PARAPET. CAUTION MUST BE TAKEN WHEN WORKING OVER R.R. TRACKS.

PARAPET REPAIR TABLE (ITEM 582.05M)

BIN 1093572	STATION TO STATION	RIGHT SIDE (EAST)	LEFT SIDE (WEST)	REMARKS
SPAN 1	6+578.084 TO 6+582.084	4.000m		(I) REPAIR PROCEDURE
	6+592.589 TO 6+594.789	2.200m		(I) REPAIR PROCEDURE
	6+593.884 TO 6+600.884		7.000m	(I) REPAIR PROCEDURE (BACKFACE)
	6+597.489 TO 6+599.489	2.000m		(I) REPAIR PROCEDURE
	6+600.581 TO 6+608.297	7.700m		(I) REPAIR PROCEDURE
	6+602.697 TO 6+608.297		5.600m	(I) REPAIR PROCEDURE (BACKFACE)
SPAN 2	6+608.697 TO 6+620.197		11.500m	(I) REPAIR PROCEDURE (BACKFACE)
	6+639.497 TO 6+641.497		2.000m	(I) REPAIR PROCEDURE (BACKFACE)
	6+646.997 TO 6+653.497		6.500m	(I) REPAIR PROCEDURE (BACKFACE)
SPAN 3	6+662.597 TO 6+664.597		2.000m	(II) REPAIR PROCEDURE
	6+676.097 TO 6+684.097	8.000m		(I) REPAIR PROCEDURE
	6+697.097 TO 6+698.097	1.000m		(I) REPAIR PROCEDURE
	6+707.070 TO 6+708.070	1.000m		(V) REPLACE FULL SECTION *
	6+707.070 TO 6+708.070		1.000m	(V) REPLACE FULL SECTION *
SPAN 4	6+708.470 TO 6+709.470	1.000m		(V) REPLACE FULL SECTION
	6+715.570 TO 6+757.070	41.500m		(I) REPAIR PROCEDURE
	6+719.070 TO 6+728.070		9.000m	(I) REPAIR PROCEDURE
	6+750.420 TO 6+768.420		18.000m	(III) REPAIR PROCEDURE
	6+767.420 TO 6+768.420		1.000m	(V) REPLACE FULL SECTION
SPAN 5	6+768.820 TO 6+770.320	1.500m		(V) REPLACE FULL SECTION
	6+773.120 TO 6+786.120	13.000m		(I) REPAIR PROCEDURE
	6+778.920 TO 6+783.220		4.300m	(I) REPAIR PROCEDURE
	6+799.620 TO 6+802.120		2.500m	(I) REPAIR PROCEDURE
	6+804.620 TO 6+815.620	11.000m		(I) REPAIR PROCEDURE
	6+826.771 TO 6+828.771		2.000m	(V) REPLACE FULL SECTION
SPAN 6	6+829.171 TO 6+830.171	1.000m		(V) REPLACE FULL SECTION
	6+829.171 TO 6+830.171		1.000m	(V) REPLACE FULL SECTION
	6+830.171 TO 6+888.771		58.600m	(II) REPAIR PROCEDURE
	6+846.971 TO 6+849.971	3.000m		(I) REPAIR PROCEDURE
	6+855.621 TO 6+889.121	33.500m		(I) REPAIR PROCEDURE
SPAN 7	6+889.126 TO 6+926.916	37.400m		(I) REPAIR PROCEDURE
	6+892.221 TO 6+897.521		5.300m	(I) REPAIR PROCEDURE
	6+903.321 TO 6+907.621		4.300m	(I) REPAIR PROCEDURE
	6+909.721 TO 6+911.721		2.000m	(I) REPAIR PROCEDURE
	6+916.916 TO 6+926.916		10.000m	(III) REPAIR PROCEDURE
SPAN 8	6+927.316 TO 6+964.712	37.400m		(IV) REPAIR PROCEDURE
SPAN 9	6+965.112 TO 6+996.112	31.000m		(I) REPAIR PROCEDURE
SPAN 10	7+014.602 TO 7+023.602		9.000m	(II) REPAIR PROCEDURE
	7+020.302 TO 7+040.302	20.000m		(II) REPAIR PROCEDURE
SPAN 11	7+044.302 TO 7+046.302		2.000m	(I) REPAIR PROCEDURE
	7+060.397 TO 7+067.697	7.300m		(I) REPAIR PROCEDURE
SPAN 12	7+099.892 TO 7+101.892	2.000m		(I) REPAIR PROCEDURE
SPAN 13	7+119.492 TO 7+125.492		6.000m	(I) REPAIR PROCEDURE
	7+168.283 TO 7+186.283		18.000m	(I) REPAIR PROCEDURE
	7+168.983 TO 7+191.483	22.500m		(I) REPAIR PROCEDURE
SPAN 14	7+171.093 TO 7+191.483	20.400m		(I) REPAIR PROCEDURE
	7+165.783 TO 7+179.283		13.500m	(I) REPAIR PROCEDURE
SPAN 15	7+197.883 TO 7+199.883		2.000m	(I) REPAIR PROCEDURE
	7+198.283 TO 7+229.683	31.400m		(I) REPAIR PROCEDURE

GENERAL NOTES:

WORK ADJACENT TO JOINT BLOCK-OUT (200mm) SHALL BE INCLUDED IN THE BRIDGE JOINT REPLACEMENT ITEMS. SEE DRAWING NO. JD-53 FOR JOINT BLOCK-OUT REMOVAL DETAILS.

SOME REPAIRS ARE ON THE BACK FACE OF THE PARAPETS SOME OF THIS WORK MAY BE OVER THE RAIL ROAD TRACKS.

REFER TO DRAWING NO. PW17-1 FOR CONCRETE REMOVAL DETAILS AND NOTES.

STATIONING AND DIMENSIONS SHOWN FOR CONCRETE REMOVAL ARE APPROXIMATE AND SHALL BE FIELD VERIFIED BY CONTRACTOR AND ENGINEER.

REFER TO RECONSTRUCTION NOTES ON DRAWING NO. GN-1.

ALL DIMENSIONS ARE IN m UNLESS OTHERWISE NOTED

AS BUILT REVISIONS

SIGNATURE DATE

INTERSTATE 481
OVER
CSX RAILROAD YARD

TABLE OF PARAPET REPAIRS

STATE OF NEW YORK
DEPARTMENT OF TRANSPORTATION

FILENAME	REGION	DATE	DRAWING NO.
305613AB.R1A	3	10/02	PW17-2

ESTIMATED BY ____ DRAFTED BY ____ CHECKED BY ____
DESIGNED BY ____ CHECKED BY ____
JOB MANAGER ____
DESIGN SUPERVISOR ____

FED ROAD REG. NO.	STATE	CONTRACT NO.	SHEET NO.	TOTAL SHEETS
1	N.Y.	D259214	332	432

BRIDGE REHABILITATION PROJECT (ELEMENT SPECIFIC)
VARIOUS BRIDGES ON INTERSTATE 481
TOWNS OF DEWITT AND CICERO
ONONDAGA COUNTY
P.I.N. 305613 B.I.N. 1093572

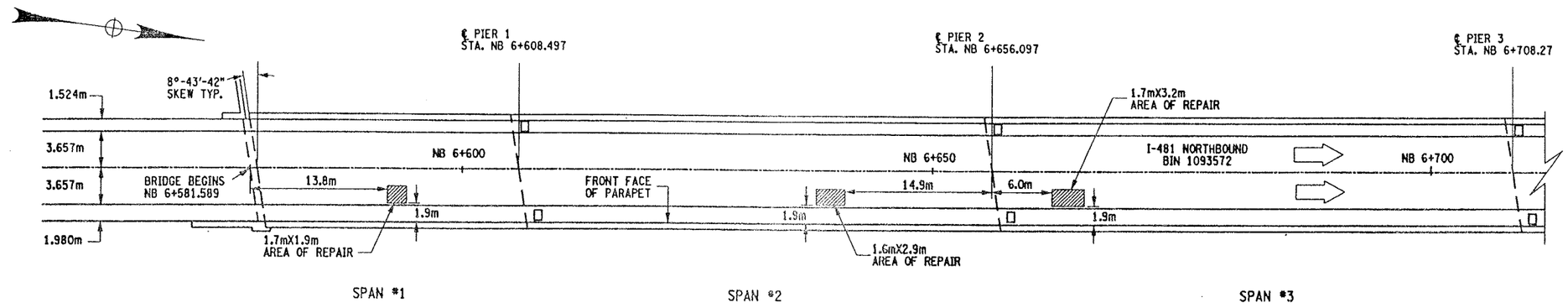

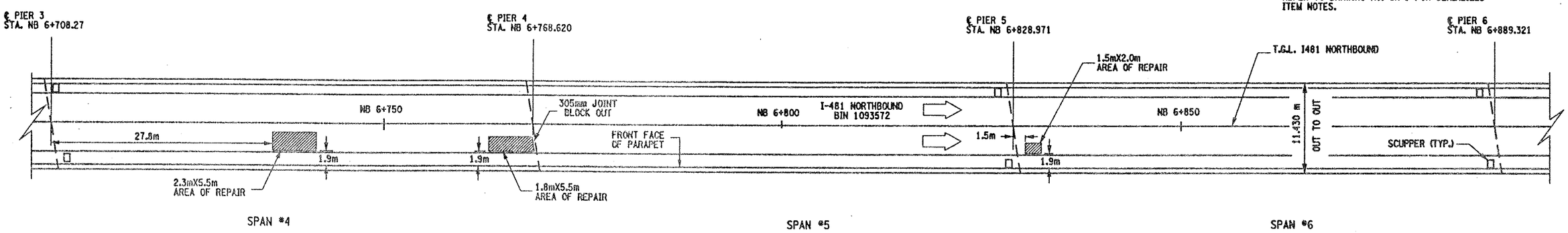

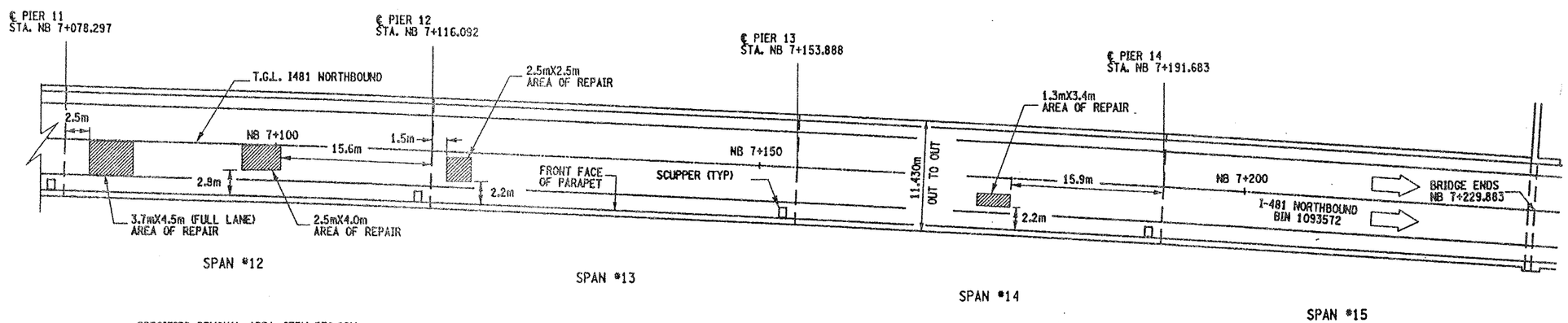

PLAN VIEW OF SPOT DECK REPAIRS

NOT TO SCALE

ALL DIMENSIONS ARE IN m UNLESS OTHERWISE NOTED

GENERAL NOTES:

THIS WORK ONLY PERTAINS TO BIN 1093572 NB.

THE AREAS SHOWN ARE THE RESULTS OF FIELD INVESTIGATIONS AND ARE ONLY APPROXIMATE. THE ACTUAL LIMITS SHALL BE AS DIRECTED BY ENGINEER.

NO FULL DEPTH SLAB REPAIRS ARE EXPECTED AT THESE LOCATIONS.

REFER TO DRAWING NO. GN-1 FOR SERIALIZED ITEM NOTES.

REMOVAL NOTES:

ORIGINAL BRIDGE DECK 203mm MONOLITHIC SLAB. A 38mm CONC. OVERLAY HAS BEEN ADDED.

THESE LOCATIONS ARE CURRENTLY FILLED WITH ASPHALT (BLACKTOP). DEPTH OF ASPHALT IS UNKNOWN, ESTIMATED AT @ 38mm. THE REMOVAL OF THE ASPHALT AND CONCRETE TO LIMITS SHOWN TO BE PAID UNDER ITEM 579.02M.

REMOVE CONCRETE TO LIMITS SHOWN AND TO SOUND CONCRETE, AS ORDER BY ENGINEER.

ALL AREAS THAT ARE REPAIRED SHALL ALSO RECEIVE ITEM 558.01 - TRANSVERSE SAWCUT GROOVING AND ITEM 18559.1896M - PROTECTIVE SEALING.

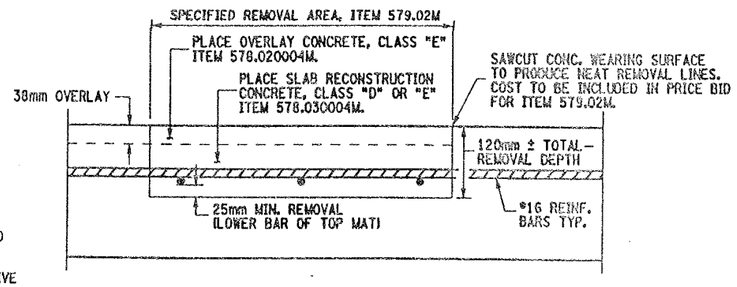

CROSS SECTION VIEW THROUGH REPAIR LOCATION

NOT TO SCALE

ITEMS USED:

ITEM 558.01M - TRANSVERSE SAWCUT GROOVING (SM)
ITEM 18559.1896M - PROTECTIVE SEALING FOR STRUCT. CONC. (SM)
ITEM 578.020004M - OVERLAY CONCRETE, CLASS "E" (SM)
ITEM 578.030004M - SLAB RECONSTRUCTION CONCRETE, CLASS "D" OR "E" (SM)
ITEM 579.02M - REINFORCING BAR EXPOSURE (SM)

AS BUILT REVISIONS

SIGNATURE DATE

INTERSTATE 481
OVER
CSX RAILROAD YARD
BRIDGE DECK REPAIRS

STATE OF NEW YORK
DEPARTMENT OF TRANSPORTATION

FILENAME	REGION	DATE	DRAWING NO.
305613AB.R1A	3	10/02	DR17-1

DESIGN SUPERVISOR ____ JOB MANAGER ____ DESIGNED BY ____ CHECKED BY ____ ESTIMATED BY ____ DRAFTED BY ____ CHECKED BY ____

10935 71

FED ROAD REG. NO.	STATE	CONTRACT NO.	SHEET NO.	TOTAL SHEETS
1	N.Y.	D259214	341	432

BRIDGE REHABILITATION PROJECT (ELEMENT SPECIFIC)

VARIOUS BRIDGES ON INTERSTATE 481

TOWNS OF DEWITT AND CICERO

ONONDAGA COUNTY

P.I.N. 305613 | B.I.N. VARIOUS

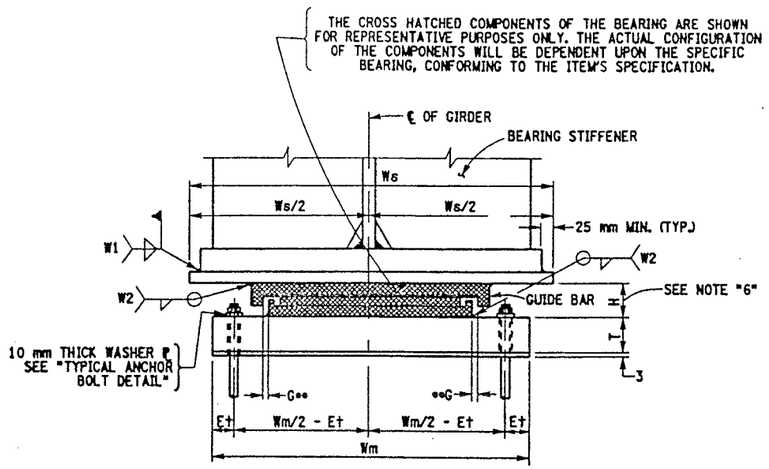

FRONT VIEW WITH ANCHOR BOLTS UNDER SOLE PLATE

NOT TO SCALE

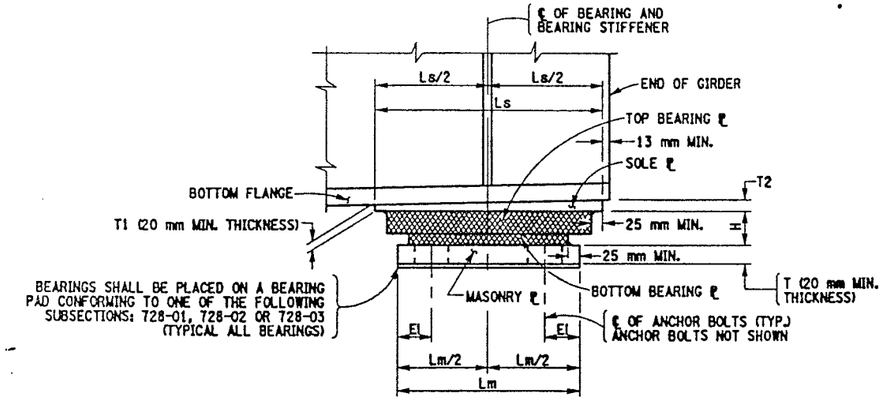

SIDE VIEW AT END OF GIRDER

NOT TO SCALE

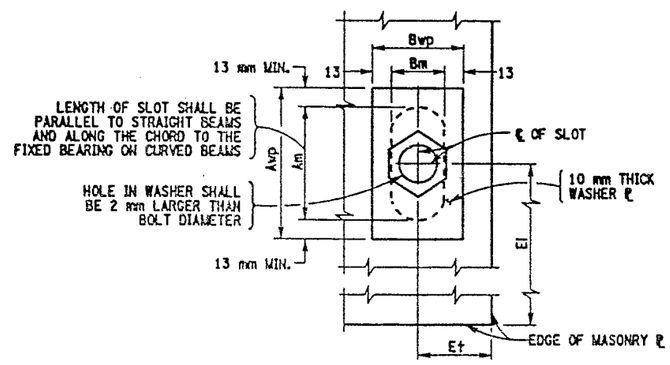

TYPICAL ANCHOR BOLT DETAIL

NOT TO SCALE

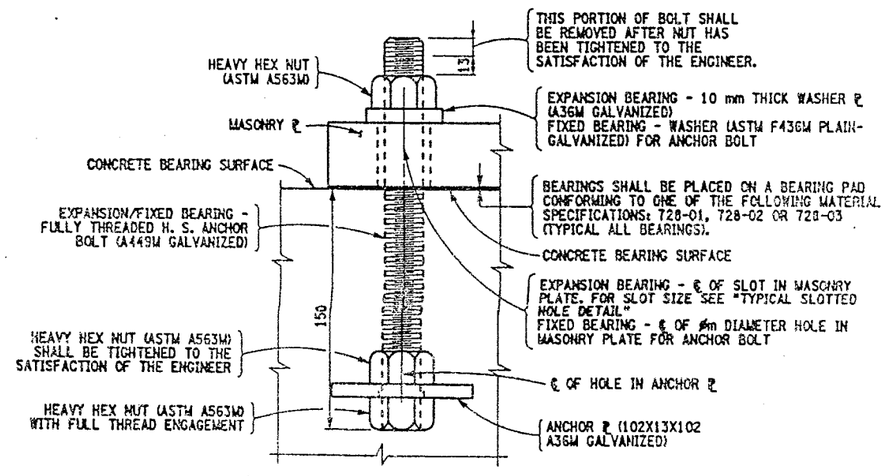

OPTIONAL ANCHOR BOLT DETAIL WITH ANCHOR PLATE ON NEW PEDESTALS

NOT TO SCALE

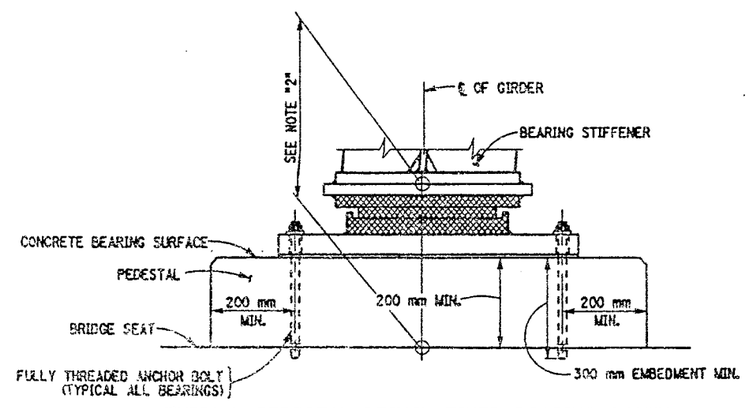

TYPICAL PEDESTAL DETAIL FIXED BEARING SHOWN - EXPANSION BEARING SIMILAR

NOT TO SCALE

NOTES:

THE CONTRACTOR SHALL SUPPLY MULTI-ROTATIONAL STRUCTURAL BRIDGE BEARINGS CONFORMING TO THE REQUIREMENTS OF STANDARD SPECIFICATION SECTION 565 AND SUBJECT TO THE FOLLOWING CONDITIONS:

1. THE BEARING DEVICES SUPPLIED SHALL BE CAPABLE OF TRANSMITTING THE LOADS AND MOVEMENT SHOWN ON THESE PLANS.
2. THE DIMENSION "H" IN THE BEARING TABLE REPRESENTS THE ASSUMED TOTAL HEIGHT OF BEARING MECHANISM BETWEEN THE SOLE PLATE AND MASONRY PLATE USED BY THE DESIGNER TO ESTABLISH THE PEDESTAL ELEVATIONS. THE MINIMUM PEDESTAL HEIGHT SHALL NOT BE CHANGED WITHOUT WRITTEN APPROVAL OF THE DEPUTY CHIEF ENGINEER (STRUCTURES).
3. MASONRY PLATES ARE TO BE DESIGNED. THE MINIMUM CONCRETE EDGE DISTANCE SHALL BE 75 mm AND THE MINIMUM ANCHOR BOLT COVER SHALL BE 200 mm.
4. THE BEARING DEVICE, MASONRY PLATE, SOLE PLATE, ANCHOR BOLTS, NUTS, WASHER PLATES AND BEARING PAD SHALL BE INCLUDED IN THE UNIT PRICE BID FOR THE BEARING ITEMS.
5. ALL EXPANSION BEARINGS SHALL HAVE A MAXIMUM FRICTION COEFFICIENT OF 3%.
6. IF THE ANCHOR BOLTS ARE SET UNDER THE SOLE PLATE, A MINIMUM CLEARANCE EQUAL TO TWO TIMES THE THICKNESS OF ANCHOR NUT PLUS 25 mm SHALL BE MAINTAINED BETWEEN THE TOP OF MASONRY PLATE AND BOTTOM OF THE SOLE PLATE.
7. ALL STEEL SHALL CONFORM TO ASTM A588M.
8. ALL METAL COMPONENTS OF THE BEARING SYSTEM WHICH ARE LIABLE TO COME INTO CONTACT DURING THE TRANSLATION SHALL HAVE A TEFLON SLIDING SURFACE FINISH.
9. ALL STEEL FABRICATION SHALL CONFORM TO THE PROVISIONS OF THE LATEST EDITION OF THE NEW YORK STATE STEEL CONSTRUCTION MANUAL.

WHENEVER JACKING OF THE SUPERSTRUCTURE IS NEEDED TO RESET THE BEARINGS, THE CONTRACTOR SHALL SUBMIT A JACKING SEQUENCE TO THE E.I.C. FOR APPROVAL.

LIST OF ITEMS USED:

ITEM 565.1522M - TYPE M.R. EXPANSION BEARING (1001 TO 2000KN) (EA)
ITEM 565.1722M - TYPE M.R. FIXED BEARING (1001 TO 2000KN) (EA)

*ONE WAY LONGITUDINAL MOVEMENT IS THE MAXIMUM ONE WAY MOVEMENT (EXPANSION OR CONTRACTION) OF THE SUPERSTRUCTURE WHEN BEARINGS ARE SET @ 20°C PLUS 25 MILLIMETERS OF TOLERANCE.

**ON WIDE STRUCTURES AND ON CURVED STRUCTURES PROVISIONS SHALL BE MADE FOR LIMITED LATERAL MOVEMENT.

ALL DIMENSIONS ARE IN mm UNLESS OTHERWISE NOTED

AS BUILT REVISIONS

SIGNATURE | DATE

MULTI ROTATIONAL BEARINGS

STATE OF NEW YORK
DEPARTMENT OF TRANSPORTATION

FILENAME	REGION	DATE	DRAWING NO.
305613AE.M1A	3	10/02	BR-1

DESIGN SUPERVISOR ____ JOB MANAGER ____ DESIGNED BY ____ ESTIMATED BY ____ DRAFTED BY ____ CHECKED BY ____ CHECKED BY ____

FED ROAD REG. NO.	STATE	CONTRACT NO.	SHEET NO.	TOTAL SHEETS
1	N.Y.	D259214	342	432

BRIDGE REHABILITATION PROJECT (ELEMENT SPECIFIC)

VARIOUS BRIDGES ON INTERSTATE 481

TOWNS OF DEWITT AND CICERO

ONONDAGA COUNTY

P.I.N. 305613 B.I.N. VARIOUS

BEARING TABLE

BIN	LOCATION	FIX./ EXP.	ITEM NO.	QUAN. REQ'D.	CAPACITY (KN) VERT.	CAPACITY (KN) HORZ.	*ONE WAY LONGIT. MOVEMENT	**(G) GUIDE CLEARANCE	MASONRY ℄ Lm	Wm	T	Et	El	Am	Bm	WASHER ℄ Awp	Bwp	SOLE ℄ Ls	Ws	T1	T2	BRG. H	ANCHOR BOLTS ø	BOLTS/BRG.	WELD SIZE W1	W2
1093571	PIER 4 @ 5 & 8 - PIER 5 @ 13 & 16	EXP.	565.1522M	4	1 556.8	295.79	63 mm		445	770	35	80	110	78	48	104	74	545	815	30	30	162	38	4	8	8
1093571	PIER 4 @ 6 & 7 - PIER 5 @ 14 & 15	EXP.	565.1522M	4	1 556.8	295.79	63 mm		445	770	35	80	110	78	48	104	74	545	660	30	30	162	38	4	8	8
1093571	PIER 4 @ 1 & 4 - PIER 5 @ 9 & 12	FIX.	565.1722M	4	1 556.8	295.79	-		445	665	62	80	110	-	-	-	-	395	815	60	60	104	38	4	8	8
1093571	PIER 4 @ 2, 3 - PIER 5 @ 10 & 11	FIX.	565.1722M	4	1 556.8	295.79	-		445	665	62	80	110	-	-	-	-	395	660	60	60	104	38	4	8	8
1002131	PIER 1 @ 1 & 8	FIX.	565.1722M	2	333.6	63.38	-		260	530	65	50	84	-	-	-	-	240	360	45	45	76	25	4	8	8
1002131	PIER 1 @ 2 - 7	FIX.	565.1722M	6	333.6	63.38	-		260	530	40	50	84	-	-	-	-	240	360	20	20	76	25	4	8	8
1002131	PIER 1 @ 9 - 16	EXP.	565.1522M	8	444.8	84.51	42 mm		260	530	40	50	84	65	35	91	61	360	360	20	20	115	25	4	8	8
1002131	PIER 2 @ 17 & 24	FIX.	565.1722M	2	444.8	84.51	-		280	530	51	50	84	-	-	-	-	260	360	20	20	84	25	4	8	8
1002131	PIER 2 @ 18 - 23	FIX.	565.1722M	6	444.8	84.51	-		280	530	40	50	84	-	-	-	-	260	360	20	20	84	25	4	8	8
1002131	PIER 2 @ 25 - 32	EXP.	565.1522M	8	333.6	63.38	33 mm		280	530	40	50	84	65	35	91	61	340	360	20	20	107	25	4	8	8
1002132	PIER 1 @ 1 & 6	FIX.	565.1722M	2	333.6	63.38	-		250	560	64	50	84	-	-	-	-	250	360	44	44	76	25	4	8	8
1002132	PIER 1 @ 2 - 5	FIX.	565.1722M	4	333.6	63.38	-		250	560	40	50	84	-	-	-	-	250	360	20	20	76	25	4	8	8
1002132	PIER 1 @ 7 - 12	EXP.	565.1522M	6	667.2	126.77	42 mm		304	670	40	50	84	65	35	91	61	400	500	20	20	123	25	4	8	8
1002132	PIER 2 @ 13 - 18	FIX.	565.1722M	6	667.2	126.77	-		304	670	40	50	84	-	-	-	-	300	500	20	20	86	25	4	8	8
1002132	PIER 2 @ 19 & 24	EXP.	565.1522M	2	333.6	63.38	33 mm		270	560	50	50	84	65	35	91	61	350	360	30	30	107	25	4	8	8
1002132	PIER 2 @ 20 - 23	EXP.	565.1522M	4	333.6	63.38	33 mm		270	560	40	50	84	65	35	91	61	350	360	20	20	107	25	4	8	8

T2 IS UPSTATION OF T1.

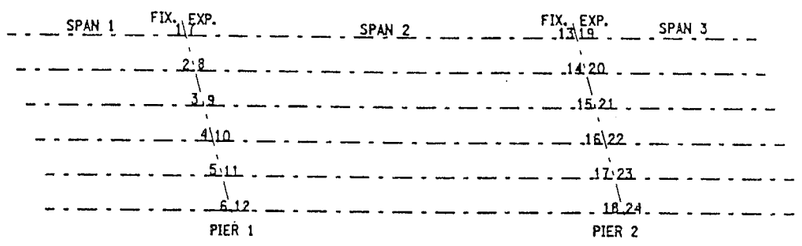

BEARING LOCATION SCHEMATIC

BIN 1002132

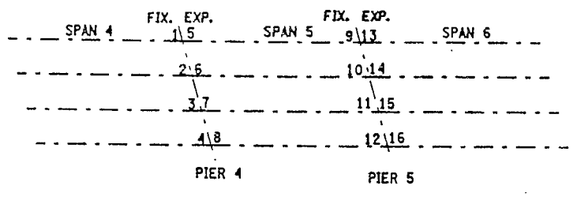

BEARING LOCATION SCHEMATIC

BIN 1093571

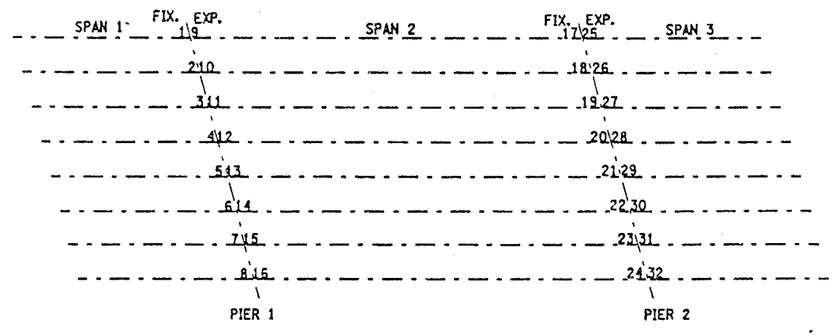

BEARING LOCATION SCHEMATIC

BIN 1002131

ALL DIMENSIONS ARE IN m UNLESS OTHERWISE NOTED

AS BUILT REVISIONS

SIGNATURE DATE

MULTI ROTATIONAL BEARINGS

STATE OF NEW YORK
DEPARTMENT OF TRANSPORTATION

FILENAME	REGION	DATE	DRAWING NO.
305613AE.M1A	3	10/02	BR-2

DESIGN SUPERVISOR ____ JOB MANAGER ____ DESIGNED BY ____ ESTIMATED BY ____ DRAFTED BY ____ CHECKED BY ____ CHECKED BY ____

1093572

FED ROAD REG. NO.	STATE	CONTRACT NO.	SHEET NO.	TOTAL SHEETS
1	N.Y.	D259214	350	432

BRIDGE REHABILITATION PROJECT (ELEMENT SPECIFIC)
VARIOUS BRIDGES ON INTERSTATE 481
TOWNS OF DEWITT AND CICERO
ONONDAGA COUNTY
P.I.N. 305613 B.I.N. 1093571 & 1093572

PIER	SPAN-GIRDER	EXP. BRG. TYPE	SOLE ℄-DIM. "A"
SB-P1	2 - ALL	III	584
SB-P3	4 - 1&4	II	813
SB-P3	4 - 2&3	II	660
SB-P6	7 - 1&4	II	508
SB-P6	7 - 2&3	I	610
SB-P7	8 - 1&4	I	635
SB-P7	8 - 2&3	I	610
SB-P9	10 - ALL	I	660
SB-P10	11 - 1&4	I	635
SB-P10	11 - 2&3	I	610
SB-P11	12 - 1&4	I	635
SB-P11	12 - 2&3	I	610
SB-P13	14 - 1&4	I	635
SB-P13	14 - 2&3	I	610
NB-P1	1 - ALL	III	584
NB-P2	3 - 1&4	III	762
NB-P2	3 - 2&3	III	711
NB-P3	4 - 1&4	II	813
NB-P3	4 - 2&3	II	660
NB-P4	5 - 1&4	II	813
NB-P4	5 - 2&3	II	660
NB-P6	7 - 1&4	II	508
NB-P6	7 - 2&3	II	610
NB-P7	8 - 1&4	II	635
NB-P7	8 - 2&3	I	610
NB-P8	9 - 1&4	I	635
NB-P8	9 - 2&3	I	610
NB-P10	11 - 1&4	I	635
NB-P10	11 - 2&3	I	610
NB-P11	12 - 1&4	I	635
NB-P11	12 - 2&3	I	610

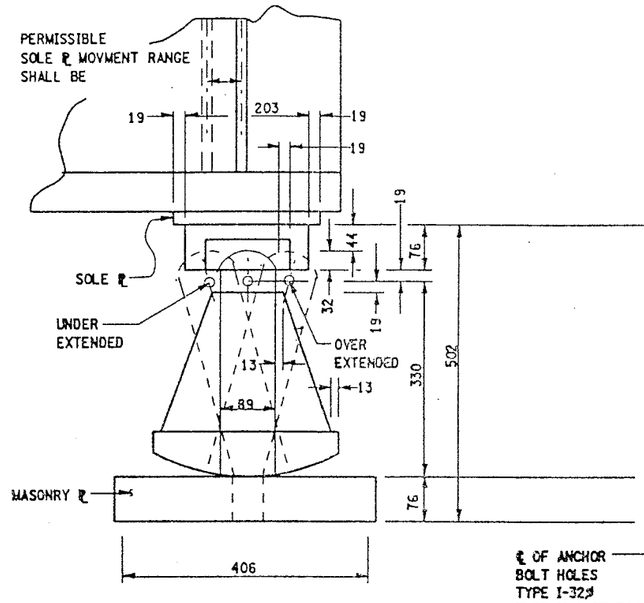

SIDE ELEVATION

NOT TO SCALE

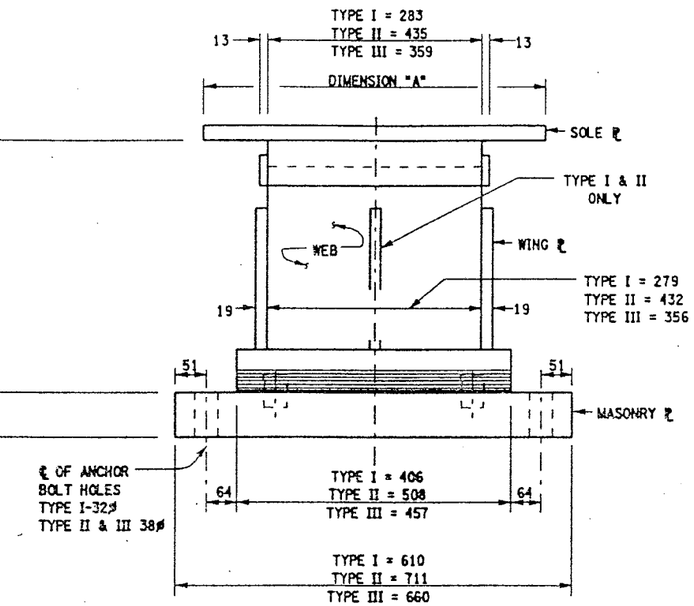

END ELEVATION

NOT TO SCALE

EXISTING HIGH ROCKER EXPANSION BEARING
BIN 1093571 & BIN 1093572

BRIDGE BEARING RESTORATION NOTES:

1. BRIDGE BEARING RESTORATION ITEM 15565.4302M SHALL INCLUDE ALL DESIGNATED WORK AS PER THE SPECIFICATION.
2. STRUCTURAL LIFTING SHALL BE USED WITH ALL EXPANSION BEARING RESTORATION.
3. IF THE CONTRACTOR ELECTS TO LIFT ONLY ONE GIRDER AT A TIME PER SPAN (TO A MAXIMUM OF 3 mm TO REMOVE LOAD FROM BEARINGS), NO VEHICULAR TRAFFIC RESTRICTIONS WILL BE REQUIRED AS STATED IN SPECIFICATIONS SECTON 585-STRUCTURAL LIFTING OPERATIONS.
4. BEARING RESTORATION SHALL AS A MINIMUM, AND IN ALL CASES INCLUDE REPLACEMENT OF BRONZE PLATE.
5. FIXED BEARING TO BE CLEANED IN PLACE. DO NOT DISASSEMBLE.
6. ON BINS 1093571 & 1093572, BRIDGE BEARING RESTORATION ITEM 15564.4302M FOR THE HIGH ROCKER BEARINGS SHALL INCLUDE ONLY THOSE BEARINGS SHOWN ON DWG BR-11 WHICH ARE EITHER OVER EXTENDED OR UNDER EXTENDED MORE THAN 5° FROM WHAT SHOULD BE ANTICIPATED FOR THE AMBIENT TEMPERATURE. THOSE EXPANSION BEARINGS WHICH ARE BEING RESTORED SHALL BE RESET TO ORIGINAL SPECIFICATIONS.

JACKING NOTES:

THE METHOD OF LIFTING SHALL BE APPROVED BY THE DEPUTY CHEIF ENGINEER (STRUCTURES), DSES, TWO WEEKS PRIOR TO THE START OF THE WORK.

NO LIFTING WILL BE ALLOWED UNTIL ALL TEMPORARY SUPPORTS ARE SECURED.

WHEN POSSIBLE, THERE WILL BE NO LIVE LOAD DURING LIFTING.

LIFTING SHALL BE CONFINED TO ONE END OF A SPAN AT ANY ONE TIME.

IF THE CONTRACTOR ELECTS TO LIFT ONLY ONE GIRDER AT A TIME PER PIER (TO A MAXIMUM OF 3 mm TO REMOVE LOAD FROM BEARING), NO VEHICULAR TRAFFIC RESTRICTIONS WILL BE REQUIRED AS STATED IN THE SPECIFICATION SECTION 585-STRUCTURAL LIFTING OPERATIONS.

ITEM CLARIFICATION NOTE:

ITEM 589.52NNNNM, REMOVAL OF EXISTING STEEL IS A SERIALIZED ITEM AND THE FOLLOWING PAY ITEMS SHALL BE INCORPORATED BY BRIDGE:
BIN 1093571 SB SHALL USE ITEM 589.520001M
BIN 1093572 NB SHALL USE ITEM 589.520002M

ITEM 571.01NNNNM - THE TREATMENT AND DISPOSAL OF PAINT REMOVAL WASTE IS A SERIALIZED ITEM AND THE FOLLOWING PAY ITEMS SHALL BE INCORPORATED BY BRIDGE:
BIN 1093571 SB SHALL USE ITEM 571.010001M
BIN 1093572 NB SHALL USE ITEM 571.010002M

ITEM 570.10NNNNM - ENVIRONMENTAL GROUND PROTECTION IS A SERIALIZED ITEM AND THE FOLLOWING PAY ITEMS SHALL BE INCORPORATED BY BRIDGE.
BIN 1093571 SB SHALL USE ITEM 570.090001M
BIN 1093572 NB SHALL USE ITEM 570.090002M

ITEM 570.09NNNNM - ENVIRONMENTAL WATER PROTECTION IS A SERIALIZED ITEM AND THE FOLLOWING PAY ITEMS SHALL BE INCORPORATED BY BRIDGE
BIN 1093571 SB SHALL USE ITEM 570.100001M
BIN 1093572 NB SHALL USE ITEM 570.100002M

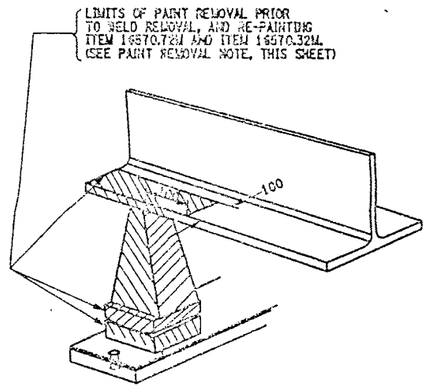

PAINT REMOVAL DETAIL

SCALE: 1 TO 5

PAINT REMOVAL NOTE:

1. IN CONJUNCTION WITH THE USE OF ITEM 16570.32M AND ITEM 16570.76M, ITEM 571.01NNNNM - TREATMENT & DISPOSAL OF PAINT REMOVAL WASTE AND EITHER ITEM 570.10NNNNM - ENVIRONMENTAL GROUND PROTECTION OR ITEM 570.09NNNNM - ENVIRONMENTAL WATER PROTECTION SHALL ALSO BE INCORPORATED DURING THE PAINT REMOVAL OPERATIONS.
2. ALL NEW PARTS INSTALLED AT THIS LOCATION SHALL BE INCLUDED IN THE UNIT PRICE BID FOR ITEM 15565.4302. THE CONTRACTOR WILL BE PAID FOR A QUANTITY OF ONE FOR ALL NEW MATERIALS AT THIS LOCATION.
3. ALL EXISTING SURFACES SHALL BE CLEANED AND LUBRICATED TO ENSURE FREE MOVEMENT, ITEM 15565.4302M.

LIST OF ITEMS USED:

ITEM 571.010001M - TREATMENT AND DISPOSAL OF PAINT REMOVAL WASTE (CM)
ITEM 571.010002M - TREATMENT AND DISPOSAL OF PAINT REMOVAL WASTE (CM)
ITEM 15565.4302M - BRIDGE BEARING RESTORATION (EA)

ALL DIMENSIONS ARE IN mm UNLESS OTHERWISE NOTED

AS BUILT REVISIONS

SIGNATURE DATE

INTERSTATE 481 SB & NB
OVER
CSX RAILROAD
BEARING RESTORATION DETAILS

STATE OF NEW YORK
DEPARTMENT OF TRANSPORTATION

FILENAME	REGION	DATE	DRAWING NO.
305613ZZJM1A	3	10/02	BR-10

DESIGN SUPERVISOR ____ JOB MANAGER ____ DESIGNED BY ____ CHECKED BY ____ ESTIMATED BY ____ DRAFTED BY ____ CHECKED BY ____

FED ROAD REG. NO.	STATE	CONTRACT NO.	SHEET NO.	TOTAL SHEETS
1	N.Y.	D259214	351	432

BRIDGE REHABILITATION PROJECT (ELEMENT SPECIFIC)
VARIOUS BRIDGES ON INTERSTATE 481
TOWNS OF DEWITT AND CICERO
ONONDAGA COUNTY
P.I.N. 305613 | B.I.N. 1093571 & 1093572

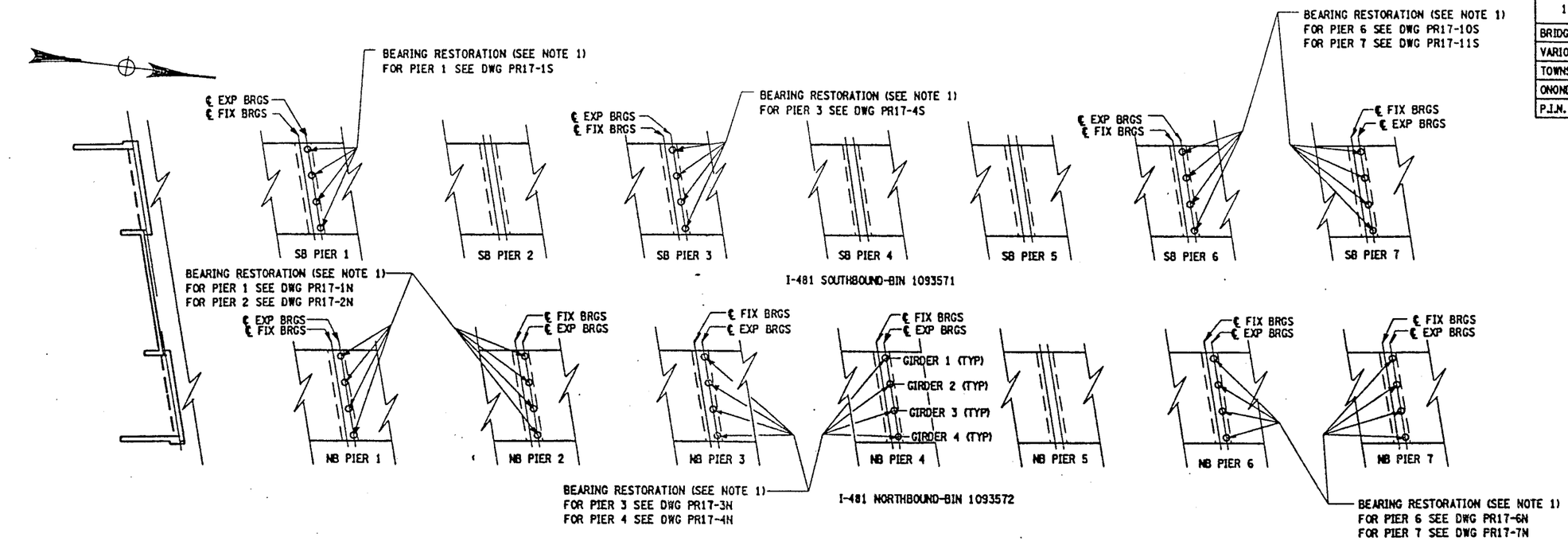

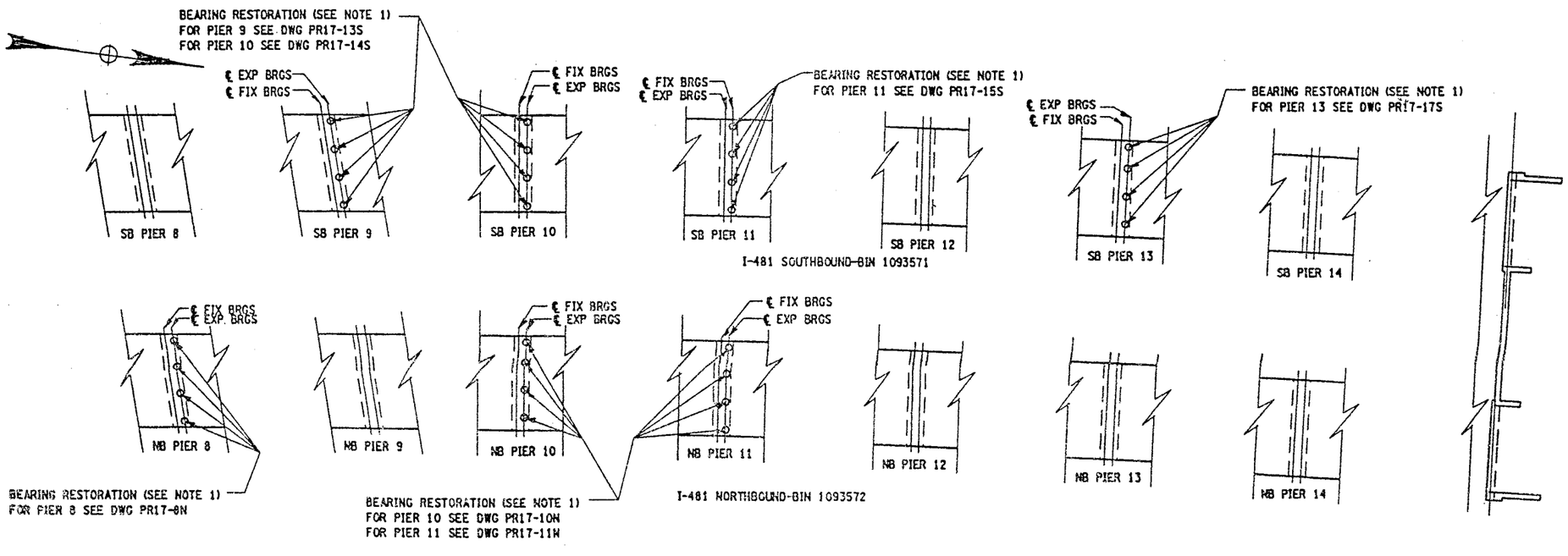

BRIDGE PLAN SCHEMATIC
SCALE 1:300

NOTES

1. BRIDGE BEARING RESTORATION ITEM 15565.4302M AND EITHER STRUCTURAL LIFTING OPERATION -(TYPE B) ITEM 585.02M OR STRUCTURAL LIFTING OPERATION -(TYPE C) ITEM 585.03M

ALL DIMENSIONS ARE IN m UNLESS OTHERWISE NOTED

AS BUILT REVISIONS

SIGNATURE | DATE

INTERSTATE 481 SB & NB
OVER
CSX RAILROAD

BEARING RESTORATION DETAILS
BRIDGE PLAN SCHEMATIC

STATE OF NEW YORK
DEPARTMENT OF TRANSPORTATION

FILENAME	REGION	DATE	DRAWING NO.
305613ZZM1A	3	10/02	BR-11

CHECKED BY
DRAFTED BY
ESTIMATED BY
DESIGNED BY
JOB MANAGER
DESIGN SUPERVISOR

FED ROAD REG. NO.	STATE	CONTRACT NO.	SHEET NO.	TOTAL SHEETS
1	N.Y.	D259214	364	432

BRIDGE REHABILITATION PROJECT (ELEMENT SPECIFIC)
VARIOUS BRIDGES ON INTERSTATE 481
TOWNS OF DEWITT AND CICERO
ONONDAGA COUNTY
P.I.N. 305613 | B.I.N. ALL BINS

BRIDGE JOINT TABLE

B.I.N. NUMBER	JOINT LOCATION	JOINT SKEW	SPAN(S) LENGTH FOR JOINT (METERS)	JOINT BEND LOCAT'N RT	JOINT BEND LOCAT'N LT	EXISTING JOINT TYPE	PROPOSED JOINT TYPE	CURB TO CURB DISTANCE (METERS) (SEE NOTES)	FASCIA & MEDIAN LENGTH (METERS) LT/RT	TOTAL LENGTH (METERS)	JOINT ITEM NUMBER(S)	DRAWING NUMBER SECT VIEW	DRAWING NUMBER PLAN VIEW	DRAWING NUMBER FASCIA DETAIL
1093572	SOUTH ABUT.	8°-43'-42"	26.212	N	N	ACJ/ADA	MOD-1	10.330	.616/.616	11.562	566.01M	JD-55	JD-53	JD-56
	PIER 1	8°-43'-42"	46.939	N	N	OPEN	NONE	10.330	.616/.616	11.562	——	JD-56	——	——
	PIER 2	8°-43'-42"	51.511	N	N	OPEN	NONE	10.330	.616/.616	11.562	——	JD-56	——	——
	PIER 3	8°-43'-42"	59.740	N	N	OPEN	NONE	10.330	.616/.616	11.562	——	——	——	——
	PIER 4	8°-43'-42"	59.740	N	N	OPEN	NONE	10.330	.616/.616	11.562	——	——	——	——
	PIER 5	8°-43'-42"	59.740	N	N	OPEN	NONE	10.330	.616/.616	11.562	——	——	——	——
	PIER 6	8°-43'-42"	37.490	N	N	ACJ	MOD-1	10.330	.616/.616	11.562	566.01M	JD-55	JD-54	JD-56
	PIER 7	8°-43'-42"	37.490	N	N	ACJ	MOD-1	10.330	.616/.616	11.562	566.01M	JD-55	JD-54	JD-56
	PIER 8	8°-43'-42"	37.490	N	N	ACJ	MOD-1	10.330	.616/.616	11.562	566.01M	JD-55	JD-54	JD-56
	PIER 9	8°-43'-42"	37.490	N	N	ACJ	MOD-1	10.330	.616/.616	11.562	566.01M	JD-55	JD-54	JD-56
	PIER 10	0°-00'-00"	37.490	N	N	ACJ	MOD-1	10.210	.610/.610	11.562	566.01M	JD-55	JD-54	JD-56
	PIER 11	0°-00'-00"	37.490	N	N	ACJ	MOD-1	10.210	.610/.610	11.430	566.01M	JD-55	JD-54	JD-56
	PIER 12	0°-00'-00"	37.490	N	N	ACJ	MOD-1	10.210	.610/.610	11.430	566.01M	JD-55	JD-54	JD-56
	PIER 13	0°-00'-00"	37.490	N	N	ACJ	MOD-1	10.210	.610/.610	11.430	566.01M	JD-55	JD-54	JD-56
	PIER 14	0°-00'-00"	37.490	N	N	ACJ	MOD-1	10.210	.610/.610	11.430	566.01M	JD-55	JD-54	JD-56
	NORTH ABUT.	0°-00'-00'	——	N	N	ADA	RADA	10.210	.610/.610	11.430	——	JD-55	JD-54	JD-56
1093671	SOUTH ABUT.	10°-12'-45"	——	N	N	ADA	RADA	15.795	.464/.464	16.724	——	JD-58	JD-57	JD-59
	NORTH ABUT.	10°-12'-45"	34.747	N	N	ACJ/ADA	MAC-5	15.795	.464/.464	16.724	567.35M	JD-58	JD-57	JD-59
1093672	SOUTH ABUT.	10°-12'-45"	——	N	N	ADA	RADA	15.795	.464/.464	16.724	——	JD-58	JD-57	JD-59
	NORTH ABUT.	10°-12'-45"	34.747	N	N	ACJ/ADA	MAC-5	15.795	.464/.464	16.724	567.35M	JD-58	JD-57	JD-59

LEGEND

EXISTING JOINT TYPE:

ACJ = ARMORED COMPRESSION JOINT SYSTEM
MOD = MODULAR JOINT SYSTEM
MAC = MODIFIED ARMORED COMPRESSION SYSTEM (NO HORIZ. ARMORING ANGLE)
ADA = ARMORED DECK ANGLE
SS = STRIP SEAL JOINT
OPEN = OPEN JOINT

PROPOSED JOINT TYPE:

MAC-1 = MOD. ARM./COMP. SEAL JT. SYS. (A-1)
MAC-2 = MOD. ARM./COMP. SEAL JT. SYS. (A-2)
MAC-5 = MOD. ARM./COMP. SEAL JT. SYS. (A-5)
MAC-6 = MOD. ARM./COMP. SEAL JT. SYS. (A-6)
RCS = REPLACE EXISTING COMPRESSION SEAL
RADA = REMOVE ARMOR DECK ANGLE
MOD-1 = MODULAR JT. SYS. (ONE-CELL)
MOD-2 = MODULAR JT. SYS. (TWO-CELL)

JOINT BEND LOCATION:

N = NO BENDS
CRB = CURB LINE
PAV'T = PAVEMENT

GENERAL NOTES:

- ALL MEASUREMENTS SHALL BE FIELD VERIFIED.
- CURB TO CURB LENGTHS ARE MEASURED ALONG ℄ OF JOINT.
- MULTIPLE DIMENSIONS ARE SHOWN LOOKING UP-STATION, LEFT TO RIGHT.
- ALL DIMENSIONS ARE SHOWN IN METERS.

INFORMATIONAL NOTES:

BIN 1093572

CLEAN EXISTING DRAINAGE SYSTEMS AT OPEN JOINTS (OPEN JOINTS TO REMAIN). AS SHOWN ON CONTRACT PLANS OR AS DIRECTED BY THE ENGINEER.

FOR JOINT DETAILS REFER TO THE FOLLOWING DRAWINGS:

DWG. NO. JD-1 - MODIFIED ARMORED COMPRESSION SEAL JOINT SYSTEM.
DWG. NO. JD-24 - ONE-CELL MODULAR JOINT SYSTEM.
DWG. NO. JD-25 - TWO-CELL MODULAR JOINT SYSTEM.

LIST OF BRIDGE JOINT ITEMS USED:

ITEM 566.01M - MODULAR EXP. JOINT SYSTEM ONE-CELL (m)
ITEM 566.02M - MODULAR EXP. JOINT SYSTEM TWO-CELL (m)
ITEM 567.31M - MODIFIED ARMORED JOINT SYSTEM W/ COMP. SEAL TYPE A1 (m)
ITEM 567.32M - MODIFIED ARMORED JOINT SYSTEM W/ COMP. SEAL TYPE A2 (m)
ITEM 567.35M - MODIFIED ARMORED JOINT SYSTEM W/ COMP. SEAL TYPE A5 (m)
ITEM 567.36M - MODIFIED ARMORED JOINT SYSTEM W/ COMP. SEAL TYPE A6 (m)
ITEM 16567.640001M - REPLACE COMPRESSION SEAL FOR EXISTING BRIDGE JOINTS (m)

ALL DIMENSIONS ARE IN m UNLESS OTHERWISE NOTED

AS BUILT REVISIONS

SIGNATURE DATE

INTERSTATE 481 VARIOUS BRIDGES

BRIDGE JOINT TABLE

STATE OF NEW YORK
DEPARTMENT OF TRANSPORTATION

FILENAME	REGION	DATE	DRAWING NO.
305613AJJA1	3	10/02	JT-4

CHECKED BY
DRAFTED BY
ESTIMATED BY
CHECKED BY
DESIGNED BY
JOB MANAGER
DESIGN SUPERVISOR

FED ROAD REG. NO.	STATE	CONTRACT NO.	SHEET NO.	TOTAL SHEETS
1	N.Y.	D259214	365	432

BRIDGE REHABILITATION PROJECT (ELEMENT SPECIFIC)

VARIOUS BRIDGES ON INTERSTATE 481

TOWNS OF DEWITT AND CICERO

ONONDAGA COUNTY

P.I.N. 305613 | B.I.N. ALL BIN'S

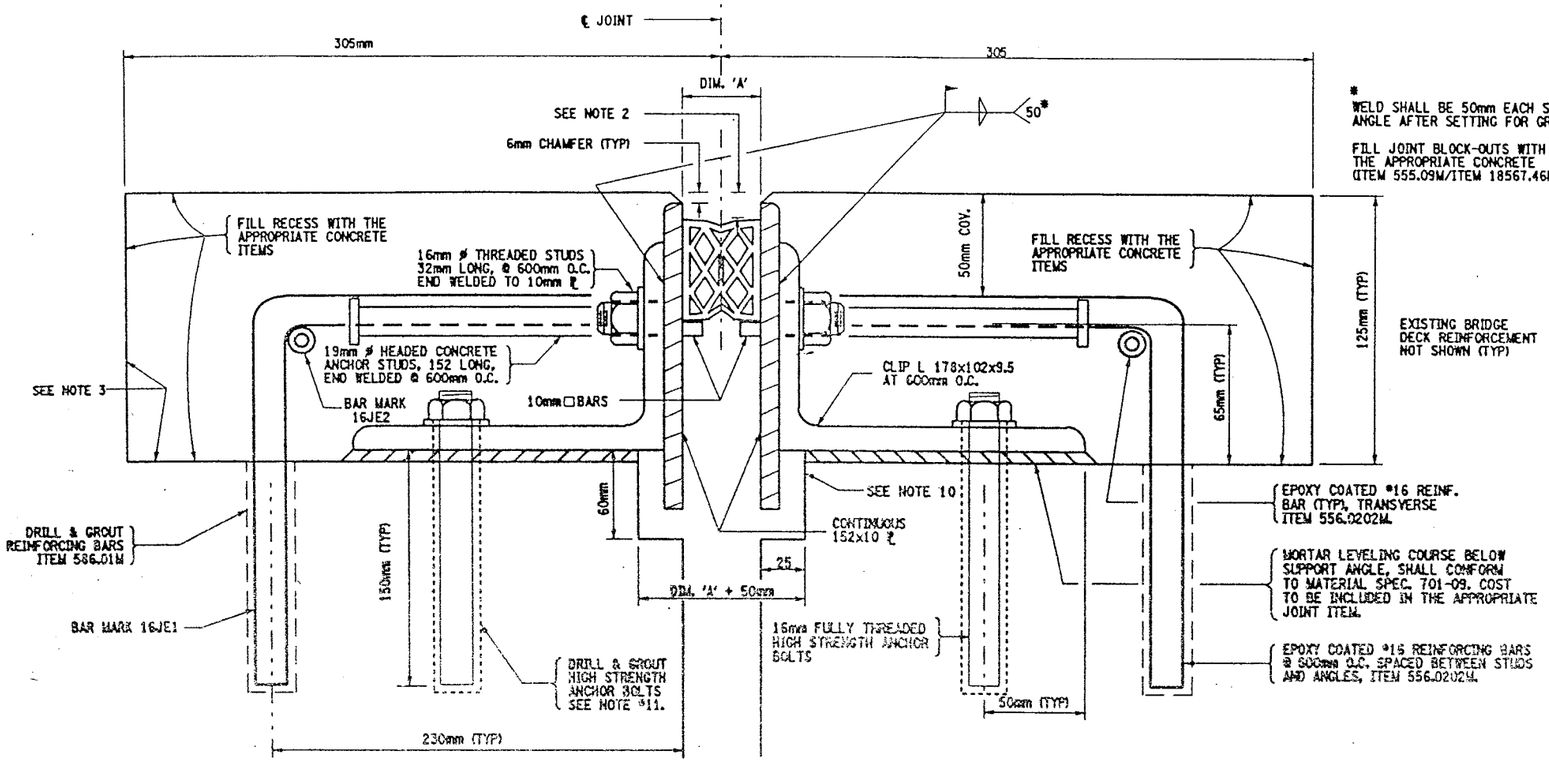

* WELD SHALL BE 50mm EACH SIDE OF ANGLE AFTER SETTING FOR GRADE

FILL JOINT BLOCK-OUTS WITH THE APPROPRIATE CONCRETE (ITEM 555.09M/ITEM 18567.46M)

MODIFIED ARMORED COMPRESSION JOINT DETAIL

FOR INSTALLATION LOCATIONS SEE JOINT TABLE

NOT TO SCALE

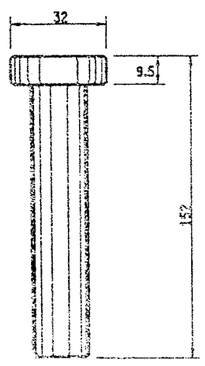

DETAIL OF HEADED CONCRETE ANCHOR STUD

NOT TO SCALE

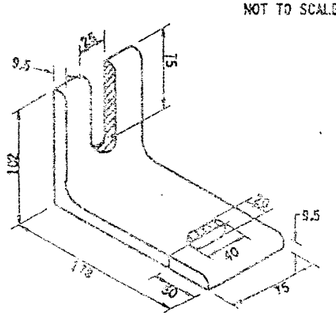

DETAIL OF CLIP ANGLE

NOT TO SCALE

NOTE:

ALL CUTTING TO BE DONE WITH A COPING SAW, SOAP AND WATER

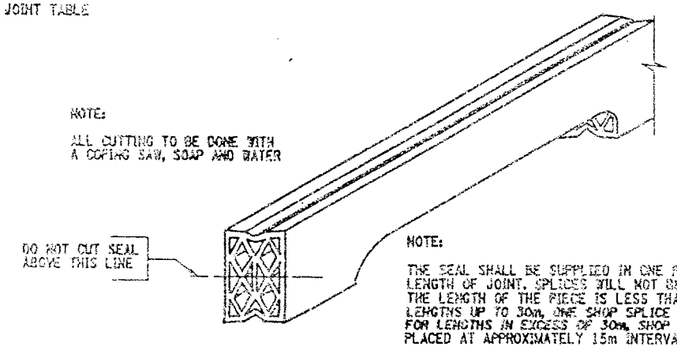

NOTE:

THE SEAL SHALL BE SUPPLIED IN ONE PIECE FOR THE FULL LENGTH OF JOINT. SPLICES WILL NOT BE PERMITTED WHEN THE LENGTH OF THE PIECE IS LESS THAN 15m. FOR LENGTHS UP TO 30m, ONE SHOP SPLICE WILL BE PERMITTED. FOR LENGTHS IN EXCESS OF 30m, SHOP SPLICES MAY BE PLACED AT APPROXIMATELY 15m INTERVALS.

DETAIL FOR CUTTING SEAL

NOT TO SCALE

GENERAL NOTES:

1. THE TEMPERATURE OF THE BRIDGE MUST BE TAKEN ON THE STRUCTURAL STEEL SURFACE TO DETERMINE THE TEMPERATURE CORRECTION FOR THE JOINT OPENINGS.
2. THIS DEPTH SHALL BE INDICATED ON THE SHOP DRAWINGS AND SHALL BE SUCH THAT WHEN THE SEAL IS COMPRESSED TO 50% OF ITS NORMAL WIDTH, THE TOP OF THE SEAL SHALL BE NOT LESS THAN 6mm NOR MORE THAN 19mm BELOW THE TOP OF THE ROADWAY.
3. RECESSES RECEIVING ITEM 555.09M. AFTER SURFACE PREPARATION, THOROUGHLY WET THE CONCRETE SURFACE AND ALL POROUS SURFACES TO BE IN CONTACT WITH NEW CONCRETE, FOR 12 HOURS. NOTE THE USE OF MATERIAL SPECIF. 705-22 PORTLAND CEMENT MORTAR BONDING GROUT HAS BEEN ELIMINATED, SEE INSERT IN PROJECT PROPOSAL.
4. A WATER-TIGHT INTEGRITY TEST SHALL BE PERFORMED BY THE CONTRACTOR AT ALL COMPRESSION SEAL JOINT INSTALLATIONS. THE FOLLOWING TEST PARAMETERS SHALL BE INCORPORATED IN THE TEST:
   1. A 15 MINUTE MINIMUM PERIOD OF STANDING WATER, WITH A 25mm MINIMUM DEPTH SHALL BE USED.
   2. IN ADDITION, IN LOCATIONS OF COPED AREAS OF THE SEAL, BENDS, ETC., WATER PRESSURE SHALL BE APPLIED, TO THE SATISFACTION OF THE EIC FOR A 15 MINUTE PERIOD.
   3. LIMITS OF TEST AREA SHALL BE FROM FACE OF CURB TO FACE OF CURB ON THE DECK SURFACE.
5. NO PAYMENT WILL BE MADE TO THE CONTRACTOR FOR THE JOINT IF, IN THE OPINION OF THE ENGINEER, THE INSTALLED JOINT LEAKS WITHIN THE 15 MINUTE TEST PERIOD.
6. PRIOR TO THE START OF WORK AT EACH JOINT, THE CONTRACTOR SHALL SUBMIT A WRITTEN PLAN FOR THE SPECIFICS OF THE TESTING, INCLUDING CONTAINMENT OF THE WATER AND THE METHOD TO BE USED FOR ACCESS BY THE E.I.C. TO THE BOTTOM OF THE JOINT BEING TESTED.
7. THE COST OF ALL LABOR, EQUIPMENT AND MATERIALS REQUIRED FOR THE TESTING WHICH INCLUDES, BUT IS NOT LIMITED TO:
   1. A CONTAINMENT SYSTEM FOR THE TEST WATER.
   2. PROVISIONS FOR E.I.C. ACCESS TO THE BOTTOM OF THE JOINT.

   SHALL BE INCLUDED IN THE PRICE BID FOR THE RESPECTIVE JOINT ITEMS.
8. THE COST OF ALL LABOR, EQUIPMENT, AND MATERIALS TO INSTALL THE NEW JOINT SHALL BE INCLUDED IN THE UNIT PRICE BID FOR THE APPROPRIATE JOINT ITEM.
9. MORTAR LEVELING COURSE SHALL CONFORM TO MATERIAL SPECIFICATION 701-09 AND SHALL BE INCLUDED IN THE PRICE BID FOR THE APPROPRIATE JOINT ITEM.
10. THE DIMENSIONS OF THE REMOVAL AREA UNDER THE 152x10 PLATES ARE SHOWN TO ALLOW SPACE FOR THE PLATES TO REST FREELY. IF THERE IS ALREADY ADEQUATE SPACE, NO CONCRETE REMOVAL OR REPLACEMENT IS REQUIRED IN THIS AREA.
11. 16 mm ø ASTM A325M ANCHOR BOLT TO BE DRILLED AND GROUTED IN PLACE IN ACCORDANCE WITH THE REQUIREMENTS OF SUB-SECTION 506-3.02. GROUTING MATERIALS SHALL BE IN ACCORDANCE WITH MATERIALS SUB-SECTION 701-07 ANCHORING MATERIALS-CHEMICALLY CURING. HOLES TO BE DRILLED TO THE DIAMETER AND DEPTH RECOMMENDED BY THE MANUFACTURER OF THE GROUTING MATERIAL (MIN. DEPTH OF 150 mm). THE COST OF THE ANCHORS, INCLUDING DRILLING AND GROUTING, SHALL BE INCLUDED IN THE UNIT PRICE BID FOR THE APPROPRIATE JOINT SYSTEM ITEM.
12. IT IS DESIRABLE TO HAVE THE ARMORED JOINT WITH ITS COMPRESSION SEAL ASSEMBLED IN THE SHOP AND DELIVERED TO THE JOB SITE ALL SET FOR INSTALLATION IN ITS PREFORMED RECESS IN THE STRUCTURAL SLAB. IN CASES WHERE THE ARMORED JOINT CANNOT BE ASSEMBLED IN THE SHOP, DUE TO ITS EXCESSIVE LENGTH CAUSING SHIPPING PROBLEMS, THE JOINT SHALL BE SEALED WITH THE COMPRESSION SEAL BEFORE THE STRUCTURE IS OPENED TO TRAFFIC INCLUDING CONSTRUCTION TRAFFIC, AND BEFORE DIS CONTINUING OPERATIONS WHEN WORK IS SUSPENDED DURING THE WINTER.

ALL DIMENSIONS ARE IN mm UNLESS OTHERWISE NOTED

EPOXY POLYSULFIDE GROUT NOTE:

CONTRACTOR MAY WITH THE APPROVAL OF THE ENGINEER USE MATERIAL SPECIFICATION 721-03 EPOXY POLYSULFIDE GROUT, AT THE RECESSES, INSTEAD OF THE 12 HOUR CONTINUOUS PREWETTING REQUIREMENTS (PROJECT PROPOSAL). CONTRACTOR MUST ENSURE PROPER CONSTRUCTION PRACTICES ARE FOLLOWED WHEN USING THIS GROUT. THE USE OF EPOXY POLYSULFIDE GROUT SHALL BE AT NO ADDITIONAL COST TO THE STATE.

SEALS (mm)			ARMORED JOINT SYSTEM	
TYPE	NOMINAL WIDTH	DIM. "A" @ 20°C.	TYPE	END CONDITION
1	44	25	A1	Fixed End Only
2	51	30	A2	Exp. up to 18 m
3	64	38	A3	Exp. over 18 m to 23 m
4	76	44	A4	Exp. over 23 m to 27 m
5	89	52	A5	Exp. over 27 m to 38 m
6	102	60	A6	Exp. over 38 m to 46 m

Maximum Skew Limits: Fixed End - No Limit
Exp. End - 45° A2 thru A6

LIST OF ITEMS USED:

ITEM 555.09M - STRUCT. CONCRETE, CLASS "HP" (CM)
ITEM 556.0202M - EPOXY COATED BAR REINF. FOR STRUCT. (kg)
ITEM 567.31M - MOD. ARMORED JOINT SYSTEM W/ COMP. SEAL TYPE A1 (m)
ITEM 567.32M - MOD. ARMORED JOINT SYSTEM W/ COMP. SEAL TYPE A2 (m)
ITEM 567.35M - MOD. ARMORED JOINT SYSTEM W/ COMP. SEAL TYPE A5 (m)
ITEM 567.36M - MOD. ARMORED JOINT SYSTEM W/ COMP. SEAL TYPE A6 (m)
ITEM 18567.46M - ELASTOMERIC CONC. FOR BRIDGE JT. SYSTEMS (m)
ITEM 586.01M - DRILL & GROUT REINF. BARS (mm)

AS BUILT REVISIONS

SIGNATURE DATE

INTERSTATE 481

COMPRESSION SEAL JOINT DETAILS

STATE OF NEW YORK
DEPARTMENT OF TRANSPORTATION

FILENAME	REGION	DATE	DRAWING NO.
305613AJ.JA1	3	10/02	JD-1

CHECKED BY ____ DRAFTED BY ____ ESTIMATED BY ____ CHECKED BY ____ DESIGNED BY ____ JOB MANAGER ____ DESIGN SUPERVISOR ____

FED ROAD REG. NO.	STATE	CONTRACT NO.	SHEET NO.	TOTAL SHEETS
1	N.Y.	D259214	417	432

BRIDGE REHABILITATION PROJECT (ELEMENT SPECIFIC)
VARIOUS BRIDGES ON INTERSTATE 481
TOWNS OF DEWITT AND CICERO
ONONDAGA COUNTY
P.I.N. 305613 | B.I.N. 1093571 & 1093572

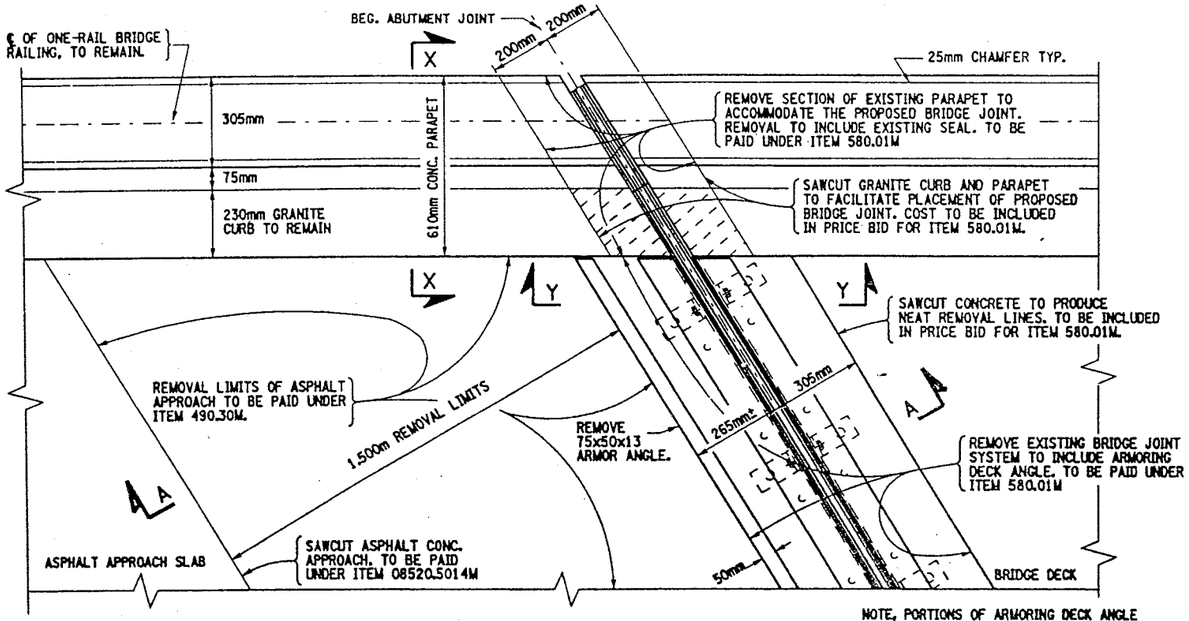

EXISTING BEG. ABUTMENT JOINT PLAN VIEW

BIN 1093571 - SOUTH ABUT.
BIN 1093572 - SOUTH ABUT.

NOT TO SCALE

NOTE, PORTIONS OF ARMORING DECK ANGLE AT BIN 1093572 NB SOUTH ABUT. HAS BEEN REMOVED BY STATE MAINT. FORCES.

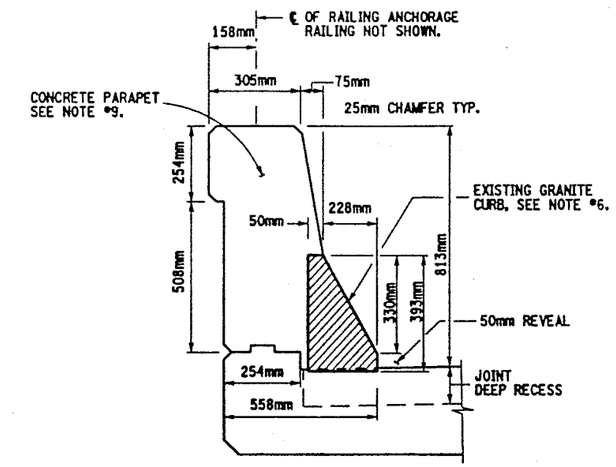

SECTION X-X
PARAPET CONCRETE REMOVAL DETAIL

NOT TO SCALE

NOTES:

1. REMOVAL OF ARMORING DECK ANGLE SHALL BE FROM CURB TO CURB.
2. FOR SECTION VIEWS SEE DWG. NO. JD-55 & JD-56.
3. FOR ADDITIONAL INFORMATION REFER TO DWG. NO. JT-3 & JT-4. ALSO SEE ORIGINAL CONTRACT NUMBER FISH 70-7 AND CONTRACT NUMBER D251436 FOR PREVIOUS WORK.
4. THE EXISTING BRIDGE JOINTS BUTT UP TO PARAPET. THE SEAL THRU THE PARAPET IS PLACED SEPARATE.
5. LEFT SIDE OF DECK SHOWN, RIGHT SIDE IDENTICAL.
6. SAW CUTTING OF CONCRETE AND GRANITE CURB SHALL BE INCLUDED IN PRICE BID FOR ITEM 580.01M.
7. REFER TO DWG. NO. JD-24 FOR ONE-CELL MODULAR JOINT SYSTEM DETAILS AND NOTES.
8. FILL RECESS AT PARAPET WITH CLASS "HP" CONCRETE RESTORE TO ORIGINAL DIMENSIONS.
9. REMOVAL DIMENSIONS AT PARAPETS MAY BE INCREASED TO EMCOMPASS ANY DETERIORATED CONCRETE ADJACENT TO THE JOINT BLOCK-OUT AREA, ADBE.
10. FOR SKEW ANGLES SEE NOTE *8, ON DWG. NO. JD-54.

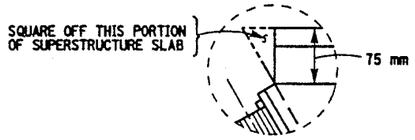

DETAIL "S"

NOT TO SCALE

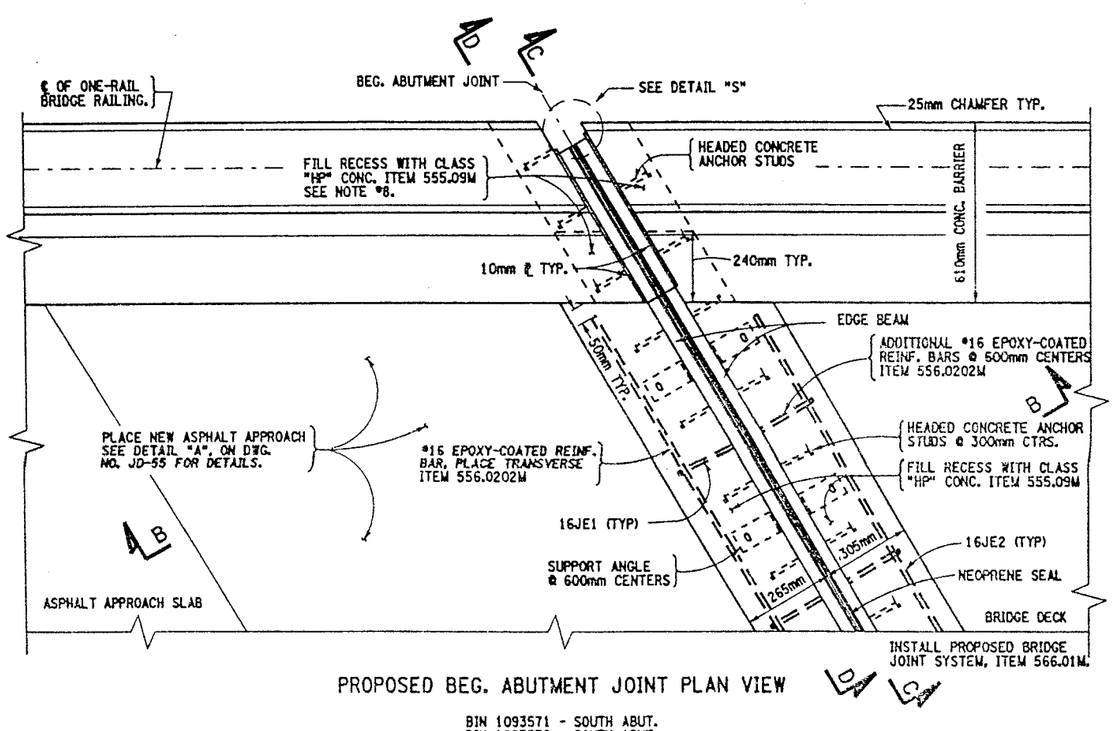

PROPOSED BEG. ABUTMENT JOINT PLAN VIEW

BIN 1093571 - SOUTH ABUT.
BIN 1093572 - SOUTH ABUT.

NOT TO SCALE

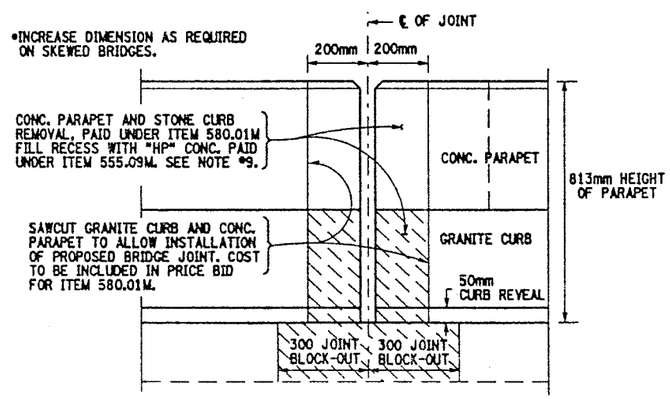

SECTION Y-Y
PARAPET CONCRETE REMOVAL DETAIL

NOT TO SCALE

WORK TO BE DONE:

BIN 1093571 SB

- REMOVE ARMORING DECK ANGLE AND REPLACE BRIDGE JOINT AT BEGINNING ABUTMENT.
- REPAIR CONC. HEADERS AT PIERS 1, 2 & 9.
- CLEAN DRAINAGE SYSTEM AT PIERS 1, 2, 3, 4, 5 & 9.
- REPLACE BRIDGE JOINTS AT PIERS 6, 7, 8, 10, 11, 12, 13 & 14.
- REMOVE ARMORING DECK ANGLE AT END ABUTMENT.

BIN 1093572 NB

- REMOVE ARMORING DECK ANGLE AND REPLACE BRIDGE JOINT AT BEGINNING ABUTMENT.
- REPAIR CONC. HEADERS AT PIERS 1 & 2.
- CLEAN DRAINAGE SYSTEM AT PIERS 1, 2, 3, 4 & 5.
- REPLACE BRIDGE JOINTS AT PIERS 6, 7, 8, 9, 10, 11, 12, 13, & 14.
- REMOVE ARMORING DECK ANGLE AT END ABUTMENT.

ITEMS USED:

ITEM 490.30M	- MISC. COLD MILLING OF BIT. CONC. (SM)
ITEM 08520.5014M	- SAWCUTTING BIT. CONC. (M)
ITEM 555.09M	- STRUCT. CONCRETE, CLASS "HP" (CM)
ITEM 556.0202M	- EPOXY-COATED BAR REINFORCEMENT FOR STRUCT. (Kg)
ITEM 566.01M	- MODULAR EXP. JOINT SYSTEM ONE-CELL (M)
ITEM 580.01M	- REMOVAL OF STRUCT. CONCRETE (CM)

ALL DIMENSIONS ARE IN mm UNLESS OTHERWISE NOTED

AS BUILT REVISIONS

SIGNATURE | DATE

INTERSTATE 481 SB & NB
OVER
CSX RAILROAD YARD
BRIDGE JOINT DETAILS

STATE OF NEW YORK
DEPARTMENT OF TRANSPORTATION

FILENAME	REGION	DATE	DRAWING NO.
305613AJJA1	3	10/02	JD-53

DESIGN SUPERVISOR ____ JOB MANAGER ____ DESIGNED BY ____ CHECKED BY ____ DRAFTED BY ____ CHECKED BY ____ ESTIMATED BY ____

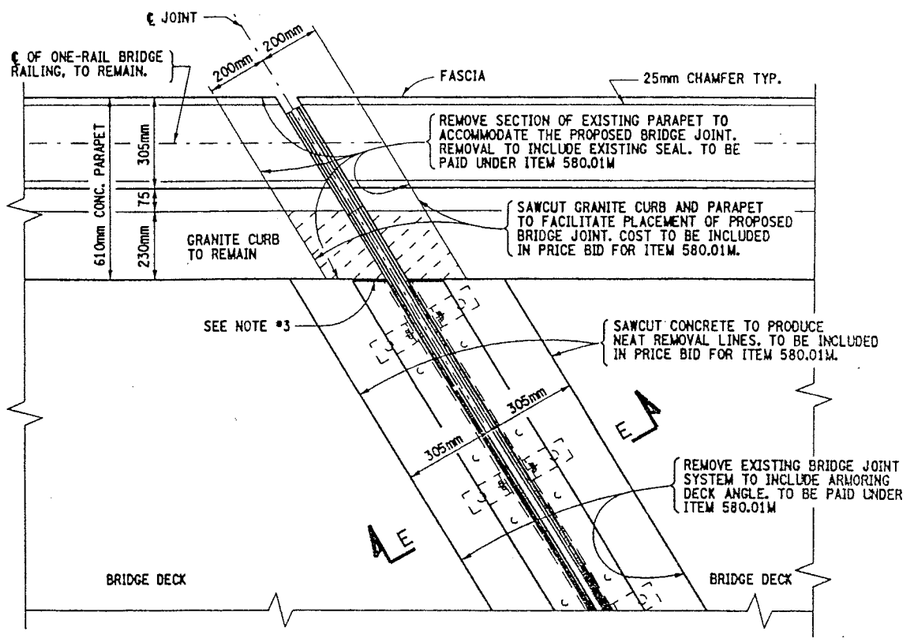

EXISTING PIER JOINT PLAN VIEW

BIN 1093571 - PIERS 6, 7, 8, 10, 11, 12, 13 & 14
BIN 1093572 - PIERS 6, 7, 8, 9, 10, 11, 12, 13 & 14

NOT TO SCALE

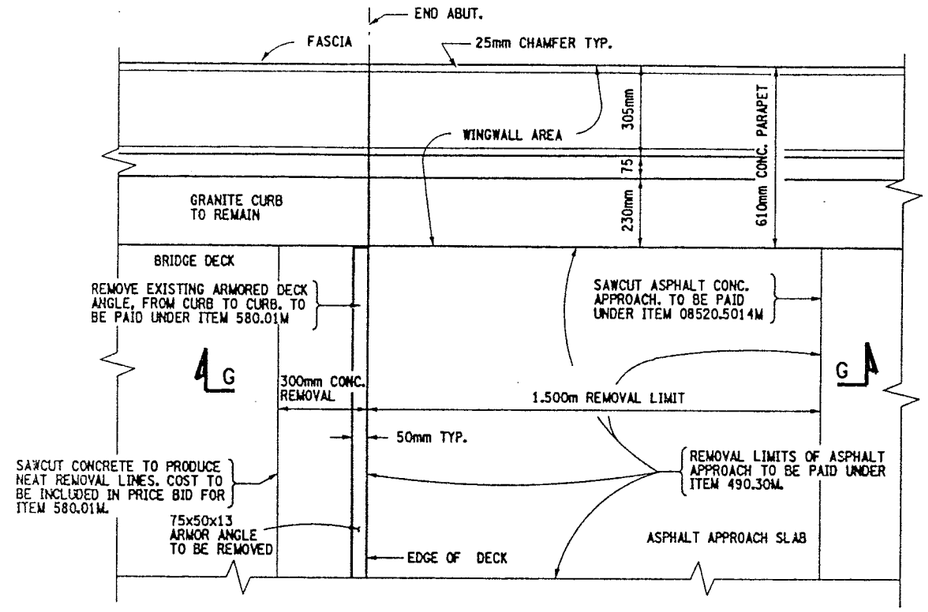

EXISTING END ABUTMENT PLAN VIEW

BIN 1093571 - NORTH ABUTMENT
BIN 1093572 - NORTH ABUTMENT

NOT TO SCALE

FED ROAD REG. NO.	STATE	CONTRACT NO.	SHEET NO.	TOTAL SHEETS
1	N.Y.	D259214	418	432

BRIDGE REHABILITATION PROJECT (ELEMENT SPECIFIC)
VARIOUS BRIDGES ON INTERSTATE 481
TOWNS OF DEWITT AND CICERO
ONONDAGA COUNTY
P.I.N. 305613 B.I.N. 1093571 & 1093572

NOTES:

1. FOR SECTION VIEWS SEE DWG. NO. JD-55 & JD-56.
2. FOR ADDITIONAL INFORMATION REFER TO DWG. NO. JT-3 & JT-4. ALSO SEE ORIGINAL CONTRACT NUMBER FISH 70-7 AND CONTRACT NUMBER D251436 FOR PREVIOUS WORK.
3. THE EXISTING JOINTS AND ARMORING DECK ANGLES BUTT UP TO PARAPET. THE SEAL THRU THE PARAPET IS PLACED SEPARATE.
4. LEFT SIDE OF DECK SHOWN, RIGHT SIDE IDENTICAL.
5. SAW CUTTING OF CONCRETE AND GRANITE CURB SHALL BE INCLUDED IN PRICE BID FOR ITEM 580.01M.
6. REFER TO DWG. NO. JD-24 FOR SINGLE CELL MODULAR JOINT DETAILS AND NOTES.
7. FILL RECESS AT PARAPET WITH CLASS "HP" CONCRETE RESTORE TO ORIGINAL DIMENSIONS.
8. BOTH STRUCTURES HAVE THE FOLLOWING SKEW ANGLES:

   BEGINNING ABUTMENT THROUGH PIER #9 HAVE A SKEW ANGLE OF 8°-43'-42". PIER #10 THROUGH END ABUTMENT HAVE A SKEW ANGLE OF 0°-0'-0".
9. THE INSTALLATION OF NEW JOINT SEALER MATERIAL AT END ABUTMENT PARAPETS SHALL MEET STANDARD SPECIF. 705-06. THE AREA SHALL BE CLEANED PRIOR TO PLACEMENT. TO THE SATISFACTION OF THE ENGINEER. COSTS TO BE INCLUDED IN PRICE BID FOR ITEM 555.09M.

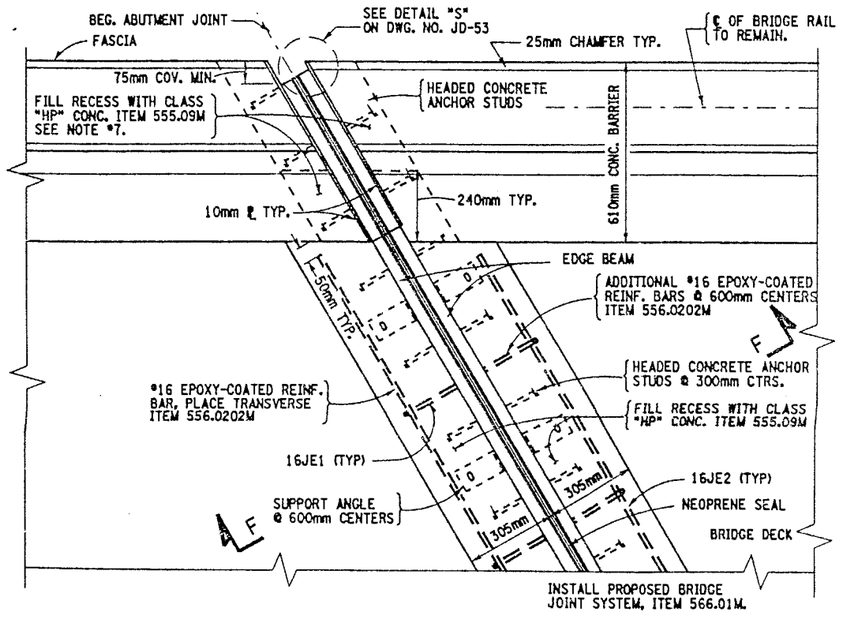

PROPOSED PIER JOINT PLAN VIEW

BIN 1093571 - PIERS 6, 7, 8, 10, 11, 12, 13 & 14
BIN 1093572 - PIERS 6, 7, 8, 9, 10, 11, 12, 13 & 14

NOT TO SCALE

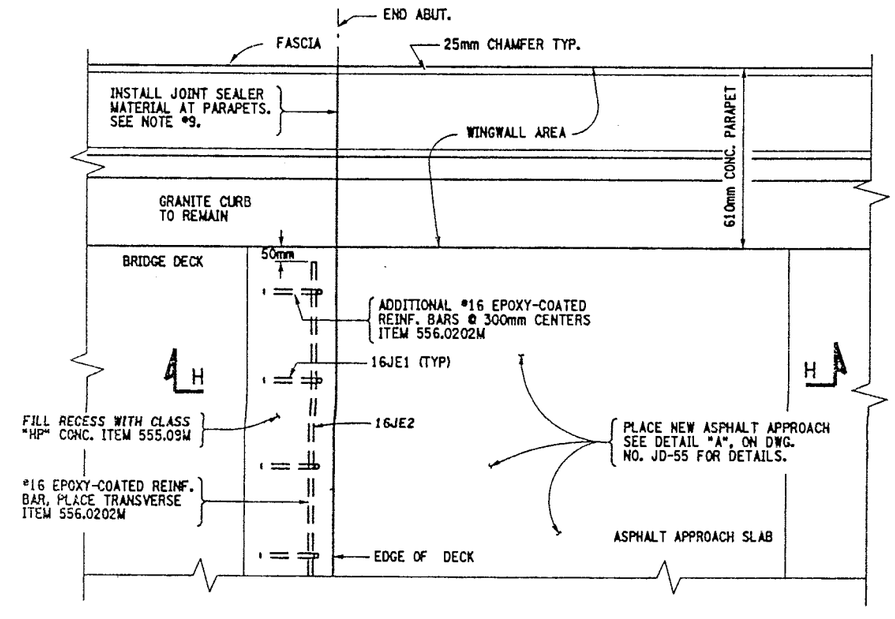

PROPOSED END ABUTMENT PLAN VIEW

BIN 1093571 - NORTH ABUTMENT
BIN 1093572 - NORTH ABUTMENT

NOT TO SCALE

ITEMS USED:

ITEM 490.30M	- MISC. COLD MILLING OF BIT. CONC. (SM)
ITEM 08520.5014M	- SAWCUTTING BIT. CONC. (M)
ITEM 555.09M	- STRUCT. CONCRETE, CLASS "HP" (CM)
ITEM 556.0202M	- EPOXY-COATED BAR REINFORCEMENT FOR STRUCT. (Kg)
ITEM 566.01M	- MODULAR EXP. JOINT SYSTEM ONE-CELL (M)
ITEM 580.01M	- REMOVAL OF STRUCT. CONCRETE (CM)

ALL DIMENSIONS ARE IN mm UNLESS OTHERWISE NOTED

AS BUILT REVISIONS

SIGNATURE DATE

INTERSTATE 481 NB & SB
OVER
CSX RAILROAD YARD

BRIDGE JOINT DETAILS

STATE OF NEW YORK
DEPARTMENT OF TRANSPORTATION

FILENAME	REGION	DATE	DRAWING NO.
305613AJJA1	3	10/02	JD-54

DESIGN SUPERVISOR ____ JOB MANAGER ____ DESIGNED BY ____ ESTIMATED BY ____ DRAFTED BY ____ CHECKED BY ____ CHECKED BY ____

FED ROAD REG. NO.	STATE	CONTRACT NO.	SHEET NO.	TOTAL SHEETS
1	N.Y.	D259214	419	432

BRIDGE REHABILITATION PROJECT (ELEMENT SPECIFIC)
VARIOUS BRIDGES ON INTERSTATE 481
TOWNS OF DEWITT AND CICERO
ONONDAGA COUNTY
P.I.N. 305613 — B.I.N. 1093571 & 1093572

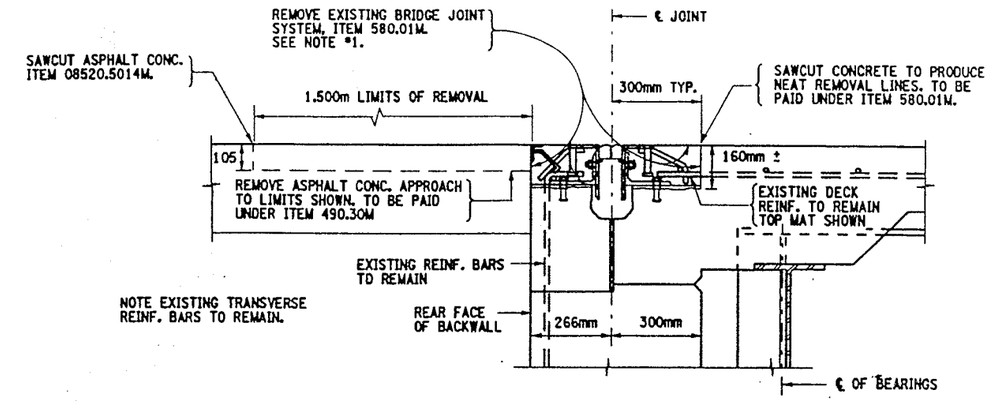

SECTION A-A
EXISTING BEGINNING ABUTMENT JOINT
BIN 1093571 - SOUTH ABUT.
BIN 1093572 - SOUTH ABUT.
NOT TO SCALE

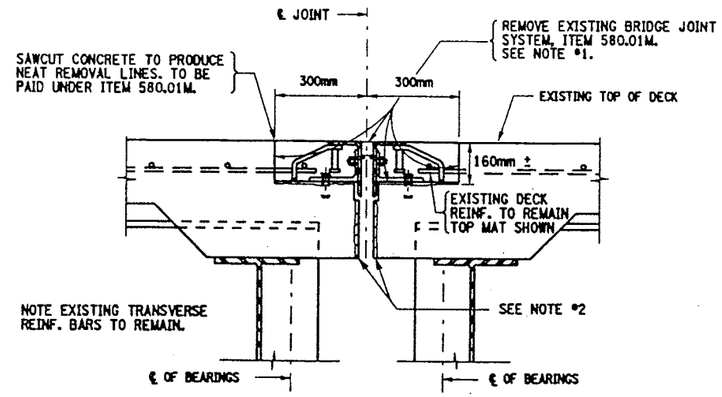

SECTION E-E
EXISTING PIER JOINT TYPICAL
BIN 1093571 - PIERS 6, 7, 8, 10, 11, 12, 13 & 14
BIN 1093572 - PIERS 6, 7, 8, 9, 10, 11, 12, 13 & 14
NOT TO SCALE

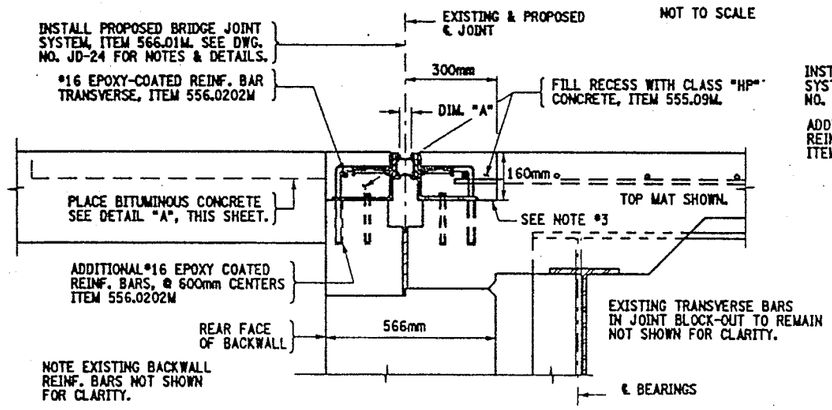

SECTION B-B
PROPOSED BEGINNING ABUTMENT JOINT
BIN 1093571 - SOUTH ABUT.
BIN 1093572 - SOUTH ABUT.
NOT TO SCALE

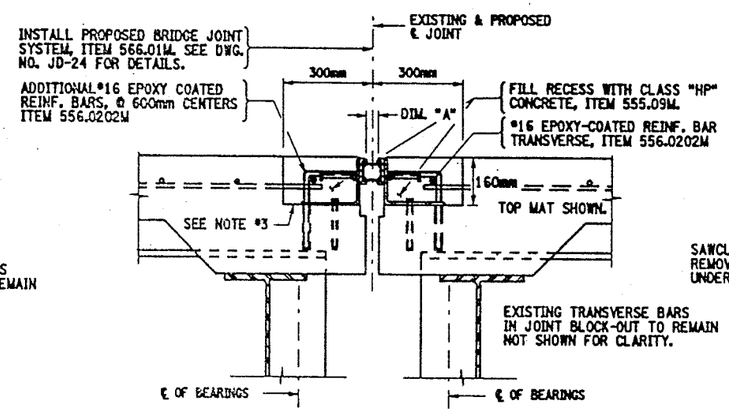

SECTION F-F
PROPOSED PIER JOINT TYPICAL
BIN 1093571 - PIERS 6, 7, 8, 10, 11, 12, 13 & 14
BIN 1093572 - PIERS 6, 7, 8, 9, 10, 11, 12, 13 & 14
NOT TO SCALE

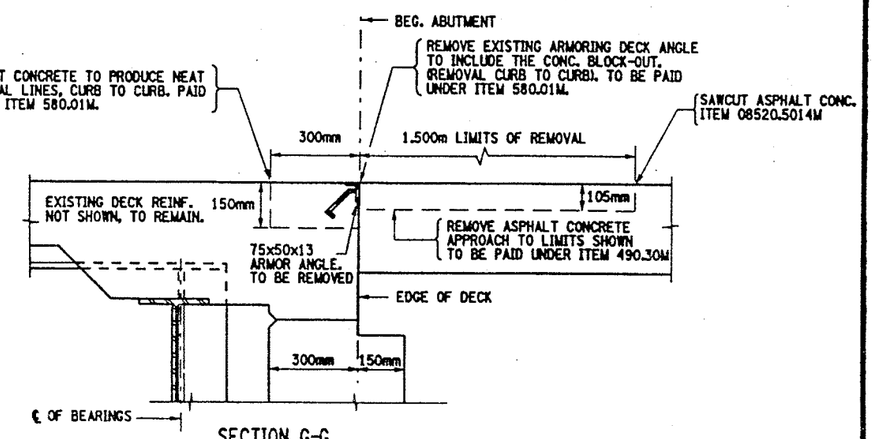

SECTION G-G
EXISTING BEG. ABUTMENT JOINT
BIN 1093571 - NORTH ABUTMENT
BIN 1093572 - NORTH ABUTMENT
NOT TO SCALE

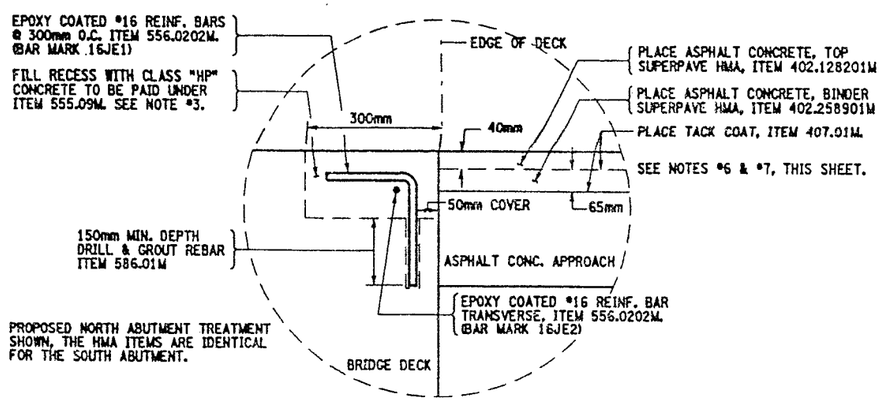

DETAIL "A"
NOT TO SCALE

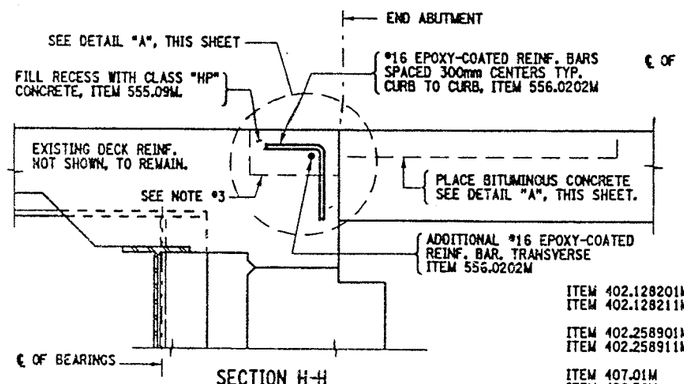

SECTION H-H
PROPOSED END ABUTMENT JOINT
BIN 1093571 - NORTH ABUTMENT
BIN 1093572 - NORTH ABUTMENT
NOT TO SCALE

NOTES:

1. REMOVAL OF THE EXISTING BRIDGE JOINT SYSTEM TO LIMITS SHOWN OR AS DIRECTED BY ENGINEER. REMOVAL SHALL INCLUDE ANY ARMORING DECK ANGLE AND ANY ADDITIONAL REBAR WHICH IS WELDED TO THE SEGMENT ANGLE AND THE ORIGINAL REINFORCEMENT. COST TO BE INCLUDED IN PRICE BID FOR ITEM 580.01M.
2. REMOVAL OF A PORTION OF THE BRIDGE DECK MAY BE NECESSARY TO ALLOW FOR EXPANSION OF BRIDGE, AOBE. SEE SECTION VIEW ON DWG. NO. JD-24. COST TO BE INCLUDED IN PRICE BID FOR ITEM 580.01M.
3. RECESSES RECEIVING ITEM 555.09M, AFTER SURFACE PREPARATION, THOROUGHLY WET THE CONCRETE SURFACES AND ALL POROUS SURFACES TO BE IN CONTACT WITH NEW CONCRETE FOR 12 HOURS. NOTE, THE USE OF MATERIAL SPECIF. T05-22 PORTLAND CEMENT MORTAR BONDING GROUT HAS BEEN ELIMINATED, (PROJECT PROPOSAL).
4. ACTUAL BRIDGE JOINT BLOCK-OUT DIMENSIONS MAY VARY. REMOVAL LIMITS SHALL BE TO EXISTING BLOCK-OUT LOCATIONS, OR AS DIRECTED BY THE ENGINEER.
5. PROPOSED PARTIAL PLAN VIEWS, SEE DWG. NO. JD-53 & JD-54.
6. ALL SURFACES OF HMA SHALL BE CLEANED AND TACK-COATED PRIOR TO HMA PLACEMENT. ALL COSTS SHALL BE INCLUDED IN THE UNIT PRICE BID FOR ITEM 407.01M.
7. ANY USE OF SUPERPAVE HMA ITEMS SHALL INCLUDE THE APPROPRIATE PLANT PRODUCTION QUALITY ADJUSTMENT ITEMS.

ITEMS USED:

ITEM 402.128201M	- SUPERPAVE HMA F2, 12.5mm (MT)
ITEM 402.128211M	- PLANT PRODUCTION QUALITY ADJUSTMENT TO 402.128201M (QU)
ITEM 402.258901M	- SUPERPAVE HMA F9, 25.0mm (MT)
ITEM 402.258911M	- PLANT PRODUCTION QUALITY ADJUSTMENT TO 402.258901M (QU)
ITEM 407.01M	- TACK COAT (L)
ITEM 490.30M	- MISC. COLD MILL OF BITUMINOUS CONC. (SM)
ITEM 08520.5014M	- SAWCUTTING BIT. CONC. (M)
ITEM 555.09M	- STRUCT. CONCRETE, CLASS "HP" (CM)
ITEM 556.0202M	- EPOXY-COATED BAR REINF. FOR STRUCT. (KG)
ITEM 566.01M	- MOD. EXP. JOINT SYSTEM ONE-CELL (M)
ITEM 580.01M	- REMOVAL OF STRUCT. CONCRETE (CM)
ITEM 586.01M	- DRILL & GROUT REINF. BARS (MM)

ALL DIMENSIONS ARE IN mm UNLESS OTHERWISE NOTED

AS BUILT REVISIONS

SIGNATURE — DATE

INTERSTATE 481 NB & SB
OVER
CSX RAILROAD YARD
BRIDGE JOINT DETAILS

STATE OF NEW YORK
DEPARTMENT OF TRANSPORTATION

FILENAME	REGION	DATE	DRAWING NO.
305613AJJA1	3	10/02	JD-55

CHECKED BY
DRAFTED BY
ESTIMATED BY
CHECKED BY
DESIGNED BY
JOB MANAGER
DESIGN SUPERVISOR

FED ROAD REG. NO.	STATE	CONTRACT NO.	SHEET NO.	TOTAL SHEETS
1	N.Y.	D259214	420	432

BRIDGE REHABILITATION PROJECT (ELEMENT SPECIFIC)
VARIOUS BRIDGES ON INTERSTATE 481
TOWNS OF DEWITT AND CICERO
ONONDAGA COUNTY
P.I.N. 305613 B.I.N. 1093571 & 1093572

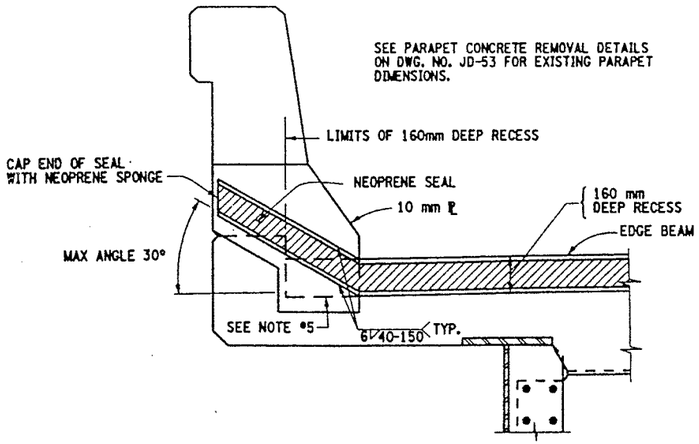

PROPOSED SEAL PLACEMENT TYPICAL SECTION C-C (CONCRETE TRAFFIC BARRIER)

NOT TO SCALE

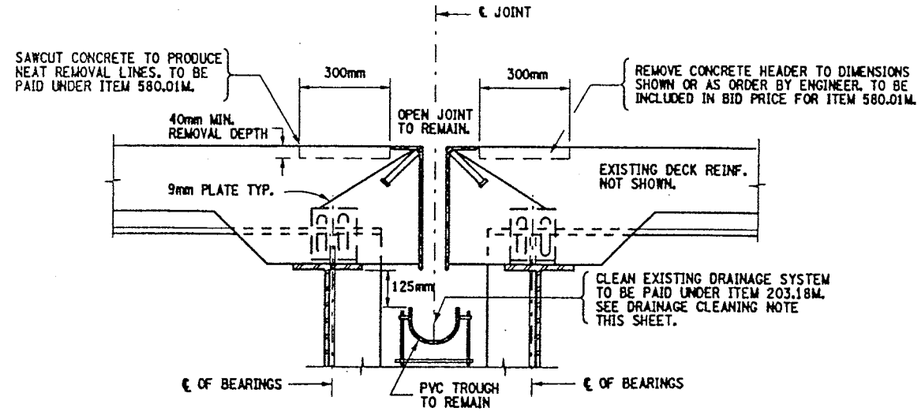

EXISTING OPEN JOINT AT PIERS
(REPAIRS TO OPEN JOINT HEADERS)

BIN 1093571 - PIERS 1, 2, & 9
BIN 1093572 - PIERS 1 & 2

NOT TO SCALE

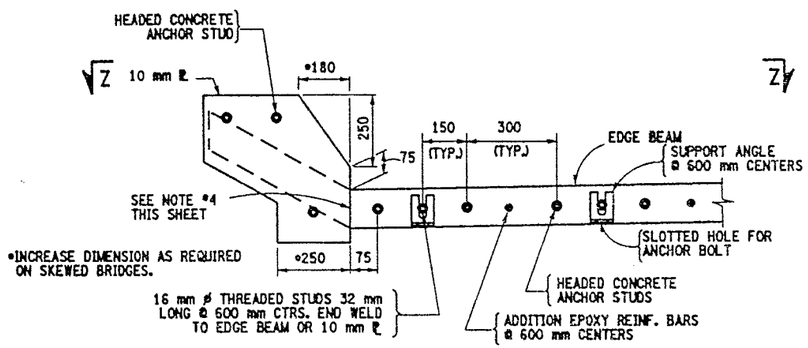

PROPOSED STEEL PLATE TYPICAL SECTION D-D (CONCRETE TRAFFIC BARRIER)

(ONLY THE STEEL SHOWN)

NOT TO SCALE

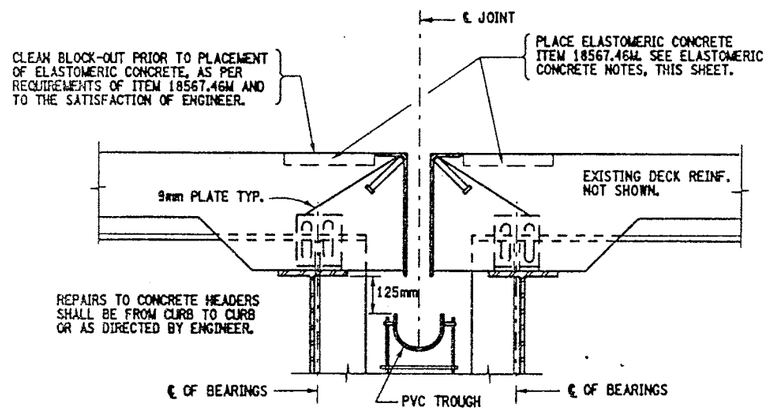

PROPOSED OPEN JOINT AT PIERS
(REPAIRS TO OPEN JOINT HEADERS)

BIN 1093571 - PIERS 1, 2, & 9
BIN 1093572 - PIERS 1 & 2

NOT TO SCALE

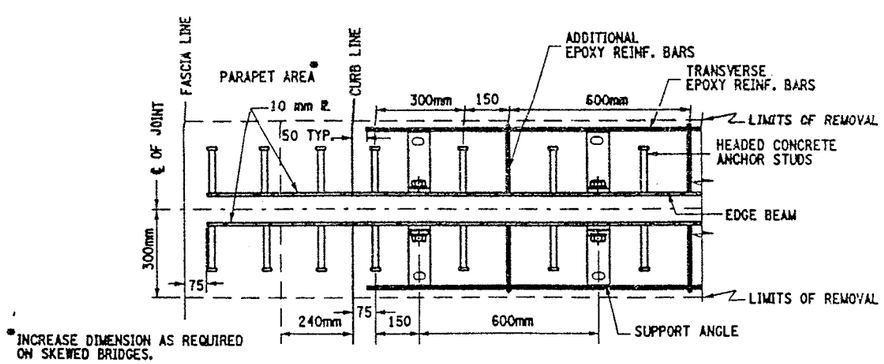

PLAN VIEW OF STEEL ℞ SECTION Z-Z
TYPICAL SPACING FOR SINGLE CELL

NOT TO SCALE

NOTES:

1. ALL NOTES & DETAILS ON DWG. NO. JD-24 SHALL APPLY.
2. REFER TO DWG. NO. JD-53 & JD-54 FOR PROPOSED PARTIAL PLAN VIEWS.
3. FOR CALCULATION OF "J" DIMENSION REFER TO DWG. NO. JD-24.
4. ALL WELDS SHALL BE GROUND SMOOTH TO THE SATISFACTION OF THE ENGINEER, ON SEAL CONTACT SIDE OF EDGE BEAM.
5. RECESSES RECEIVING ITEM 555.09M, AFTER SURFACE PREPARATION, THOROUGHLY WET THE CONCRETE SURFACES AND ALL POROUS SURFACES TO BE IN CONTACT WITH NEW CONCRETE FOR 12 HOURS. NOTE, THE USE OF MATERIAL SPECIF. 705-22 PORTLAND CEMENT MORTAR BONDING GROUT HAS BEEN ELIMINATED. (PROJECT PROPOSAL).

CLEAN DRAINAGE SYSTEM NOTE:

THE FOLLOWING CLOSED DRAINAGE SYSTEMS SHALL BE CLEANED UNDER THIS CONTRACT.

BIN 1093571 - PIERS 1, 2, 3, 4, 5, & 9
BIN 1093572 - PIERS 1, 2, 3, 4, 5 & 6

NOTE, AT PIER #6 THE TYPE OF BRIDGE JOINT IS AN ARMORED JOINT WITH COMPRESSION SEAL. THE DOWNSPOUTS ARE CONNECTED TO THE BRIDGE SCUPPERS.

THE CLEANING OF THE EXISTING DRAINAGE SYSTEM (ITEM 203.18M) SHALL BE FROM HOPPER (FASCIA GIRDER) TO HOPPER (FASCIA GIRDER) AND SHALL INCLUDE THE PVC TROUGH AND THE ENTIRE DOWNSPOUT SYSTEM (DIA. OF DOWNSPOUTS VARY) FROM HOPPERS TO OUTLET. REFER TO DWG. NO. DD17-1 THRU DWG. NO. DD17-4 FOR DRAINAGE DETAILS AND PROPOSED MODIFICATIONS TO PIER DOWNSPOUTS.

FOR ESTIMATING THE QUANTITY FOR ITEM 203.18M. THE FOLLOWING INFORMATION IS ASSUMED:

BIN 1093571 - PIERS 1, 2, 3, 4, 5, & 9
(256 METERS TOTAL)

BIN 1093572 - PIERS 1, 2, 3, 4,5 & 6
(269 METERS TOTAL)

CONTRACTOR SHALL TAKE CARE WHEN PERFORMING CLEANING OPERATION NOT TO DAMAGE THE EXISTING DRAINAGE SYSTEM. ANY DAMAGE CAUSED BY CONTRACTOR'S OPERATIONS SHALL BE REPAIRED OR REPLACED AS DEEMED NECESSARY BY THE ENGINEER AT NO ADDITIONAL COST TO THE STATE.

ELASTOMERIC CONCRETE NOTE:

1. AN EXPERIENCED TECHNICAL REPRESENTATIVE EMPLOYED BY THE MANUFACTURER OF THE ELASTOMERIC CONCRETE SHALL BE PRESENT DURING ALL PHASES OF SUBSTRATE PREPARATION AND MATERIAL PLACEMENT.
2. THE WATERTIGHT INTEGRITY TEST SHALL NOT BE REQUIRED FOR THE OPEN JOINT HEADER REPAIRS, WHERE ELASTOMERIC CONCRETE (ITEM 18567.46M) IS USED, FOR THESE TWO STRUCTURES ONLY.
3. THE REMOVAL DIMENSIONS MAY BE ADJUSTED TO ENSURE THAT ALL DETERIORATED CONCRETE ADJACENT TO THE JOINT AREA IS ENCOMPASS, MORE.

ALL DIMENSIONS ARE IN mm UNLESS OTHERWISE NOTED

ITEMS USED:

ITEM 203.18M - CLEAN CLOSED DRAINAGE SYSTEMS (M)
ITEM 18567.46M - ELASTOMERIC CONCRETE FOR BRIDGE JOINT SYSTEMS (M)
ITEM 580.01M - REMOVAL OF STRUCT. CONCRETE (CM)

AS BUILT REVISIONS

SIGNATURE DATE

INTERSTATE 481 NB & SB
OVER
CSX RAILROAD YARD

BRIDGE JOINT DETAILS

STATE OF NEW YORK
DEPARTMENT OF TRANSPORTATION

FILENAME	REGION	DATE	DRAWING NO.
305613AJJA1	3	10/02	JD-56

DESIGN SUPERVISOR ___ JOB MANAGER ___ DESIGNED BY ___ CHECKED BY ___ DRAFTED BY ___ ESTIMATED BY ___ CHECKED BY ___

Asbestos Sampling Survey

Location:

BIN 1-09357-1
Interstate Route 481 South Bound over Conrail

Prepared for:

New York State
Department of Transportation

PIN 3804.00.101

LaBella Project No. 97132

May, 1998

Table of Contents

		Page
I.	Project Summary	1
II.	Site Description	1
III.	Inspection Procedures	1
IV.	Results	2
Certification		2

Figures and Table

I. Project Summary

In accordance with conditions of Term Agreement D010010, LaBella Associates, P.C. conducted an asbestos sampling survey of the Interstate Route 481 South Bound Bridge over Conrail. Based on laboratory analyses of bulk samples collected, the following materials were determined to contain asbestos:

BIN 1-09357-1 Interstate Route 481 South Bound over Conrail

Type of Material	Estimated Amount
Sheet Packing	7 Square Meters
Caulking Compound	37.4 Linear Meters

II. Site Description

The Site is located in Onondaga County, New York. For the purpose of this report, the Site consists of the Interstate Route 481 South Bound Bridge over Conrail (See attached FIGURE 1 - Site Location Map).

III. Inspection Procedures

The following procedures were used to obtain the data for this Report:

A. A review of record drawings supplied by Region 3 personnel and a visual inspection of the subject structure were conducted to identify potential visible/accessible sources of asbestos-containing materials. Observations and notes were made to provide a description of the structure, and an estimate of the approximate amount, length, or area of ACM present.

B. Physical or operational constraints which might affect the removal of the ACM were identified and reported.

C. Bulk samples of suspected ACM were collected during the site inspection of the subject structure. Samples were taken from each homogeneous area that may contain ACM.

D. Samples were submitted for analysis. Preliminary PLM analyses of NOB materials were performed by LaBella Laboratories, a NYSDOH approved laboratory, to determine the presence and percentage of asbestos in each sample. TEM analyses of NOB materials, if necessary, were performed by EMSL Analytical, Inc. or New York Testing Laboratories, Inc.

E. Lab results were used to determine the approximate location, type, and amount of the verified ACM.

F. A drawing of the structure at the Site was created, in order to show sample locations and the approximate locations and amounts of confirmed ACM observed in accessible locations.

Only accessible areas were inspected. Inaccessible areas, such as areas within the bridge or the approaches to the bridge were not included in this inspection. No investigation was conducted by LaBella Associates to determine the presence of underground utilities on or in the immediate vicinity of the Site. Actual sample locations are shown in the attached FIGURE 2. Results of bulk sample analyses are tabulated in the attached TABLE.

IV. Results

BIN 1-09357-1 Interstate Route 481 South Bound over Conrail

Sheet Packing

Asbestos-containing sheet packing is located between the tops of the abutments and the deck slab at both ends of the bridge. Most of this material is presently covered by the bridge deck, although the edges of this sheet packing are exposed and visible at various locations.

It is estimated that the total amount of this asbestos-containing sheet packing material on the bridge is approximately 7 square meters. This estimate is based on field measurements taken at the time of the site visit.

The approximate locations of this asbestos-containing sheet packing are shown in FIGURE 2.

Caulking Compound

Asbestos-containing caulking compound is located around some of the guide rail base plates on both parapets on the bridge. It is estimated that the total amount of this caulking compound is approximately 37.4 linear meters. This estimate is based on field measurements taken at the time of the site visit.

The approximate locations of this material are shown in the attached FIGURE 2. Analytical results of bulk samples collected are summarized in the attached TABLE.

Certification

LaBella Associates, P.C. certifies the accuracy of this report, to the best of our knowledge, based on the information collected as described in the Inspection Procedures Section of this investigation.

Figures & Table

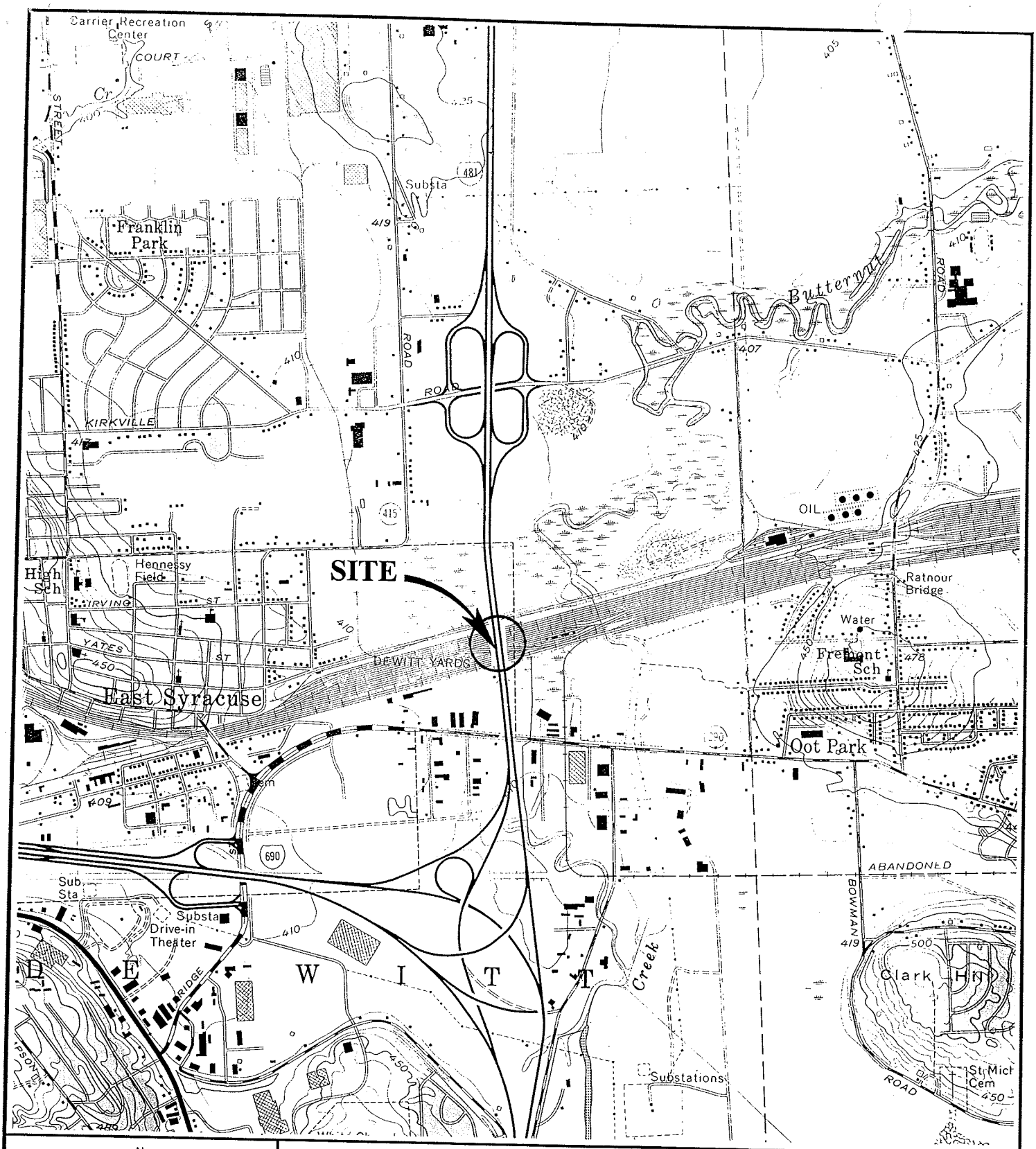

N

SCALE: 1" = 2000'

FIGURE 1
Site Location Map

I-481 SOUTH BOUND OVER CONRAIL

BIN 1-09357-1

LABELLA

PROJECT NO. 97132

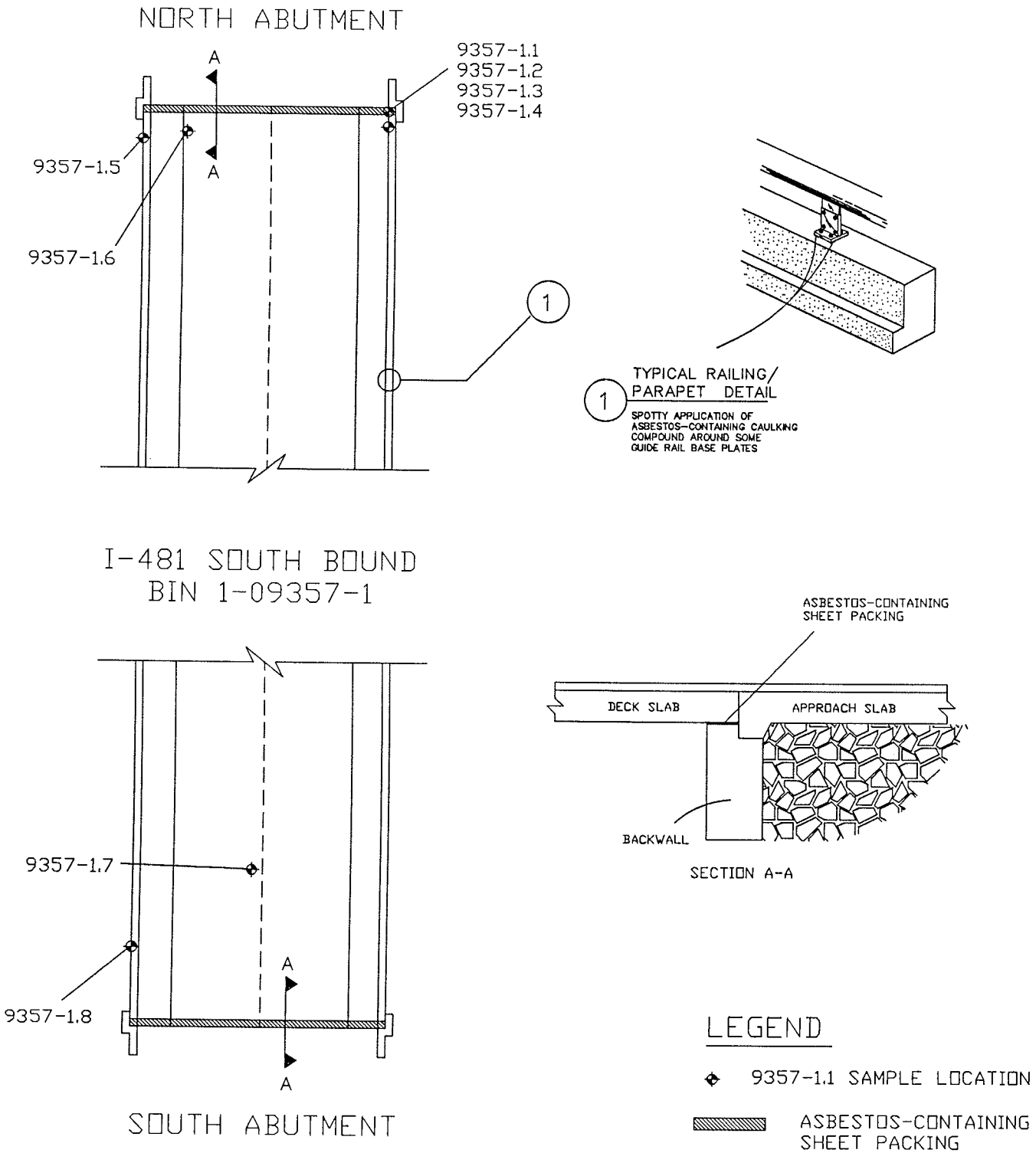

NORTH	PROJECT TITLE: ASBESTOS SAMPLING SURVEY 16 BRIDGES, ONONDAGA COUNTY, NEW YORK	PROJECT NO. 97132
		PIN 3804.00.101
	FIGURE 2: I-481 SOUTH BOUND OVER CONRAIL BIN 1-09357-1 SAMPLE LOCATIONS AND CONFIRMED ACM	NOT TO SCALE
		DATE: MAY, 1998

Bulk Sample Results Table

Asbestos Sampling Survey
BIN 1-09357-1
Interstate Route 481 South Bound over Conrail
Onondaga County, New York
LaBella Project # 97132
PIN 3804.00.101

Sample #	Sample Location	Type of Material	Results % Asbestos	Amount of Material	Specification Item No.
9357-1.1	**North End of Bridge Between Deck & Abutment**	**Sheet Packing**	**40 % Chrysotile**	**7 Square Meters**	**15202.0627 (M)**
9357-1.2	North End of Bridge Between Deck & Wing Wall	Joint Filler	None Detected	N/A	N/A
9357-1.3	North End of Bridge Beneath Bearing	Bearing Pad	None Detected	N/A	N/A
9357-1.4	North End of Bridge on Abutment	Masonry Coating	None Detected	N/A	N/A
9357-1.5	North End of Bridge, on West I-Beam	Green Paint	None Detected	N/A	N/A
9357-1.6	North End of Bridge, on Inside I-Beam	Green Paint	None Detected	N/A	N/A
9357-1.7	South End of Bridge, on Ground Under 2nd Span	Green Paint	None Detected	N/A	N/A
9357-1.8	**South End of Bridge, at Base of Guide Rail**	**Gray Caulk**	**4 % Chrysotile**	**37.4 Linear Meters**	**15202.0629 (M)**

Watts
Architects
&Engineers

BIN 1093572

I-81 (Former I-481) NB over Conrail Railroad

BIN 1093572

Location: I-481 NB over CSX Railroad Yard

NYSDOT D031085 PIN 3501.60 - I-81 Viaduct Replacement or New Urban Arterial

City of Syracuse, Onondaga County

Bridge Asbestos Assessment Results

Asbestos containing materials have been identified on this bridge.

ITEM	DESCRIPTION	QUANTITY
210.481201	Removal and Disposal of Miscellaneous ACM (BV14) – Sheet Packing	76 SQ FT
210.3413	Removal and Disposal of Caulking ACM (BV14) – (Found around the guiderail base plates. Material was to have been removed during the 2002 rehabilitation project. Remaining quantity is unknown.)	LUMP SUM
210.481202	Removal and Disposal of Miscellaneous ACM (BV14) – Bituminous Joint Filler (Assumed to be ACM based on record plan review.)	47 SQ FT

The following summarizes the results of the most recent asbestos survey and record plan review.

Watts Inspection Findings (February/March 2014)

A bridge inspection was completed on 2/10/2014 and 3/19/2014 and the following suspect ACMs were identified and sampled:

- Bearing pad
- Sheet packing
- Green bridge paint
- Off-while/Grey masonry paint
- Vinyl drain pipe
- Beige paint on deck sidewalls

Laboratory analysis indicated that the sheet packing sampled by Watts was confirmed positive for asbestos. The other listed materials were not positive for asbestos, per laboratory analytical results. Watts inspected the guiderail base plates but could not find any guiderail base plate caulk during our inspection. The Design Builder should be aware and revisit the associated location(s) during the work.

Review of Historic Plans and Previous Asbestos Survey Information

- The record plans (FISH 70-7, D251438, D259214) were reviewed in support of the field survey. The following suspect ACMs were identified:
    - Compressed asbestos sheet packing
    - Bituminous joint filler
    - Caulking compound (Indicates that this material [150 linear feet] is to be removed based on the reviewed rehabilitation plans dated 2002. Small amounts may still remain under some railing base plates).

- A previous asbestos survey competed by LaBella in 1998 was reviewed in support of this project.
    - Bridge paint
    - Compressed asbestos sheet packing
    - Caulking compound (Guide rail base plates)
    - Joint filler
    - Masonry coating
    - Bearing pad

  Laboratory analysis indicated that the sheet packing and guiderail caulk was confirmed positive for asbestos.

Watts Architecture & Engineering

BRIDGE ASBESTOS FIELD INSPECTION FORM

BIN Number/Location: 1093572 481 NB over RR Yard

Inspection Date: 3-19-14 2-10-14

Project Name: : I-81 Viaduct Replacement or New Urban Arterial

PIN Number: PIN: 3501.60, D031085

Inspector(s): S. Matthews

Watts Project No: 13092

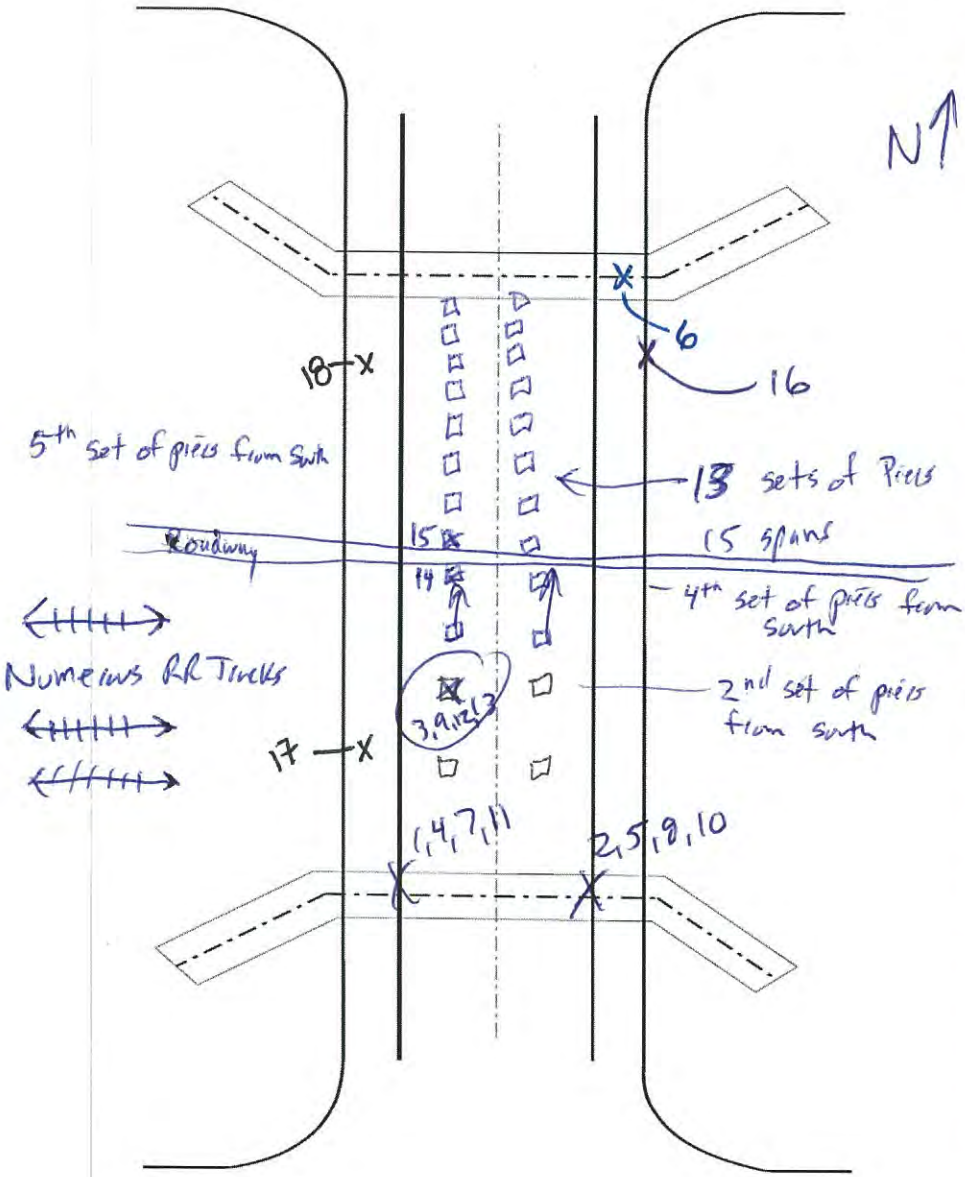

SAMPLE LOCATION PLAN VIEW - N.T.S.

Field Inspection Checklist Item	Investigated	Present	Sampled
Girder Paint	☐	☐	☒
Truss Paint	☐	☐	☒
Abutment Coating Paint	☐	☐	☒
Abutment Caulk	☐	☐	☒ see 3571
Abut. Exp. Jt. Filler	☒	☐	☐
Headwall Sheet Packing	☐	☐	☒
Bearing Pad	☐	☐	☒
Transite Pipe	☒	☐	☐
Pipe Coating/Wtr. Proof	☒	☐	☐
Scupper Wtr. Proof	☒	☐	☐
Dum Dum Paint	☒	☐	☐
Deck Caulk	☐	☐	☒
Deck Exp. Jt. Filler	☒	☐	☐
Approach Sheet Packing	☒	☐	☐
Railing Paint	☒	☐	☐
Railing Caulk	☒	☐	☐
Sidewalk Caulk	☒	☐	☐
Lighting Pole Caulk	☒	☐	☐
Masonry Castings	☒	☐	☐
Miscellaneous Tar	☒	☐	☐
Utilities	☒	☐	☐
Other Vinyl pipe	☒	☐	☒
Other	☐	☐	☐
Other	☐	☐	☐
Other	☐	☐	☐
Other	☐	☐	☐

Notes: Deck has rubber expansion joints, no other caulks identified.
Abutments have sheet packing.
Samples girder paint, masonry paint, and bearing pads.
Bridge inspected over numerous days.

EMSL Analytical, Inc.
490 Rowley Road, Depew, NY 14043
Phone/Fax: (716) 651-0030 / (716) 651-0394
http://www.EMSL.com buffalolab@emsl.com

EMSL Order:	141401420
CustomerID:	WATT50A
CustomerPO:	
ProjectID:	

Attn: **Scott Matthews**
Watts Architecture & Engineering
2610 Salina Street
Syracuse, NY 13205

Phone:	(315) 443-8611
Fax:	(315) 443-8605
Received:	04/04/14 12:00 PM
Analysis Date:	4/11/2014
Collected:	2/10/2014

Project: **13092 / I-81 Viaduct Replacement or New Urban Renewal, BIN 1093572 (481 NB Over CSX RR Yard)**

Test Report:Asbestos Analysis of Bulk Material

Test	Analyzed Date	Color	Non Asbestos Fibrous	Non Asbestos Non-Fibrous	Asbestos
Sample ID 1093572-1 *141401420-0001*		**Description** **Homogeneity**	bearing pad Heterogeneous		
PLM NYS 198.1 Friable					**Not Analyzed**
PLM NYS 198.6 VCM					**Not Analyzed**
PLM NYS 198.6 NOB	4/8/2014	Brown /Green			**Inconclusive: None Detected**
TEM NYS 198.4 NOB	4/11/2014	Brown /Green			**None Detected**
Sample ID 1093572-2 *141401420-0002*		**Description** **Homogeneity**	bearing pad Homogeneous		
PLM NYS 198.1 Friable					**Not Analyzed**
PLM NYS 198.6 VCM					**Not Analyzed**
PLM NYS 198.6 NOB	4/8/2014	Brown			**Inconclusive: None Detected**
TEM NYS 198.4 NOB	4/11/2014	Brown			**None Detected**
Sample ID 1093572-3 *141401420-0003*		**Description** **Homogeneity**	bearing pad Homogeneous		
PLM NYS 198.1 Friable					**Not Analyzed**
PLM NYS 198.6 VCM					**Not Analyzed**
PLM NYS 198.6 NOB	4/8/2014	Brown			**Inconclusive: None Detected**
TEM NYS 198.4 NOB	4/11/2014	Brown			**None Detected**
Sample ID 1093572-4 *141401420-0004*		**Description** **Homogeneity**	sheet packing Homogeneous		
PLM NYS 198.1 Friable					**Not Analyzed**
PLM NYS 198.6 VCM					**Not Analyzed**
PLM NYS 198.6 NOB	4/8/2014	Black			**9.9% Chrysotile** **9.9% Total**
TEM NYS 198.4 NOB	4/11/2014				**Not Analyzed**
Sample ID 1093572-5 *141401420-0005*		**Description** **Homogeneity**	sheet packing		
PLM NYS 198.1 Friable					**Not Analyzed**
PLM NYS 198.6 VCM					**Not Analyzed**
PLM NYS 198.6 NOB	4/8/2014				**Positive Stop (Not Analyzed)**
TEM NYS 198.4 NOB	4/11/2014				**Not Analyzed**

Initial Report From 04/11/2014 09:10:41

EMSL Analytical, Inc.
490 Rowley Road, Depew, NY 14043
Phone/Fax: (716) 651-0030 / (716) 651-0394
http://www.EMSL.com buffalolab@emsl.com

EMSL Order:	141401420
CustomerID:	WATT50A
CustomerPO:	
ProjectID:	

Test Report:Asbestos Analysis of Bulk Material

Test		Color	Fibrous	Non Asbestos Non-Fibrous	Asbestos
Sample ID 1093572-6 *141401420-0006*		**Description** **Homogeneity**	sheet packing		
PLM NYS 198.1 Friable					**Not Analyzed**
PLM NYS 198.6 VCM					**Not Analyzed**
PLM NYS 198.6 NOB	4/8/2014				**Positive Stop (Not Analyzed)**
TEM NYS 198.4 NOB	4/11/2014				**Not Analyzed**
Sample ID 1093572-7 *141401420-0007*		**Description** **Homogeneity**	green girder paint Homogeneous		
PLM NYS 198.1 Friable					**Not Analyzed**
PLM NYS 198.6 VCM					**Not Analyzed**
PLM NYS 198.6 NOB	4/8/2014	Green			**Inconclusive: None Detected**
TEM NYS 198.4 NOB	4/11/2014	Green			**None Detected**
Sample ID 1093572-8 *141401420-0008*		**Description** **Homogeneity**	green girder paint Homogeneous		
PLM NYS 198.1 Friable					**Not Analyzed**
PLM NYS 198.6 VCM					**Not Analyzed**
PLM NYS 198.6 NOB	4/8/2014	Green			**Inconclusive: None Detected**
TEM NYS 198.4 NOB	4/11/2014	Green			**None Detected**
Sample ID 1093572-9 *141401420-0009*		**Description** **Homogeneity**	green girder paint Homogeneous		
PLM NYS 198.1 Friable					**Not Analyzed**
PLM NYS 198.6 VCM					**Not Analyzed**
PLM NYS 198.6 NOB	4/8/2014	Green			**Inconclusive: None Detected**
TEM NYS 198.4 NOB	4/11/2014	Green			**None Detected**
Sample ID 1093572-10 *141401420-0010*		**Description** **Homogeneity**	off-white/grey masonry paint Homogeneous		
PLM NYS 198.1 Friable					**Not Analyzed**
PLM NYS 198.6 VCM					**Not Analyzed**
PLM NYS 198.6 NOB	4/8/2014	Gray /White			**Inconclusive: None Detected**
TEM NYS 198.4 NOB	4/11/2014	Gray /White			**None Detected**
Sample ID 1093572-11 *141401420-0011*		**Description** **Homogeneity**	off-white/grey masonry paint Homogeneous		
PLM NYS 198.1 Friable					**Not Analyzed**
PLM NYS 198.6 VCM					**Not Analyzed**
PLM NYS 198.6 NOB	4/8/2014	Gray /White			**Inconclusive: None Detected**
TEM NYS 198.4 NOB	4/11/2014	Gray /White			**None Detected**

Initial Report From 04/11/2014 09:10:41

EMSL Analytical, Inc.
490 Rowley Road, Depew, NY 14043
Phone/Fax: (716) 651-0030 / (716) 651-0394
http://www.EMSL.com buffalolab@emsl.com

EMSL Order:	141401420
CustomerID:	WATT50A
CustomerPO:	
ProjectID:	

Test Report:Asbestos Analysis of Bulk Material

Test		Color	Fibrous	Non Asbestos Non-Fibrous	Asbestos
Sample ID 1093572-12 *141401420-0012*		**Description** **Homogeneity**	off-white/grey masonry paint Homogeneous		
PLM NYS 198.1 Friable					**Not Analyzed**
PLM NYS 198.6 VCM					**Not Analyzed**
PLM NYS 198.6 NOB	4/8/2014	Gray /White			**Inconclusive: None Detected**
TEM NYS 198.4 NOB	4/11/2014	Gray /White			**None Detected**
Sample ID 1093572-13 *141401420-0013*		**Description** **Homogeneity**	vinyl drain pipe		
PLM NYS 198.1 Friable					**Not Analyzed**
PLM NYS 198.6 VCM					**Not Analyzed**
PLM NYS 198.6 NOB	4/8/2014				**Insufficient Residue**
Final Residue <1% of original subsample – Non-ACM					
TEM NYS 198.4 NOB	4/11/2014				**Insufficient Residue**
Sample ID 1093572-14 *141401420-0014*		**Description** **Homogeneity**	vinyl drain pipe		
PLM NYS 198.1 Friable					**Not Analyzed**
PLM NYS 198.6 VCM					**Not Analyzed**
PLM NYS 198.6 NOB	4/8/2014				**Insufficient Residue**
Final Residue <1% of original subsample – Non-ACM					
TEM NYS 198.4 NOB	4/11/2014				**Insufficient Residue**
Sample ID 1093572-15 *141401420-0015*		**Description** **Homogeneity**	vinyl drain pipe Homogeneous		
PLM NYS 198.1 Friable					**Not Analyzed**
PLM NYS 198.6 VCM					**Not Analyzed**
PLM NYS 198.6 NOB	4/8/2014	Brown			**Inconclusive: None Detected**
TEM NYS 198.4 NOB	4/11/2014	Brown			**None Detected**
Sample ID 1093572-16 *141401420-0016*		**Description** **Homogeneity**	beige paint on deck sidewalls Homogeneous		
PLM NYS 198.1 Friable					**Not Analyzed**
PLM NYS 198.6 VCM					**Not Analyzed**
PLM NYS 198.6 NOB	4/8/2014	Beige			**Inconclusive: None Detected**
TEM NYS 198.4 NOB	4/11/2014	Beige			**None Detected**
Sample ID 1093572-17 *141401420-0017*		**Description** **Homogeneity**	beige paint on deck sidewalls Homogeneous		
PLM NYS 198.1 Friable					**Not Analyzed**
PLM NYS 198.6 VCM					**Not Analyzed**
PLM NYS 198.6 NOB	4/8/2014	Beige			**Inconclusive: None Detected**
TEM NYS 198.4 NOB	4/11/2014	Beige			**None Detected**

Initial Report From 04/11/2014 09:10:41

EMSL Analytical, Inc.
490 Rowley Road, Depew, NY 14043
Phone/Fax: (716) 651-0030 / (716) 651-0394
http://www.EMSL.com buffalolab@emsl.com

EMSL Order:	141401420
CustomerID:	WATT50A
CustomerPO:	
ProjectID:	

Test Report:Asbestos Analysis of Bulk Material

Test		Color	Fibrous	Non-Fibrous	Asbestos
			Non Asbestos		
Sample ID	1093572-18	**Description**	beige paint on deck sidewalls		
	141401420-0018	**Homogeneity**	Homogeneous		
PLM NYS 198.1 Friable					**Not Analyzed**
PLM NYS 198.6 VCM					**Not Analyzed**
PLM NYS 198.6 NOB	4/8/2014	Beige			**Inconclusive: None Detected**
TEM NYS 198.4 NOB	4/11/2014	Beige			**None Detected**

Analyst(s)
Rachel Giese
Rhonda McGee

Rhonda McGee, Laboratory Manager
or other approved signatory

NOB = Non Friable Organically Bound N/A = Not Applicable VCM = Vermiculite Containing Material

-In New York State, TEM is currently the only method that can be used to determine if NOB materials can be considered or treated as non-asbestos containing.
All samples examined for the presence of vermiculite when analyzed via NYS 198.1.
-NYS Guidelines for Vermiculite containing samples are available at http://www.wadsworth.org/labcert/elapcert/forms/VermiculiteInterimGuidance_Rev070913.pdf
EMSL maintains liability limited to cost of analysis. This report relates only to the samples reported above and may not be reproduced, except in full, without written approval by EMSL. EMSL bears no responsibility for sample collection activities or analytical method limitations. Interpretation and use of test results are the responsibility of the client. Samples were received in good condition unless otherwise noted.
This report must not be used by the client to claim product certification, approval, or endorsement by NVLAP, NIST, or any agency of the federal government. This report may contain data that is not covered by the NVLAP accreditation.

Samples analyzed by EMSL Analytical, Inc. Depew, NY NYS ELAP 11606

Initial Report From 04/11/2014 09:10:41

14401420

OrderID: 141400415

WATTS ARCHITECTURE & ENGINEERING
ASBESTOS BULK SAMPLE CHAIN-OF-CUSTODY

Date: 2/10/14

Client: Parsons Engineering

Project: I-81 Viaduct Replacement or New Urban Arterial

Building / Location: BIN 1093572 (481 NB over CSX RR Yard)

Contact: Scott Matthews at (315) 443-8611

Email Preliminary Results to: smatthews@watts-ae.com

Mail Invoice to: Accounts Payable
Watts Architecture & Engineering
95 Perry Street, Buffalo, NY 14203

Mail Report to: Scott Matthews
Watts Architecture & Engineering
2610 S Salina Street, Syracuse, NY 13210

Watts Project No.: 13092

Turnaround Requested: ___ 3 Hr. ___ 48 Hr.

Analysis Requested: ___ 6 Hr. ___ 72 Hr.

PLM X TEM X ___ 12 Hr. X ~~5 Day~~

___ 24 Hr. ___ 6-10 Day

per Scott 1 Week 4/4/14

Sample Number	Material Description	Sample Location	Laboratory Results PLM	Laboratory Results TEM
1093572- 1	Bearing pad	South end / west		
2	Bearing pad	South end / weast		
3	Bearing pad	2nd pier from south end		
4	Sheet packing	South end / west		
5	Sheet packing	South end / weast		
6	Sheet packing	North end / east		
7	Green girder paint	South end / west		
8	Green girder paint	South end / weast		
9	Green girder paint	2nd pier from south end		
10	Off-white/grey masonry paint	South end abutment wall / ease		
11	Off-white/grey masonry paint	South end abutment wall / west		
12	Off-white/grey masonry paint	2nd pier from south end		

Sampled By: Scott Matthews Date: 3/19/2014 Received By: ___ Date: Fr 12pm

Relinquished By: Scott Matthews to Fedex Date: 4/3/2014 Received By: ___ Date: ___

Comments: Positive Stop Anywhere in Series

RECEIVED APR 04 2014 BY:

C:\Documents and Settings\wkoch\Desktop\Blanks\Blank Asbestos COC
4/3/2014

14140142O

2 4/24/14

OrderID: 141400853

WATTS ARCHITECTURE & ENGINEERING
ASBESTOS BULK SAMPLE CHAIN-OF-CUSTODY

Page: ~~1~~ of 2
Date: 2/10/14

Client: Parsons Engineering
Project: I-81 Viaduct Replacement or New Urban Arterial
Building / Location: BIN 1093572 (481 NB over CSX RR Yard)
Contact: Scott Matthews at (315) 443-8611
Email Preliminary Results to: smatthews@watts-ae.com
Mail Invoice to: Accounts Payable
Watts Architecture & Engineering
95 Perry Street, Buffalo, NY 14203

Watts Project No.: 13092
Turnaround Requested: ____ 3 Hr. ____ 48 Hr.
Analysis Requested: ____ 6 Hr. ____ 72 Hr.
PLM X TEM X ____ 12 Hr. ~~X~~ 5 Day
____ 24 Hr. ____ 6-10 Day

Mail Report to: Scott Matthews
Watts Architecture & Engineering
2610 S Salina Street, Syracuse, NY 13210

as per Scott

4/4/14

1 Week

Sample Number	Material Description	Sample Location	Laboratory Results PLM	Laboratory Results TEM
1093572- 13	Vinyl drain pipe	2nd pier from south		
14	Vinyl drain pipe	4th pier from south		
15	Vinyl drain pipe	5th pier from south		
16	Beige paint on deck sidewalls	Northeast corner		
17	Beige paint on deck sidewalls	Southwest corner		
18	Beige paint on deck sidewalls	Northwest corner		

RECEIVED APR 0 4 2014 BY

Sampled By: Scott Matthews Date: 3/19/2014 Received By: ____ Date: 12pm
Relinquished By: Scott Matthews to Fedex Date: 4/3/2014 Received By: FX Date: ____
Comments: Positive Stop Anywhere in Series

C:\Documents and Settings\wkoch\Desktop\Blanks\Blank Asbestos COC
4/3/2014

Watts
Architects
&Engineers

BIN 1093572 Inspection Photos

I-81 (Former I-481) NB over Conrail Railroad

Photo 1

Photo 2

Photo 3

Photo 4

Photo 5

Photo 6

Photo 7

Photo 8

F.I.S.H. 70-7

FED. RD. REG. NO.	STATE	FEDERAL AID PROJECT NO.	SHEET NO.	TOTAL SHEETS
1	NEW YORK	I-890-3(28) I-481-2(18)	179	302

INTERSTATE ROUTE CONNECTION 570
BUTTERNUT INTERCHANGE (PHASE 2)
ONONDAGA COUNTY

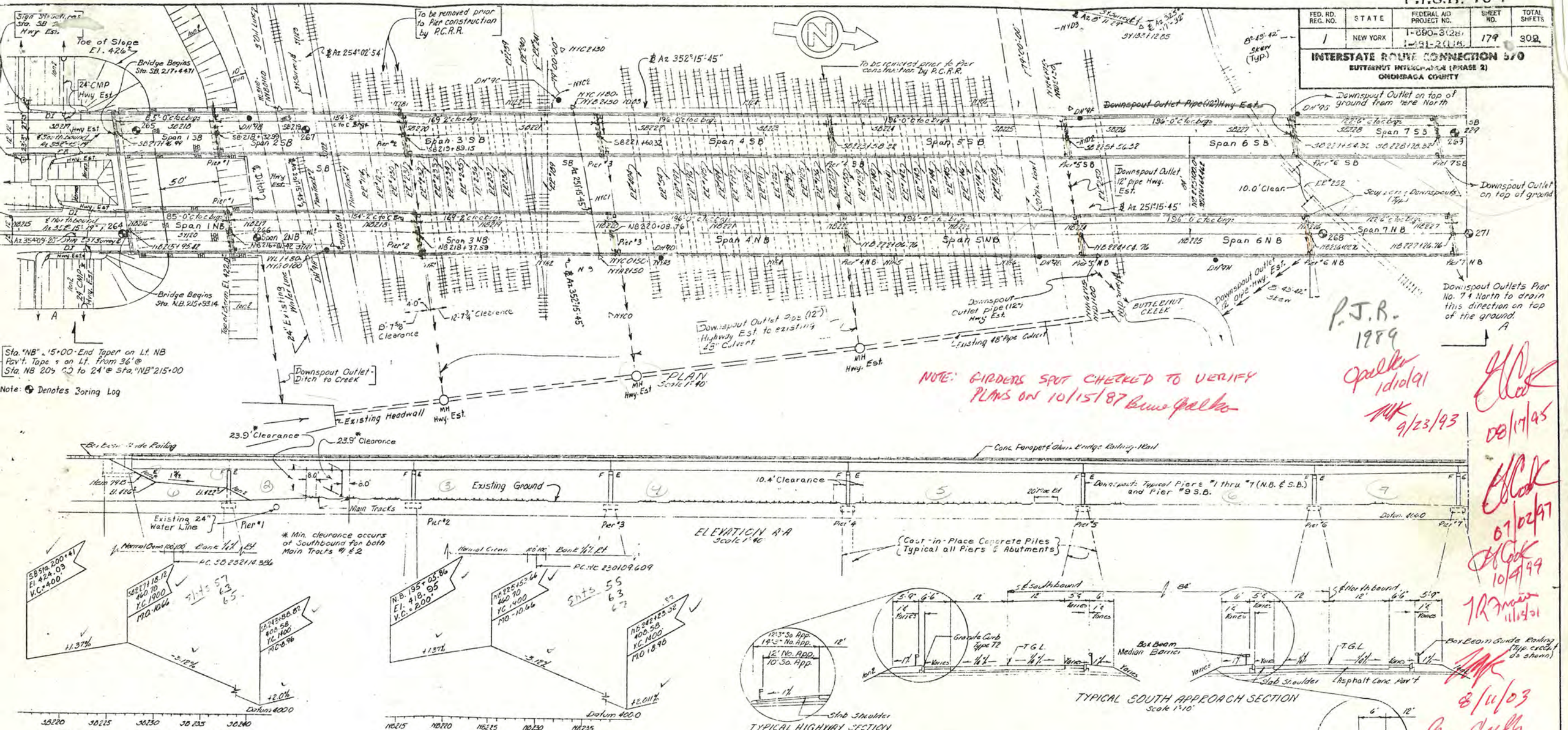

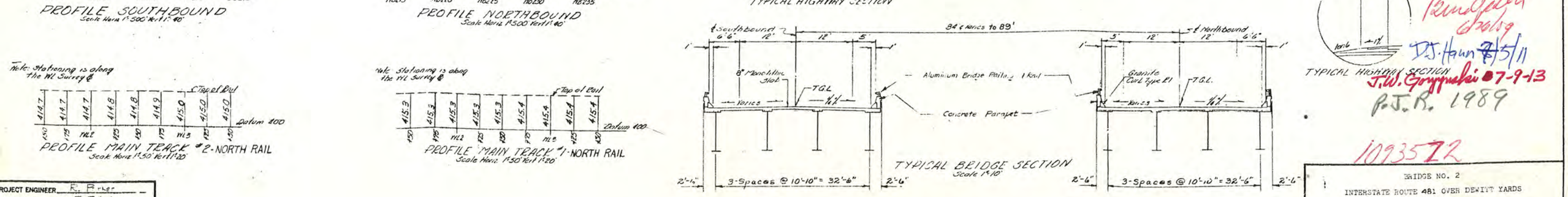

PROJECT ENGINEER	R. Baker
IN CHARGE OF	F. Eckel
DESIGNED BY	
DESIGN CHECKED BY	
DETAILED BY	H.F. Rafto
DETAIL CHECKED BY	A.E. Bernhardt

BRIDGE NO. 2
INTERSTATE ROUTE 481 OVER DEWITT YARDS

LAYOUT

DRAWING NO. 1 OF 50

FED. RD. REG. NO.	STATE	FEDERAL AID PROJECT NO.	SHEET NO.	TOTAL SHEETS
1	NEW YORK	I-81-3(38) I-81-2(16)	181	309

INTERSTATE ROUTE CONNECTION 370
SUTTER'S INTERCHANGE (PHASE 2)
ONONDAGA COUNTY

GENERAL NOTES

G1 - Design Specifications AASHO 1969 modified and current American Welding Society modified. The stresses assumed for design purposes conform to 1969 AASHO Specifications with the 28 day concrete stress (f'c) = 3000 psi minimum.

L.L. HS20-44 or two 24,000 lb. axles spaced 4'-0" on centers.

G2 - Material and Construction Specifications: Specifications of N.Y.S. Department of Public Works dated January 2, 1962 with current additions and modifications.

G3 - The Contractor's attention is directed to the Special Notes for this structure which appear in the proposal. Particular attention should be given to the foundation note which briefly outlines the anticipated subsurface conditions at the site of the structure and which specifies certain requirements relative to construction.

G4 - The cost of furnishing and placing water used for ~~molding and~~ selected granular fill will be paid for under Item 1W and 1WA of the highway portion of the contract.

G5 - Reinforcing bars shall be lapped a minimum of 24 diameters.

G6 - The cost of all joint material will be included in the price bid for the various items of the contract.

G7 - All concrete anchor studs which are attached to the various steel details shall meet the requirements listed in paragraph 5, Construction Details, of Item 29B-Stud Shear Connectors. Payment for furnishing and placing the concrete anchors will be included in the unit price bid for the item to which the anchors are attached.

G8 - Due to the incompatability of the caulking compound with the premoulded bituminous joint filler, a layer of an approved type of pressure-sensitive release tape shall be placed between these materials.

The contractor may elect to change the layout of diaphragms from that shown on the contract plans. Placement of the diaphragms parallel with the skew (in line, not staggered) will be permitted. The stiffener locations may be altered to accommodate the revised diaphragm layout, but the spacing of stiffeners shown on the plans shall not be exceeded. Diaphragm spacing shall not exceed 25 feet.

CONCRETE ITEMS AND CEMENT

Description	Item No.		Type of Cement
All footings	20		2
Abutment pedestals, backwalls and wingwalls	20		2
Abutment headers and parapets	18		2
Pier columns, beams, pedestals, and crash walls	18		2
Monolithic slab	18MA		2
Parapet (Superstructure & Substructure)	18		2
Cast-in-Place Concrete Piles	85C		2

All concrete shall have entrained air in accordance with the specifications.

PROJECT ENGINEER R. Paciel
IN CHARGE OF F. Eckert
DESIGNED BY
DESIGN CHECKED BY
DETAILED BY
DETAIL CHECKED BY

SUPERSTRUCTURE NOTES

Sup 1 - After all superstructure steel has been erected, elevations shall be taken on the top of the steel at the centerline of web, at each centerline of bearing, center of the span and at other locations where theoretical bottom of the slab elevations are indicated on the plans.

The depth of haunch required to position the slab forms is obtained as follows. From the measured top of steel elevations subtract the deflections due to slab and superimposed dead load. Subtract this result from the listed bottom of slab elevation.

Sup 2 - All bearings are to be field welded to beams or girders.

Sup 3 - The Structural Slab on this structure shall be formed with permanent corrugated metal forms for concrete decks.

Sup 4 - All connection plates used in pairs shall be welded to the web and be placed paint tight against both flanges. This may be accomplished by cutting the stiffeners to fit or by cutting the stiffeners 1/8 inch short and then placing the stiffener tightly against the tension flange and welding the opposite end to the compression flange. Fitted stiffeners shall not be driven in place with sufficient force to distort the flange, web or stiffeners.

Sup 5 - All intermediate stiffeners and/or connection plates used singly on one side only or staggered on both sides shall be placed paint tight against the flange which is in tension under dead load and welded to the web and flange which is in compression.

Sup 6 - All bearing stiffeners shall be fillet welded to the web and top flange and groove welded or milled to bear to the bottom flange.

Sup 7 - All intermediate transverse stiffeners and connection plates shall be vertical unless otherwise approved by the Deputy Chief Engineer (Design).

Sup 8 - All bearing stiffeners and the ends of all girders shall be vertical.

Sup 9 - All anchor bolts shall be galvanized in accordance with the requirements of Material Specification M19.

Sup 10 - Structural steel members which are imbedded or in contact with cast or pneumatically projected concrete shall not be painted.

Sup 11 - Machine finished sliding surfaces in contact shall receive in the shop one coat of a hot mixture of white lead and tallow as provided for in the specifications under Part II, Section 3A, Painting. This shop coat of white lead and tallow shall be removed immediately prior to the assembly of the member in the field. All other machine finished surfaces shall be given one shop coat of paint.

Sup 12 - Wherever Modified A441 Steel is used, the flux for submerged arc welding shall be dried in ovens at 500°F. to 550°F. for at least two hours and stored in ovens held at 250°F. or more. Flux not used within 4 hours after removal from a drying or storage oven shall be redried before use.

Minimum preheat and Interpass Temperatures shall be as follows:

Thickness of Thickest Part at Point of Welding in Inches	
To 3/4, inclusive	70°F.
Over 3/4 to 1 1/2, inclusive	100°F.
Over 1 1/2 to 2 1/2, inclusive	175°F.
Over 2 1/2	250°F.

INDEX OF DRAWINGS

DRAWING NO.	CONTENTS	DRAWING NO.	CONTENTS
1	Layout	39	Joint sealer, waterstops, and trough
2	Layout	40	Approach shoulder details
3	Notes and estimate of quant.	41	Approach shoulder details
4	Earthwork	42	Bearings
5	South Abutment	43	Bearings
6	South Abutment	44	Bar list #1
7	North Abutment	45	Bar list #2
8	North Abutment	46	Bar list #3
9	Pier 1	47	Bar list #4
10	Piers 2, 3 and 4	48	Bar list #5
11	Piers 5 and 6	49	Bar list #6
12	Piers 7, 8 and 9 NBL	50	Bar list #7
13	Pier 9 SBL		
14	Pier 10		
15	Piers 11 and 12		
16	Piers 13 and 14		
17	Span 1		
18	Span 1		
19	Spans 2, 3, 4, 5 and 6		
20	Span 3		
21	Spans 6, 7 and 8		
22	Spans 4, 5 and 6		
23	Spans 7, 8 and 9		
24	Spans 7, 8 and 9		
25	Span 10		
26	Span 10		
27	Spans 11 thru 15 SB		
28	Spans 11 thru 15 SB		
29	Spans 11 thru 15 NB		
30	Spans 11 thru 15 NB		
31	Finger joint		
32	Downspout details		
33	Miscellaneous Details		
34	Miscellaneous Details		
35	Concrete parapet		
36	Railing details		
37	Railing layout 1		
38	Railing layout 2		

ESTIMATE OF QUANTITIES

ITEM NO.	DESCRIPTION	UNIT	TOTAL NEAT	TOTAL PROPOSAL	FINAL
2EF-B	Selected Granular Fill	C.Y.	8,000	8,000	
2UF	Underdrain Filter	C.Y.	20	20	
5B	Structure Excavation	C.Y.	4,850	4,850	
11HG	Perforated Corrugated Metal Pipe	L.F.	410	410	
	Underdrain - 6" Dia				
13DE-6	Downspouts - 6" Dia.	L.F.	56	60	
13DE-8	Downspouts - 8" Dia.	L.F.	794	800	
18	Class A Concrete for Structures	C.Y.	2,512	2,520	
18MA	Class A Concrete for Structures	S.F.	158,700	158,700	
20	Class B Concrete for Structures	C.Y.	2,211	2220	
24A	Bagged Screened Aggregate	C.Y.	110	110	
28	Bar Reinforcement for Structures	Lb.	2,110,000	2,110,000	
28B	Stud Shear Connectors	Ea.	30,160	30,160	
29	Structural Steel	Lb.	7,508,000	7,508,000	
37M(1)	Aluminum Bridge Railing (One Rail)	L.F.	8,680	8,680	
61	Bituminous Material	Gal.	168	170	
79B	Concrete Block Paving	S.Y.	1,130	1130	
83S	Steel Sheet Piling	S.F.	7,700	7,700	
83TAS	Temporary Sheet Piling	S.F.	18,800	18,800	
85C	Cast-in-Place Concrete Piles	L.F.	75,200	75,200	
87	Furnishing Equipment for Driving Piles	L.S.	Nec.	Nec	
94SBW	Stone Curb - (Granite)	L.F.	9,050	9,050	
101C	Drainage Trough	L.F.	320	320	
124	Sodding	S.Y.	210	210	
363J	Epoxy Protective Coating for Concrete	S.F.	9,150	9,150	
1WPS	Watering Plants and Sod	M/Gal.	4	4	

Note -
Where Item 13DC or Item 13DD appear on these drawings, the specifications for Item 13DE-6 and 13DE-8 shall apply.
Six inch diameter downspouts shall be paid for under Item 13DE-6
Eight inch diameter downspouts shall be paid for under Item 13DE-8

ITEM 29	
Type of Steel	Weight
A.S.T.M. Designation A36	1,917,000
" " A441	4,673,000
" " A441 Modified	1,378,500
" " A242	39,500
Total	7,508,000

BRIDGE NO. 2
INTERSTATE ROUTE 481 OVER DEWITT YARDS
GENERAL NOTES
ESTIMATE OF QUANTITIES TABLE
DRAWING NO. 3 OF 50

FED. RD. REG. NO.	STATE	FEDERAL AID PROJECT NO.	SHEET NO.	TOTAL SHEETS
1	NEW YORK	I-681-2(116)	182	300

INTERSTATE ROUTE CONNECTION 570
BUTTERNUT INTERCHANGE (PHASE 2)
ONONDAGA COUNTY

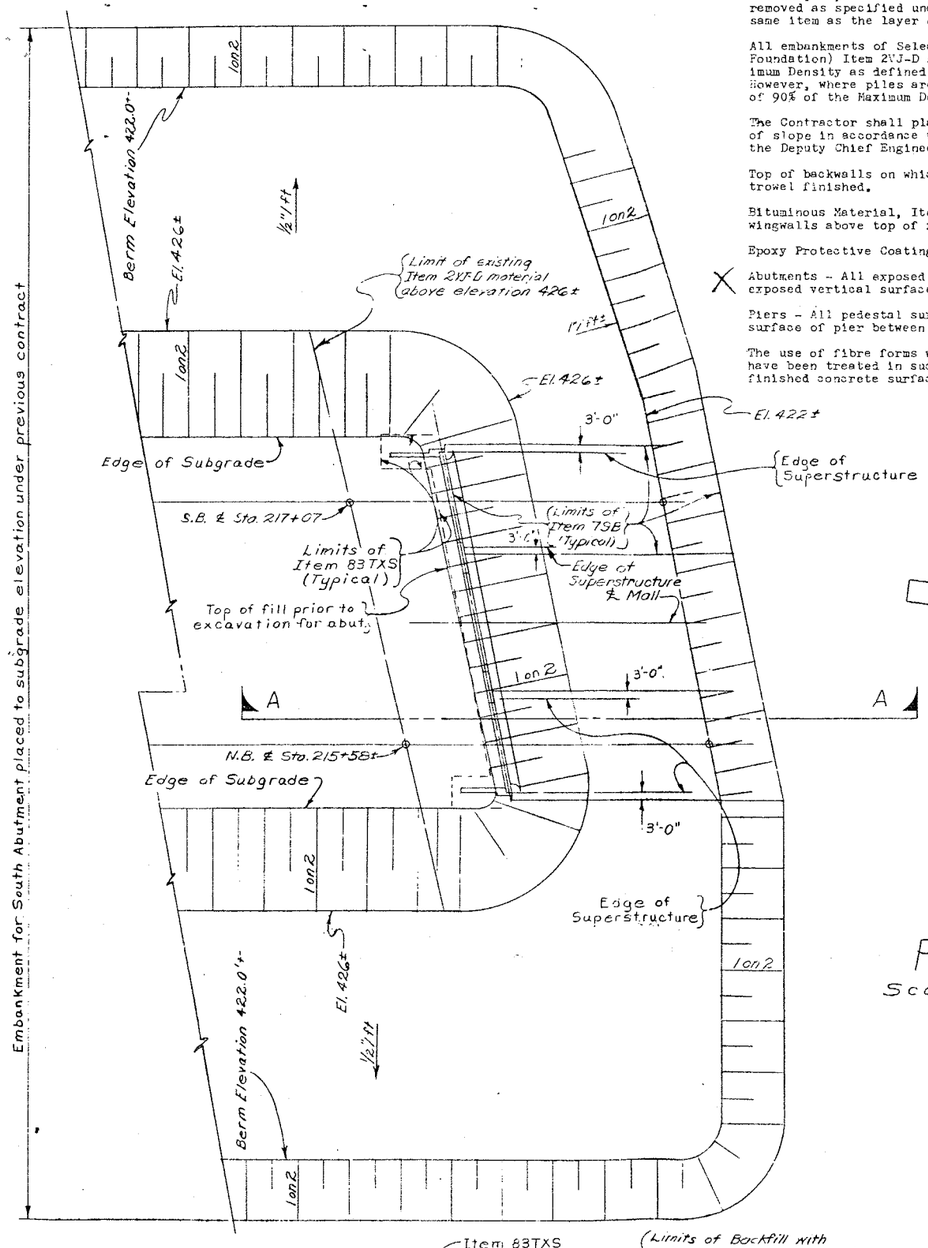

PLAN
Scale: 1" = 30'-0"

SUBSTRUCTURE NOTES

All sod, topsoil and unsuitable material under the substructure embankment shall be removed as specified under the General Excavation Specifications and replaced by the same item as the layer of embankment adjacent and above as shown on the plans.

All embankments of Selected Granular Fill, Item 2EF-B and Selected Fill (Bridge Foundation) Item 2VJ-D shall be compacted to a minimum dry density of 100% of Maximum Density as defined under "h. Embankments" of the General Excavation Specifications. However, where piles are to be placed through the embankment, a minimum dry density of 90% of the Maximum Density will be required.

The Contractor shall place and compact all fill for bridges between the final toes of slope in accordance with the plans and specifications in a manner satisfactory to the Deputy Chief Engineer (Design).

Top of backwalls on which asbestos sheet packing is to be placed shall be steel trowel finished.

Bituminous Material, Item 61, shall be applied to the backs of all abutments and wingwalls above top of footings, where fill is in contact with the walls.

Epoxy Protective Coating for Concrete shall be applied to the following surfaces:

Abutments - All exposed pedestal surfaces, including the area under the bearings, exposed vertical surfaces of backwall and curtain walls facing the superstructure.

Piers - All pedestal surfaces including the area under the bearings, and the top surface of pier between pedestals including the edge chamfer at top edge of pier.

The use of fibre forms will be permitted only if the interior surface of the forms have been treated in such a manner as to prevent helical corrugation marks on the finished concrete surface.

All exposed construction joints and exposed edges of concrete shall be chamfered one inch.

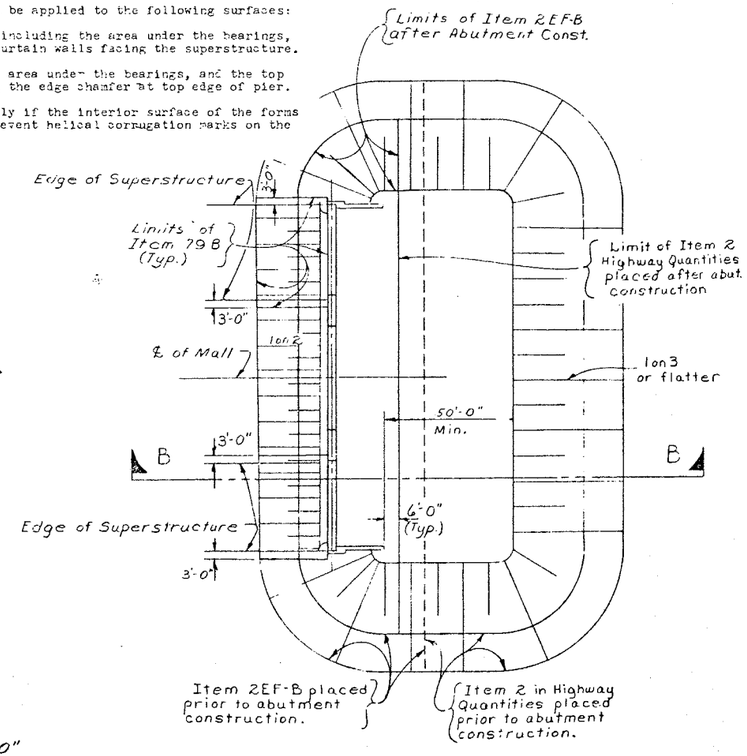

Note (A)
Remove any unsuitable material encountered below bottom of pier footing AOBE. Estimated depth of unsuitable material = 0 to 2 feet. Backfill to bottom of footing elevation with compacted Item 2 EF-B prior to driving piles.

The embankment for the South Abutment has been constructed to subgrade elevation under a previous contract.

The embankment for the North Abutment shall be constructed to the bottom of footing elevation and allowed to stand for a period of time satisfactory to the Deputy Chief Engineer (Structures) prior to driving piles and proceeding with abutment construction.

A six month waiting period is required after backfilling behind North Abutment prior to placing approach pavement at north end of bridge.

Items 2 and 2EF-B and Items 2 and 2VJ-D shall be placed simultaneously, in contact, on both sides of the vertical payment line. Sheeting or other means shall not be used to separate the two materials.

The installation of Selected Fill, Item 2EF-B at the North Abutment, or backfill at the South Abutment as shown on the structural plans, shall be completed immediately following the completion of abutments or walls.

All abutments and piers for this structure are to be supported on cast-in-place concrete piles.

For design purposes the pile load does not exceed 35 tons per pile.

Estimated length of cast-in-place concrete piles:

South Abutment = 75 Feet

Pier 1	S.B. = 55		Pier 9	S.B. = 70	
	N.B. = 60			N.B. = 70	
Pier 2	S.B. = 55		Pier 10	S.B. = 70	
	N.B. = 60			N.B. = 65	
Pier 3	S.B. = 60		Pier 11	S.B. = 65	
	N.B. = 65			N.B. = 65	
Pier 4	S.B. = 70		Pier 12	S.B. = 65	
	N.B. = 70			N.B. = 65	
Pier 5	S.B. = 75		Pier 13	S.B. = 55	
	N.B. = 80			N.B. = 65	
Pier 6	S.B. = 80		Pier 14	S.B. = 80	
	N.B. = 50			N.B. = 50*	
Pier 7	S.B. = 80				
	N.B. = 80		North Abutment = 65		
Pier 8	S.B. = 70				
	N.B. = 70				

* Pier #14 N.B. has an existing 48" diameter water main in close proximity. The water main is to be relocated under this contract. See Drawing 2.

It is anticipated that difficult driving of piles through the South Abutment embankment may be encountered and it may be necessary to utilize mechanical equipment for removing consolidated material from the location of the piles. This may be accomplished by various types of earth augers, well drilling equipment or other devices to remove the consolidated material to permit the piles to be driven to the desired depth or required resistance without distortion.

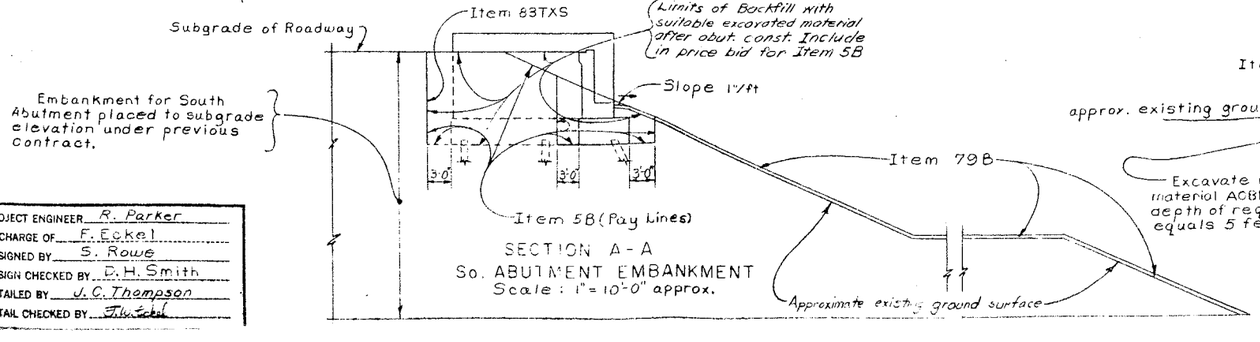

SECTION A-A
So. ABUTMENT EMBANKMENT
Scale: 1" = 10'-0" approx.

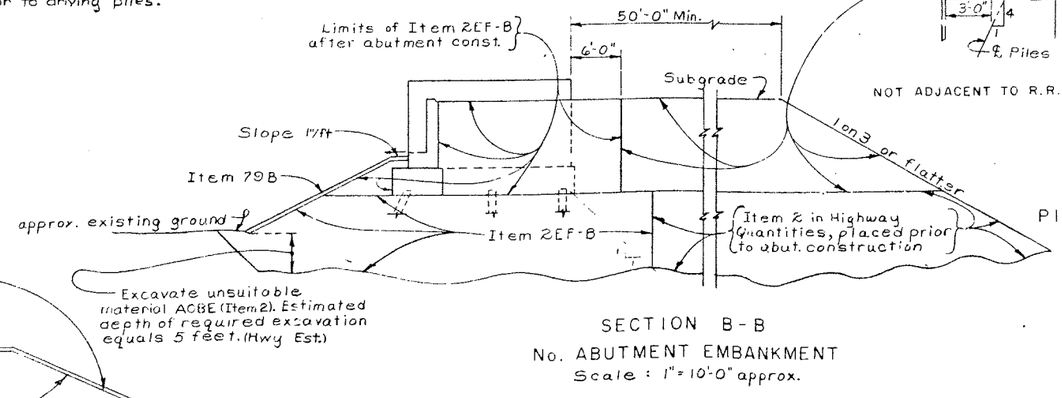

SECTION B-B
No. ABUTMENT EMBANKMENT
Scale: 1" = 10'-0" approx.

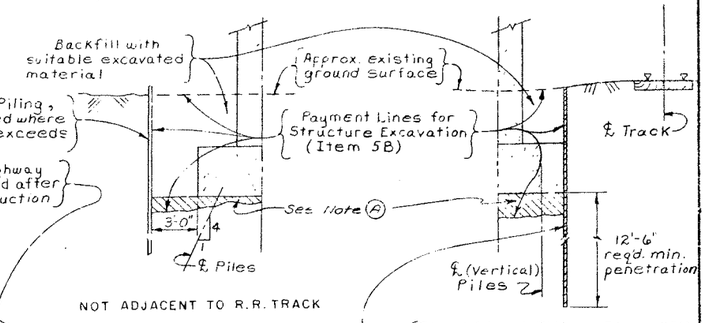

PIER EXCAVATION
Scale: 3/16" = 1'-0"

PROJECT ENGINEER	R. Parker
IN CHARGE OF	F. Eckel
DESIGNED BY	S. Rowe
DESIGN CHECKED BY	D.H. Smith
DETAILED BY	J.C. Thompson
DETAIL CHECKED BY	[illegible]

BRIDGE NO. 2
INTERSTATE ROUTE 481 OVER DEWITT YARDS

EARTHWORK

DRAWING NO. 4 OF 50

FED. RD. REG. NO.	STATE	FEDERAL AID PROJECT NO.	SHEET NO.	TOTAL SHEETS
1	NEW YORK	I-690-3(23) I-690-3(116)	183	206

INTERSTATE ROUTE CONNECTION 570
BUTTERNUT INTERCHANGE (PHASE 2)
ONONDAGA COUNTY

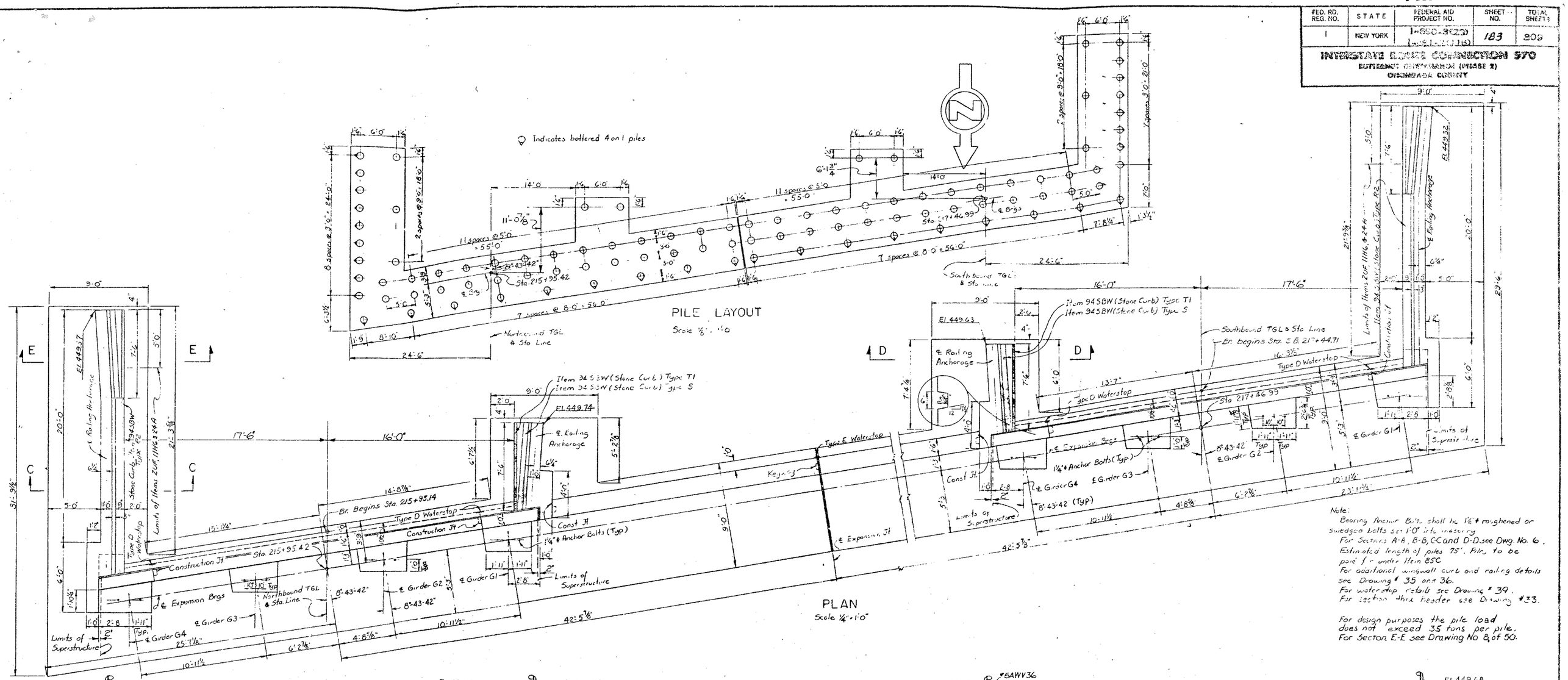

PROJECT ENGINEER R. Parker
IN CHARGE OF F. Eckert
DESIGNED BY D. Smith
DESIGN CHECKED BY S. Rowe
DETAILED BY D.H. Smith
DETAIL CHECKED BY H.G. Jones

FED. RD. REG. NO.	STATE	FEDERAL AID PROJECT NO.	SHEET NO.	TOTAL SHEETS
1	NEW YORK	I-890-3(28) I-481-2(116)	184	309

INTERSTATE ROUTE CONNECTION 570
BUTTERMILK INTERCHANGE (PHASE X)
ONONDAGA COUNTY

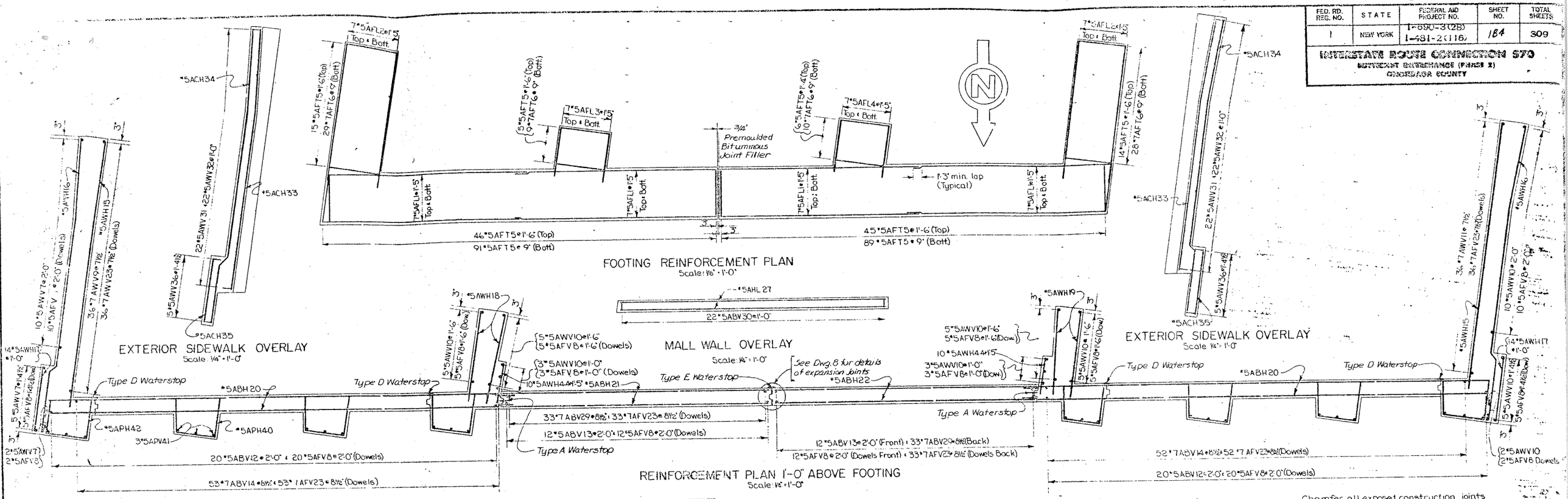

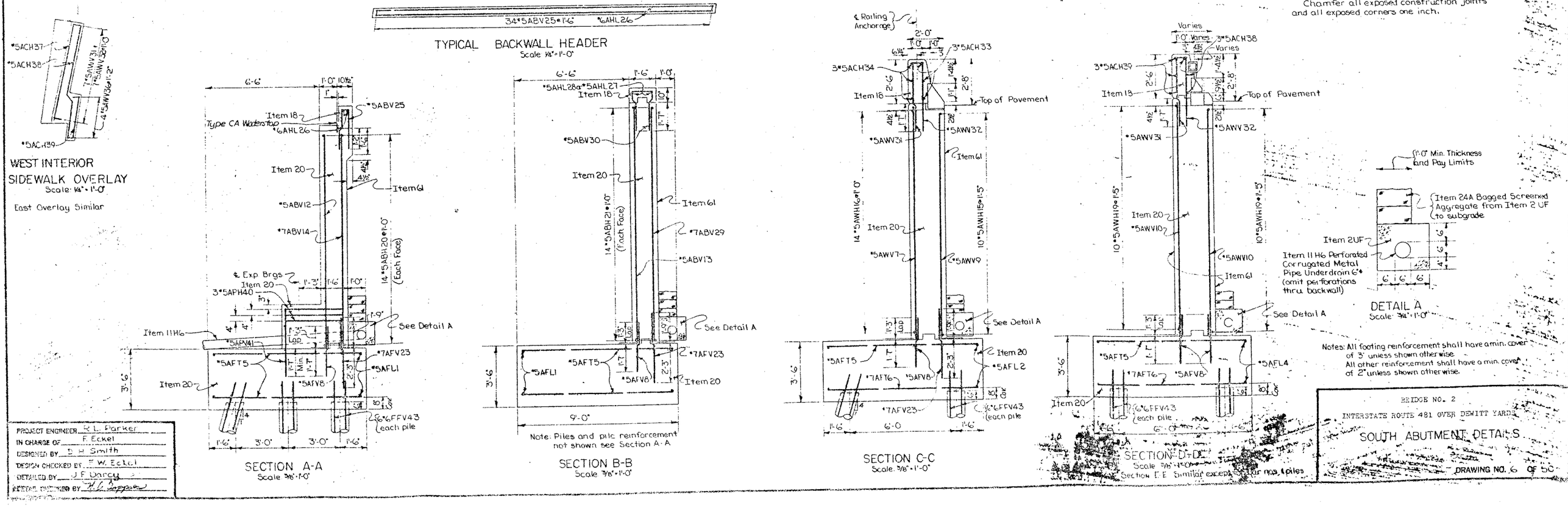

PROJECT ENGINEER R. L. Parker
IN CHARGE OF F. Eckel
DESIGNED BY D. H. Smith
DESIGN CHECKED BY F. W. Eckel
DETAILED BY J. F. Darcy
DETAIL CHECKED BY

BRIDGE NO. 2
INTERSTATE ROUTE 481 OVER DEWITT YARD
SOUTH ABUTMENT DETAILS

DRAWING NO. 6 OF 50

FED. RD. REG. NO.	STATE	FEDERAL AID PROJECT NO.	SHEET NO.	TOTAL SHEETS
1	NEW YORK	I-690-3(28) I-481-2(11)b	185	309

INTERSTATE ROUTE CONNECTION 570
BUTTERNUT INTERCHANGE (PHASE 2)
ONONDAGA COUNTY

Piles to be Cast-in-Place Concrete Piles, Item 85C
Estimated length of pile = 65 feet
For design purposes the pile load does not exceed 35 tons per pile.

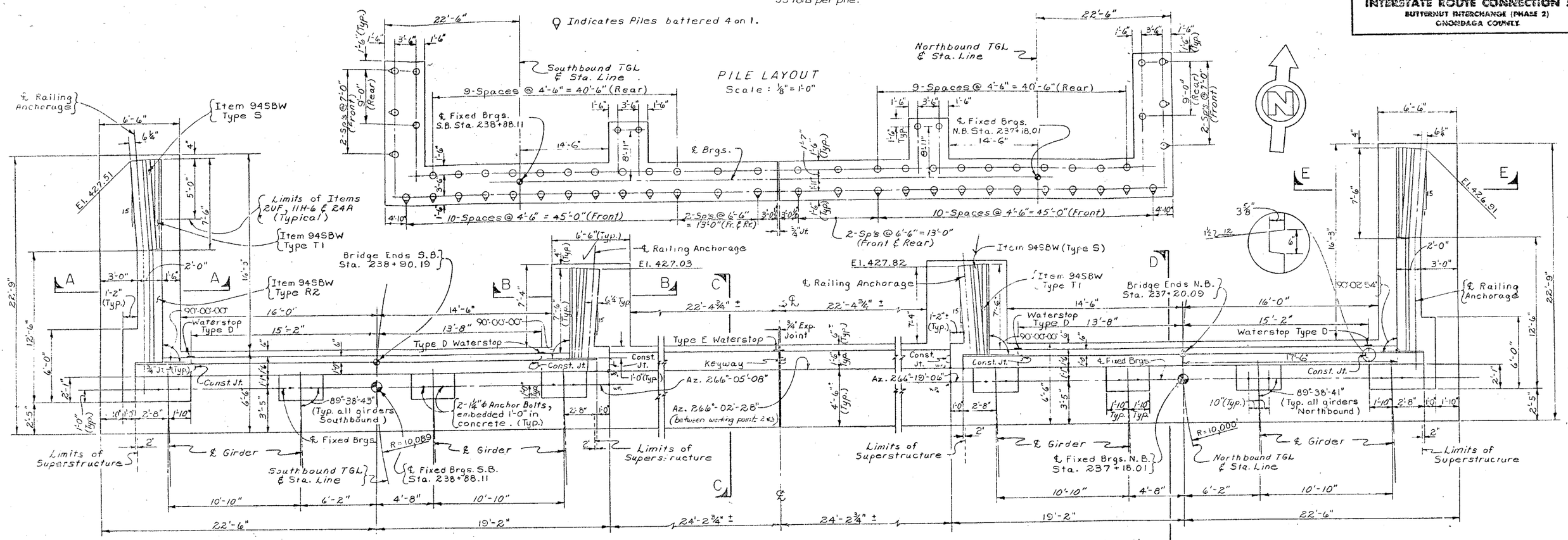

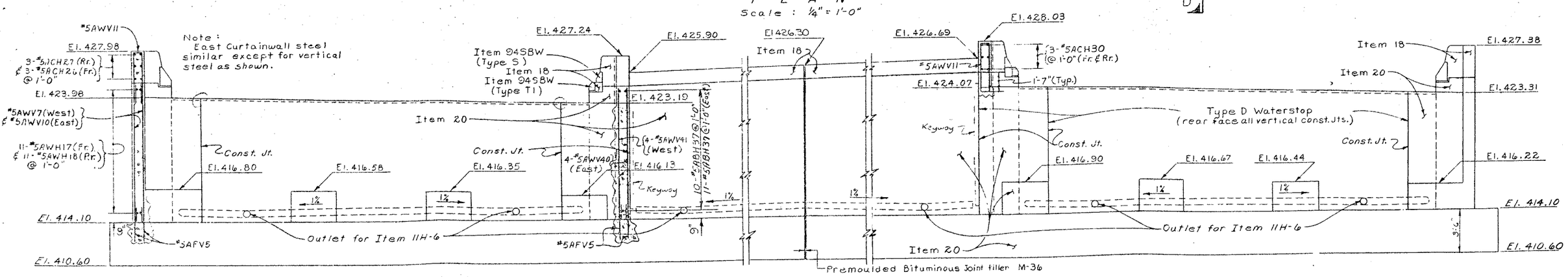

Note:
Piles not shown in Elevation.
Omit perforations in Item 11H-6 extension thru wall.

Note: Northwest overlays shown, Northeast similar by opposite hand.

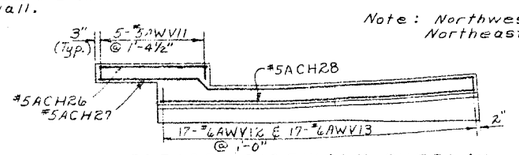

EXTERIOR SIDEWALK OVERLAY
Scale : 1/4" = 1'-0"

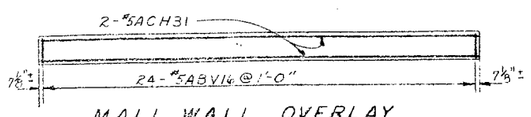

MALL WALL OVERLAY
Scale : 1/4" = 1'-0"

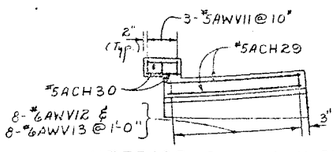

INTERIOR SIDEWALK OVERLAY
Scale: 1/4" = 1'-0"

PROJECT ENGINEER R. Parker
IN CHARGE OF E. Eckel
DESIGNED BY K. H. W. & Kaul
DESIGN CHECKED BY J. B. Sherman
DETAILED BY J. C. Thompson
DETAIL CHECKED BY D. H. South

BRIDGE NO. 2
INTERSTATE ROUTE 481 OVER DEWITT YARDS

NORTH ABUTMENTS

DRAWING NO. 7 OF 50

FED. RD. REG. NO.	STATE	FEDERAL AID PROJECT NO.	SHEET NO.	TOTAL SHEETS
1	NEW YORK	I-690-8 (28) I-481-2 (18)	186	307

INTERSTATE ROUTE CONSTRUCTION STD
DUTCHNOT BRIDGE (PIER 2)
ONONDAGA COUNTY

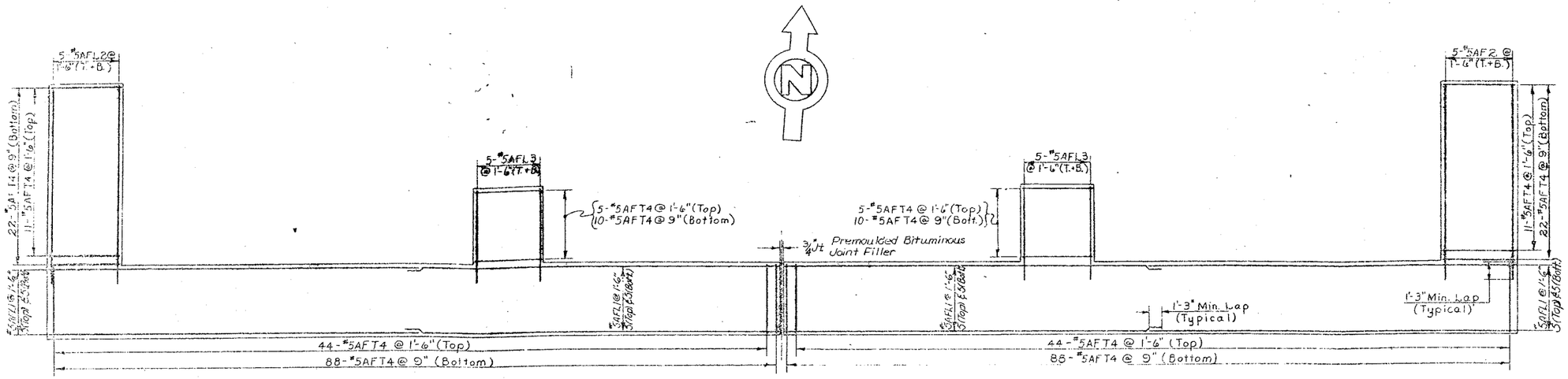

FOOTING REINFORCEMENT PLAN
Scale: 3/16" = 1'-0"

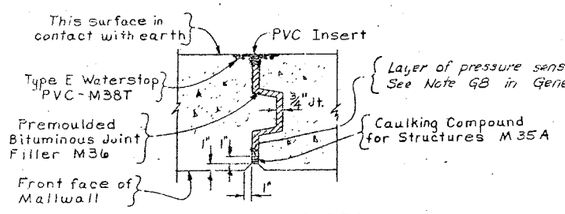

EXPANSION JOINT DETAIL
Scale: 1" = 1'-0"

REINFORCEMENT PLAN 1'-0" ABOVE FOOTING
Scale: 1/4" = 1'-0"

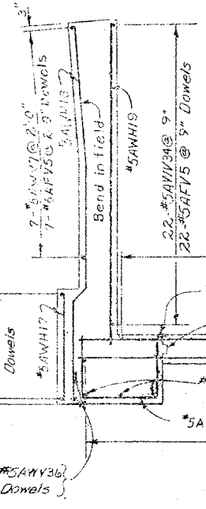

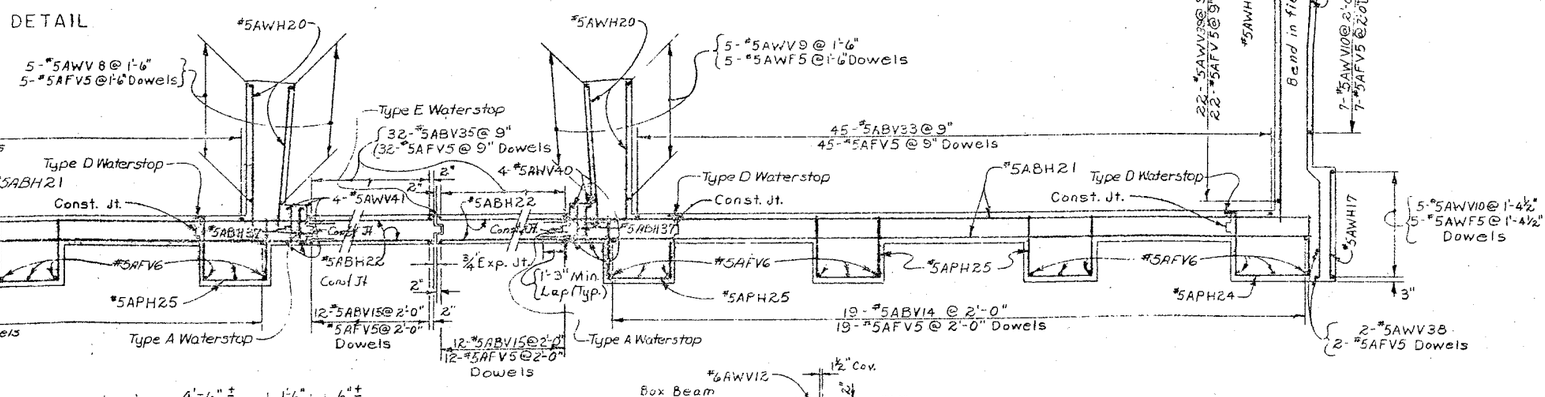

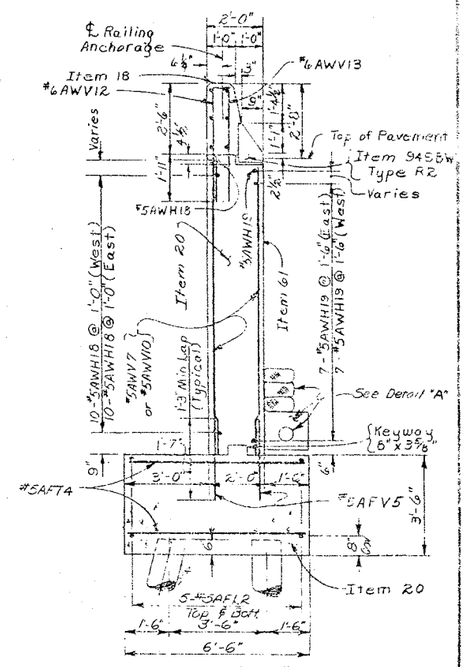

SECTION "A-A"
Scale: 3/16" = 1'-0"

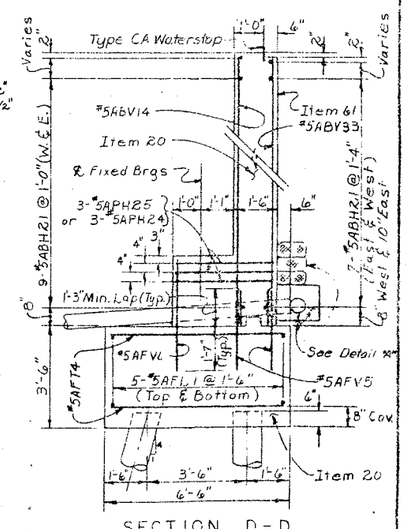

SECTION D-D
Scale: 3/8" = 1'-0"

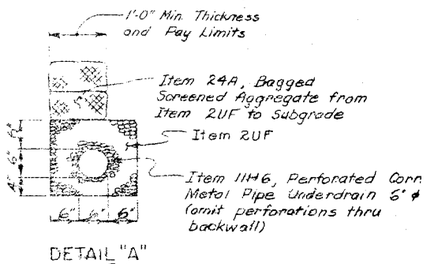

DETAIL "A"
Scale: 3/4" = 1'-0"

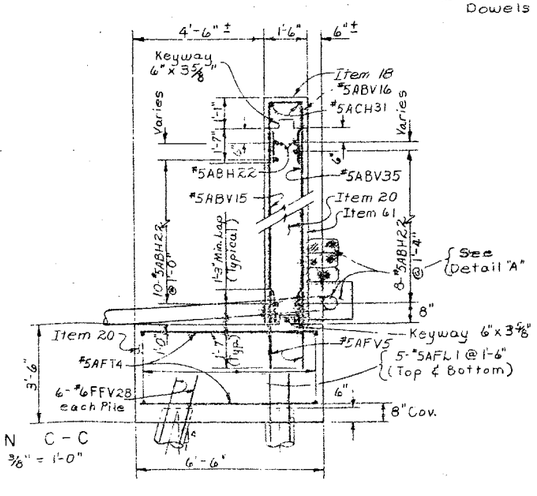

SECTION C-C
Scale: 3/8" = 1'-0"

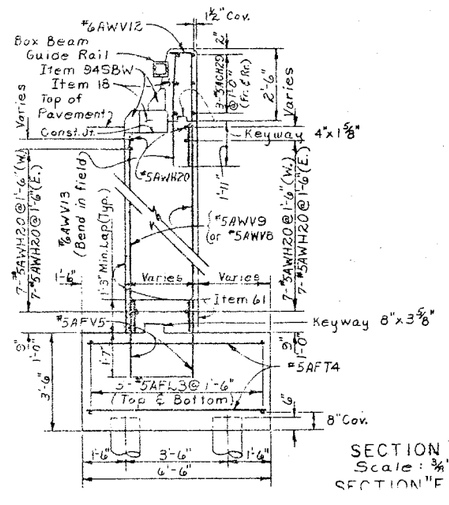

SECTION "B-B"
Scale: 3/8" = 1'-0"
SECTION "E-E" (Similar except for Pier No's and Piles)

Notes:-

See Drawing # 39 for Waterstops.

All footing reinforcement shall have a min. cover of 3" unless otherwise noted.

All other reinforcement shall have a min. cover of 2" unless otherwise noted.

All exposed construction joints shall be chamfered one inch.

All exposed corners shall be chamfered one inch.

PROJECT ENGINEER R. Parker
IN CHARGE OF J. E. Kiel
DESIGNED BY K. Wachter
DESIGN CHECKED BY K. Pao, E. H. Jensen
DETAILED BY J. Dunwat & J. C. C.
DETAIL CHECKED BY C. H. Smith

BRIDGE NO. 2
INTERSTATE ROUTE 481 OVER DEWITT YARDS

NORTH ABUTMENT DETAILS

DRAWING NO. 8 OF 5

FED. RD. REG. NO.	STATE	FEDERAL AID PROJECT NO.	SHEET NO.	TOTAL SHEETS
1	NEW YORK	(-080-3(26) 1-481-2(116)	187	309

INTERSTATE ROUTE CONSTRUCTION 570
DEWITT INTERCHANGE (PHASE 2)
ONONDAGA COUNTY

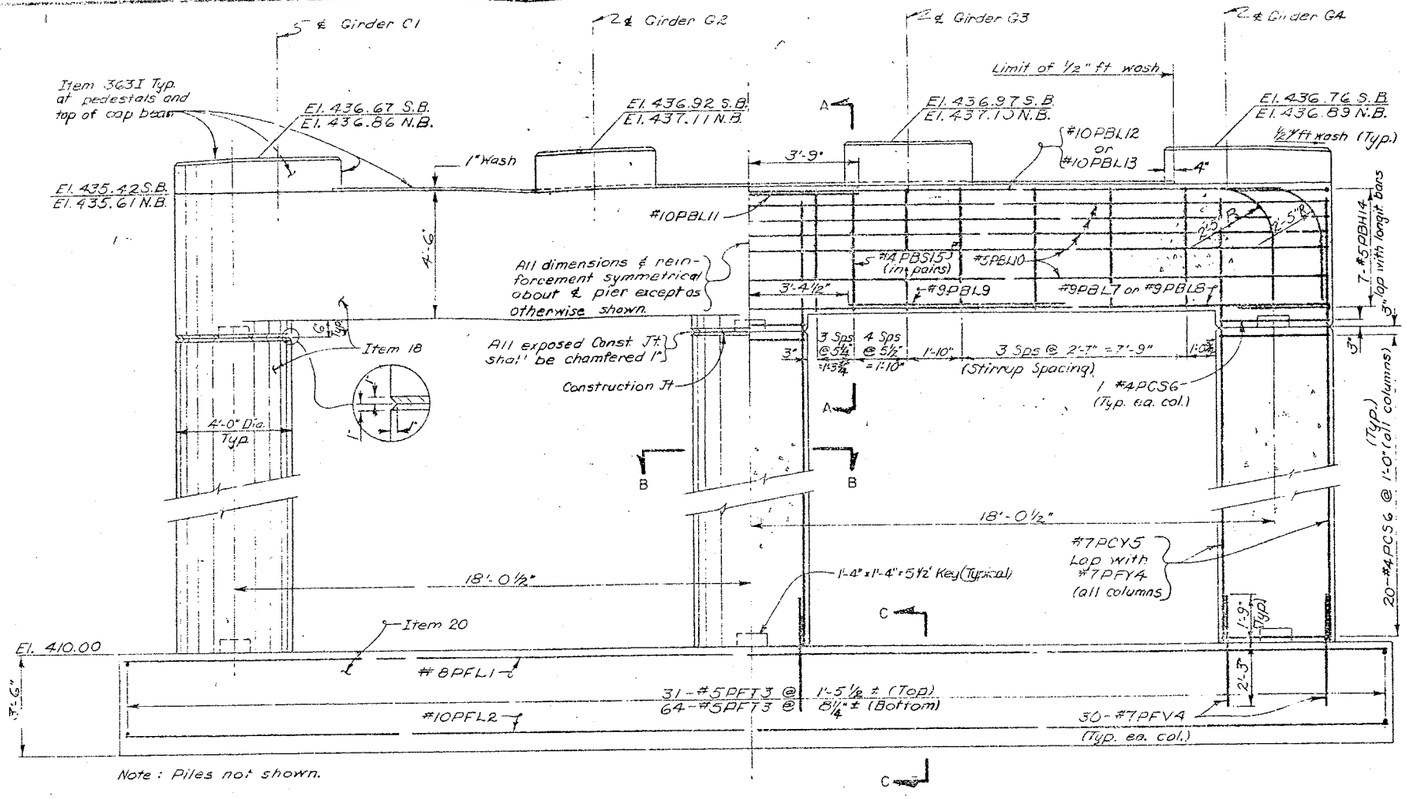

ELEVATION
Scale: 3/8" = 1'-0"

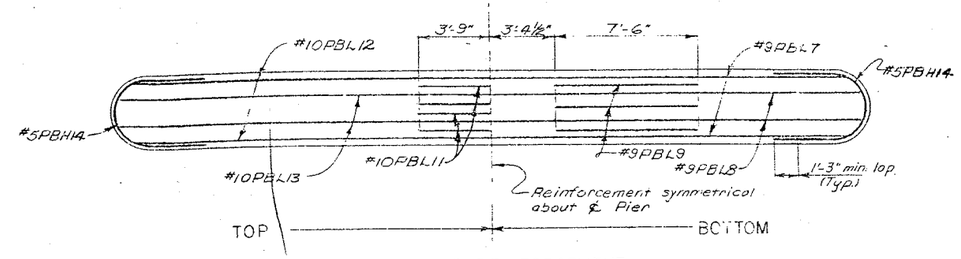

PIER CAP REINFORCEMENT
Scale: 1/4" = 1'-0"

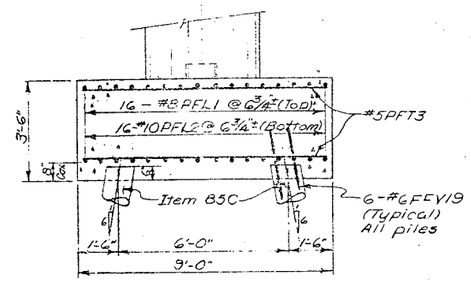

SECTION C-C
Scale: 3/8" = 1'-0"

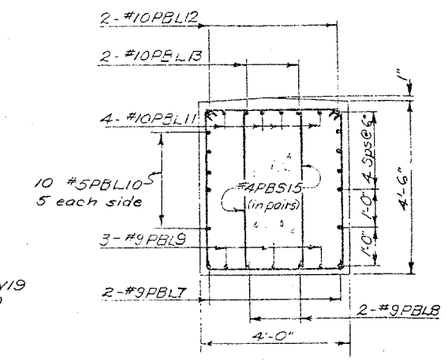

SECTION A-A
Scale: 1/2" = 1'-0"

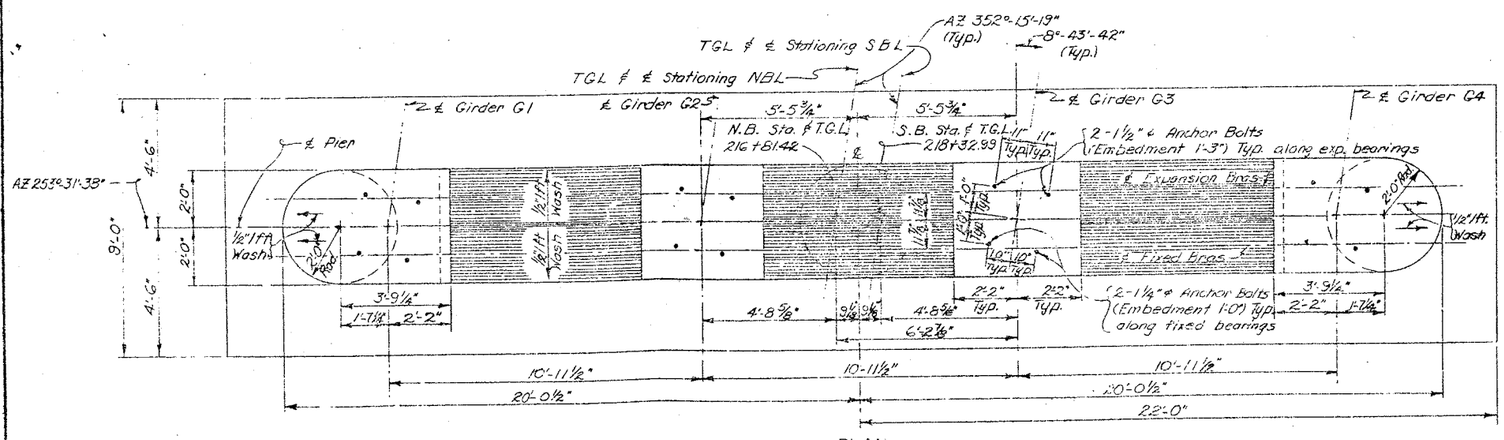

PLAN
Scale: 3/16" = 1'-0"

Indicates battered piles (6 on 1)

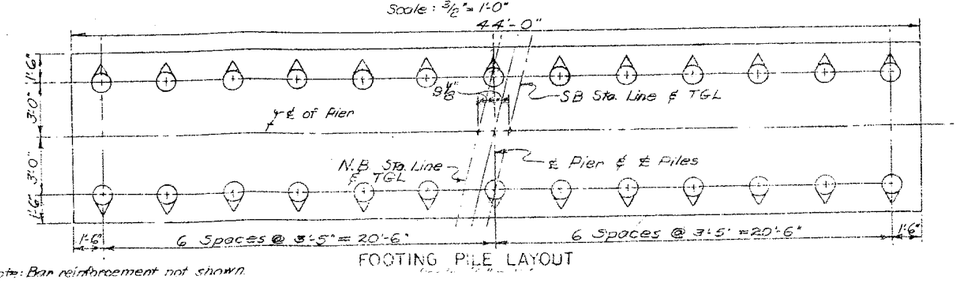

FOOTING PILE LAYOUT

Note: Bar reinforcement not shown.

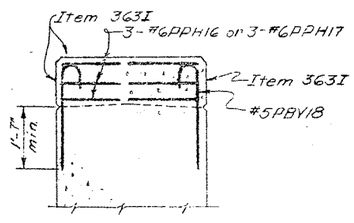

SECTION D-D
Scale: 1/2" = 1'-0"

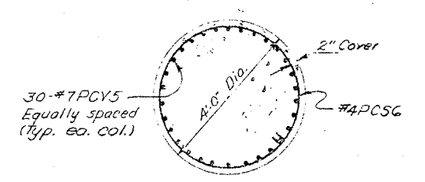

SECTION B-B
Scale: 1/2" = 1'-0"

Notes:
All footing reinforcement shall have a min. cover of 3" unless otherwise shown.
All other reinforcement shall have a min. cover of 2" unless otherwise shown.
Estimated length of cast-in-place concrete piles = 55' South bound and 65' North bound.
For design purposes the pile load does not exceed 35 tons per pile.
For details of pile reinforcement see Drawing No. 42

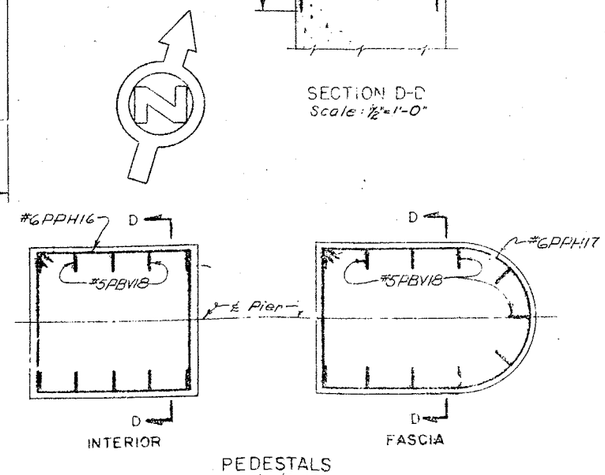

PEDESTALS
Scale: 1/2" = 1'-0"

PROJECT ENGINEER	R. L. Parker
IN CHARGE OF	F. Eckel
DESIGNED BY	N. A. Tolkes
DESIGN CHECKED BY	A. Thimble
DETAILED BY	J. T. Thorpe
DETAIL CHECKED BY	W. C. Stroud

BRIDGE NO. 2
INTERSTATE ROUTE 481 OVER DEWITT YARDS

PIER 1 (NB & SB)

DRAWING NO. 3 [illegible]

FED. RD. REG. NO.	STATE	FEDERAL AID PROJECT NO.	SHEET NO.	TOTAL SHEETS
1	NEW YORK	I-530-8(26) I-481-2(116)	188	309

INTERSTATE ROUTE CONNECTION 570
BETTERMENT IMPROVEMENTS (PHASE 2)
ONONDAGA COUNTY

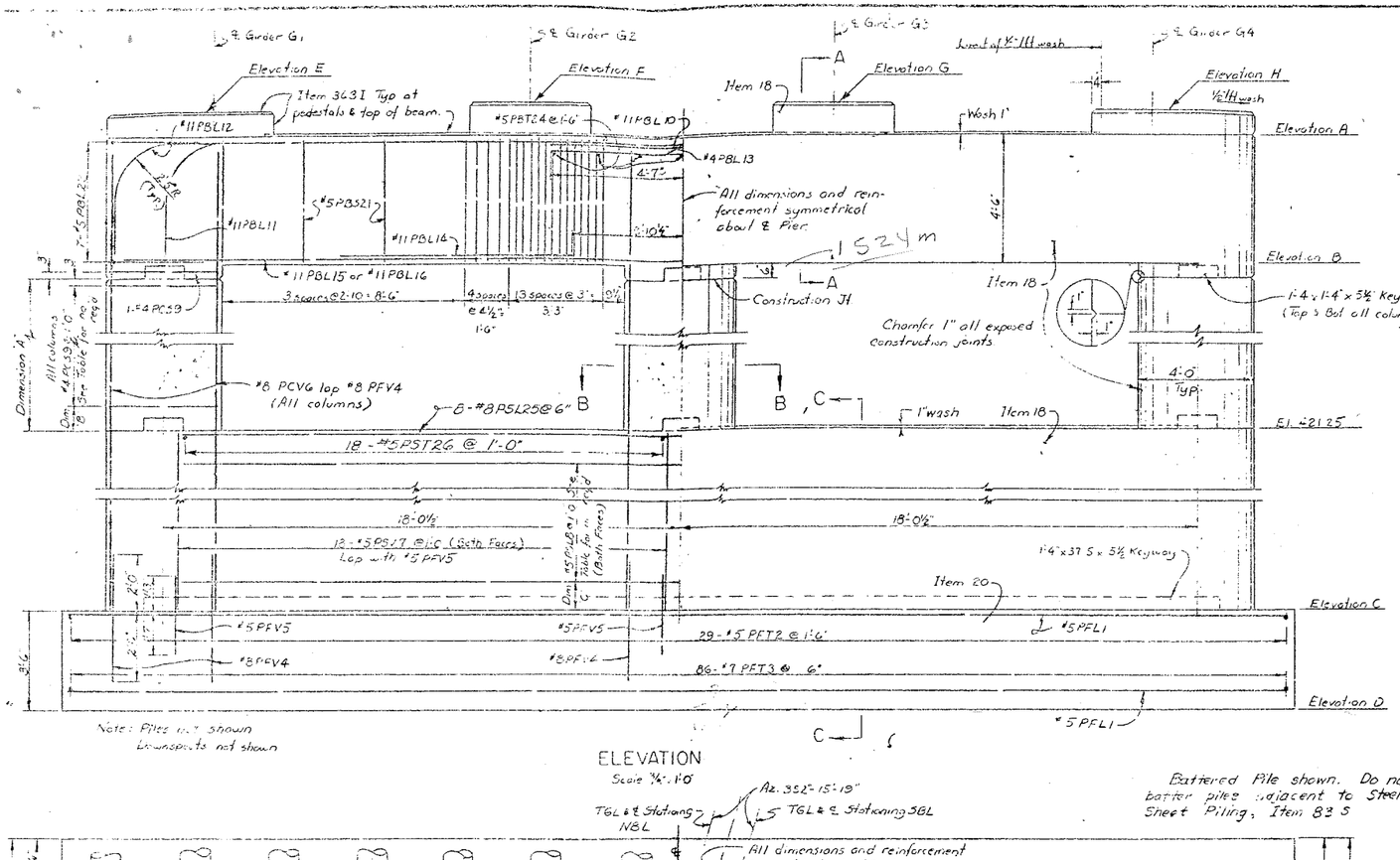

ELEVATION
Scale 3/16" = 1'-0"

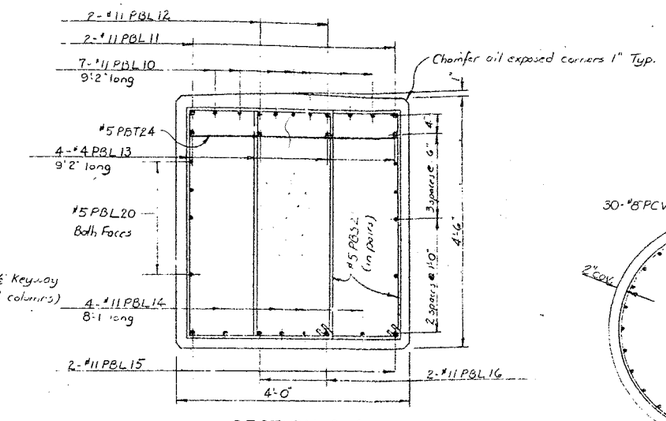

SECTION A-A
Scale 3/4" = 1'-0"

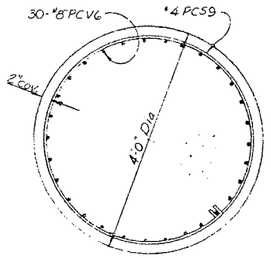

SECTION B-B
Scale 3/4" = 1'-0"

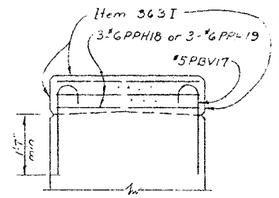

SECTION D-D
Scale 1/2" = 1'-0"

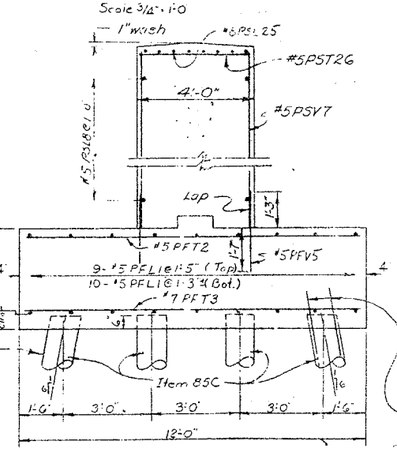

SECTION C C
Scale 3/8" = 1'-0"

Note All footing reinforcement shall have a min. cover of 3" unless otherwise shown.
All other reinforcement shall have a min cover of 2" unless otherwise shown.
Estimated length of cast-in-place concrete piles Pier #2 SB 55' long, Pier #2 NB & Pier #3 SB 60' long, Pier #3 NB 65' long, & Pier #4 NB & SB 70' long
For design purposes the pile load does not exceed 35 tons/pile.

Downspouts to be paid for under Item 13DE Each hopper to be drained by one downspout attached to each exterior column See drawing #32 for details

Battered Pile shown. Do not batter piles adjacent to Steel Sheet Piling, Item 83S

#6 FFV23 For details of pile reinforcement see Drawing No 42

STATION "A"	NBL	SBL
PIER 2	218+37.59	219+89.15
PIER 3	220+08.76	221+60.32
PIER 4	222+06.76	223+58.32

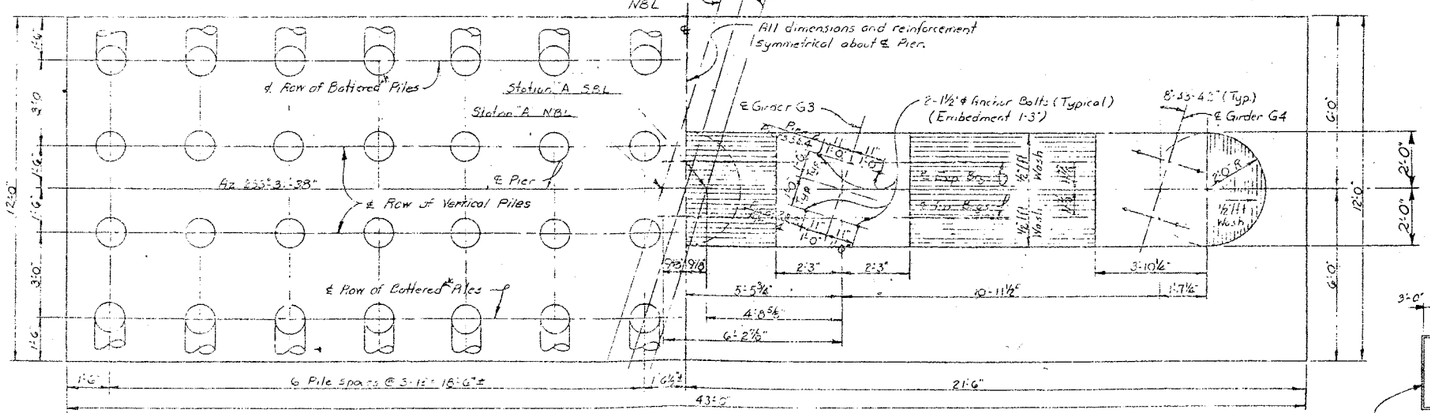

FOOTING PILE LAYOUT
Scale 3/8" = 1'-0"

* Piles adjacent to Steel Sheet Piling shall not be battered.

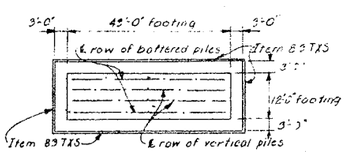

PIERS 3 SB & 3 NB

PIER DATA

DESCRIPTION	NORTHBOUND PIER 2	NORTHBOUND PIER 3	NORTHBOUND PIER 4	SOUTHBOUND PIER 2	SOUTHBOUND PIER 3	SOUTHBOUND PIER 4
ELEVATION A	437.00	438.00	438.50	437.00	438.00	438.50
" B	432.50	433.50	434.00	432.50	433.50	434.00
" C	411.00	413.00	412.80	411.00	413.00	412.80
" D	407.50	409.50	409.30	407.50	409.50	409.30
" E	438.42	439.47	439.83	438.28	439.38	439.80
" F	438.66	439.70	440.09	438.52	439.61	440.05
" G	438.64	439.68	440.04	438.56	439.65	440.08
" H	438.43	439.46	439.79	438.35	439.43	439.83
DIM A	10.75'	11.75'	12.25'	10.75'	11.75'	12.25'
" B	6"	6"	1'-0"	6"	6	1'-0"
NO. PCS9 per col.	12	13	13	12	13	13
DIM C	1'-0"	1'-0"	3"	1'-0"	1'-0"	3"
NO. PSL8 per pier	20	16	18	20	16	18

For details of Steel Sheet Piling, Item 83S, see Drawing No 4.

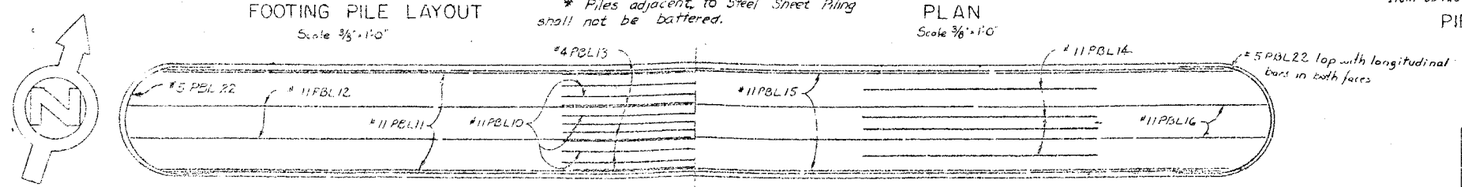

Reinforcement symmetrical about ℄ Pier

TOP — BOTTOM

PIER CAP REINFORCEMENT
Scale 3/8" = 1'-0"

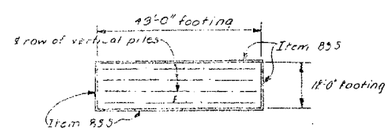

PIERS 2 & 4 SB, 2 & 4 NB

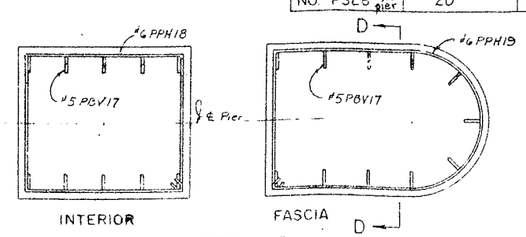

INTERIOR FASCIA

PEDESTALS
Scale 1/2" = 1'-0"

PROJECT ENGINEER	[illegible]
IN CHARGE OF	[illegible]
DESIGNED BY	[illegible]
DESIGN CHECKED BY	[illegible]
DETAILED BY	[illegible]
DETAIL CHECKED BY	[illegible]

BRIDGE NO. 2
INTERSTATE ROUTE 481 OVER DEWITT YARDS

PIERS #2, #3, #4 (NB & SB)

DRAWING NO. 10 OF 30

FED. RD. REG. NO.	STATE	FEDERAL AID PROJECT NO.	SHEET NO.	TOTAL SHEETS
	NEW YORK	I-681-2(116)	189	309

INTERSTATE ROUTE CONNECTION 570
RUTTSHUT INTERCHANGE (PHASE 2)
ONONDAGA COUNTY

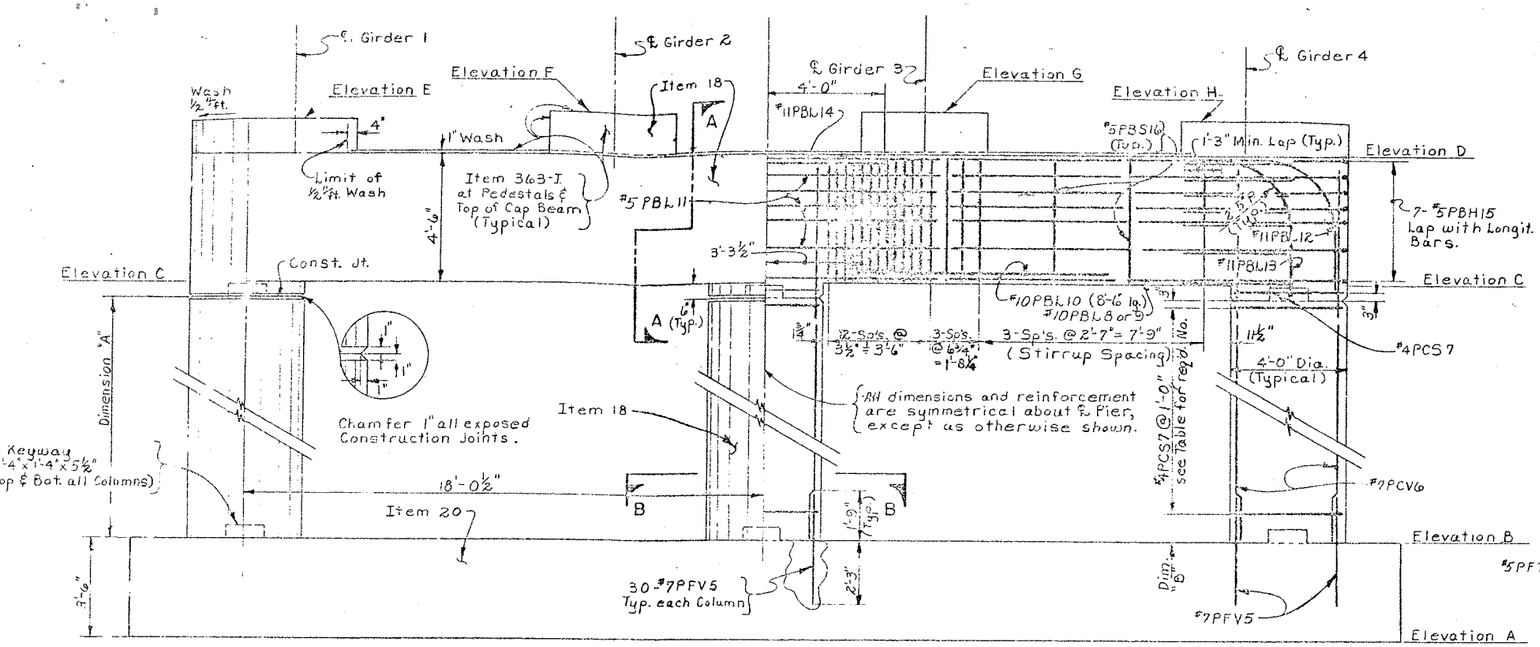

Notes:

Piles and Downspouts not shown.
Footing reinforcement not shown.

ELEVATION
Scale: ⅜"=1'-0"

Notes:

All footing reinforcement shall have a minimum cover of 3" unless otherwise shown.

All other reinforcement shall have a minimum cover of 2" unless otherwise shown.

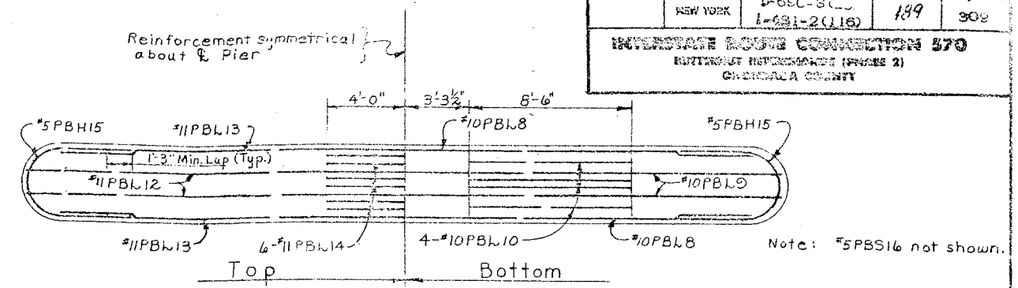

Note: #5PBS16 not shown.

PIER CAP REINFORCEMENT
Scale: ¼"=1'-0"

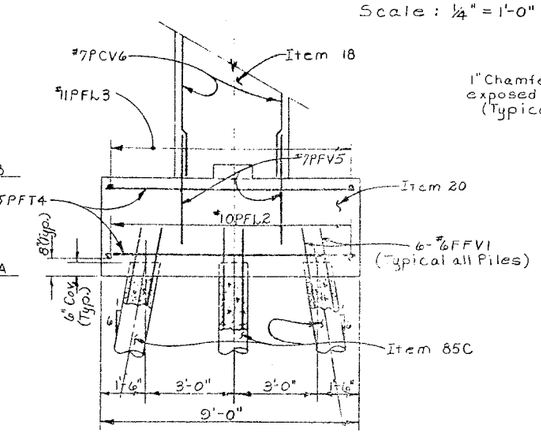

END SECTION
Scale: ⅜"=1'-0"

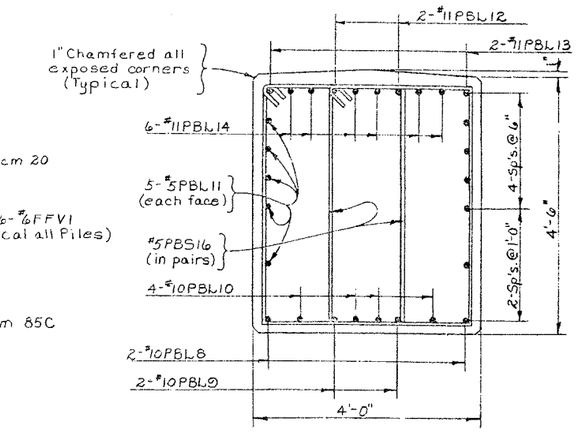

SECTION A-A
Scale: ¾"=1'-0"

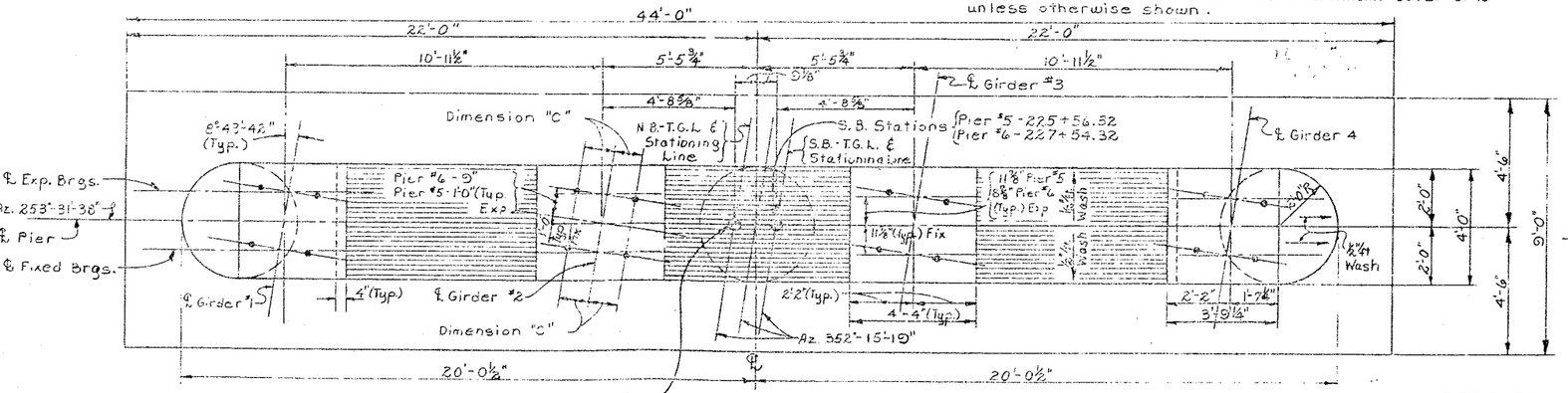

PLAN
Scale: ⅜"=1'-0"

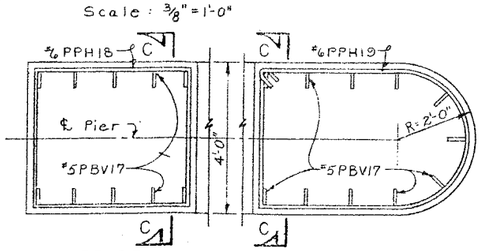

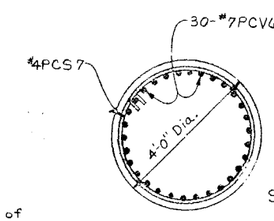

SECTION B-B
Scale: ½"=1'-0"

PEDESTAL REINFORCEMENT
Scale: ½"=1'-0"

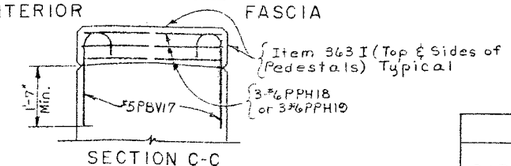

SECTION C-C

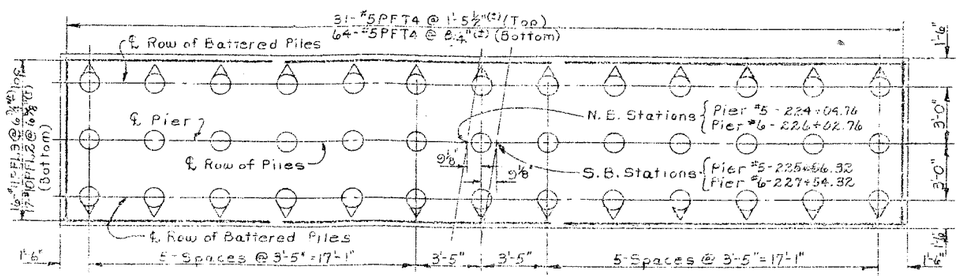

FOOTING REINFORCEMENT PLAN & PILE LAYOUT
Scale: ¼"=1'-0"

Note:

For Design Purposes the pile load does not exceed 85 Tons per Pile.

Indicates Piles Battered 6 on 1

Estimated length of Cast-in-Place Piles:

Pier #5 S.B. = 75'
Pier #5 N.B. = 60'
Pier #6 S.B. = 80'
Pier #6 N.B. = 80'

PIER DATA

DESCRIPTION	PIER No. 5 N.B.	PIER No. 5 S.B.	PIER No. 6 N.B.	PIER No. 6 S.B.
ELEVATION A	409.30	409.30	410.50	407.30
" " B	412.80	412.80	414.00	410.80
" " C	433.45	433.55	431.96	432.12
" " D	437.95	436.05	436.46	436.62
" " E	439.26	439.30	437.79	437.88
" " F	439.50	439.54	438.00	438.10
" " G	439.46	439.56	437.95	438.11
" " H	439.20	439.30	437.71	437.87
DIM. A	20'-2"	20'-3"	17'-5½"	20'-10"
DIM. B	11"	1'-0"	3"	7"
NO. HOOPS	21	21	19	22

ANCHOR BOLT DATA

GIRDER		PIER NO. 5 S.B. & N.B. ϕ BOLT	REQ'D. EMBED.	DIM. C	PIER NO. 6 N.B. & S.B. ϕ BOLT	REQ'D. EMBED.	DIM. C
FIXED BRGS.	G1	1½"	1'-3"	1'-0"	1½"	1'-3"	1'-0"
	G2	1½"	1'-3"	1'-0"	1½"	1'-3"	1'-0"
	G3	1½"	1'-3"	1'-0"	1½"	1'-3"	1'-0"
	G4	1½"	1'-3"	1'-0"	1½"	1'-3"	1'-0"
EXP BRGS.	G1	1½"	1'-3"	1'-0"	1½"	1'-3"	1'-0"
	G2	1½"	1'-3"	1'-0"	1¼"	1'-0"	10"
	G3	1½"	1'-3"	1'-0"	1¼"	1'-0"	10"
	G4	1½"	1'-3"	1'-0"	1½"	1'-3"	1'-0"

BRIDGE NO. 2
INTERSTATE ROUTE 481 OVER DEWITT YARDS

PIERS 5 & 6 (N.B. & S.B.)

DRAWING NO. 11 OF 50

PROJECT ENGINEER P. Parker
CHARGE OF I. Eckel
DESIGNED BY J. D. Tumbas
DESIGN CHECKED BY N. Toppuzis
DETAILED BY J. C. Thompson
DETAIL CHECKED BY W. J. Speed

FED. RD. REG. NO.	STATE	FEDERAL AID PROJECT NO.	SHEET NO.	TOTAL SHEETS
1	NEW YORK	I-680-3(28) I-481-2(116)	170	570

BRIDGE NO. 2 OVER DEWITT YARDS (RAMP 2)
ONONDAGA COUNTY

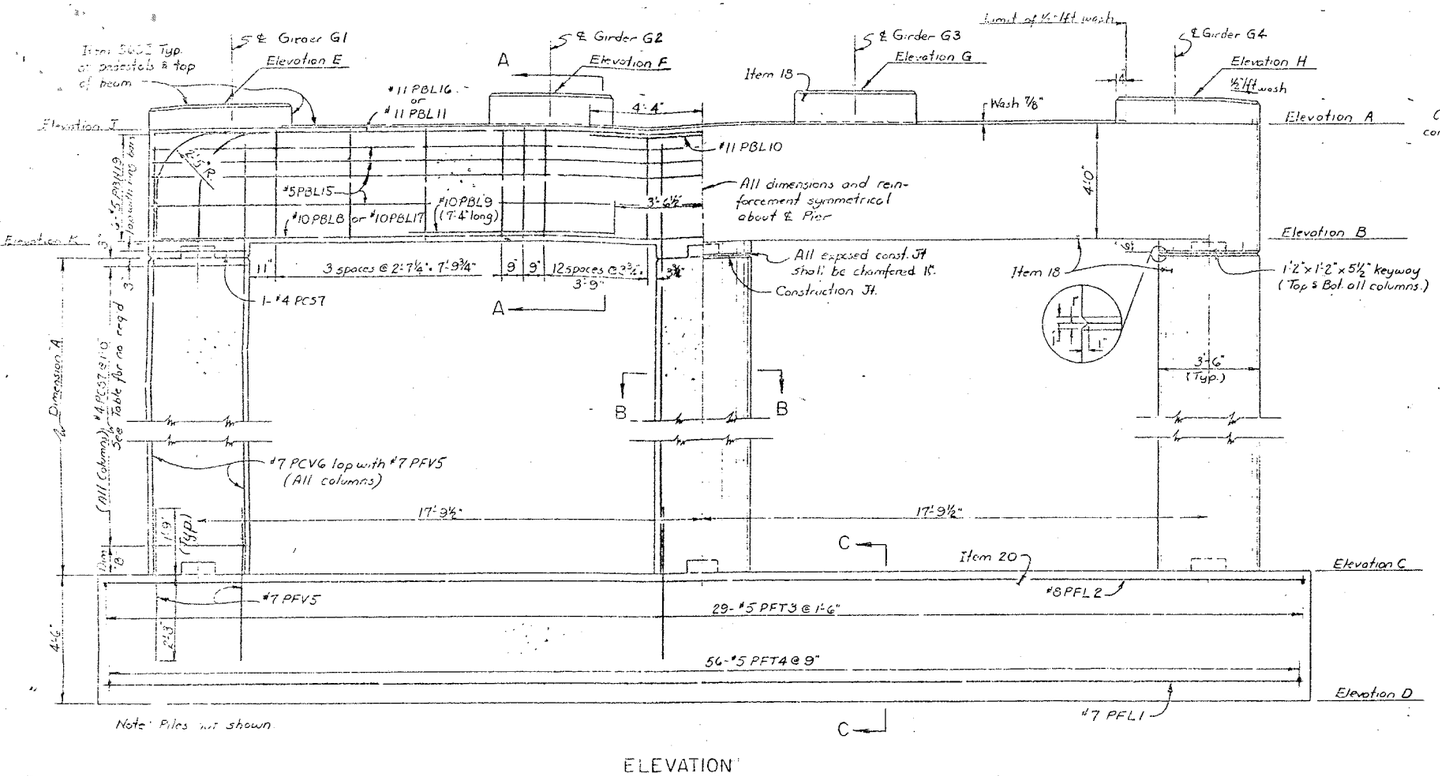

ELEVATION
Scale 3/8" = 1'-0"

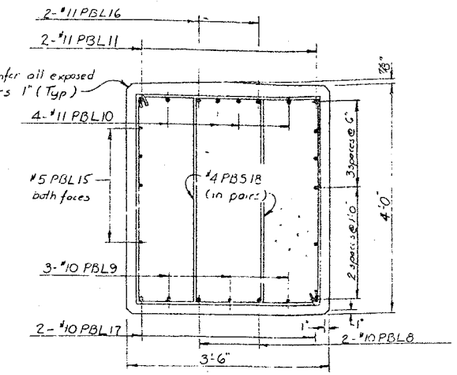

SECTION A-A
Scale 3/4" = 1'-0"

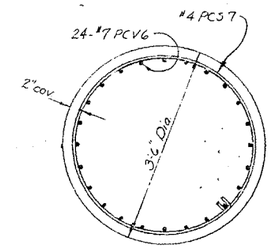

SECTION B-B
Scale 3/4" = 1'-0"

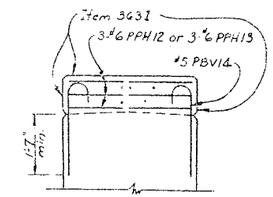

SECTION D-D
Scale ½" = 1'-0"

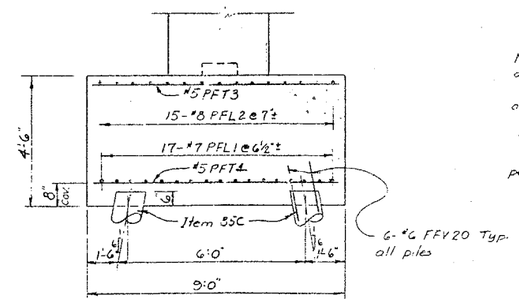

SECTION C-C
Scale 3/8" = 1'-0"

Note. All footing reinforcement shall have a min. cover of 3" unless otherwise shown.
All other reinforcement shall have a min. cover of 2" unless otherwise shown.
Estimated length of cast-in-place concrete piles = 80' at Pier 7 NB & SB, 70' at Pier 8 NB & SB and Pier 9 NB
For design purposes the pile load does not exceed 35 tons per pile.

For details of pile reinforcement see Drawing No. 42

STATION "A"

	NBL	SBL
PIER 7	227+26.76	228+78.32
PIER 8	228+50.76	230+02.32
PIER 9	229+74.76	

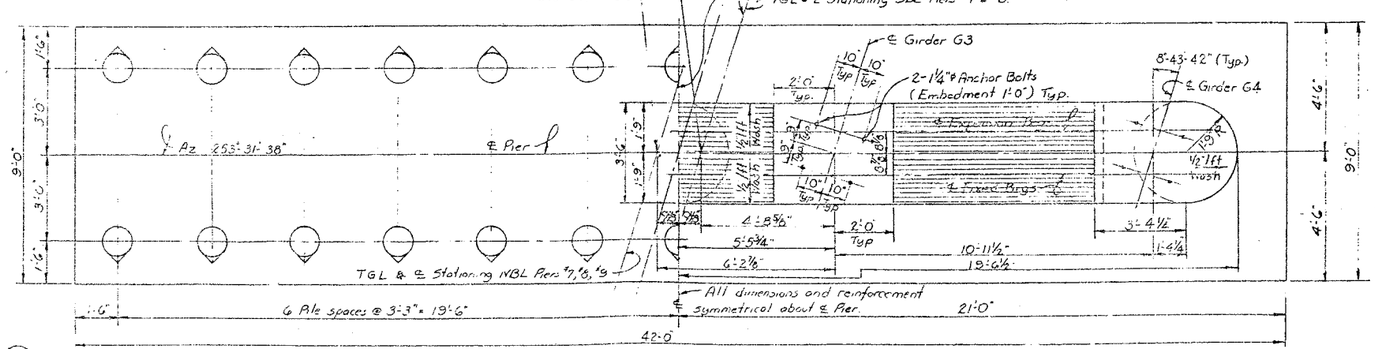

Indicates battered piles. (4 on 11)

FOOTING PILE LAYOUT
Scale 3/8" = 1'-0"

PLAN
Scale 3/8" = 1'-0"

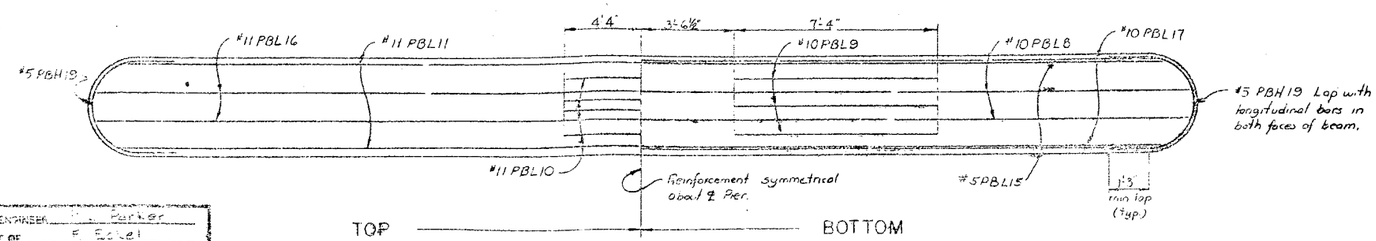

PIER CAP REINFORCEMENT
Scale 3/8" = 1'-0"

PIER DATA

DESCRIPTION	NORTHBOUND PIER 7	NORTHBOUND PIER 8	NORTHBOUND PIER 9	SOUTHBOUND PIER 7	SOUTHBOUND PIER 8
ELEVATION A	438.29	436.51	434.36	438.49	436.74
" B	434.29	432.51	430.36	434.49	432.74
" C	410.00	408.80	407.70	409.00	408.00
" D	405.50	404.30	403.20	404.50	403.50
" E	439.39	437.62	435.69	439.52	437.79
" F	439.59	437.82	435.74	439.73	437.99
" G	439.54	437.76	435.62	439.74	438.00
" H	439.29	437.51	435.36	439.49	437.74
DIM A	23.79	23.21	22.16	24.99	24.24
" B	6½"	11½"	11"	9"	1'-0"
NO. HOOPS	24	23	22	25	24
ELEVATION J	438.29	436.51	434.69	438.49	436.74
ELEVATION K	434.29	432.51	430.69	434.49	432.74

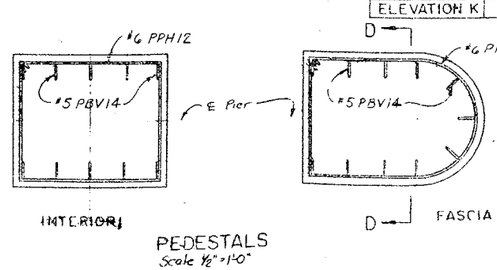

PEDESTALS
Scale 1/2" = 1'-0"

BRIDGE NO. 2
INTERSTATE ROUTE 481 OVER DEWITT YARDS

PIERS 7 & 8 NBL & SBL, PIER 9 NBL
DRAWING NO. 12 OF 50

PROJECT ENGINEER: L. Parker
IN CHARGE OF: F. Fogel
DESIGNED BY: E. Howe
DESIGN CHECKED BY: L. A. Torres
DETAILED BY: [illegible]
DETAIL CHECKED BY: S. Pierce

FED. RD. REG. NO.	STATE	FEDERAL AID PROJECT NO.	SHEET NO.	TOTAL SHEETS
1	NEW YORK	I-090-8(28) I-431-2(116)	191	309

INTERSTATE ROUTE CONSTRUCTION 570
BITTERCUT INTERCHANGE (PHASE 2)
ONONDAGA COUNTY

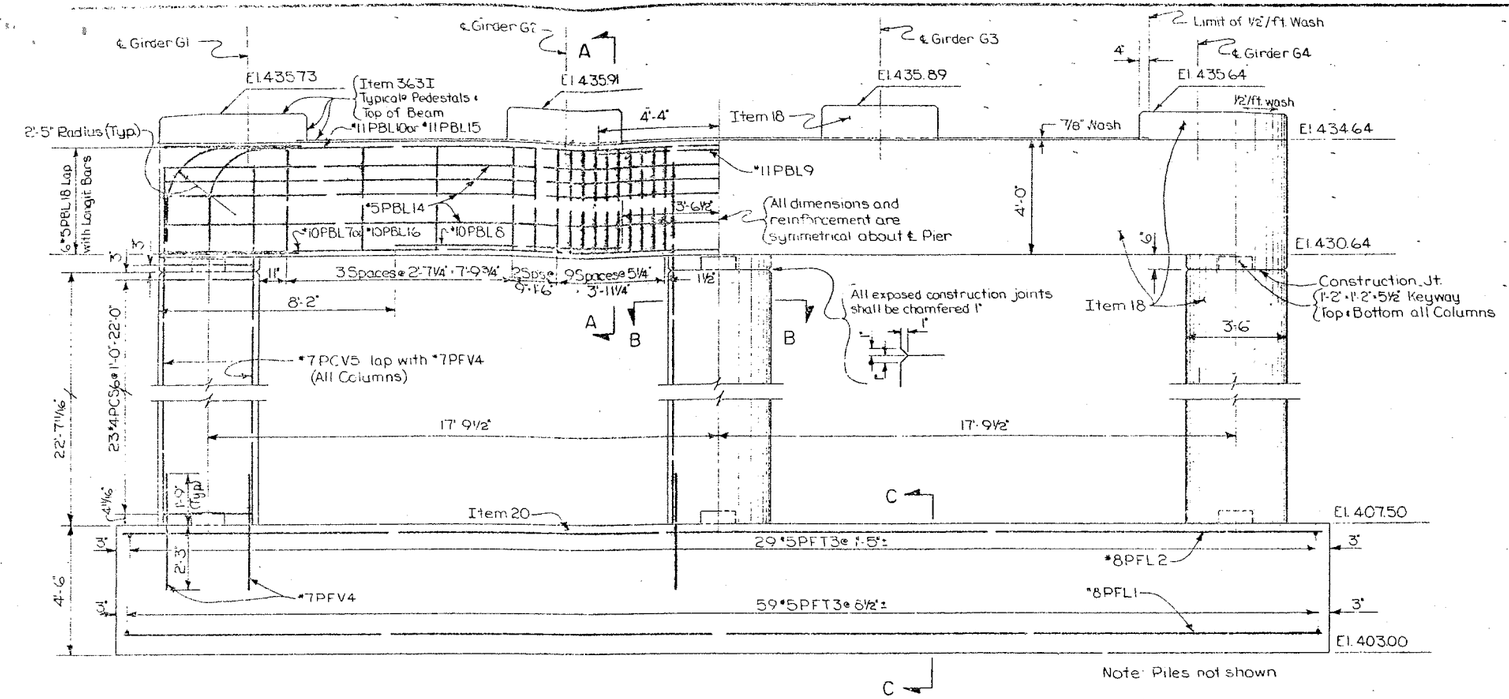

ELEVATION
Scale: 3/8" = 1'-0"

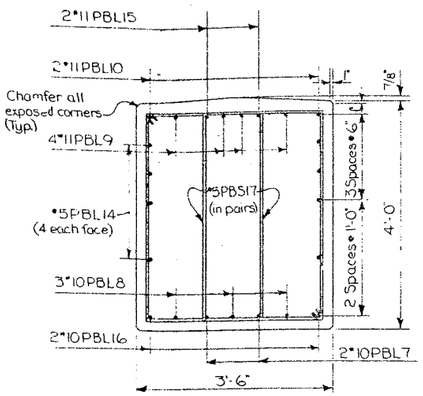

SECTION A-A
Scale: 3/4" = 1'-0"

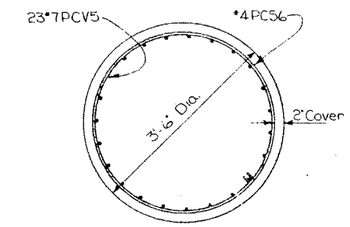

SECTION B-B
Scale: 3/4" = 1'-0"

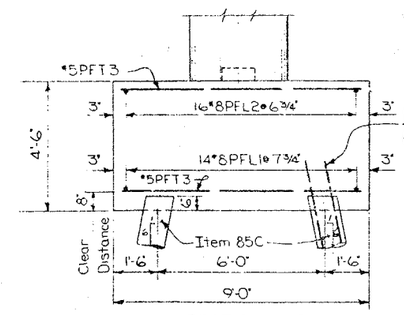

SECTION C-C
Scale: 3/8" = 1'-0"

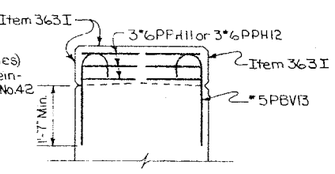

SECTION D-D
Scale: 1/2" = 1'-0"

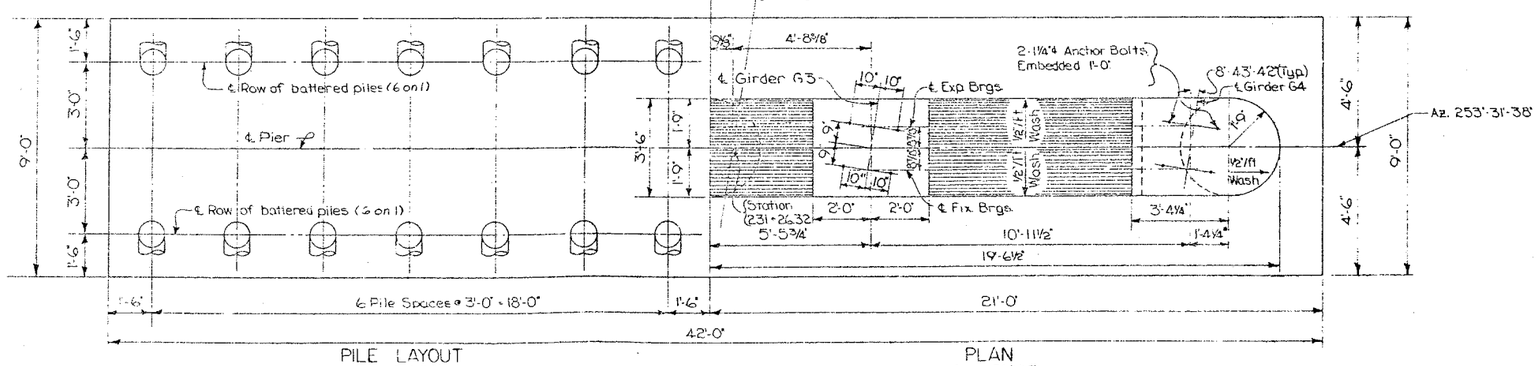

PILE LAYOUT
Scale: 3/8" = 1'-0"

PLAN
Scale: 3/8" = 1'-0"

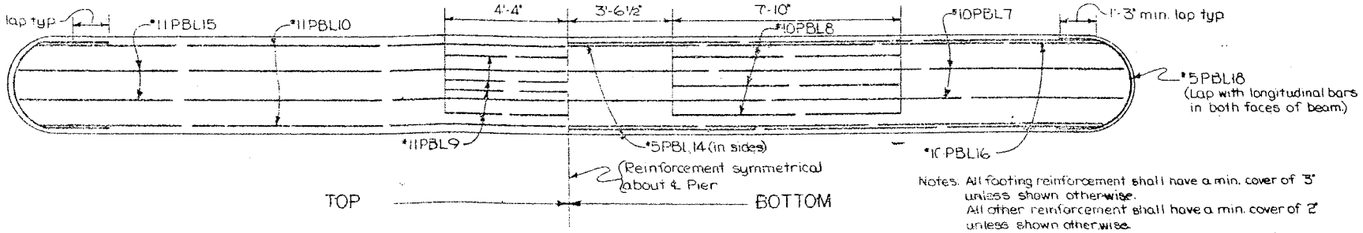

PIER CAP REINFORCEMENT
Scale: 3/8" = 1'-0"

Notes. All footing reinforcement shall have a min. cover of 3" unless shown otherwise.
All other reinforcement shall have a min. cover of 2" unless shown otherwise.
Estimated length of concrete cast-in-place piles = 70'. For design purposes the pile load does not exceed 35 tons per pile.

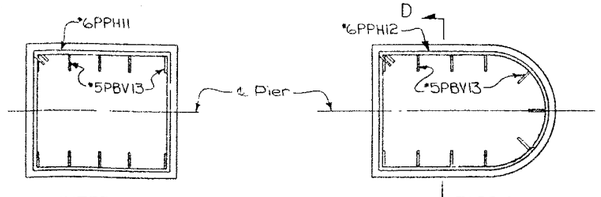

INTERIOR

PEDESTALS
Scale: 1/2" = 1'-0"

PROJECT ENGINEER E. L. Parker
IN CHARGE OF F. Eckel
DESIGNED BY S. Rowe
DESIGN CHECKED BY N. A. Toppres
DETAILED BY J. Darcy
DETAIL CHECKED BY S. Rowe

BRIDGE NO. 2
INTERSTATE ROUTE 481 OVER DEWITT YARDS

PIER 9 (SB)

DRAWING NO. 13 OF 50

FED. RD. REG. NO.	STATE	FEDERAL AID PROJECT NO.	SHEET NO.	TOTAL SHEETS
1	NEW YORK	F-690-3(28) 481-2(116)	192	309

INTERSTATE ROUTE CONNECTION 570
BUFFERNUT INTERCHANGE (PHASE 2)
ONONDAGA COUNTY

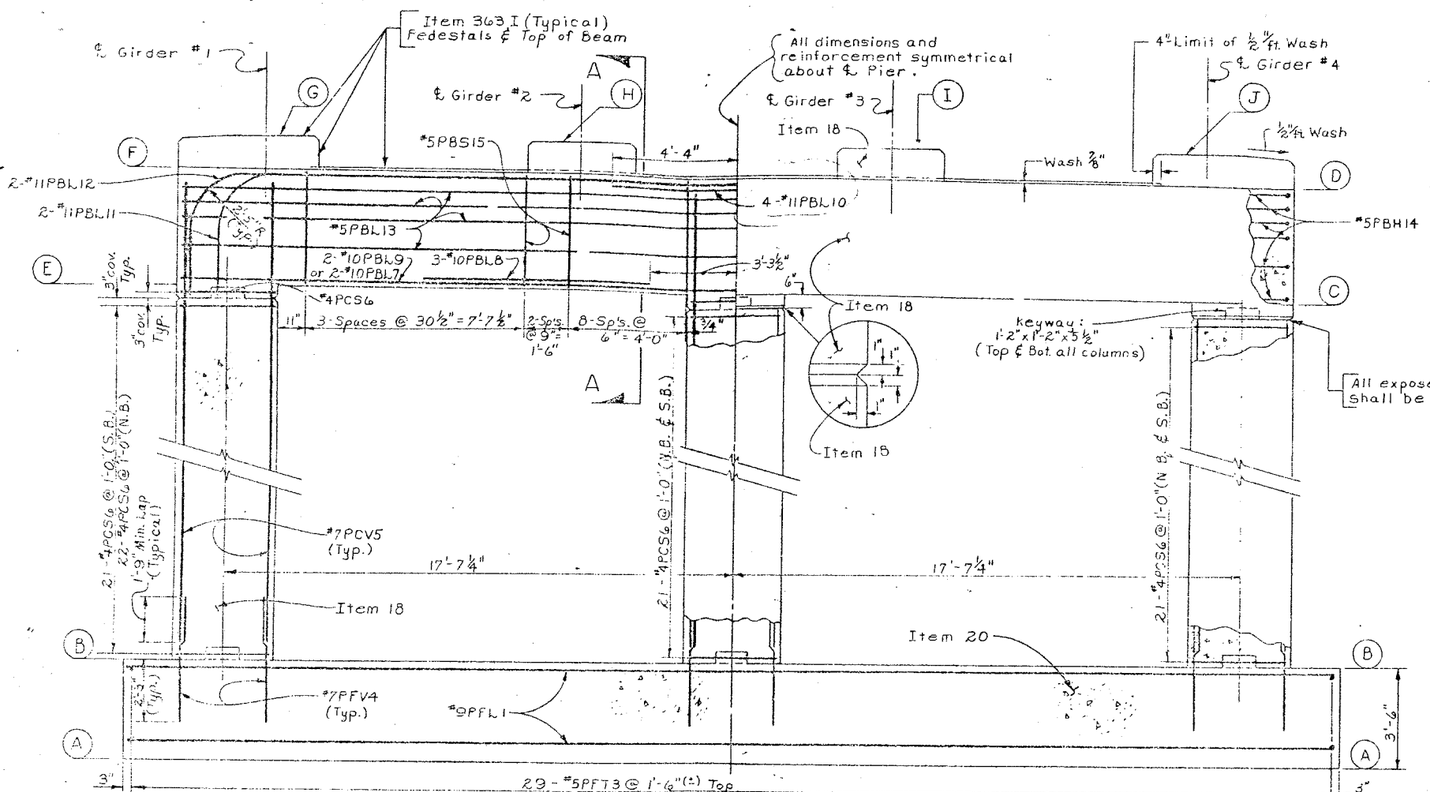

ELEVATION
Scale: ⅜" = 1'-0"

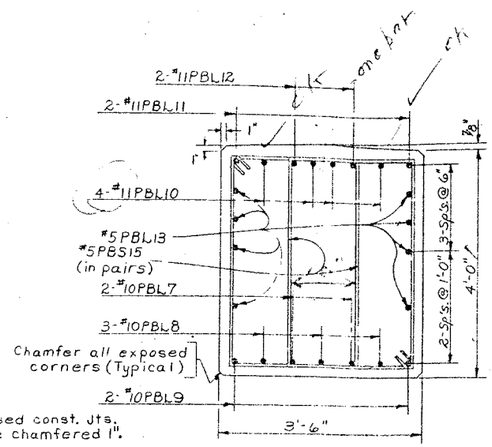

SECTION A-A
Scale: ¾" = 1'-0"

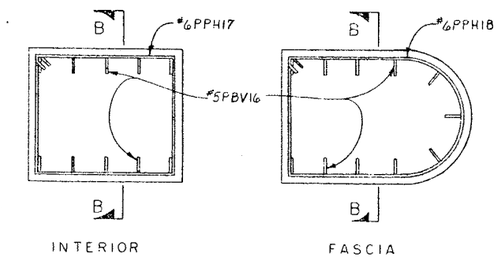

PEDESTAL REINFORCEMENT
Scale: ½" = 1'-0"

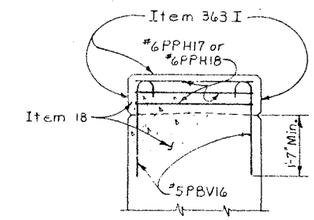

SECTION B-B
Scale: ½" = 1'-0"

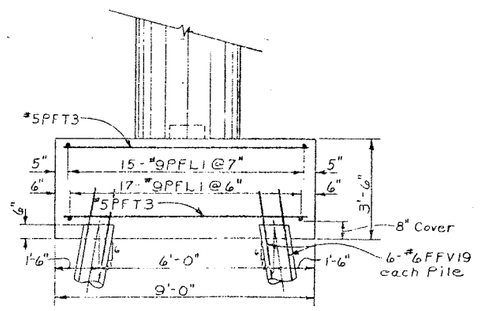

END VIEW
Scale: ⅜" = 1'-0"

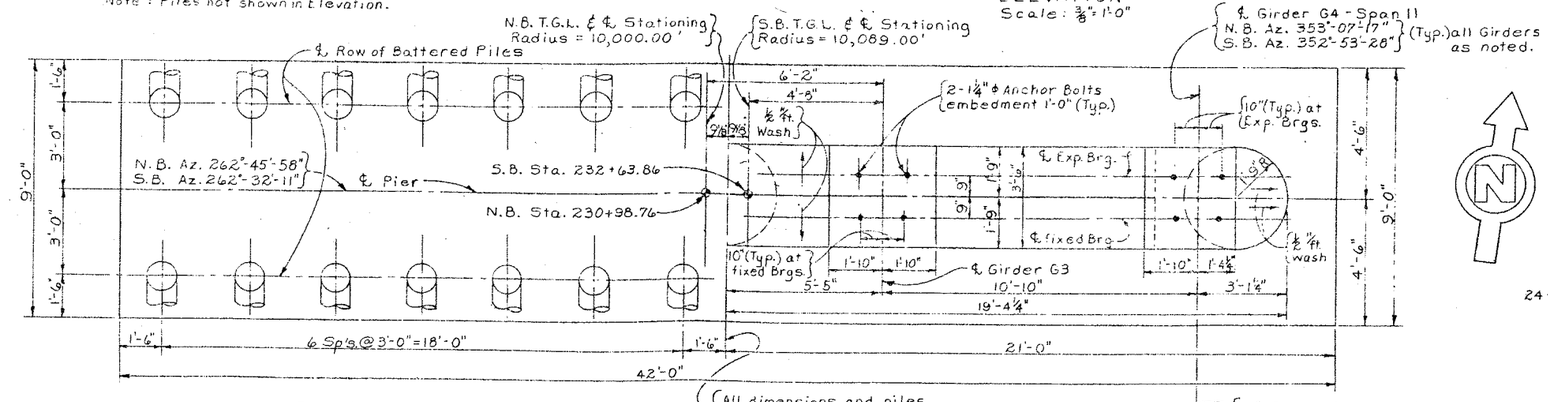

PILE LAYOUT
Scale: ⅜" = 1'-0"

PLAN
Scale: ⅜" = 1'-0"

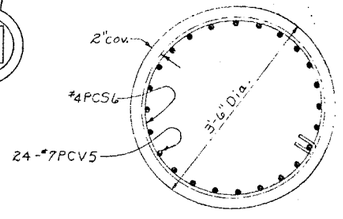

TYPICAL COLUMN SECTION
Scale: ¾" = 1'-0"

Notes:
All footing reinforcement shall have a min. cover of 3" unless otherwise shown.
All other reinforcement shall have a min. cover of 2" unless otherwise shown.
Estimated length of Cast-in-Place concrete piles = 70'-0" S.B. & 65'-0" N.B.
For Design Purposes the pile load does not exceed 35 Tons per Pile.
For details of Cast-in-Place Piles see Dwg. #42.

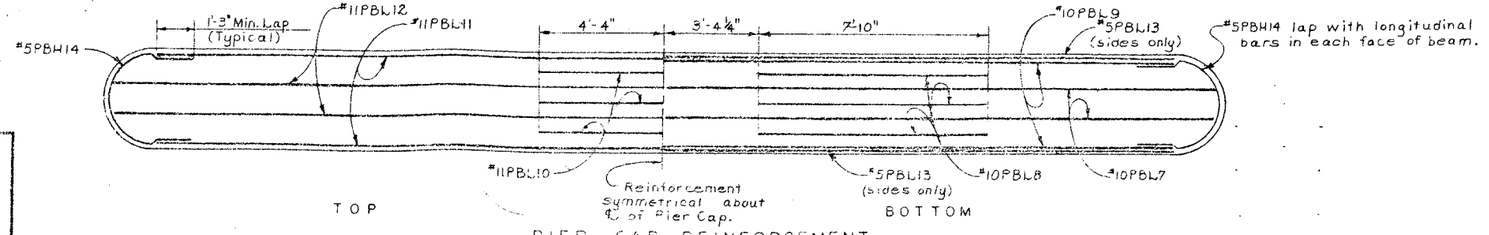

PIER CAP REINFORCEMENT

ELEVATIONS		
LOCATION	SOUTHBOUND	NORTHBOUND
A	403.20	403.00
B	406.70	406.50
C	427.85	427.83
D	431.85	431.83
E	428.35	428.48
F	432.35	432.48
G	433.42	433.55
H	433.31	433.35
I	433.15	433.13
J	432.92	432.91

BRIDGE NO. 2
INTERSTATE ROUTE 481 OVER DEWITT YARDS

PIER 10 (SB & NB)

PROJECT ENGINEER R. Parker
CHARGE OF F. Eckel
DESIGNED BY S. Rowe
DESIGN CHECKED BY N. A. Toppses
DETAILED BY J.C. Thompson
DETAIL CHECKED BY [illegible]

FED. RD. REG. NO.	STATE	FEDERAL AID PROJECT NO.	SHEET NO.	TOTAL SHEETS
1	NEW YORK	I-690-3(28) I-481-2(116)	193	309

INTERSTATE ROUTE CONNECTION 570
BUTTERNUT INTERCHANGE (PHASE 2)
ONONDAGA COUNTY

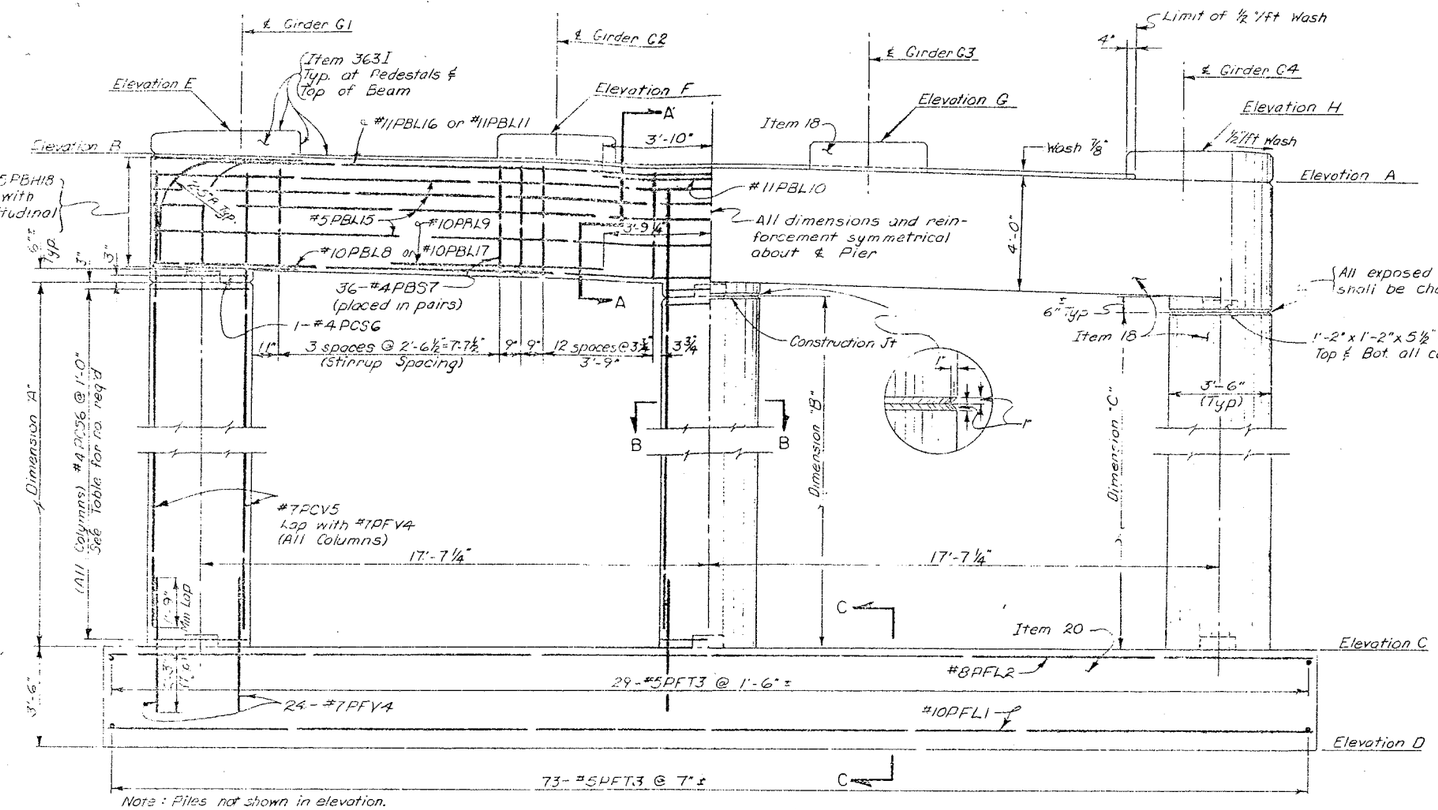

Note: Piles not shown in elevation.

ELEVATION
Scale: 3/16" = 1'-0"

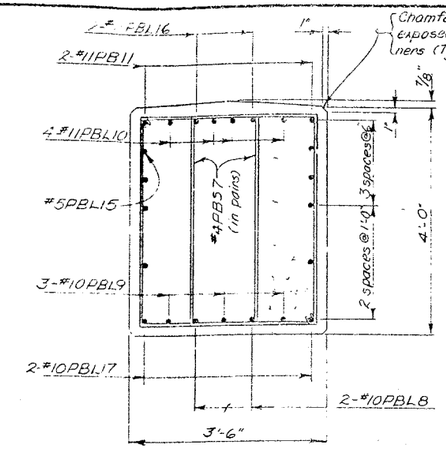

SECTION A-A
Scale: 3/4" = 1'-0"

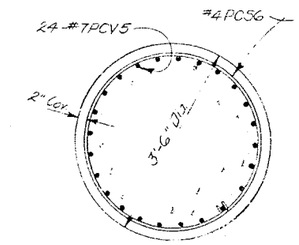

SECTION B-B
Scale: 3/4" = 1'-0"
Typical all columns

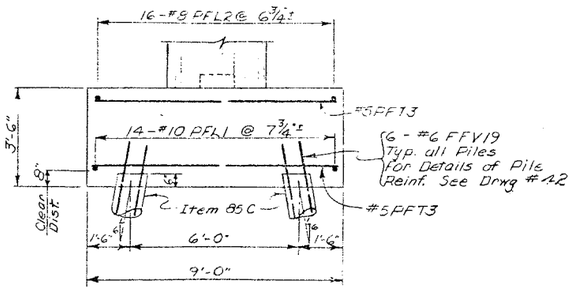

SECTION C-C
Scale: 3/8" = 1'-0"

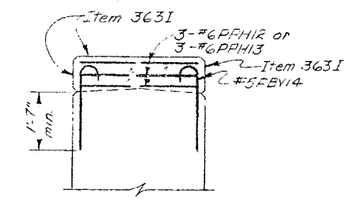

SECTION D-D
Scale: ½" = 1'-0"

Note: All footing reinforcement shall have a min. cover of 3" unless otherwise shown.
All other reinforcement shall have a min. cover of 2" unless otherwise shown.
Estimated length of Cast-In-Place Concrete Piles = 65' at Piers 11 & 12 NB & SB.
For design purposes the Pile Load does not exceed 35 Tons Per Pile.

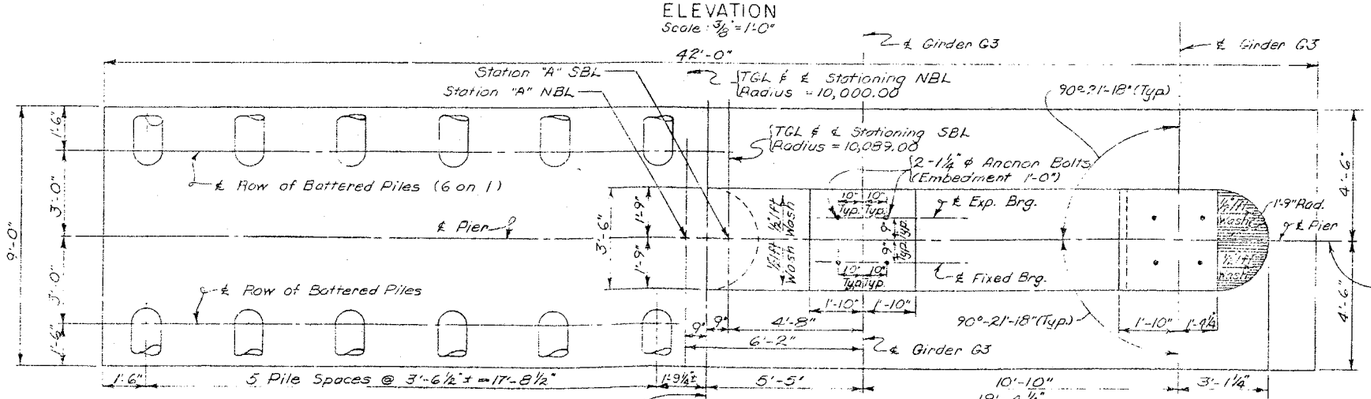

FOOTING PILE LAYOUT
Scale: 3/8" = 1'-0"

(All dimensions & reinforcement symmetrical about ℄ Pier

PLAN
Scale: 3/16" = 1'-0"

Pier 11 NB AZ 263°-28'-36"
Pier 12 NB AZ 263°-11'-13"
Pier 11 SB AZ 263°-14'-46"
Pier 12 SB AZ 263°-57'-22"

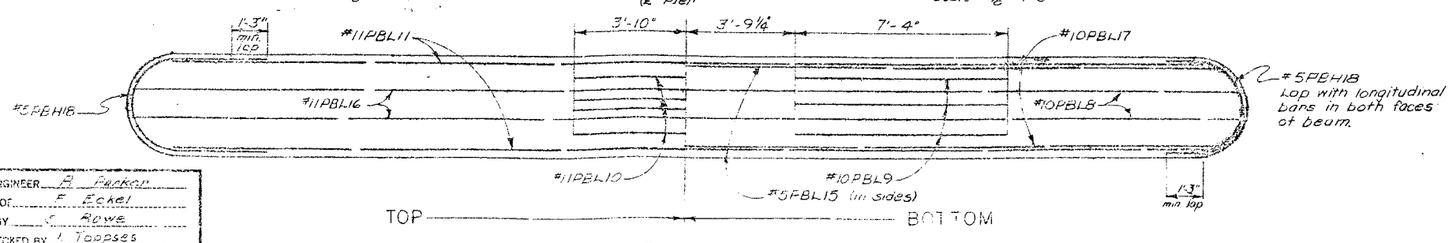

PIER CAP REINFORCEMENT
Scale: 3/8" = 1'-0"

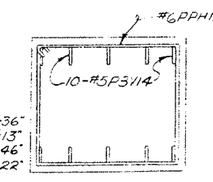

INTERIOR

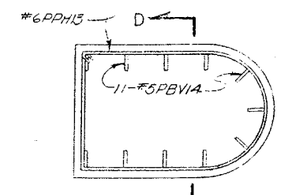

FASCIA

PEDESTALS
Scale: ½" = 1'-0"

PIER DATA

DESCRIPTION	NORTHBOUND		SOUTHBOUND	
	PIER 11	PIER 12	PIER 11	PIER 12
ELEVATION A	429.04	425.81	429.03	425.77
" B	429.72	426.49	429.71	426.44
" C	406.30	406.40	406.30	406.40
" D	402.80	402.90	402.80	402.90
" E	430.72	427.49	430.71	427.45
" F	430.49	427.26	430.48	427.22
" G	430.27	427.04	430.26	427.00
" H	430.04	426.81	430.03	426.77
DIM "A"	18.92	15.59	18.91	15.54
"B"	18.58	15.25	18.57	15.21
"C"	18.24	14.91	18.23	14.87
NO. HOOPS	19 Per Col.	16 Per Col.	19 Per Col.	16 Per Col.
STATION "A"	232+22.76	233+46.76	233+88.86	235+13.86

PROJECT ENGINEER R. Parker
CHARGE OF F. Eckel
DESIGNED BY K. Rowe
DESIGN CHECKED BY L. Toppses
DETAILED BY J. Duncant
DETAIL CHECKED BY [illegible]

BRIDGE NO. 2
INTERSTATE ROUTE 481 OVER DEWITT YARDS

PIERS 11 & 12 (N.B. & S.B.)

DRAWING NO. 15 OF 50

FED. RD. REG. NO.	STATE	FEDERAL AID PROJECT NO.	SHEET NO.	TOTAL SHEETS
1	NEW YORK	I-590-3(28) I-481-2(116)	194	309

INTERSTATE ROUTE CONNECTION 570
BUTTERNUT INTERCHANGE (PHASE 2)
ONONDAGA COUNTY

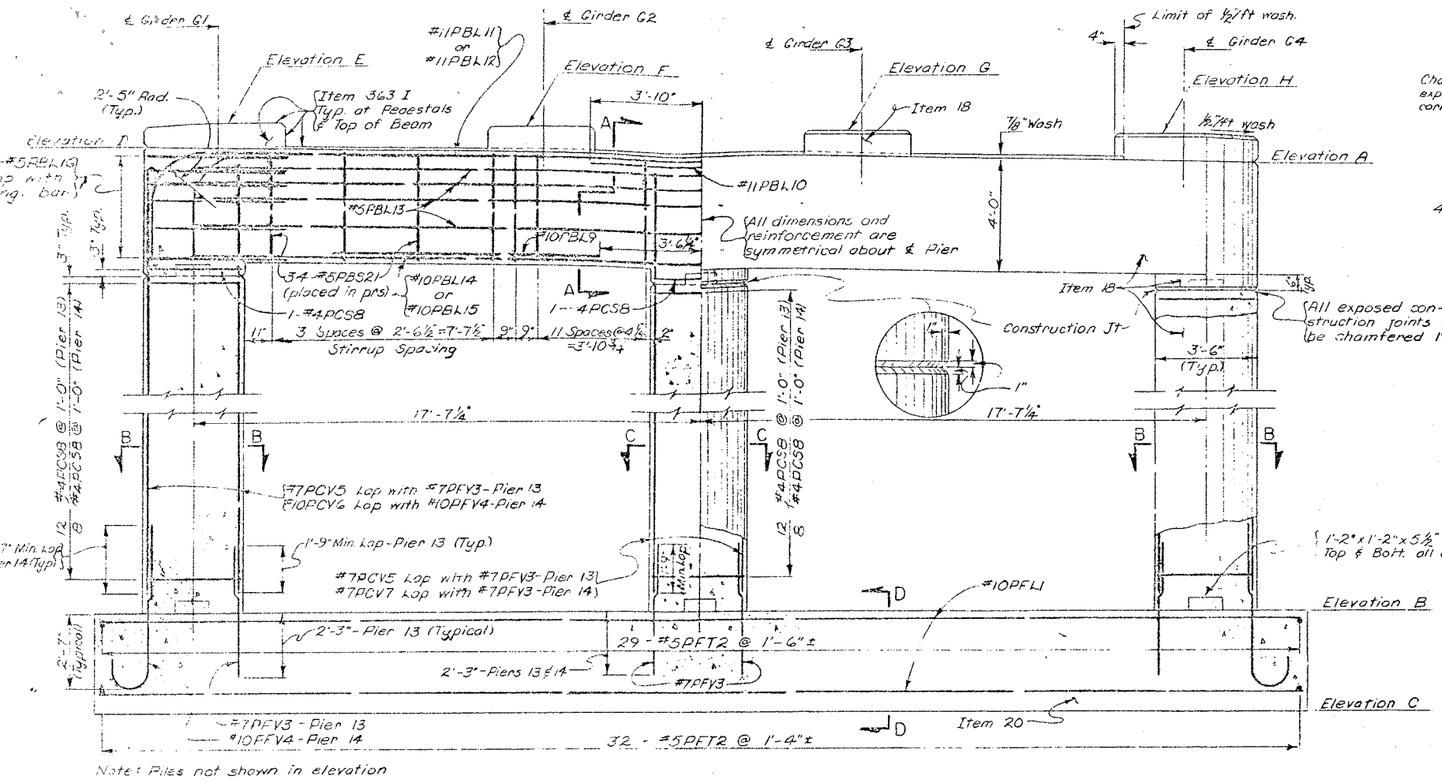

ELEVATION
Scale: 3/8" = 1'-0"

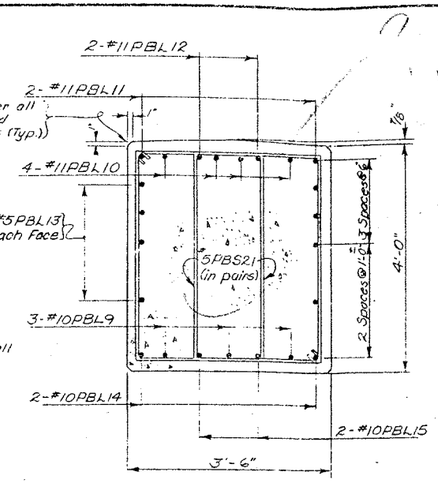

SECTION A-A
Scale: 3/4" = 1'-0"

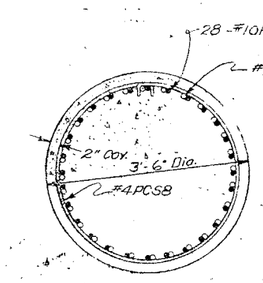

SECTION B-B, PIER 14
Scale: 3/4" = 1'-0"

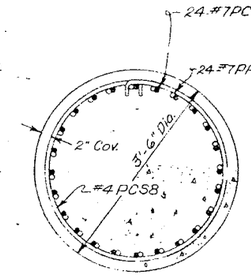

SECTION C-C, PIER 14
Scale: 3/4" = 1'-0"

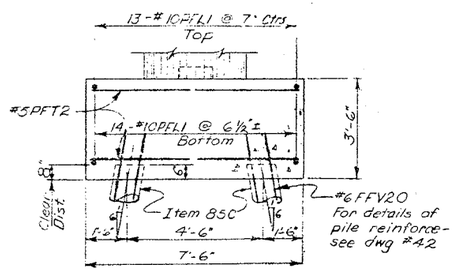

SECTION D-D
Scale: 3/8" = 1'-0"

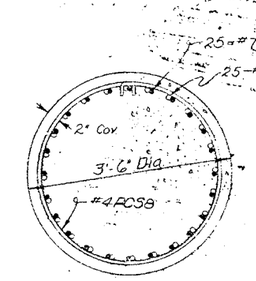

SECTION B-B & C-C, PIER 13
Scale: 3/4" = 1'-0"

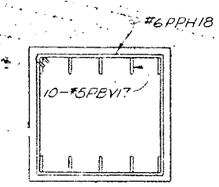

INTERIOR

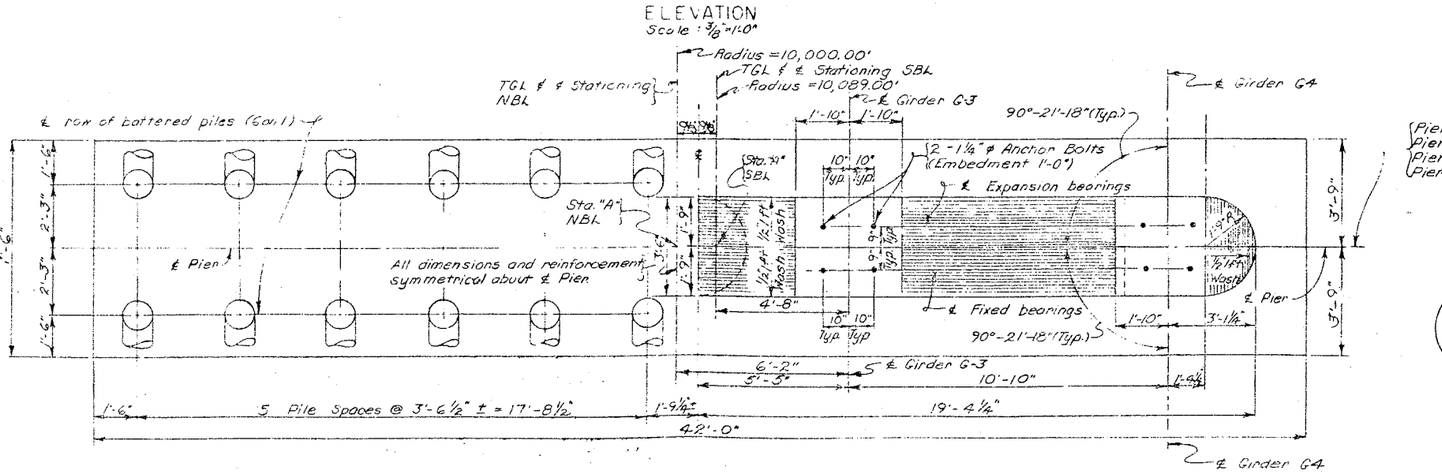

Pier 13 NB AZ 264°53'51"
Pier 14 NB AZ 265°36'29"
Pier 13 SB AZ 264°39'57"
Pier 14 SB AZ 265°22'33"

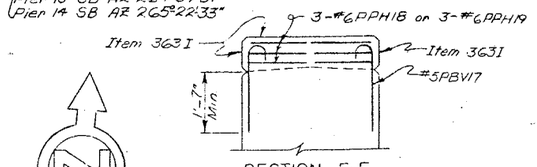

SECTION E-E
Scale: 1/2" = 1'-0"

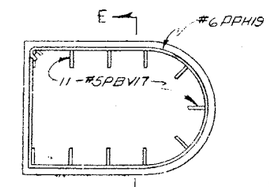

FASCIA PEDESTALS
Scale: 1/2" = 1'-0"

STATION "A"		
PIER	NBL	SBL
#13	234+70.76	236+38.86
#14	235+94.76	237+63.86

Note:
All footing reinforcement shall have a min. cover of 3" unless otherwise shown.
All other reinforcement shall have a min. cover of 2" unless otherwise shown.
Estimated length of Cast-in-Place Concrete Piles = 65' Pier 13 SB, 60' Pier 13 NB & 60' Piers 14 NB & SB

For design purposes the pile load does not exceed 35 tons per pile.

PIER DATA				
DESCRIPTION	NORTHBOUND		SOUTHBOUND	
	PIER 13	PIER 14	PIER 13	PIER 14
ELEVATION A	422.22	418.44	422.14	418.36
" B	406.70	407.00	406.70	407.00
" C	403.20	403.50	403.20	403.50
" D	422.90	419.12	422.81	419.03
" E	423.89	420.12	423.81	420.03
" F	423.67	419.90	423.59	419.81
" G	423.44	419.67	423.36	419.58
" H	423.22	419.44	423.14	419.36

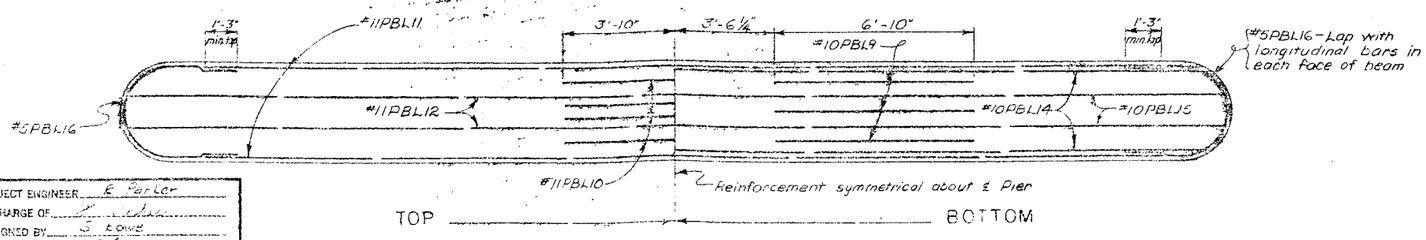

PIER CAP REINFORCEMENT
Scale: 3/8" = 1'-0"

PROJECT ENGINEER E. Porter
IN CHARGE OF
DESIGNED BY S. Lowe
DESIGN CHECKED BY
DETAILED BY
DETAIL CHECKED BY

BRIDGE NO. 2
INTERSTATE ROUTE 481 OVER DEWITT YARDS

PIERS #13 & #14 (NB & SB)

DRAWING NO. 16 OF 50

FED. RD. REG. NO.	STATE	FEDERAL AID PROJECT NO.	SHEET NO.	TOTAL SHEETS
1	NEW YORK	I-690-3(23) I-481-2(116)	195	309

INTERSTATE ROUTE CONNECTION 570
BUFFALO INTERCHANGE (PHASE 2)
ONONDAGA COUNTY

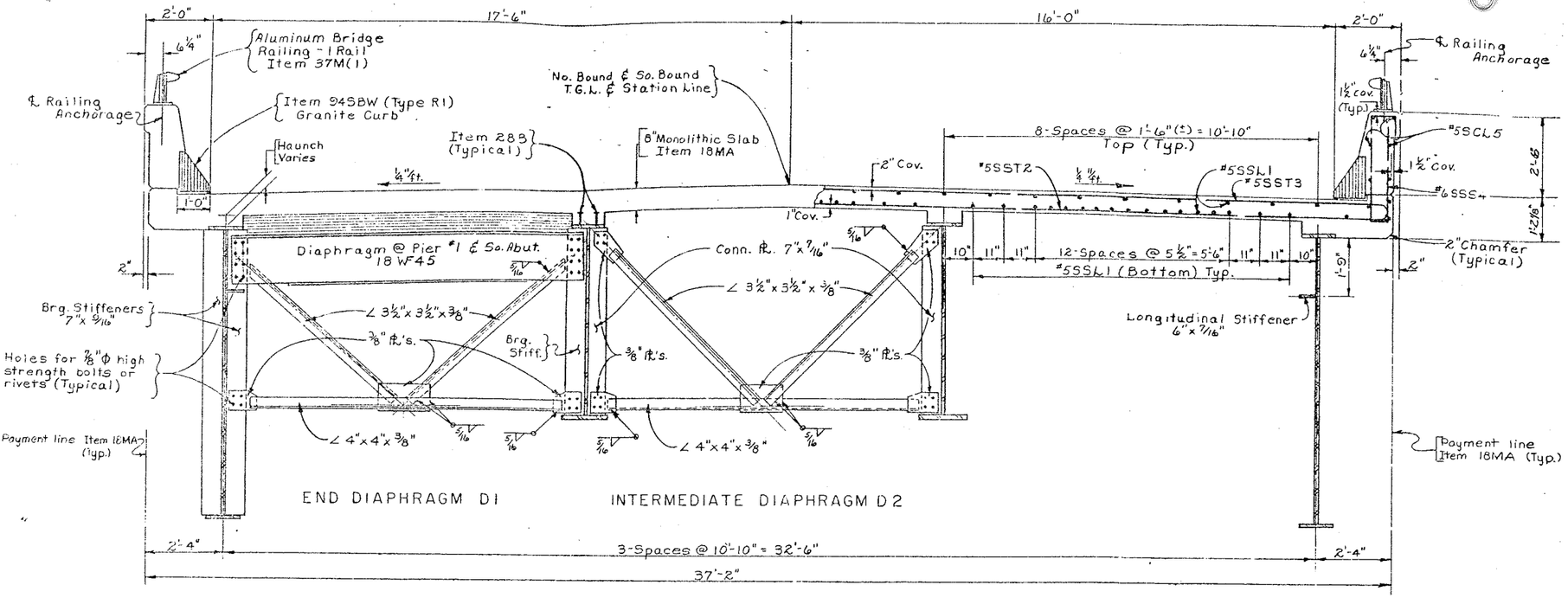

Note:

South Bound Lane looking up station.
North Bound Lane looking down station.

TRANSVERSE SECTION
Scale: ½" = 1'-0"

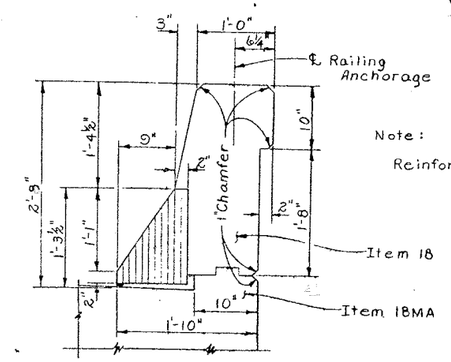

PARAPET DETAIL
Scale: 1" = 1'-0"

Note:

Reinforcement not shown.

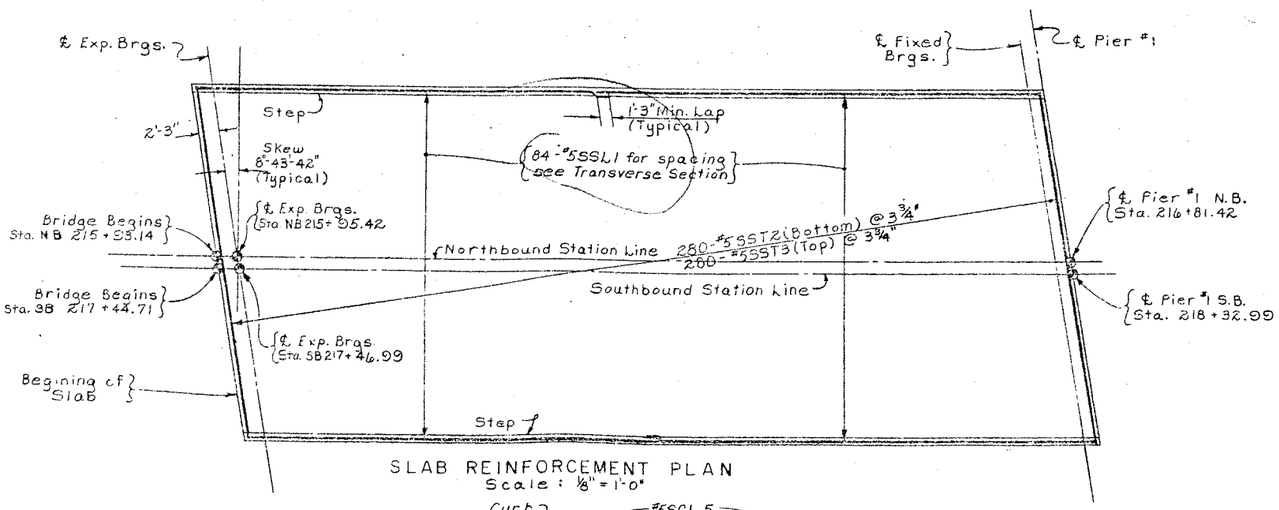

SLAB REINFORCEMENT PLAN
Scale: ⅛" = 1'-0"

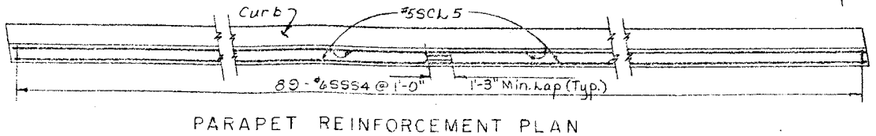

PARAPET REINFORCEMENT PLAN
Scale: ¼" = 1'-0"

Notes:

Holes for ⅞" ϕ rivets or high strength bolts may be omitted and welding substituted if contractor so elects. When the contractor elects to substitute the welded connection for the bolted connection shown, the amount of welding used shall be equivalent in strength to the bolts removed.

For details of Railing, Railing Anchorage and Granite Curbs see Dwg. # 35 & 36.

For Joint Details see Dwg. # 33.

PROJECT ENGINEER R. Parker
IN CHARGE OF F. Fekal
DESIGNED BY N. Toppses
DESIGN CHECKED BY R. Thimple
DETAILED BY J. C. Thompson
DETAIL CHECKED BY [illegible]

BRIDGE NO. 2
INTERSTATE ROUTE 481 OVER DEWITT YARDS

TRANSVERSE SECTION & SLAB PLAN
SPAN 1 N.B. & S.B.

DRAWING NO. 17 OF 50

FED. RD. REG. NO.	STATE	FEDERAL AID PROJECT NO.	SHEET NO.	TOTAL SHEETS
9	NEW YORK	I-690-8(28) I-481-2(16)	196	800

INTERSTATE ROUTE CONNECTION 570
SYRACUSE INTERCHANGE (PHASE 2)
ONONDAGA COUNTY

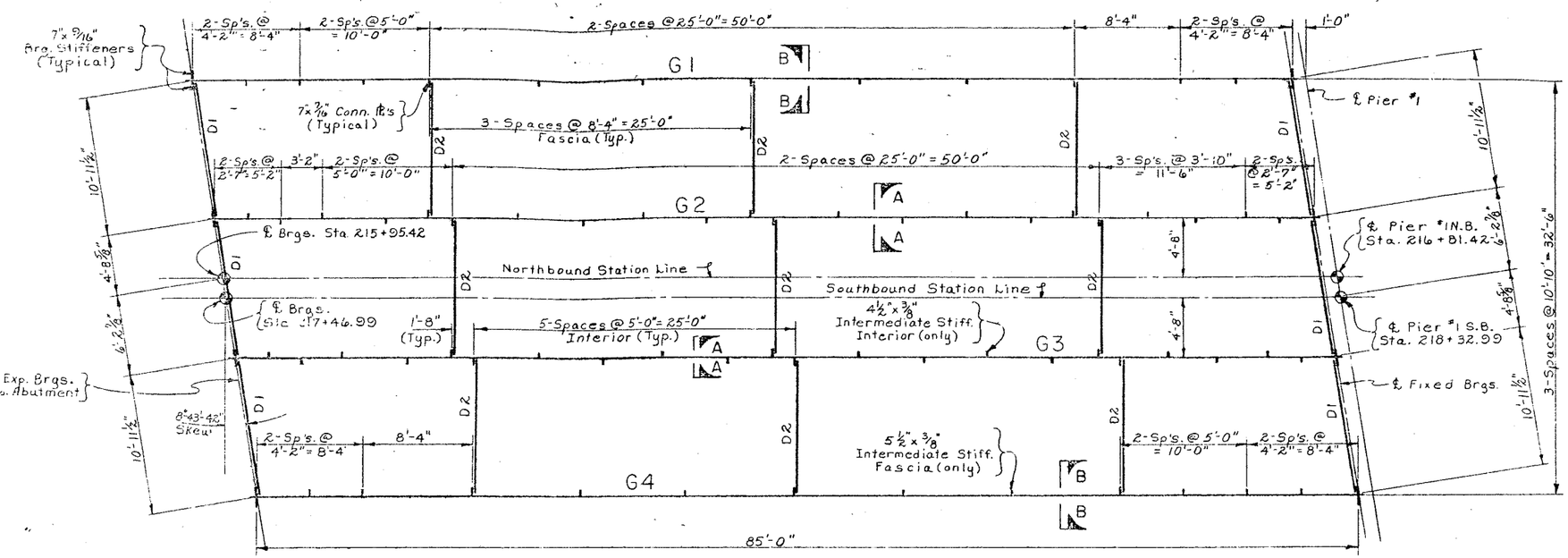

see Transverse Section for Diaphragms.

STEEL LAYOUT (S.B. & N.B.)
Scale : 3/16" = 1'-0"

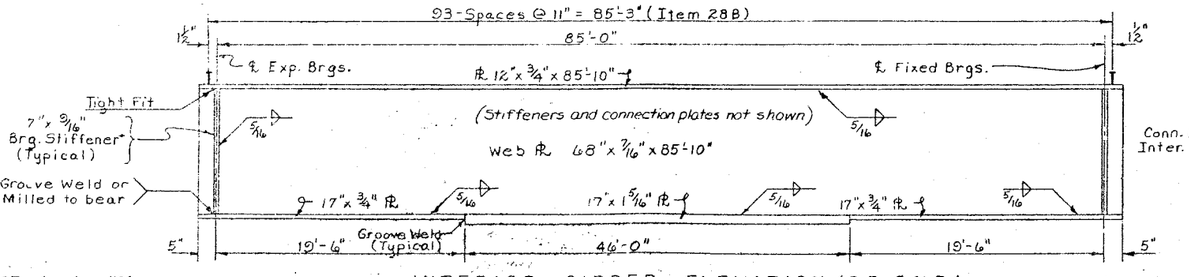

INTERIOR GIRDER ELEVATION (S.B. & N.B.)
Not to Scale

* Two bearing stiffeners required at each end of girder.

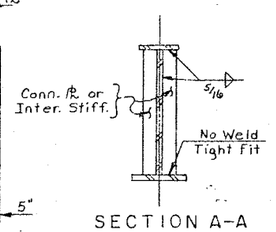

SECTION A-A
Not to Scale

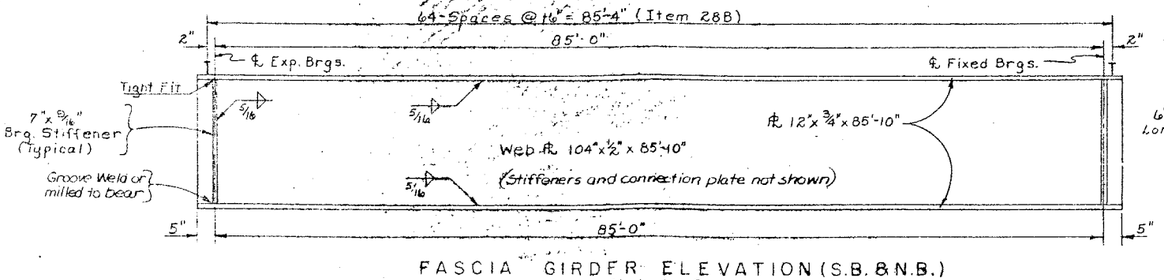

FASCIA GIRDER ELEVATION (S.B. & N.B.)
Not to Scale

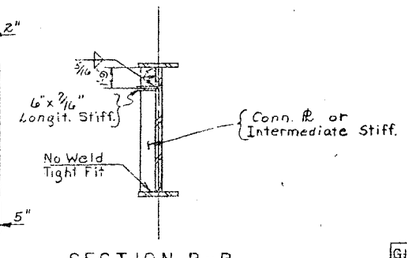

SECTION B-B
Not to Scale

Notes :

Web and flanges shall be ASTM designation A36 steel.

Stiffeners, Connection Plates, Diaphragm and Gusset Plates shall be ASTM designation A36 steel.

For Bearing Details see Drawing No's. 42 & 43.

Stud Shear Connectors shall be 6" high and placed in pairs. See Drawing No. 42 for additional details.

For Height of Haunch see Table of Haunch Heights Drawing No. 34.

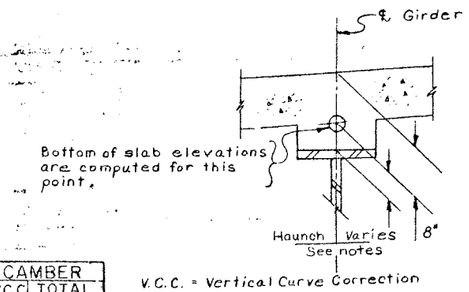

V.C.C. = Vertical Curve Correction

S.D.L. = Superimposed Dead Load, includes weight of railing.

		THEO. BOTTOM OF SLAB ELEVATIONS			DEFLECTIONS (FT.)				CAMBER		
									V.C.C.	TOTAL	
GIRDER	SPAN	℄ Exp. Brgs.	℄ Span	℄ Fix. Brgs.	STEEL	SLAB	SDL	TOTAL	(ft.)	(ft.)	(in.)
G1 N.B.	1	446.55	447.12	447.65	.01	.03	.01	.05	.02	.07	3/8
G2 N.B.	1	446.80	447.40	447.90	.02	.08	.02	.12	.02	.14	1 11/16
G3 N.B.	1	446.79	447.36	447.89	.02	.08	.02	.12	.02	.14	1 11/16
G4 N.B.	1	446.59	447.16	447.68	.01	.03	.01	.05	.08	.07	7/8
G1 S.B.	1	446.34	446.92	447.46	.01	.03	.01	.05	.02	.07	7/8
G2 S.B.	1	446.59	447.17	447.71	.02	.08	.02	.12	.02	.14	1 11/16
G3 S.B.	1	446.64	447.22	447.76	.02	.08	.02	.12	.02	.14	1 11/16
G4 S.B.	1	446.44	447.02	447.55	.01	.03	.01	.05	.02	.07	7/8

BRIDGE NO. 2
INTERSTATE ROUTE 481 OVER DEWITT YARDS

SPAN 1 (S.B. & N.B.)

PROJECT ENGINEER F. Parker
IN CHARGE OF F. Fekel
DESIGNED BY N. Toepsee
DESIGN CHECKED BY H. Tamule
DETAILED BY J. C. Thompson
DETAIL CHECKED BY [illegible]

DRAWING NO. 18 OF 50

FED. RD. REG. NO.	STATE	FEDERAL AID PROJECT NO.	SHEET NO.	TOTAL SHEETS
1	NEW YORK	~~F-000-3(029)~~ I-481-2(116)	197	309

INTERSTATE ROUTE CONNECTION 570
BUTTERNUT INTERCHANGE (PHASE 2)
ONONDAGA COUNTY

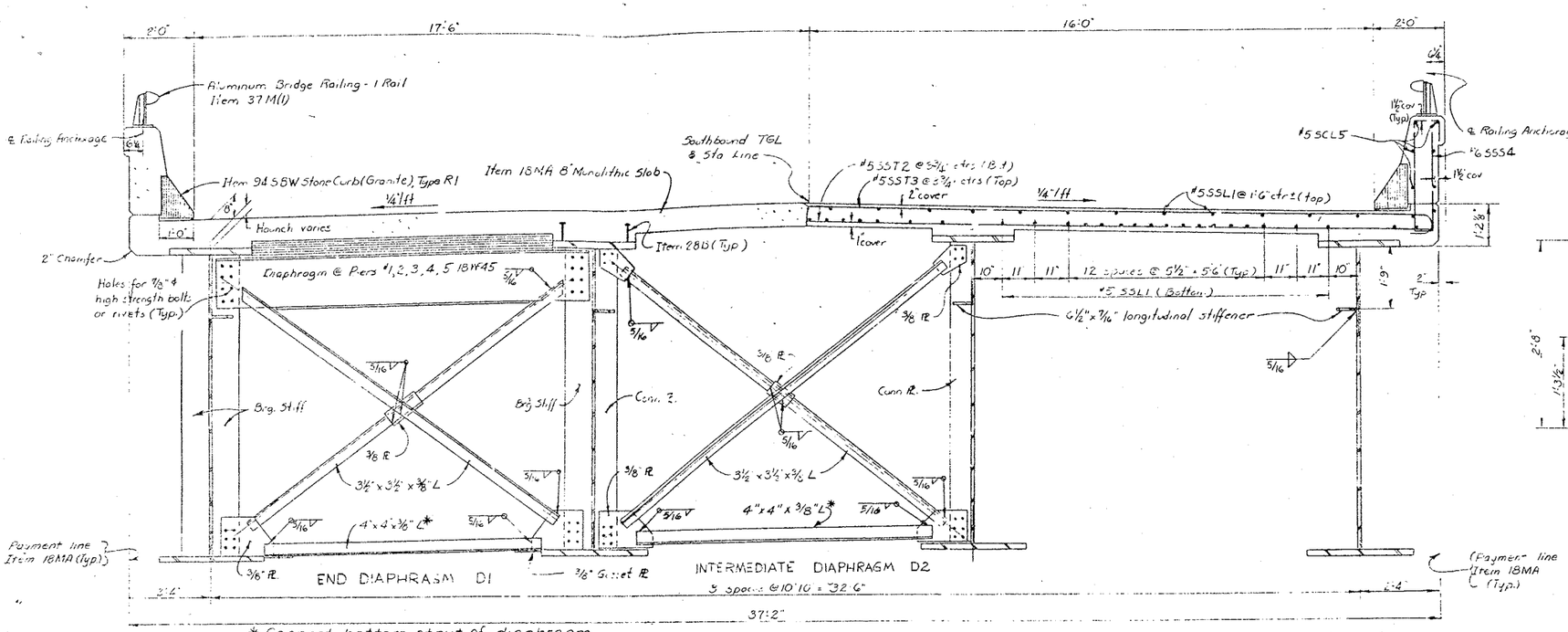

TRANSVERSE SECTION (SPANS 2,3,4,5 & 6)
Scale ½" = 1'-0"

* Connect bottom strut of diaphragm to horizontal gusset plate in bays where there are bottom laterals. Connect bottom strut of diaphragm to vertical gusset plates in bays where there are no bottom laterals.

Note: Southbound Lane looking up station shown. Northbound Lane looking down station similar

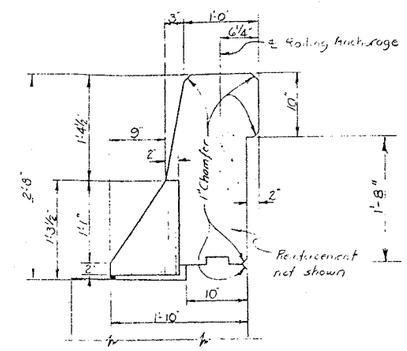

PARAPET DETAIL
Scale 1" = 1'-0"

Note: Holes for ⅞" ϕ high strength bolts or rivets may be omitted and welding substituted if the contractor so elects. When the contractor elects to substitute the welded connection for the bolted connection shown, the amount of welding used shall be equivalent in strength to the bolts omitted.

For parapet railing details see drawing no. 35 & 36

For granite curb details see drawing no. 35

Steel meeting the minimum requirements of A.S.T.M. Designations A36 shall be used for all intermediate stiffeners, longitudinal stiffeners, connection plates, bearing stiffeners, diaphragm, bracing, & thru lateral bracing (except gusset plates), trough support angles, finger joint support plates and open armored joint support plates at the south end of span 2.

Finger joint plates, vertical side plates, and deflector plates at finger joints, and armoring angles and side plates at open joint at south end of span 2 shall be corrosion resistant steel A.S.T.M. Designation A 242.

The webs of the girders shall be A.S.T.M. Designation A441.

See details of individual spans for type of steel to be used in girder flanges and bottom lateral gusset plates.

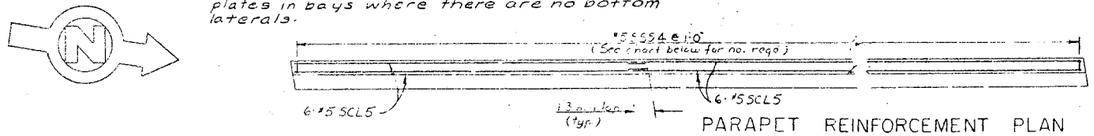

PARAPET REINFORCEMENT PLAN
No Scale

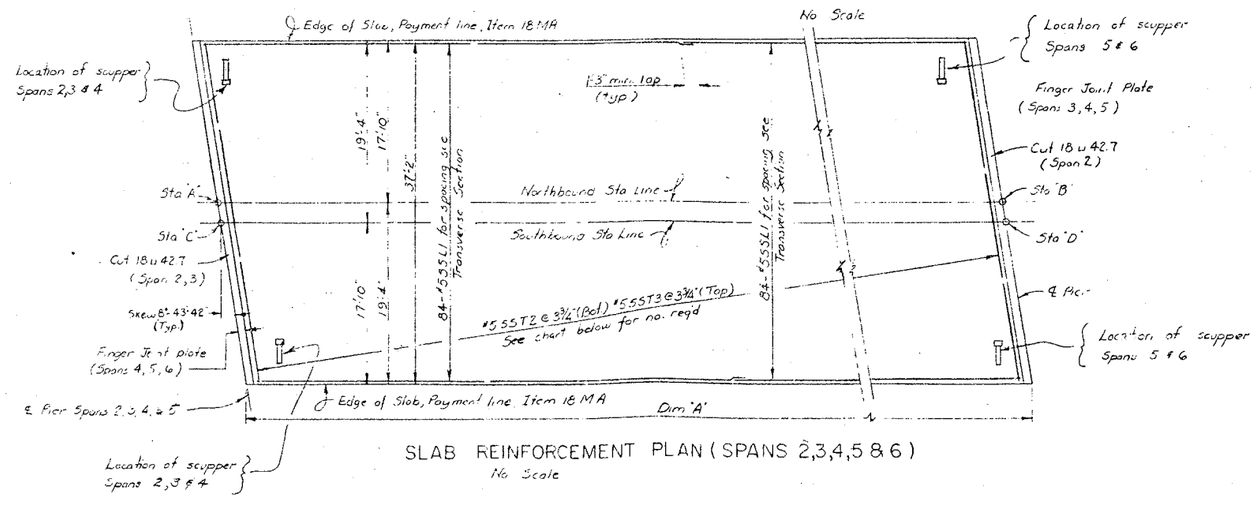

SLAB REINFORCEMENT PLAN (SPANS 2,3,4,5 & 6)
No Scale

SPAN	DIM "A"	STA. A	STA. B	STA. C	STA. D	SST2 & SST3 NO. REQ'D	SSS4 NO. REQ'D
2	150'-2" SB & NB	214+81.42	216+37.59	218+32.99	219+89.15	497	157
3	171'-2" SB & NB	218+37.59	220+06.76	219+89.15	221+60.32	544	172
4	198'-0" SB & NB	220+06.76	222+04.76	221+60.32	223+58.32	629	198
5	198'-0" SB & NB	222+06.76	224+04.76	223+58.32	225+56.32	629	198
6	198'-0" SB & NB	224+04.76	226+02.76	225+56.32	227+54.32	629	198

PROJECT ENGINEER E. Tarsser
IN CHARGE OF E. Tarsser
DESIGNED BY E. Tarsser
DESIGN CHECKED BY E. Tarsser
DETAILED BY C.H. Smith
DETAIL CHECKED BY [illegible]

BRIDGE NO. 2
INTERSTATE ROUTE 481 OVER DEWITT YARDS

TRANSVERSE SECTION & SLAB PLAN
SPANS 2,3,4,5 & 6 NB & SB

DRAWING NO. 19 OF 50

FED. RD. REG. NO.	STATE	FEDERAL AID PROJECT NO.	SHEET NO.	TOTAL SHEETS
1	NEW YORK	I-690-3(28) I-481-2(116)	198	300

INTERSTATE ROUTE CONNECTION 690
SUPERIORITY INTERCHANGE (PHASE 2)
ONONDAGA COUNTY

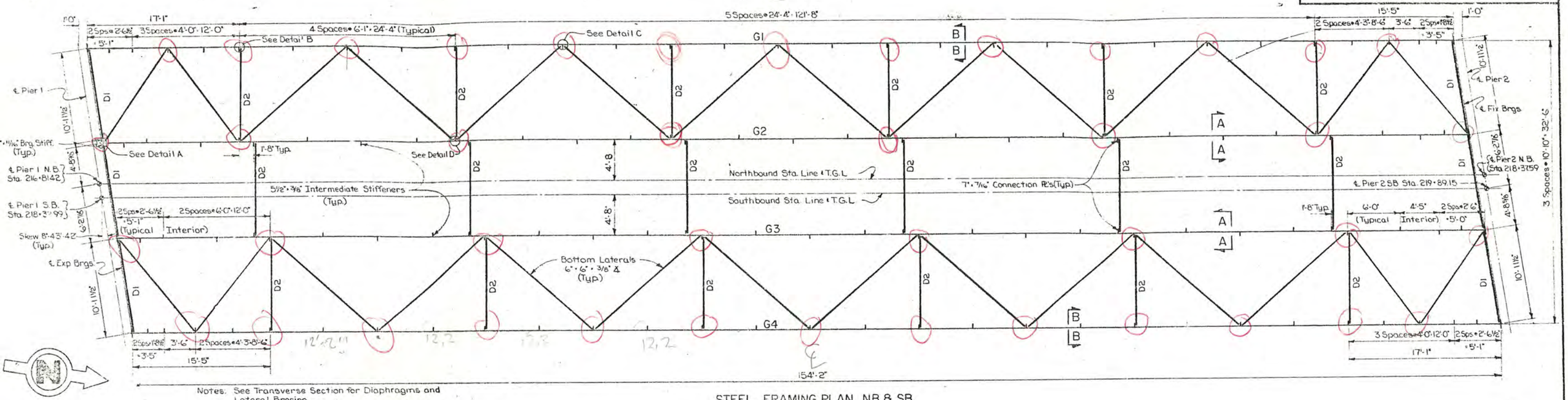

Notes: See Transverse Section for Diaphragms and Lateral Bracing.
See Drawing No. 22 for Cross Lateral Bracing Details A, B, C & D.

STEEL FRAMING PLAN NB & SB
Scale: 3/16" = 1'-0"

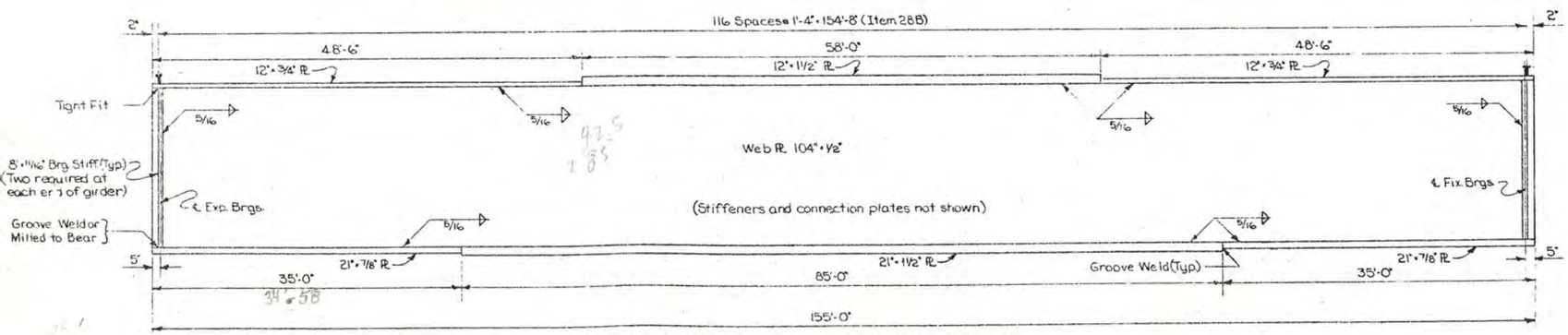

FASCIA & INTERIOR GIRDER ELEVATION NB & SB
Not to Scale

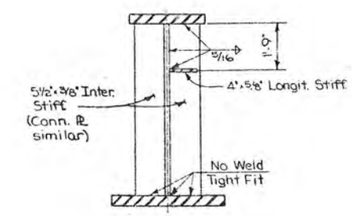

SECTION A-A
Not to Scale

Notes:
Web and flanges shall be A.S.T.M. designation A441 Steel.
Stiffeners, connection plates, diaphragms, lateral bracing and gusset plates shall be A.S.T.M. designation A36 Steel.
For details of bearings see Dwg. No. 42 & 43.
Stud Shear Connectors shall be 6" high.

GIRDER	SPAN	THEO. BOTTOM OF SLAB ELEVATIONS ℄ EXP BRGS.	℄ SPAN	℄ FIX. BRGS.	DEFLECTIONS (FT.) STEEL	SLAB	SDL.	TOT.	CAMBER V.C.C. (FT.)	TOTAL (FT.)	(IN.)
G1 NB	2	447.67	448.52	449.28	.08	.16	.07	.31	.07	.38	4 9/16
G2 NB	2	447.92	448.76	449.47	.08	.24	.07	.39	.07	.46	5 1/2
G3 NB	2	447.91	448.75	449.45	.08	.24	.07	.39	.07	.46	5 1/2
G4 NB	2	447.70	448.54	449.24	.08	.16	.07	.31	.07	.38	4 9/16
G1 SB	2	447.48	448.35	449.08	.08	.16	.07	.31	.07	.38	4 9/16
G2 SB	2	447.73	448.60	449.32	.08	.24	.07	.39	.07	.46	5 1/2
G3 SB	2	447.78	448.65	449.37	.08	.24	.07	.39	.07	.46	5 1/2
G4 SB	2	447.58	448.44	449.16	.08	.16	.07	.31	.07	.38	4 9/16

V.C.C. - Vertical Curve Correction
S.D.L. - Superimposed Dead Load, includes weight of railing.

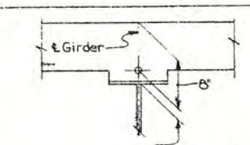

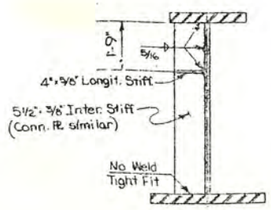

SECTION B-B
Not to Scale

BRIDGE NO. 2
INTERSTATE ROUTE 381 OVER DEWITT YARDS

SPAN 2 FRAMING PLAN

DRAWING NO. 20 OF 50

PROJECT ENGINEER R. L. Parker
IN CHARGE OF F. Eckel
DESIGNED BY N. P. Tsoses
DESIGN CHECKED BY R. Thimble
DETAILED BY J. F. Darcy
TRAIL. CHECKED BY [illegible]

FED. RD. REG. NO.	STATE	FEDERAL AID PROJECT NO.	SHEET NO.	TOTAL SHEETS
1	NEW YORK	I-690-3(28) I-481-2(116)	199	303

INTERSTATE ROUTE CONNECTION 570
BUTTERNUT INTERCHANGE (PHASE 2)
ONONDAGA COUNTY

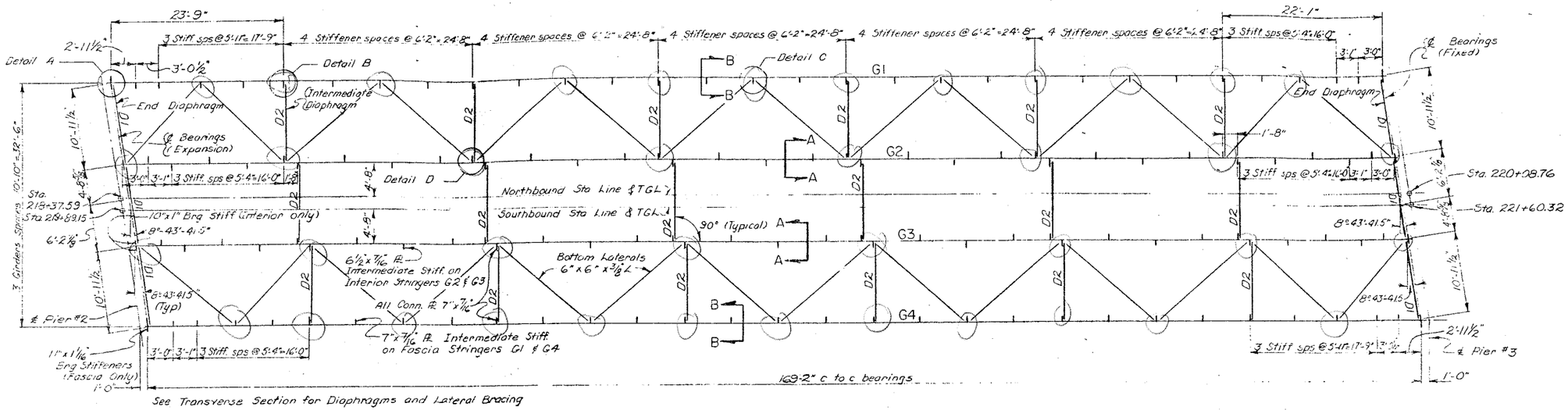

STEEL LAYOUT (SPAN #3 NB & SB)
Scale 1/8" = 1'-0"

Note: Stud Shear Connectors shall be 6" high.

For Bearings Details see Drawing # 42 and 43
For Joint Details see Drawing # 31
For Trough Details see Drawing # 39

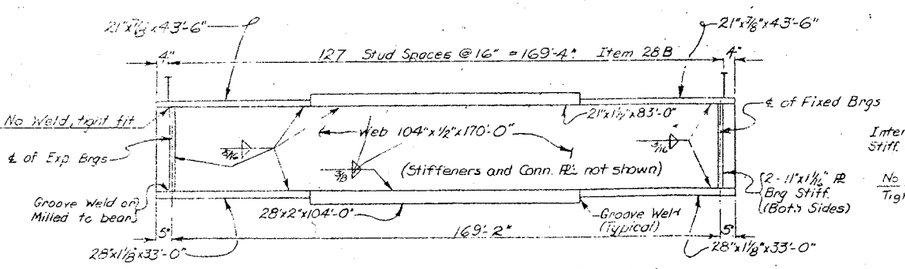

FASCIA GIRDER ELEVATION (G1 & G4)
Not to Scale

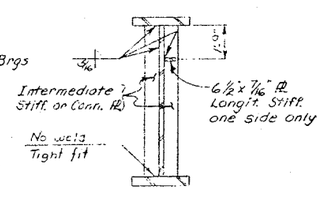

SECTION A-A
Not to Scale
Note: All Conn. Plates 7"x7/16"

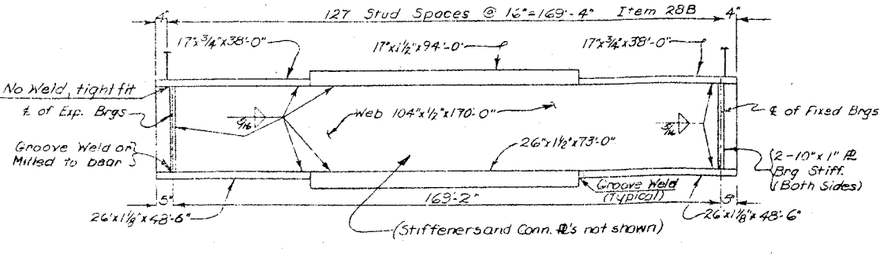

INTERIOR GIRDER ELEVATION (G2 & G3)
Not to Scale

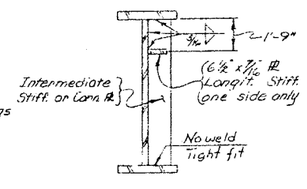

SECTION B-B
Not to Scale
Note: All Conn. Plates 7"x7/16"

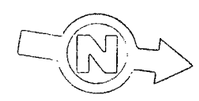

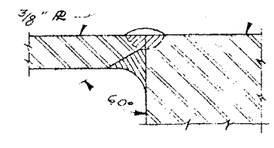

DETAIL #1

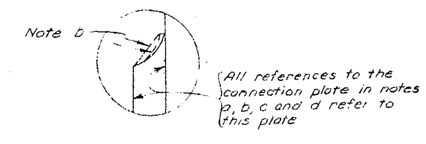

DETAIL #2

LATERAL BRACING DETAILS
Not to Scale

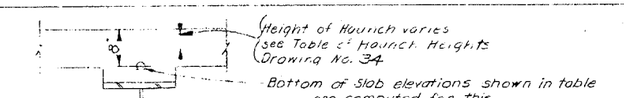

GIRDER	NORTHBOUND THEO. BOT. OF SLAB EL.			SOUTHBOUND THEO. BOT. OF SLAB EL.			DL DEFLECTION STEEL (FT.)	SLAB (FT.)	S.D.L. (FT.)	TOTAL (FT.)	CAMBER V.C.C. (FT.)	TOTAL (FT.)	(IN.)
SPAN 3	℄ SO. BRG	℄ SPAN	℄ NO. BRG	℄ SO. BRG	℄ SPAN	℄ NO. BRG							
G1	449.24	449.95	450.29	449.10	449.74	450.20	.11	.15	.11	.37	.08	.45	5 3/8
G2	449.48	450.09	450.52	449.34	449.97	450.44	.12	.29	.04	.45	.08	.53	6 3/8
G3	449.46	450.07	450.50	449.39	450.02	450.48	.12	.29	.04	.45	.08	.53	6 3/8
G4	449.25	449.85	450.28	449.18	449.80	450.26	.11	.15	.11	.37	.08	.45	5 3/8

S.D.L. = superimposed dead load, includes weight of parapet and railing.
V.C.C. = vertical curve correction

Note:

a. The connection plate shall be prepared and welded as a single bevel groove weld as shown in Detail #1. It shall then be Air Carbon-Arc gauged from the second side into sound weld metal and then welded as detailed. All welding shall be in the flat or "downhand" position.

b. The plate may be of any shape that will provide often welding, cutting, and finish grinding a smooth transition from the flange edge at a minimum radius of 12".

c. Both the connection plate and flange are to be the same type of steel.

d. Field welding to the connection plate will not be permitted.

The webs, flanges and gusset plates for bottom lateral bracing for the Span 3 girders shall be A.S.T.M. Designation A441 steel. Stiffeners, diaphragms, bearings, and bottom lateral bracing (except gusset plates) shall be A.S.T.M. A36 steel.

For additional details of bottom lateral bracing see drawing No. 22

PROJECT ENGINEER: A. PARKER
IN CHARGE OF: E.D. ECKEL
DESIGNED BY: S. PAINE
DESIGN CHECKED BY: K. JENSEN
DETAILED BY: Tyler Dunnell
DETAIL CHECKED BY: Carl Smith

BRIDGE NO. 2
INTERSTATE ROUTE 481 OVER DEWITT YARDS

SPAN 3

DRAWING NO. 21 OF 30

FED. RD. REG. NO.	STATE	FEDERAL AID PROJECT NO.	SHEET NO.	TOTAL SHEETS
1	NEW YORK	I-090-3(28) I-481-2(116)	200	909

INTERSTATE ROUTE CONNECTION 690
SOUTHEAST ONONDAGA (PHASE 2)
ONONDAGA COUNTY

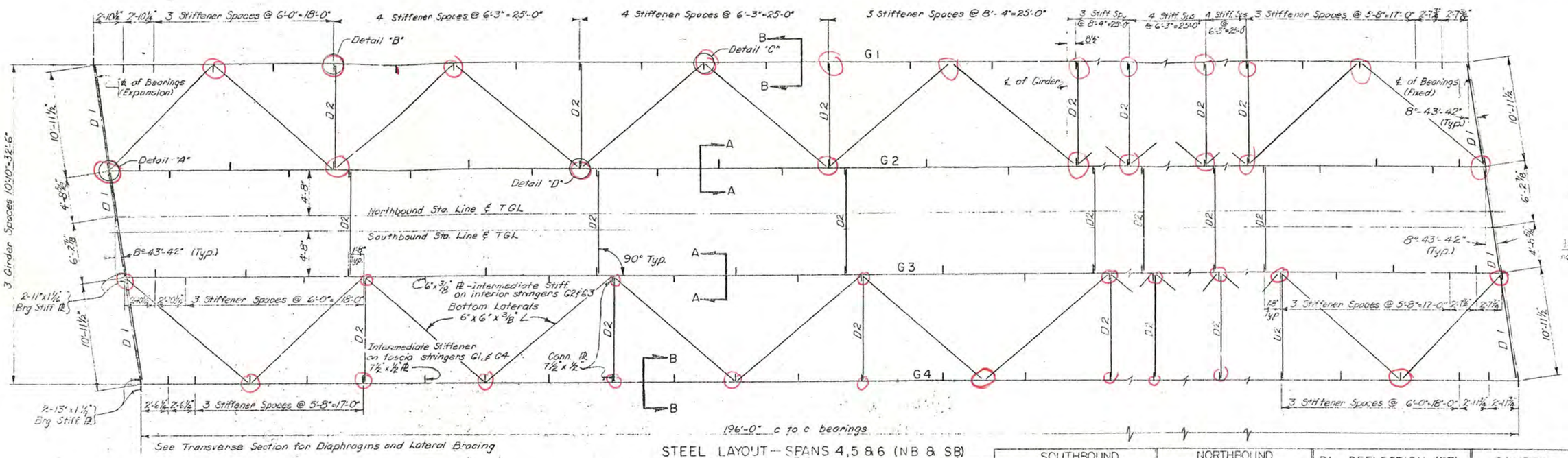

STEEL LAYOUT — SPANS 4, 5 & 6 (NB & SB)
Scale: 3/16" = 1'-0"

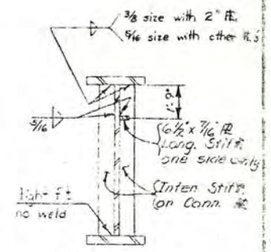

SECTION A-A
Not to Scale

All Connection PL's 7½" x ½"

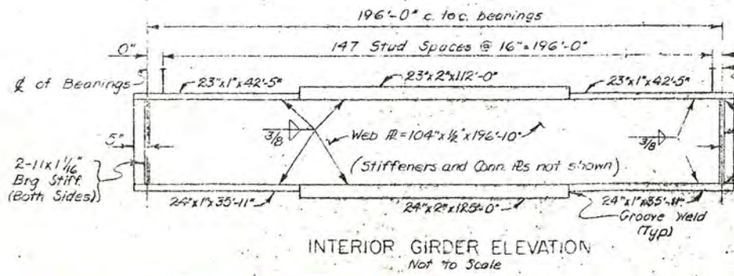

INTERIOR GIRDER ELEVATION
Not to Scale

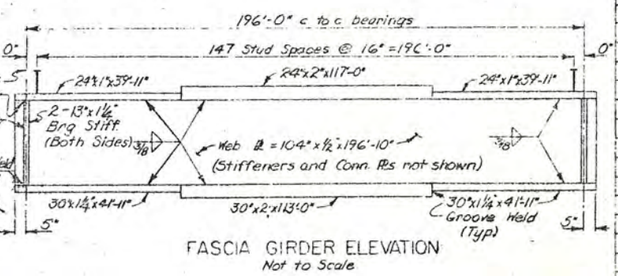

FASCIA GIRDER ELEVATION
Not to Scale

GIRDER	SOUTHBOUND THEO. BOT. OF SLAB EL.			NORTHBOUND THEO. BOT. OF SLAB EL.			DL DEFLECTION (FT)				CAMBER		
	℄ SO BRG	℄ SPAN	℄ NO BRG	℄ SO. BRG	℄ SPAN	℄ NO. BRG	STEEL	SLAB	SDL	TOTAL DL	VCC (FT)	TOTAL FEET	TOTAL INCHES
SPAN 4													
G1	450.21	450.54	450.63	450.30	450.59	450.66	0.172'	0.212'	0.168'	0.552'	0.113'	0.665'	8"
G2	450.45	450.77	450.86	450.53	450.82	450.89	0.178'	0.378'	0.062'	0.618'	0.113'	0.731'	8 13/16"
G3	450.48	450.80	450.89	450.51	450.80	450.55	0.178'	0.378'	0.062'	0.618'	0.113'	0.731'	8 13/16"
G4	450.27	450.58	450.67	450.29	450.57	450.63	0.172'	0.212'	0.168'	0.552'	0.113'	0.665'	8"
SPAN 5													
G1	450.63	450.50	450.14	450.66	450.50	450.10	0.172'	0.212'	0.168'	0.552'	0.113'	0.665'	8"
G2	450.86	450.72	450.36	450.89	450.72	450.32	0.178'	0.378'	0.062'	0.618'	0.113'	0.731'	8 13/16"
G3	450.89	450.75	450.39	450.85	450.68	450.28	0.178'	0.378'	0.062'	0.618'	0.113'	0.731'	8 13/16"
G4	450.66	450.52	450.15	450.63	450.45	450.05	0.172'	0.212'	0.168'	0.552'	0.113'	0.665'	8"
SPAN 6													
G1	450.13	449.54	448.72	450.09	449.47	448.62	0.172'	0.212'	0.168'	0.552'	0.113'	0.665'	8"
G2	450.35	449.75	448.93	450.31	449.68	448.83	0.178'	0.378'	0.062'	0.618'	0.113'	0.731'	8 13/16"
G3	450.37	449.77	448.94	450.27	449.64	448.78	0.178'	0.378'	0.062'	0.618'	0.113'	0.731'	8 13/16"
G4	450.19	449.53	448.70	450.04	449.40	448.54	0.172'	0.212'	0.168'	0.552'	0.113'	0.665'	8"

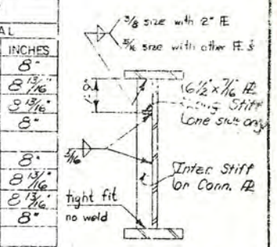

SECTION B-B
Not to Scale

SPANS 4, 5 & 6

1. The steel in the flanges and gusset plates for bottom lateral bracing shall be A.S.T.M. Designation A441 Modified.

2. The steel in the webs of the girders shall be A.S.T.M. Designation A441.

3. The steel in the stiffeners, diaphragms, bearings, and bottom lateral bracing (except gusset plates) shall be A.S.T.M. Designation A36.

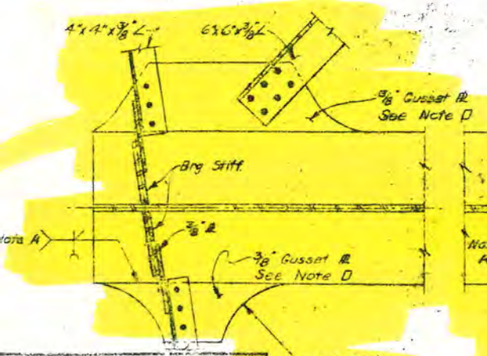

DETAIL "A"

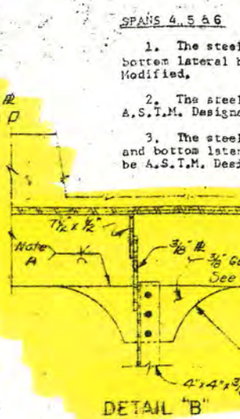

DETAIL "B"

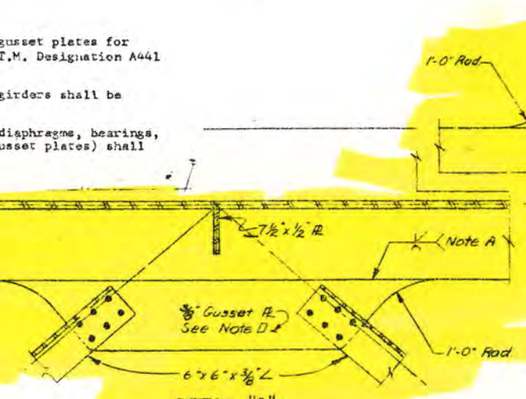

DETAIL "C"

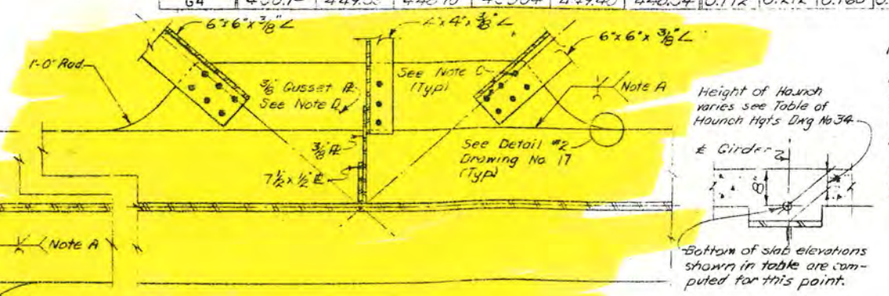

DETAIL "D"

Note:
A. The connection plate shall be prepared and welded as a single bevel groove weld as shown in Detail #1. It shall then be Air Carbon-Arc gouged from the second side into sound weld metal and then welded as detailed. All welding shall be in the flat or "downhand" position.
B. The plate may be of any shape that will provide after welding, cutting, and finish grinding a smooth transition from the flange edge of a minimum radius of 12".
C. Lateral bracing shall be attached to gusset plates with ⅞"ϕ high strength bolts. Field welding will not be permitted.
D. The gusset plate shall be the same type of steel as the flange to which it is welded.

Note:
Stud shear connectors shall be 6" high

For Bearing Details see Drawing #42 and #43
For Joint Details see Drawing #31
For Trough Details see Drawing #39

BRIDGE NO. 2
INTERSTATE ROUTE 481 OVER DEWITT YARDS

SPANS 4, 5 & 6

DRAWING NO. 22 OF 50

PROJECT ENGINEER E. FAGOS
IN CHARGE OF J. B. STERNMAN
DESIGNED BY S. POLVE
DESIGN CHECKED BY K. TANEVE
DETAILED BY [illegible]
CHECKED BY D.H. Smith

FED. RD. REG. NO.	STATE	FEDERAL AID PROJECT NO.	SHEET NO.	TOTAL SHEETS
1	NEW YORK	I-690-3(28) I-481-2(16)	201	309

INTERSTATE ROUTE CONNECTION 570
DEWITT INTERCHANGE (PHASE 2)
ONONDAGA COUNTY

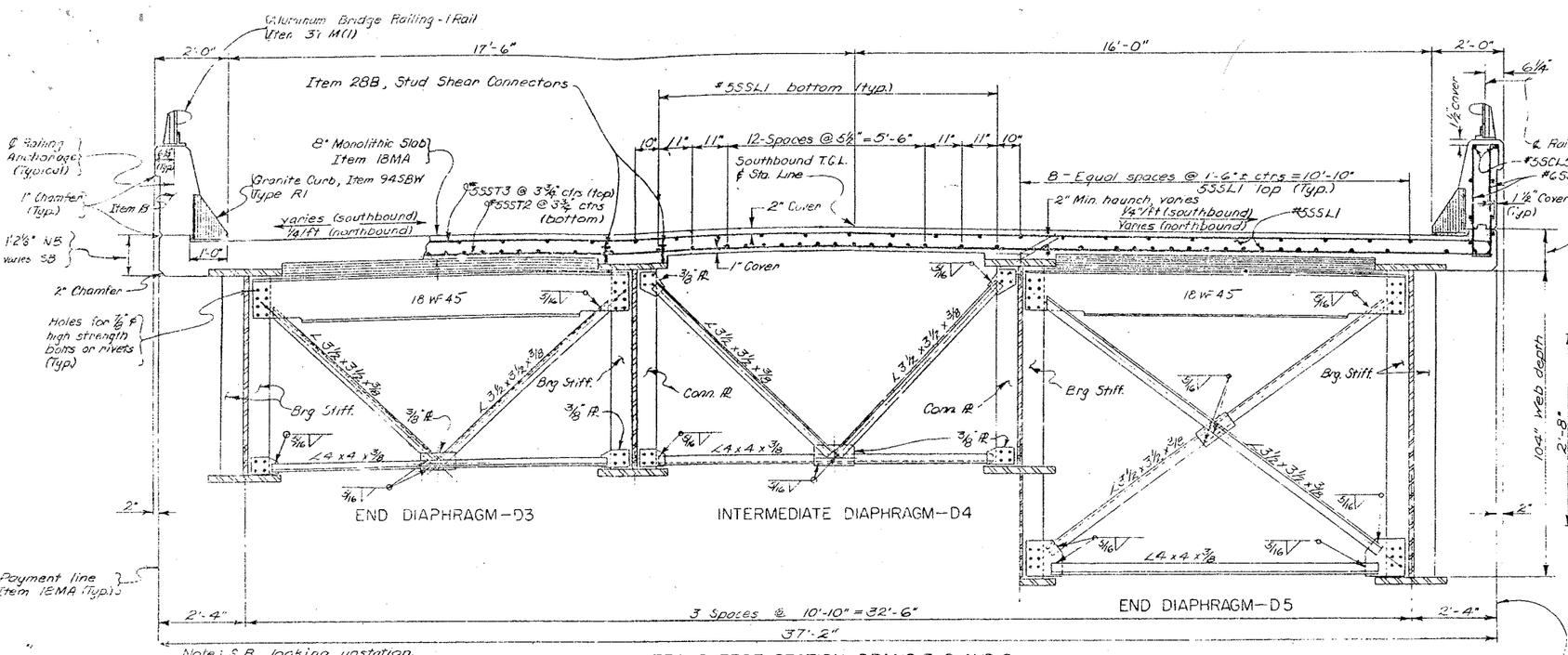

TRANSVERSE SECTION - SPANS 7, 8 AND 9
Scale: ½" = 1'-0"

Note: Holes for ⅞" ϕ high strength bolts or nivets may be omitted and welding substituted if the contractor so elects. When the contractor elects to substitute the welded connection for the bolted connection shown, the amount of welding used shall be equivalent in strength to the bolts omitted.

For detail of Railing see Drawing #36

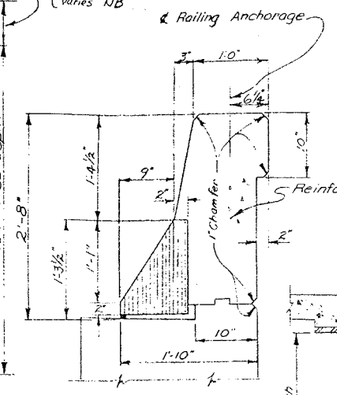

PARAPET DETAIL
Scale 1" = 1'-0"

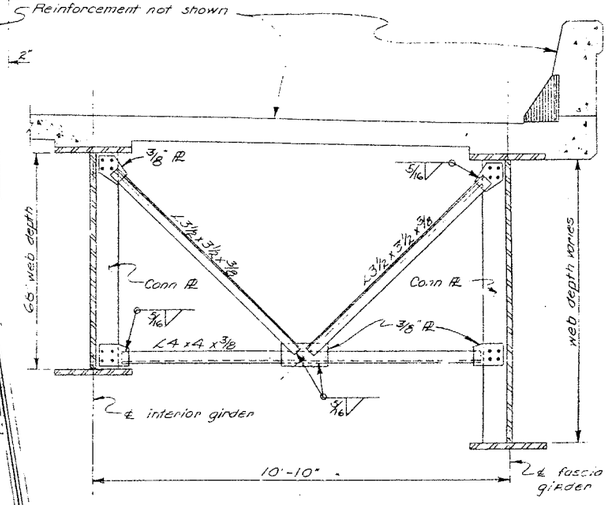

INTERMEDIATE DIAPHRAGM-D6
Scale: ½" = 1'-0"

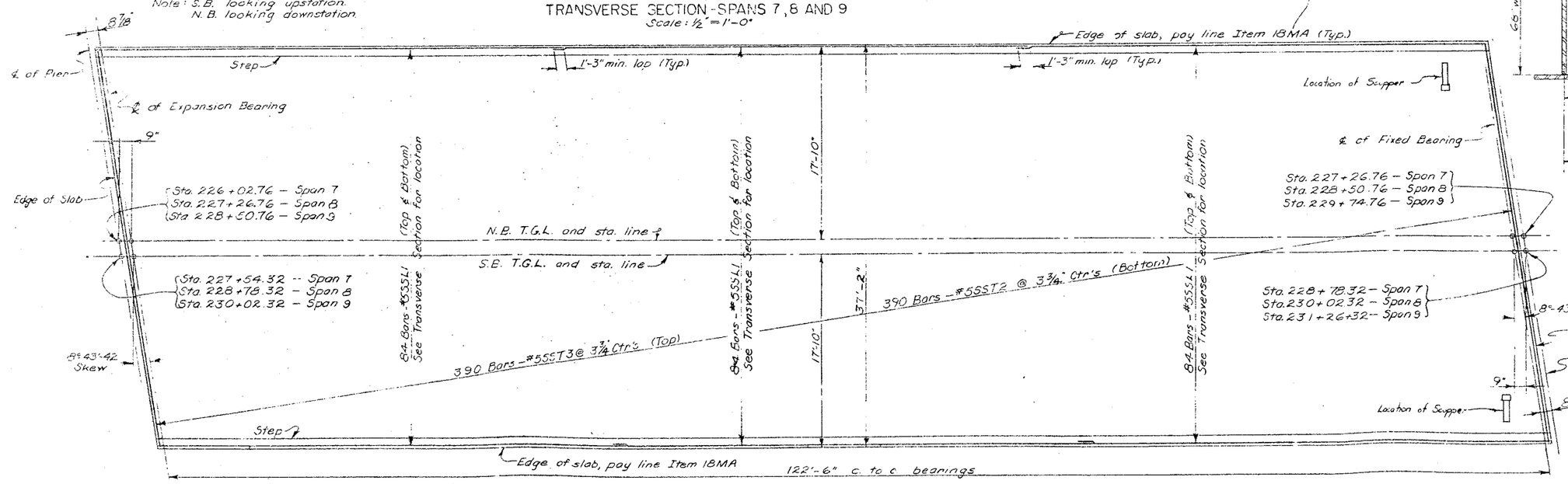

SLAB REINFORCEMENT PLAN, SPANS 7, 8 AND 9
Scale: 3/16" = 1'-0"

Note
Transverse reinforcement shall be placed parallel to skew.

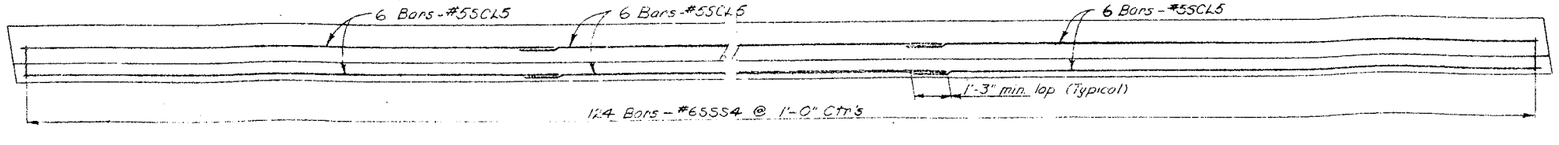

PARAPET REINFORCEMENT PLAN
Not to Scale

PROJECT ENGINEER F. Farmer
IN CHARGE OF J. B. Sherman
DESIGNED BY C. Lewis
DRAWN CHECKED BY L. Terrell
DETAILED BY J. Navarro
DETAIL CHECKED BY [illegible]

BRIDGE NO. 2
INTERSTATE ROUTE 481 OVER DEWITT YARDS

SPANS 7, 8 & 9

DRAWING NO. 23 OF 50

FED. RD. REG. NO.	STATE	FEDERAL AID PROJECT NO.	SHEET NO.	TOTAL SHEETS
1	NEW YORK	I-880-3(28) I-481-2(116)	202	309

INTERSTATE ROUTE CONSTRUCTION 370
INTERCHANGE (PIERS 2)
ONONDAGA COUNTY

TABLE OF STATIONS				
SPAN	STA. A	STA. B	STA. C	STA. D
7	226+02.76	227+54.32	227+26.76	228+78.32
8	227+26.76	228.78.32	228+50.76	230+02.32
9	228+50.76	230.02.32	229+74.76	231+26.32

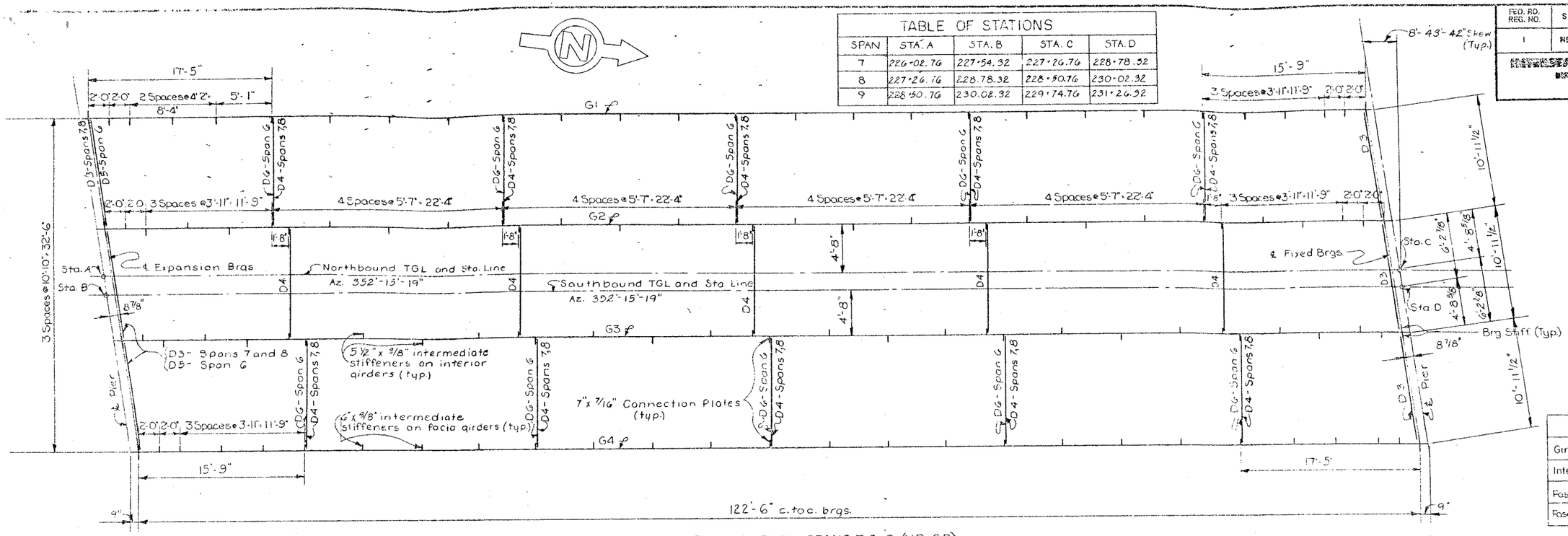

STEEL FRAMING PLAN SPANS 7, 8 & 9 (NB & SB)
Scale: 3/16" = 1'-0"

BEARING STIFFENER SIZES	
Girder	Size of each plate (2 plates @ each end of girder)
Interior spans 7,8 & 9	8" x 3/4"
Fascia span 7	8" x 3/4"
Fascia spans 8 & 9	9" x 7/8"

Steel in the girder webs and flanges shall be A.S.T.M. Designation A441 steel.
Steel in the stiffeners and diaphragms shall be A.S.T.M. Designation A36 steel.

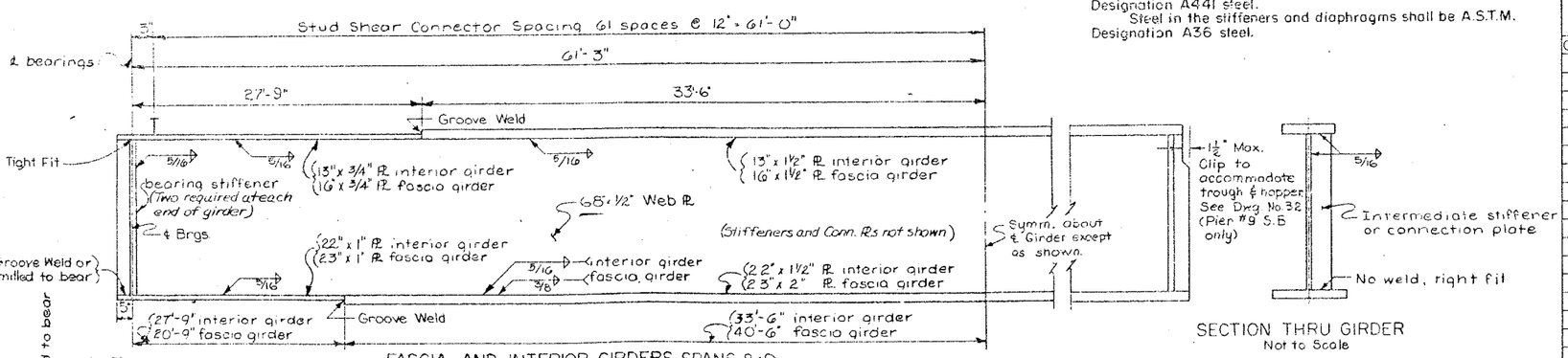

FASCIA AND INTERIOR GIRDERS SPANS 8 & 9
INTERIOR GIRDERS--SPAN 7
Not to Scale

SECTION THRU GIRDER
Not to Scale

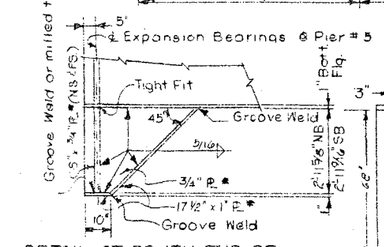

DETAIL AT SOUTH END OF INTERIOR STRINGERS--SPAN 7
Scale 3/8" = 1'-0"
* A441 Steel

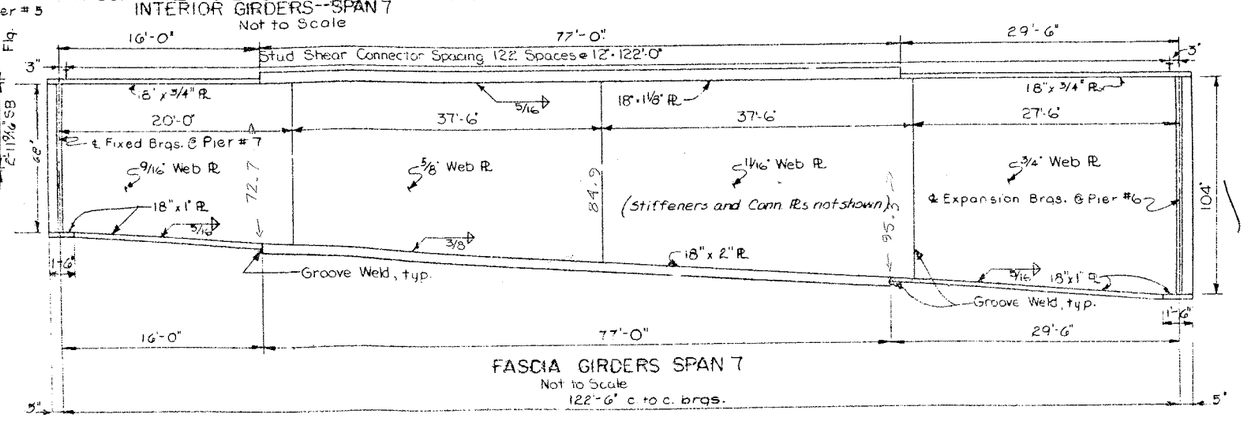

FASCIA GIRDERS SPAN 7
Not to Scale
122'-6" c. to c. brgs.

BOTTOM OF SLAB ELEVATIONS									
NORTHBOUND					SOUTHBOUND				
GIRDER	SPAN	℄ EXP BRGS	℄ SPAN	℄ FIX BRGS	GIRDER	SPAN	℄ EXP BRGS	℄ SPAN	℄ FIX BRGS
G1	7	448.60	447.95	447.22	G1	7	448.70	448.07	447.35
G2	7	448.61	448.16	447.42	G2	7	448.91	448.28	447.56
G3	7	448.77	448.11	447.37	G3	7	448.93	448.29	447.57
G4	7	448.52	447.87	447.12	G4	7	448.68	448.05	447.32
G1	8	447.20	446.37	445.45	G1	8	447.33	446.52	445.63
G2	8	447.40	446.57	445.65	G2	8	447.54	446.73	445.83
G3	8	447.35	446.52	445.59	G3	8	447.55	446.73	445.83
G4	8	447.10	446.27	445.34	G4	8	447.30	446.48	445.58
G1	9	445.43	444.42	443.83	G1	9	445.60	444.61	443.87
G2	9	445.63	444.62	443.38	G2	9	445.80	444.81	443.74
G3	9	445.57	444.56	443.46	G3	9	445.81	444.81	443.73
G4	9	445.32	444.30	443.20	G4	9	445.56	444.56	443.48

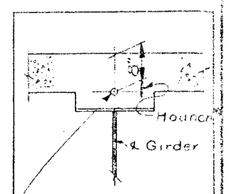

Bottom of Slab Elevations shown in table are computed for this point.

*Height of Hounch varies See Table of Hounch Heights on Drawing No. 34

	GIRDER	SPAN	DEFLECTIONS STEEL (FT.)	SLAB (FT.)	SDL. (FT.)	TOTAL (FT.)	CAMBER VCC (FT.)	TOTAL (FT.)	(IN.)
NB AND SB	G1	7	.05	.09	.06	.20	.04	.24	2 7/8
	G2	7	.08	.24	.03	.35	.04	.31	4 5/8
	G3	7	.08	.24	.03	.35	.04	.39	4 5/8
	G4	7	.05	.09	.06	.20	.04	.24	2 7/8
	G1	8	.07	.12	.08	.27	.04	.31	3 3/4
	G2	8	.08	.24	.03	.35	.04	.39	4 5/8
	G3	8	.08	.24	.03	.35	.04	.39	4 5/8
	G4	8	.07	.12	.08	.27	.04	.31	3 3/4
SB	G1	9	.07	.12	.08	.27	.02	.29	3 1/2
	G2	9	.08	.24	.03	.35	.03	.38	4 1/2
	G3	9	.08	.24	.03	.35	.04	.39	4 5/8
	G4	9	.07	.12	.08	.27	.04	.31	3 3/4
NB	G1	9	.07	.12	.08	.27	-.06	.21	2 1/2
	G2	9	.08	.24	.03	.35	.01	.36	4 3/8
	G3	9	.08	.24	.03	.35	.04	.39	4 5/8
	G4	9	.07	.12	.08	.27	.04	.31	3 3/4

V.C.C. = Vertical Curve Camber
S.D.L. = Superimposed dead load, includes the weight of sidewalk & railing.

BRIDGE NO. 2
INTERSTATE ROUTE 481 OVER DEWITT YARDS

SPANS 7, 8 & 9 (NB & SB)

2939

DRAWING NO. 24 OF 50

PROJECT ENGINEER R. L. Parker
IN CHARGE OF J. B. Sherman
DESIGNED BY [illegible]
DESIGN CHECKED BY [illegible]
DETAILED BY J. F. Dorsey & N. L. Gallner
DETAIL CHECKED BY [illegible]

FED. RD. REG. NO.	STATE	FEDERAL AID PROJECT NO.	SHEET NO.	TOTAL SHEETS
1	NEW YORK	I-690-3(28) I-481-2(116)	203	309

INTERSTATE ROUTE CONNECTION 570
BUTTERNUT INTERCHANGE (PHASE 2)
ONONDAGA COUNTY

Notes: Holes for 7/8" ϕ rivets or high strength bolts may be omitted and welding substituted if the Contractor so elects. When the Contractor elects to substitute the welded connection for the bolted connection shown, the amount of welding used shall be equivalent in strength to the bolts removed.
For details of railing see Dwg No. 36.

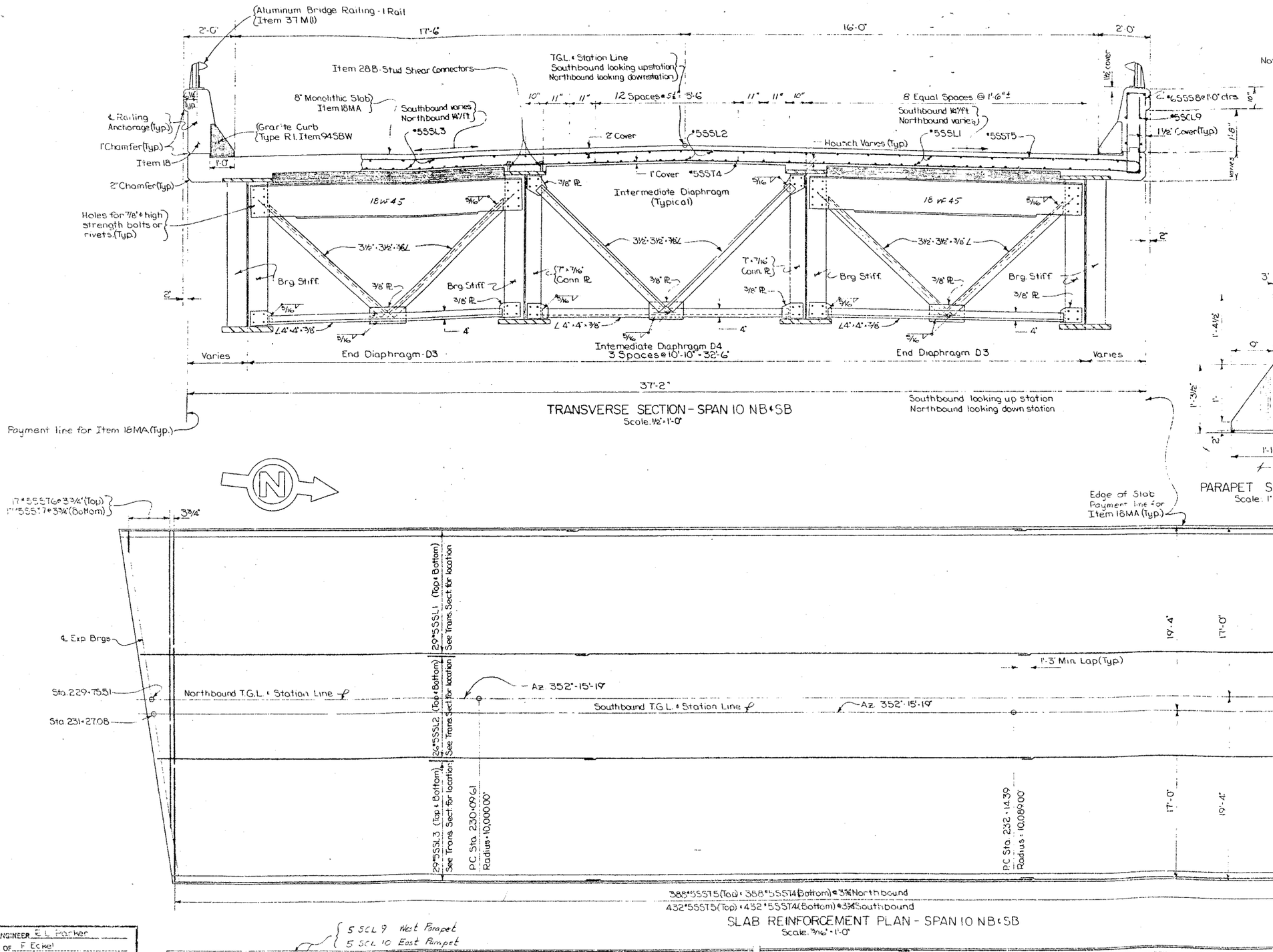

TRANSVERSE SECTION - SPAN 10 NB & SB
Scale: ½" = 1'-0"

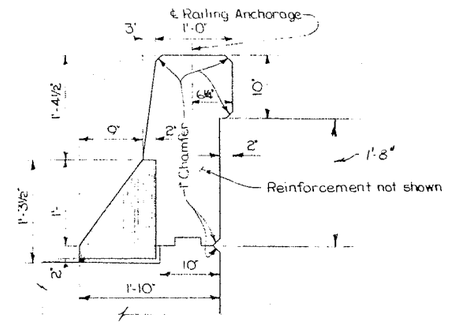

PARAPET SECTION
Scale: 1" = 1'-0"

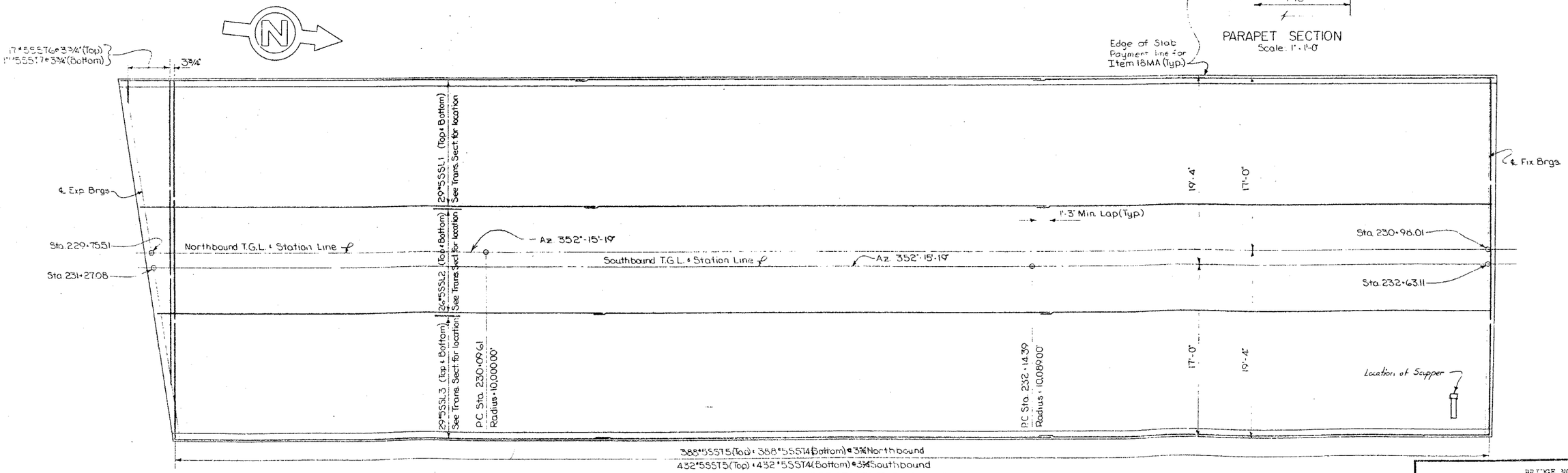

SLAB REINFORCEMENT PLAN - SPAN 10 NB & SB
Scale: 3/16" = 1'-0"

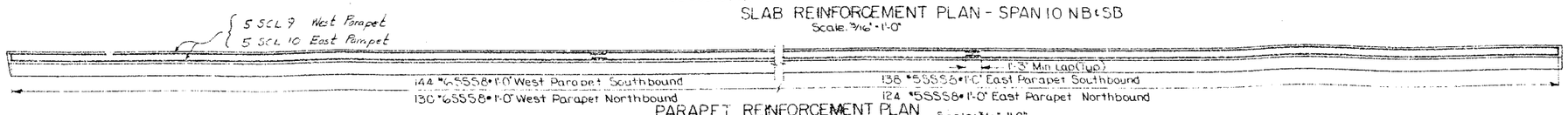

PARAPET REINFORCEMENT PLAN
Scale: 3/16" = 1'-0"

PROJECT ENGINEER E. L. Parker
IN CHARGE OF F. Eckel
DESIGNED BY E. Parker
DESIGN CHECKED BY N. Tsoposes
DETAILED BY J. F. Darcy
DETAIL CHECKED BY J. Gilbert

BRIDGE NO. 2
INTERSTATE ROUTE 481 OVER DEWITT YARDS

SPAN 10 NB & SB

DRAWING NO. 25 OF 31

FED. RD. REG. NO.	STATE	FEDERAL AID PROJECT NO.	SHEET NO.	TOTAL SHEETS
1	NEW YORK	I-690-3(28) I-481-2(16)	264	509

INTERSTATE ROUTE CONNECTION 690
BUTTERMILK CREEK BRIDGE (BRIDGE 2)
ONONDAGA COUNTY

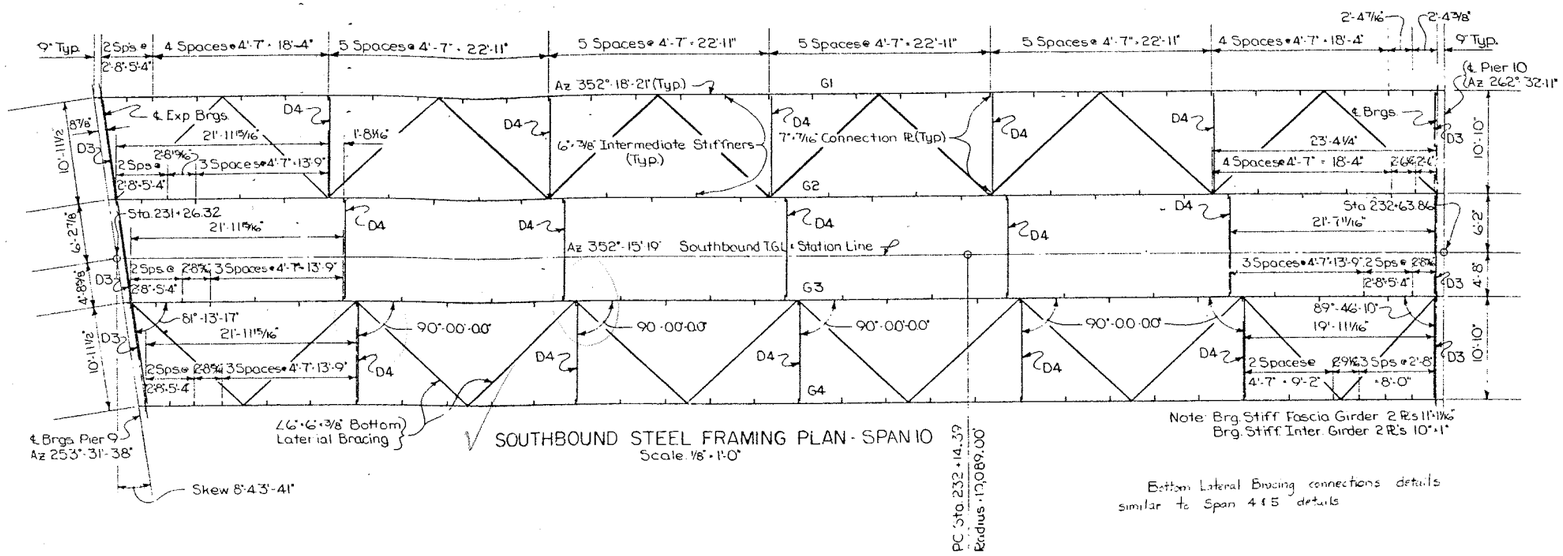

SOUTHBOUND STEEL FRAMING PLAN - SPAN 10
Scale 1/8" = 1'-0"

Note: Brg. Stiff. Fascia Girder 2 Pl's 11'-11 1/16"
Brg. Stiff. Inter. Girder 2 Pl's 10" x 1"

Bottom Lateral Bracing connections details similar to Span 4 & 5 details

BOTTOM OF SLAB ELEVATIONS

SOUTHBOUND

GIRDER	SPAN	℄ EXP. BRGS.	℄ SPAN	℄ FIX. BRGS.
G1	10	443.54	442.46	441.26
G2	10	443.72	442.49	441.15
G3	10	443.70	442.40	440.99
G4	10	443.45	442.16	440.77

NORTHBOUND

GIRDER	SPAN	℄ EXP. BRGS.	℄ SPAN	℄ FIX. BRGS.
G1	10	443.50	442.49	441.39
G2	10	443.56	442.42	441.19
G3	10	443.43	442.24	440.98
G4	10	443.17	442.00	440.75

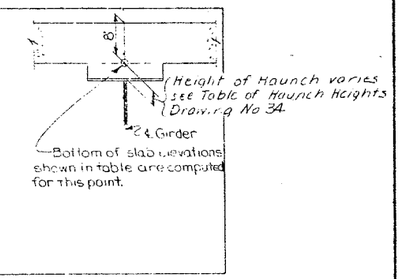

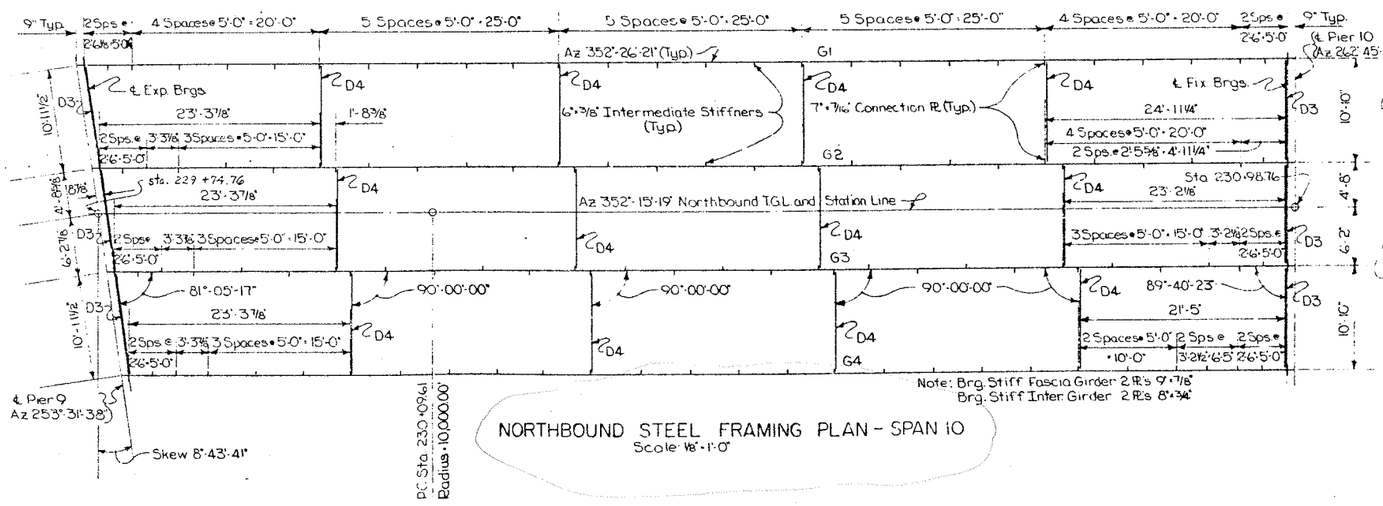

NORTHBOUND STEEL FRAMING PLAN - SPAN 10
Scale 1/8" = 1'-0"

Note: Brg. Stiff. Fascia Girder 2 Pl's 9" x 7/16"
Brg. Stiff. Inter. Girder 2 Pl's 8" x 3/4"

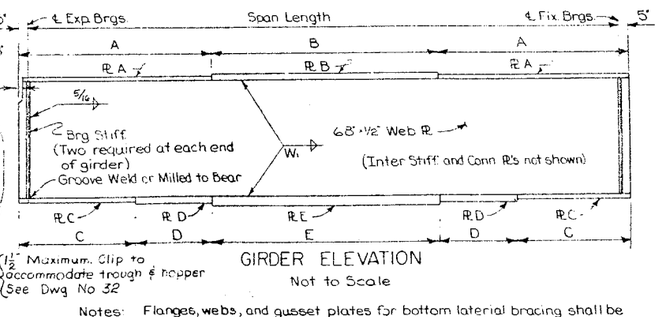

GIRDER ELEVATION
Not to Scale

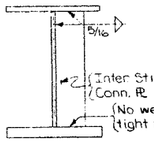

TYPICAL SECTION
Not to Scale

Notes: Flanges, webs, and gusset plates for bottom lateral bracing shall be A.S.T.M. Designation A441 Steel.
Diaphragms, stiffeners, bearings, and bottom lateral bracing (except gusset plates) shall be A.S.T.M. Designation A36 Steel.

WELD SIZE TABLE

Thickness of Flange	W1 Size of fillet weld joining web to flange
1 1/2" and under	5/16"
over 1 1/2" to 2 1/4"	3/8"
over 2 1/4"	1/2"

SPAN 10 GIRDER TABLE

	GIRDER	SPAN LENGTH ℄ TO ℄ BRGS.	FLANGE PLATE SIZES Pl. A	Pl. B	Pl. C	Pl. D	Pl. E	FLANGE PLATE LENGTHS A	B	C	D	E	DEFLECTIONS (FT) STEEL	CONC.	S.D.L.	TOTAL	CAMBER V.C.C. (FT.)	TOTAL (FEET)	TOTAL (INCHES)	STUD SHEAR CONNECTOR SPACING
Southbound	G1	138'-8 13/16"	23" x 1"	23" x 1 1/2"	24" x 1"	24" x 2"	24" x 2 1/2"	36'-9 7/16"	66'-0"	20'-3 7/16"	19'-0"	61'-0"	0.10	0.15	0.11	0.36	.06	0.42'	5"	138 Spaces @ 12" = 138'-0"
	G2	137'-0 3/16"	19" x 7/8"	19" x 1 1/2"	24" x 1"	None	24" x 2"	32'-11 1/16"	72'-0"	23'-5 1/16"	0	91'-0"	0.11	0.28	0.04	0.43	.06	0.49	5 7/8"	137 Spaces @ 12" = 137'-0"
	G3	135'-3 5/8"	19" x 7/8"	19" x 1 1/2"	24" x 1"	None	24" x 2"	32'-0 9/16"	72'-0"	22'-6 9/16"	0	91'-0"	0.10	0.27	0.04	0.41	.05	0.46	5 1/2"	135 Spaces @ 12" = 135'-0"
	G4	133'-7"	23" x 1"	23" x 1 1/2"	24" x 1"	24" x 2"	24" x 2 1/2"	34'-2 1/2"	66'-0"	17'-8 1/2"	19'-0"	61'-0"	0.09	0.13	0.09	0.31	.05	0.36	4 3/8"	133 Spaces @ 12" = 133'-0"
Northbound	G1	125'-0 1/4"	17" x 3/4"	17" x 1 1/2"	24" x 1"	None	24" x 2"	28'-11 1/8"	68'-0"	21'-5 1/8"	0	83'-0"	0.07	0.12	0.09	0.28	.05	0.33	4"	125 Spaces @ 12" = 125'-0"
	G2	123'-3 1/8"	14" x 3/4"	14" x 1 1/2"	23" x 1"	None	23" x 1 1/2"	27'-6 9/16"	69'-0"	28'-0 9/16"	0	68'-0"	0.08	0.24	0.03	0.35	.05	0.40	4 3/4"	123 Spaces @ 12" = 123'-0"
	G3	121'-6"	14" x 3/4"	14" x 1 1/2"	23" x 1"	None	23" x 1 1/2"	26'-8"	69'-0"	27'-2"	0	68'-0"	0.07	0.23	0.03	0.33	.04	0.37	4 1/2"	121 Spaces @ 12" = 121'-0"
	G4	119'-8 7/8"	17" x 3/4"	17" x 1 1/2"	24" x 1"	None	24" x 2"	26'-3 7/16"	68'-0"	18'-9 7/16"	0	83'-0"	0.06	0.10	0.08	0.24	.04	0.28	3 3/8"	119 Spaces @ 12" = 119'-0"

G4 33.54 17.24
G1 28.51 21.01
G2 27.13 27.63
G3 26.25 26.75
G4 25.8698 18.3698

S.D.L. = superimposed dead load, includes weight of railing and parapet.
V.C.C. = vertical curve correction

PROJECT ENGINEER R. L. Parker
IN CHARGE OF F. Eckel
DESIGNED BY S. Rowe
DESIGN CHECKED BY Tippett & Smith
DETAILED BY J. F. Darcy
DETAIL CHECKED BY [illegible]

BRIDGE NO. 2
INTERSTATE ROUTE 481 OVER DEWITT YARDS

SPAN 10 NB & SB

DRAWING NO. 26 OF 50

FED. RD. REG. NO.	STATE	FEDERAL AID PROJECT NO.	SHEET NO.	TOTAL SHEETS
1	NEW YORK	I-88(-9)(13) I-481-2(116)	205	309

INTERSTATE ROUTE CONNECTION 570
BUTTERNUT INTERCHANGE (PHASE 2)
ONONDAGA COUNTY

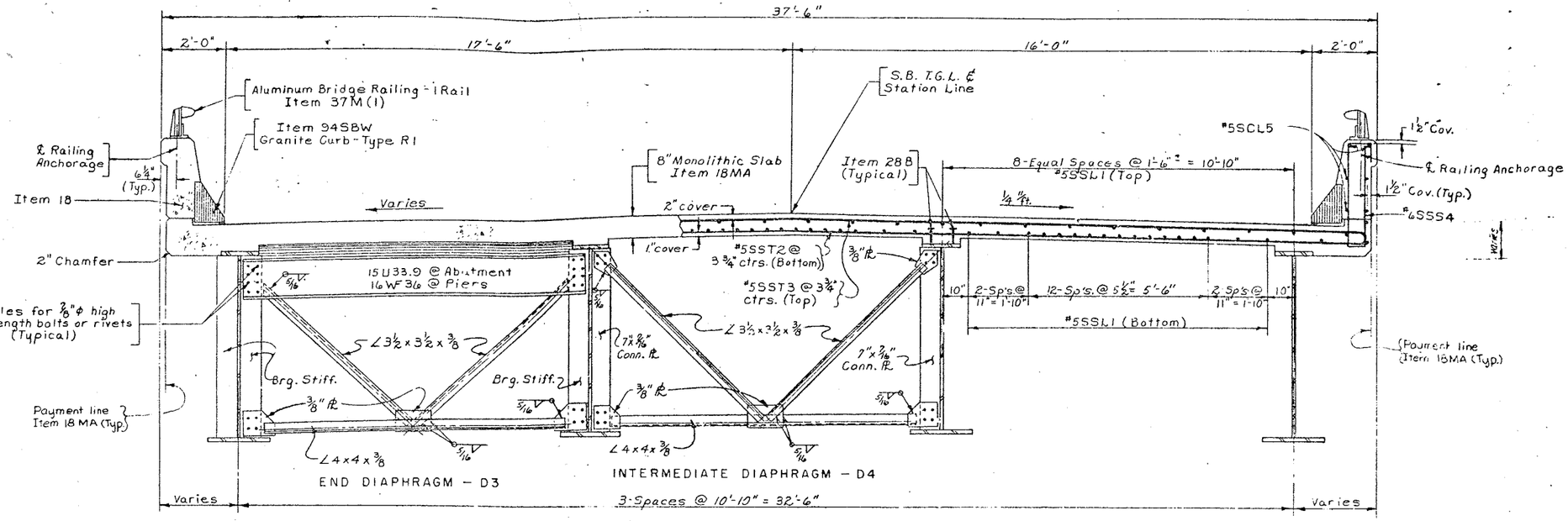

TRANSVERSE SECTION SOUTHBOUND SPANS 11,12,13,14 & 15
Scale: ½" = 1'-0"

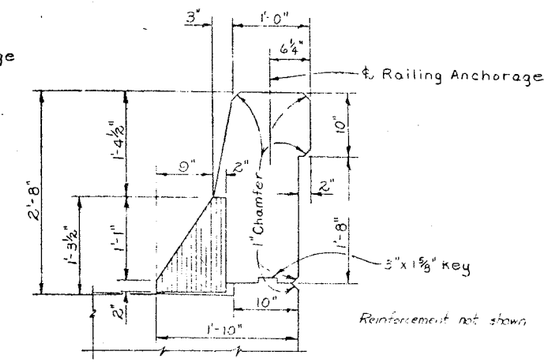

PARAPET DETAIL
Scale: 1" = 1'-0"

PARAPET REINFORCEMENT PLAN (Not to Scale)

Note: East parapet shown, West parapet similar by rotation.

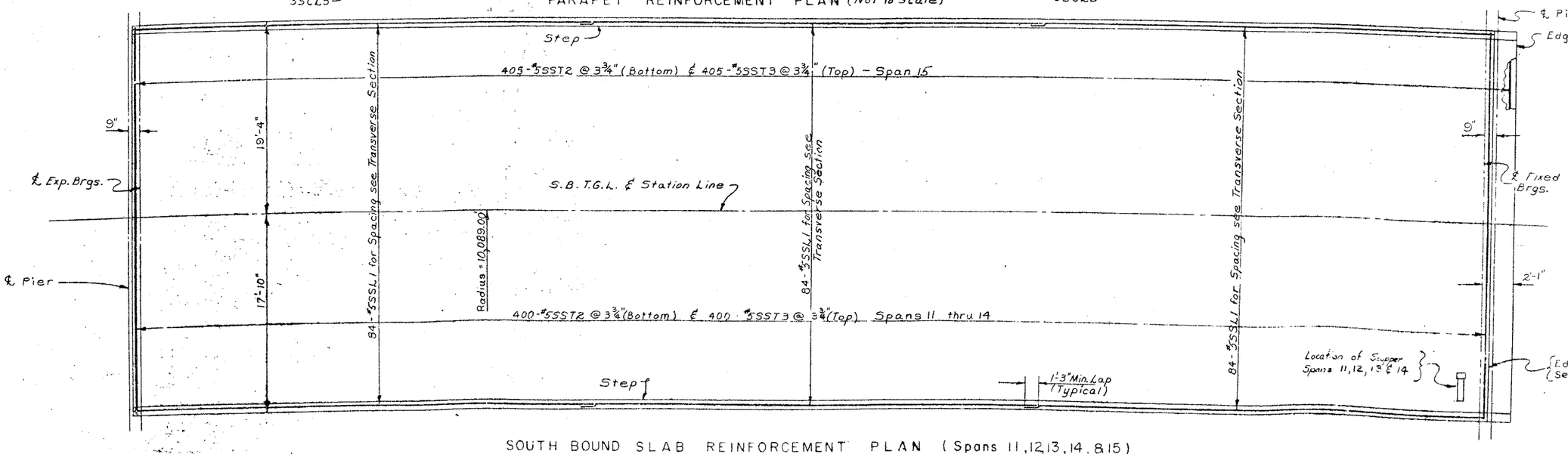

SOUTH BOUND SLAB REINFORCEMENT PLAN (Spans 11,12,13,14 & 15)
Scale: 3/16" = 1'-0"

Notes:

Holes for ⅞"ϕ rivets or high strength bolts may be omitted and welding substituted if contractor so elects. When the contractor elects to substitute the welded connection for the bolted connection shown, the amount of welding used shall be equivalent in strength to the bolts removed.

For details of Railing, Railing Anchorage and Granite Curbs see Dwgs. #35 and 36. For Joint Details see Dwg. #33 & 34.

PROJECT ENGINEER R. Parker
IN CHARGE OF J. B. Sherman
DESIGNED BY D. H. Smith
DESIGN CHECKED BY S. Rowe
DETAILED BY J. C. Thompson
DETAIL CHECKED BY [illegible]

BRIDGE NO. 2
INTERSTATE ROUTE 481 OVER DEWITT YARDS

SPANS 11 THRU 15 SOUTHBOUND

DRAWING NO. 37 OF 50

FED. RD. REG. NO.	STATE	FEDERAL AID PROJECT NO.	SHEET NO	TOTAL SHEETS
1	NEW YORK	I-690-3(28) I-481 2(18)	206	309

INTERSTATE ROUTE CONNECTION STO
DEWITT [illegible] (PHASE 2)
ONONDAGA COUNTY

TABLE OF STATIONS

SPAN	STATION "A" STATION	STATION "A" ℄	STATION "B" STATION	STATION "B" ℄	STATION "C" STATION	STATION "C" ℄
11 S.B.	232+63.86	℄ Pier #9 S.B.	233+88.86	℄ Pier #10 S.B.	—	—
12 S.B.	233+88.86	℄ Pier #10 S.B.	235+13.86	℄ Pier #11 S.B.	—	—
13 S.B.	235+13.86	℄ Pier #11 S.B.	236+38.86	℄ Pier #12 S.B.	—	—
14 S.B.	236+38.86	℄ Pier #12 S.B.	237+63.86	℄ Pier #13 S.B.	—	—
15 S.B.	237+63.86	℄ Pier #13 S.B.	—	—	238+88.11	℄ Fixed Brgs No. Abut. (S.B.)

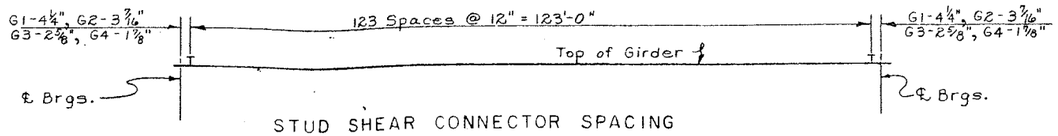

STUD SHEAR CONNECTOR SPACING
Not to Scale

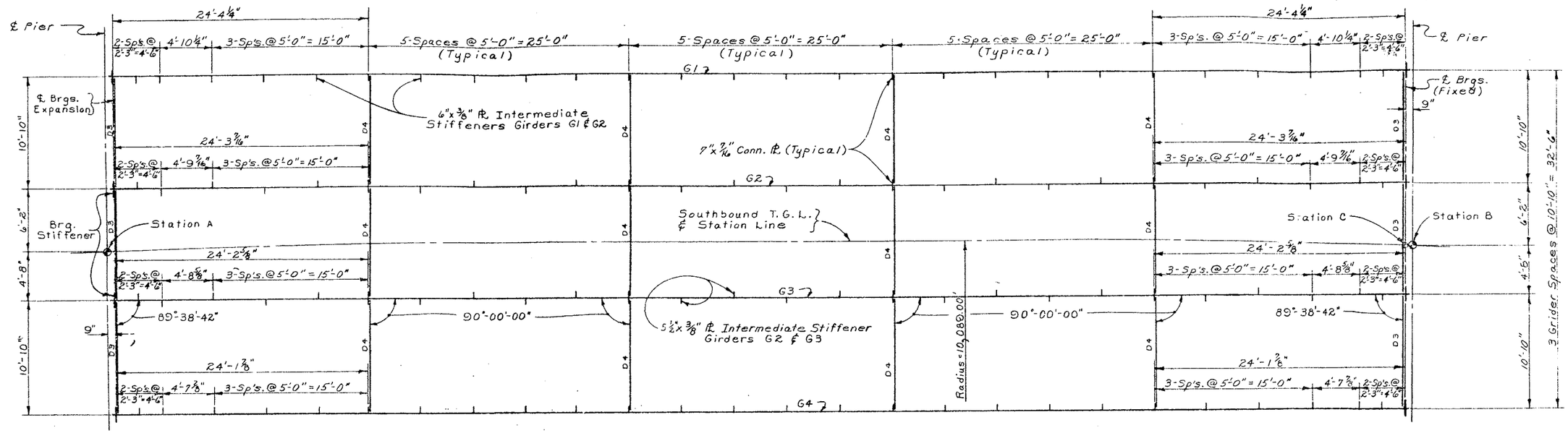

Note:
See Transverse Section for Diaphragms.

STEEL FRAMING PLAN (SPANS 11, 12, 13, 14 & 15 SOUTHBOUND)
Scale: 3/16" = 1'-0"

Notes:

Web and flanges shall be A.S.T.M. designation A441 Steel.

Stiffeners, connection plates, and diaphragms shall be A.S.T.M. designation A36 Steel.

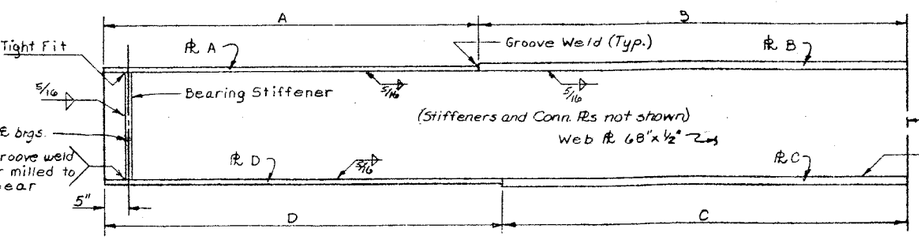

GIRDER ELEVATION
Not to Scale

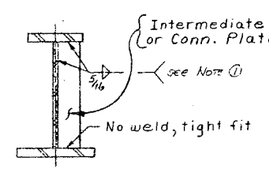

TYPICAL SECTION
Not to Scale

Note ①: Where connection plates are used in pairs, the fillet weld at top of stiffener is optional. See Note "Sup 4" in the Superstructure Notes.

THEO. BOTTOM OF SLAB ELEV. (Southbound)

GIRDER	SPAN	℄ So. Brg.	℄ Span	℄ No. Brg.
G1	11	441.24	440.03	438.56
G2	11	441.12	439.30	438.33
G3	11	440.96	439.58	438.11
G4	11	440.74	439.35	437.88
G1	12	438.52	436.95	435.30
G2	12	438.29	436.73	435.07
G3	12	438.07	436.50	434.85
G4	12	437.84	436.27	434.62
G1	13	435.66	433.51	431.67
G2	13	435.03	433.28	431.45
G3	13	434.81	433.06	431.22
G4	13	434.58	432.83	431.00
G1	14	431.63	429.72	427.89
G2	14	431.40	429.49	427.66
G3	14	431.18	429.26	427.44
G4	14	430.95	429.04	427.21
G1	15	427.85	426.16	424.62
G2	15	427.62	425.93	424.39
G3	15	427.40	425.71	424.16
G4	15	427.17	425.48	423.94

SPAN	GIRDER	DEFLECTIONS (ft.) STEEL	SLAB	SDL	TOTAL	CAMBER VCC (ft)	TOTAL (ft)	TOTAL (in.)
Spans 11, 12 & 13 (S.B.)	G1 and G4	.07	.12	.08	.27	.04	.31	3¾
	G2 and G3	.08	.24	.03	.35	.04	.39	4⅝
Span 14 (S.B.)	G1 and G4	.07	.12	.08	.27	.05	.22	2⅝
	G2 and G3	.08	.24	.03	.35	-.05	.30	3⅝
Span 15 (S.B.)	G1 and G4	.07	.12	.08	.27	-.07	.20	2⅜
	G2 and G3	.08	.24	.03	.35	-.07	.28	3⅜

S.D.L. = Superimposed Dead Load (includes weight of parapet and railing.)

V.C.C. = Vertical Curve Correction

TABLE OF AZIMUTHS

LOCATION	AZIMUTHS
℄ Pier #10 (S.B.)	262°-32'-11"
℄ Pier #11 (S.B.)	263°-14'-46"
℄ Pier #12 (S.B.)	263°-57'-22"
℄ Pier #13 (S.B.)	264°-39'-57"
℄ Pier #14 (S.B.)	265°-22'-33"
℄ Fixed Brgs. @ North Abut. (S.B.)	266°-05'-08"
℄ Girders, Span 11 (SB)	352°-53'-28"
℄ Girders, Span 12 (S.B.)	353°-36'-04"
℄ Girders, Span 13 (S.B.)	354°-18'-40"
℄ Girders, Span 14 (S.B.)	355°-01'-15"
℄ Girders, Span 15 (S.B.)	355°-43'-51"

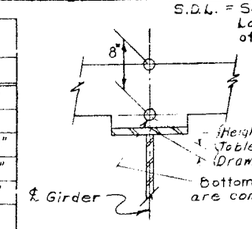

SOUTHBOUND GIRDER TABLE — SPANS 11 thru 15

GIRDER	SPAN C. to C. BRGS.	FLANGE SIZES PL A	PL B	PL C	PL D	FLANGE DIMENSIONS A	B	C	D	Brg. Stiffener 2-Ls. required each end of Girder	Intermediate Stiffener Size
G1	123'-8½"	16"x¾"	16"x1½"	23"x2"	23"x1"	28'-9¼"	33'-6"	40'-6"	21'-5¼"	9"x⅞"	6"x⅜"
G2	123'-6 15/16"	13"x¾"	13"x1½"	22"x1½"	22"x1"	28'-8 7/16"	33'-6"	33'-6"	28'-8 7/16"	8"x¾"	5½"x⅜"
G3	123'-5 5/16"	13"x¾"	13"x1½"	22"x1½"	22"x1"	28'-7⅝"	33'-6"	33'-6"	28'-7⅝"	8"x¾"	5½"x⅜"
G4	123'-3 11/16"	16"x¾"	16"x1½"	23"x2"	23"x1"	28'-6⅞"	33'-6"	40'-6"	21'-6⅞"	9"x⅞"	6"x⅜"

BRIDGE NO. 2
INTERSTATE ROUTE 481 OVER DEWITT YARDS

SPANS 11 THRU 15 SOUTHBOUND

DRAWING NO. 28 OF 50

PROJECT ENGINEER R. Parker
IN CHARGE OF J. B. Sherman
DESIGNED BY N. J. Toppses
DESIGN CHECKED BY S. Rowe
DETAILED BY J. C. Thompson
DETAIL CHECKED BY [illegible]

FED. RD. REG. NO.	STATE	FEDERAL AID PROJECT NO.	SHEET NO.	TOTAL SHEETS
1	NEW YORK	I-690-3(28) I-481-2(1)(2)	207	309

INTERSTATE ROUTE CONNECTION 570
BUTTERNUT INTERCHANGE (PHASE 2)
ONONDAGA COUNTY

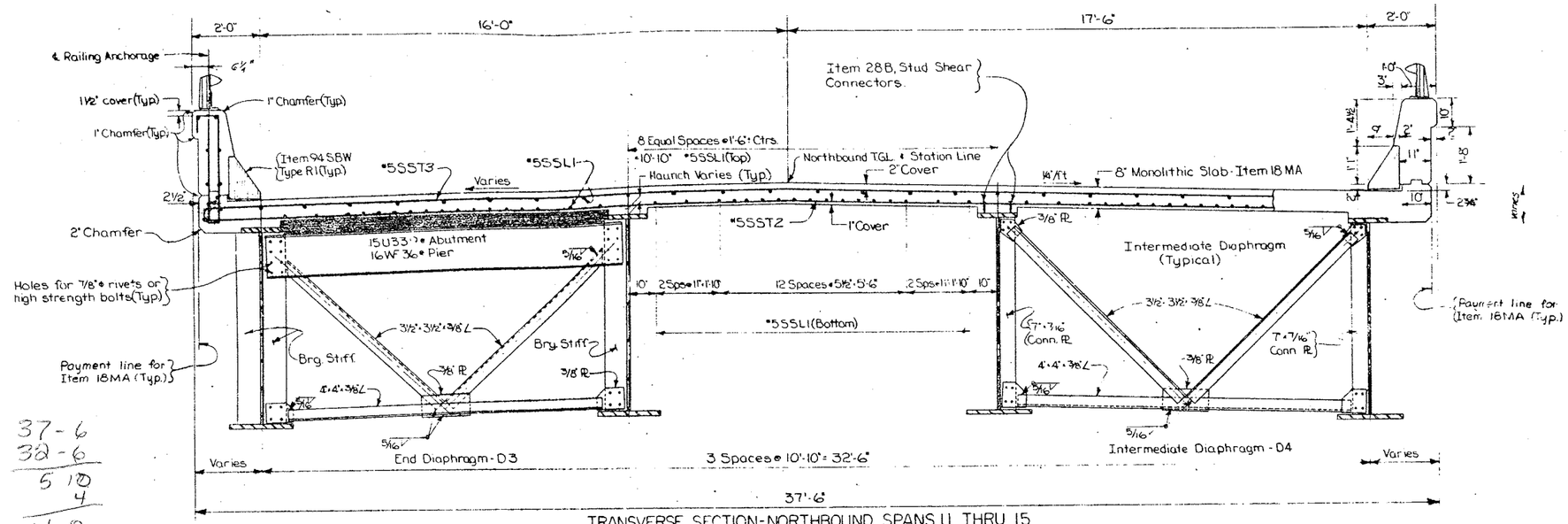

TRANSVERSE SECTION - NORTHBOUND SPANS 11 THRU 15
Scale ½" = 1'-0"

37-6
32-6
5 10
4
4-8
2-4

Notes:
Holes for 7/8" ϕ rivets or high strength bolts may be omitted and welding substituted if the contractor so elects. When the contractor elects to substitute the Welded Connection for the Bolted Connection shown, the amount of welding used shall be equivalent in strength to the bolts removed.

For details of Railing, Railing Anchorage, Granite Curbs and Joint Details, See Misc Detail Sheets.

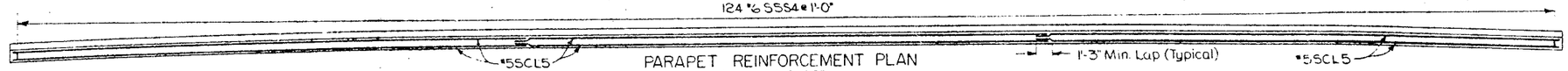

PARAPET REINFORCEMENT PLAN
Scale: 3/16" = 1'-0"

Note: West parapet shown
East parapet similar

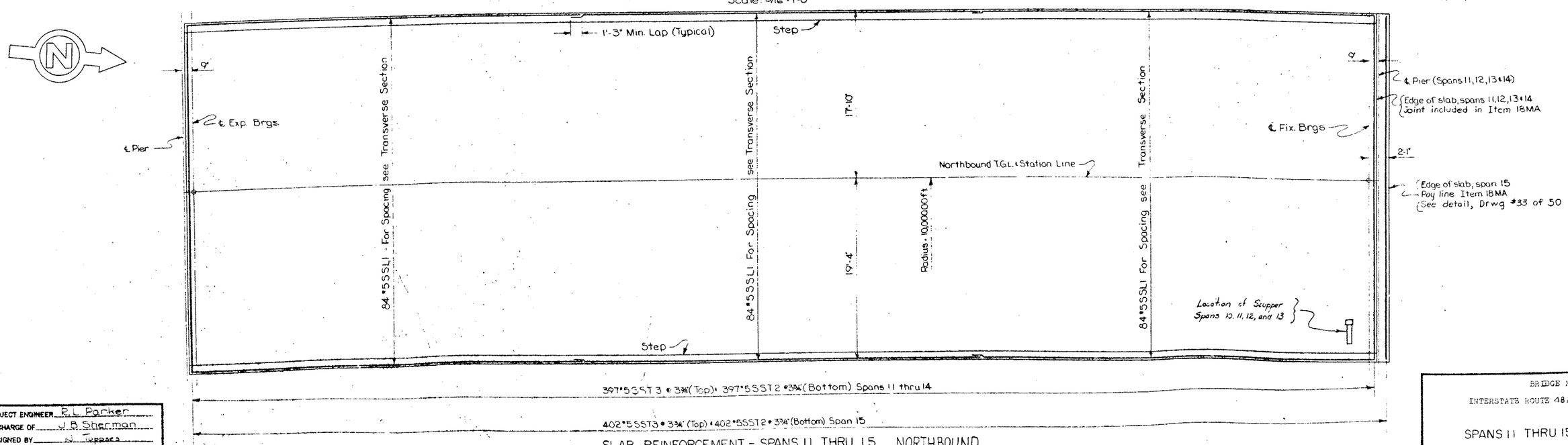

SLAB REINFORCEMENT - SPANS 11 THRU 15 NORTHBOUND
Scale: 3/16" = 1'-0"

PROJECT ENGINEER R. L. Parker
IN CHARGE OF J. B. Sherman
DESIGNED BY N. Terrace
DESIGN CHECKED BY R. Smith
DETAILED BY J. F. Darcy
DETAIL CHECKED BY J. W. Eble

BRIDGE NO. 2
INTERSTATE ROUTE 481 OVER DEWITT YARDS

SPANS 11 THRU 15 NORTHBOUND

DRAWING NO. 29 OF 50

F.I.S.H. 70-7

FED. RD. REG. NO.	STATE	FEDERAL AID PROJECT NO.	SHEET NO.	TOTAL SHEETS
1	NEW YORK	I-690-3(23) I-481-2(113)	208	309

INTERSTATE ROUTE CONNECTION 570
BUTTERNUT INTERCHANGE (PHASE 2)
ONONDAGA COUNTY

345-5584

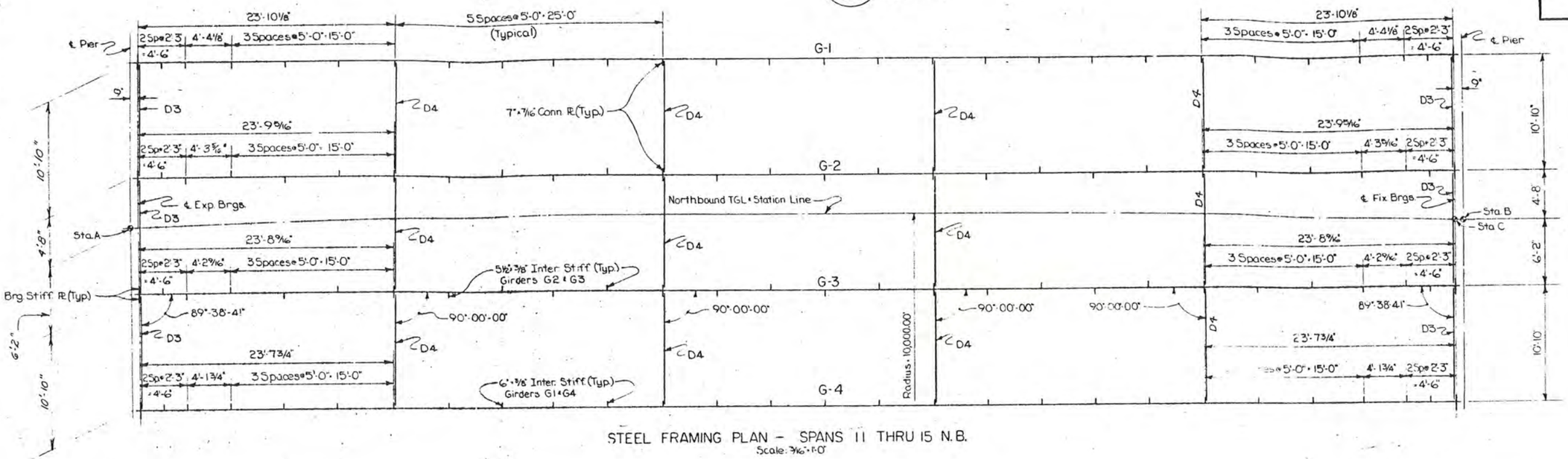

STEEL FRAMING PLAN – SPANS 11 THRU 15 N.B.
Scale: 3/16" = 1'-0"

TABLE OF AZIMUTHS	
LOCATION	AZIMUTH
℄ Pier #10 N.B.	262°-45'-57"
℄ Pier #11 N.B.	263°-28'-36"
℄ Pier #12 N.B.	264°-11'-13"
℄ Pier #13 N.B.	264°-53'-51"
℄ Pier #14 N.B.	265°-36'-28"
℄ Fixed Bearings @ North Abutment N.B.	266°-19'-06"
℄ girders, Span 11 N.B.	353°-07'-17"
℄ girders, Span 12 N.B.	353°-49'-55"
℄ girders, Span 13 N.B.	354°-32'-32"
℄ girders, Span 14 N.B.	355°-15'-10"
℄ girders, Span 15 N.B.	355°-57'-47"

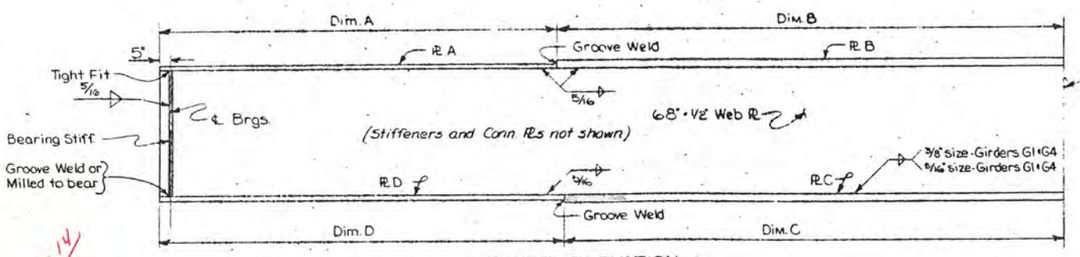

GIRDER ELEVATION
Not to Scale

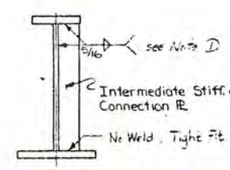

SECTION

Web and flanges shall be A.S.T.M. Designation A441 Steel. Stiffeners, connection plates and diaphragms shall be A.S.T.M. Designation A36 Steel.

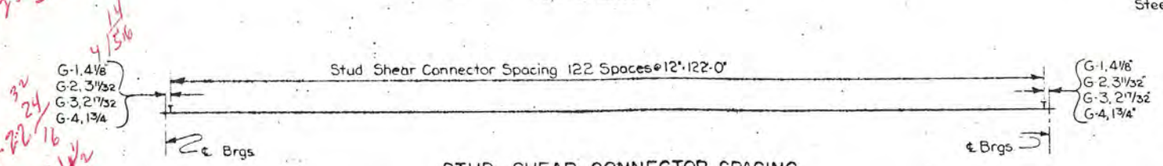

STUD SHEAR CONNECTOR SPACING
Not to Scale

Note ①: Where connection plates are used in pairs, the fillet weld at top of stiffener is optional. See Note "Sup 4" in the Superstructure Notes.

BOTTOM OF SLAB ELEVATIONS				
NORTHBOUND				
GIRDER	SPAN	℄ EXP. BRGS.	℄ SPAN	℄ FIX. BRGS.
G-1	11	441.36	440.02	438.57
G-2	11	441.16	439.80	438.34
G-3	11	440.94	439.57	438.12
G-4	11	440.72	439.34	437.89
G-1	12	438.53	436.98	435.34
G-2	12	438.30	436.75	435.12
G-3	12	438.08	436.52	434.89
G-4	12	437.85	436.30	434.66
G-1	13	435.30	433.57	431.75
G-2	13	435.07	433.34	431.53
G-3	13	434.85	433.12	431.30
G-4	13	434.62	432.89	431.08
G-1	14	431.71	429.80	427.98
G-2	14	431.48	429.57	427.75
G-3	14	431.26	429.34	427.53
G-4	14	431.03	429.12	427.30
G-1	15	427.93	426.25	424.71
G-2	15	427.71	426.02	424.48
G-3	15	427.48	425.80	424.26
G-4	15	427.26	425.57	424.03

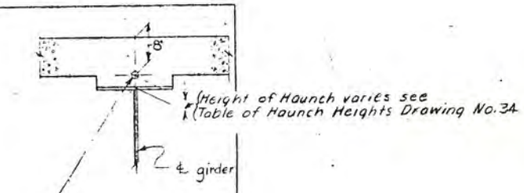

NORTHBOUND GIRDER TABLE – SPANS 10 THRU 14											
	SPAN LENGTH	FLANGE SIZE				FLANGE DIMENSIONS				BEARING STIFF. 2 PLs Required at each end of girder	INTERMEDIATE STIFFENER SIZE
GIRDER	℄ TO ℄ BEARINGS	PL A	PL B	PL C	PL D	A	B	C	D		
G1	122'-8 9/16"	16" x 3/4"	16" x 1 1/2"	23" x 2"	23" x 1"	23'-3 1/8"	33'-6"	40'-6"	21'-3 1/8"	9" x 7/8"	6" x 3/8"
G2	122'-6 11/16"	13" x 3/4"	13" x 1 1/2"	22" x 1 1/2"	22" x 1"	28'-2 5/8"	33'-6"	33'-6"	28'-2 5/8"	8" x 3/4"	5 1/2" x 3/8"
G3	122'-5 1/16"	13" x 3/4"	13" x 1 1/2"	22" x 1 1/2"	22" x 1"	28'-1 9/16"	33'-6"	33'-6"	28'-1 9/16"	8" x 3/4"	5 1/2" x 3/8"
G4	122'-3 7/16"	16" x 3/4"	16" x 1 1/2"	23" x 2"	23" x 1"	28'-0 3/4"	33'-6"	40'-6"	21'-0 3/4"	9" x 7/8"	6" x 3/8"

27.84
27.78
27.71

20.84
27.84

	DEFLECTIONS (FT.)				CAMBER		
SPAN	GIRDER	STEEL	SLAB	S.D.L.	TOTAL	V.C.C. (FT.)	TOTAL FT.	TOTAL IN.
Spans 11, 12 & 13 Northbound	G1 & G4	.07	.12	.08	.27	.04	.31	3 3/4"
	G2 & G3	.08	.24	.03	.35	.04	.39	4 5/8"
Span 14 Northbound	G1 & G4	.07	.12	.08	.27	-.04	.23	2 3/4"
	G2 & G3	.08	.24	.03	.35	-.04	.31	3 3/4"
Span 15 Northbound	G1 & G4	.07	.12	.08	.27	-.07	.20	2 3/8"
	G2 & G3	.08	.24	.03	.35	-.07	.28	3 3/8"

V.C.C. - Vertical Curve Camber
S.D.L. (Superimposed Dead Load) - Includes weight of parapet & railing.

TABLE OF STATIONS						
SPAN	STATION A		STATION B		STATION C	
	STATION	℄	STATION	℄	STATION	℄
11 (NB)	230+98.76	℄ Pier #10 (NB)	232+22.76	℄ Pier #11 (NB)	—	—
12 (NB)	232+22.76	℄ Pier #11 (NB)	233+46.76	℄ Pier #12 (NB)	—	—
13 (NB)	233+46.76	℄ Pier #12 (NB)	234+70.76	℄ Pier #13 (NB)	—	—
14 (NB)	234+70.76	℄ Pier #13 (NB)	235+94.76	℄ Pier #14 (NB)	—	—
15 (NB)	235+94.76	℄ Pier #14 (NB)	—	—	237+18.01	℄ Fix Brgs N.A. (NB)

PROJECT ENGINEER R. L. Parker
CHARGE OF J. B. Sherman
DESIGNED BY J. Tapper
DESIGN CHECKED BY D. Smith
DETAILED BY J. F. Darcy
DETAIL CHECKED BY J. W. Fobel

BRIDGE NO. 2
INTERSTATE ROUTE 481 OVER DEWITT YARDS

SPANS 11 THRU 15 NORTHBOUND

DRAWING NO. 30 OF 50

FED. RD. REG. NO.	STATE	FEDERAL AID PROJECT NO.	SHEET NO.	TOTAL SHEETS
1	NEW YORK	~~I-690-3(48)~~ I-481-2(16)	209	309

INTERSTATE ROUTE CONNECTION 570
BUTTERNUT INTERCHANGE (PHASE 2)
ONONDAGA COUNTY

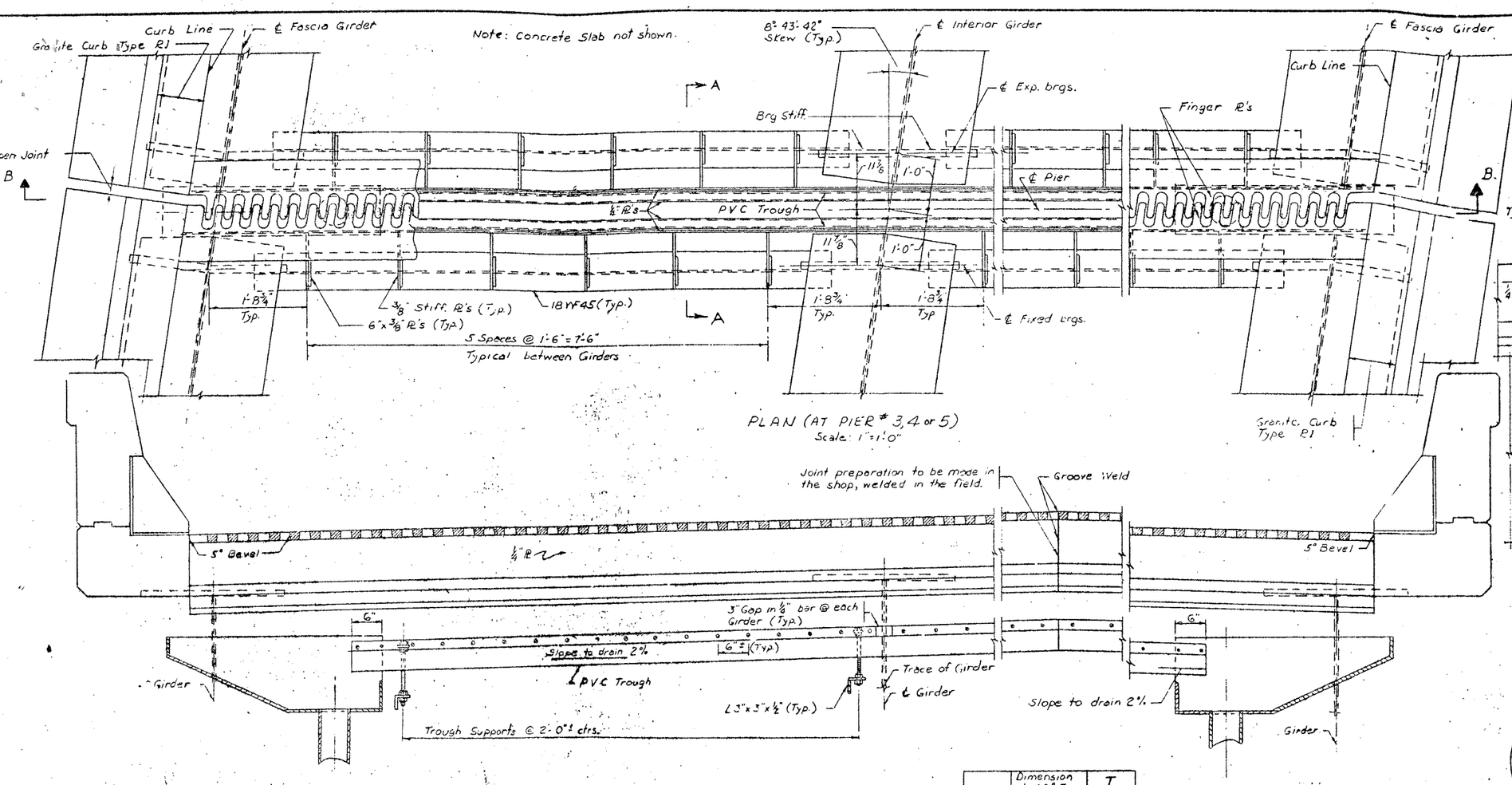

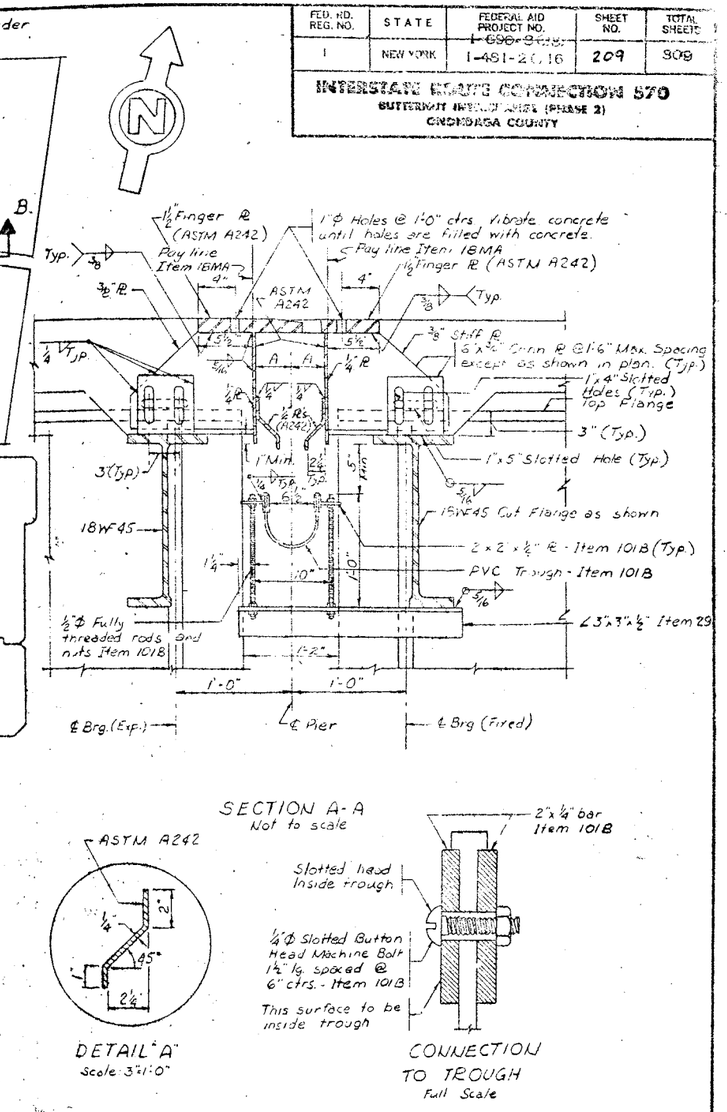

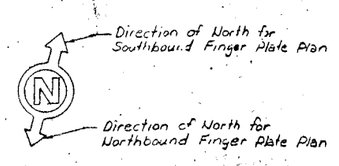

SECTION B-B
Scale: 1" = 1'-0"

	Dimension at 68° F	T
"A"	4 11/16"	5/32"
"B"	1 7/8"	5/32"

T is the decrease in the dimension for every 10° F rise in temperature (and the increase in the dimension for every 10° F fall in temperature)

SECTION A-A
Not to scale

DETAIL "A"
Scale: 3" = 1'-0"

CONNECTION TO TROUGH
Full Scale

NOTES:
Finger R's shall follow slope and grade of roadway. All steel shall be Item 29 unless otherwise indicated.
The 1/2" finger plates, the 1/4" vertical side plates, and 1/4" bent deflector plates shall be corrosion resistant steel A.S.T.M. Designation A242.

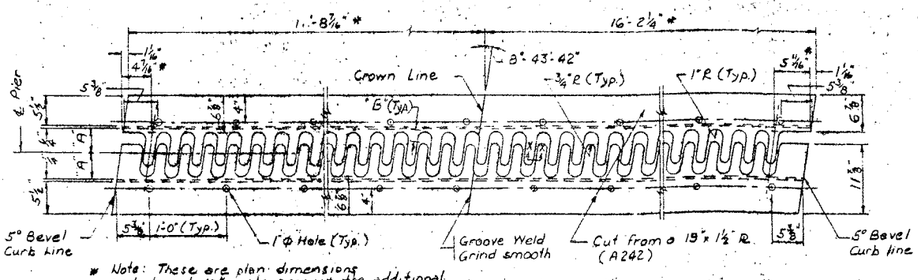

* Note: These are plan dimensions and do not take into account the additional length needed due to the cross slope and profile of the roadway.

FINGER PLATE PLAN
Scale: 1" = 1'-0"

SECTION X-X
No Scale

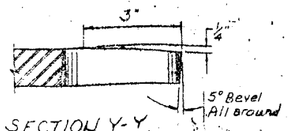

SECTION Y-Y
No Scale

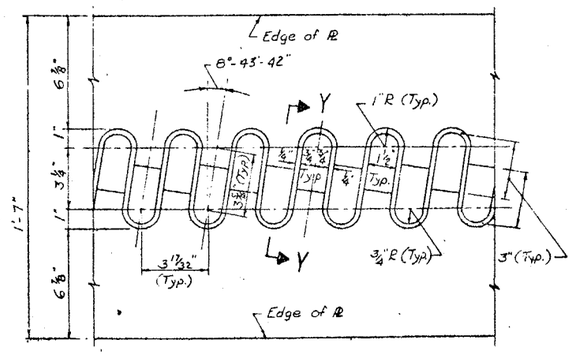

FINGER DETAIL
Scale: 3" = 1'-0"

PROJECT ENGINEER	R. Parker
IN CHARGE OF	V. Sherman
DESIGNED BY	N.A. Toppses
DESIGN CHECKED BY	F. Eckel
DETAILED BY	N.A. Toppses
DETAIL CHECKED BY	J. Kutcal

BRIDGE NO. 2
INTERSTATE ROUTE 481 OVER DEWITT YARDS

FINGER JOINT AT PIERS 3,4 & 5

DRAWING NO. 31 OF 50

FED. RD. REG. NO.	STATE	FEDERAL AID PROJECT NO.	SHEET NO.	TOTAL SHEETS
1	NEW YORK	I-690-3(23) I-481-2(16)	210	909

INTERSTATE ROUTE CONNECTION 570
BUTTERNUT INTERCHANGE (PHASE 2)
ONONDAGA COUNTY

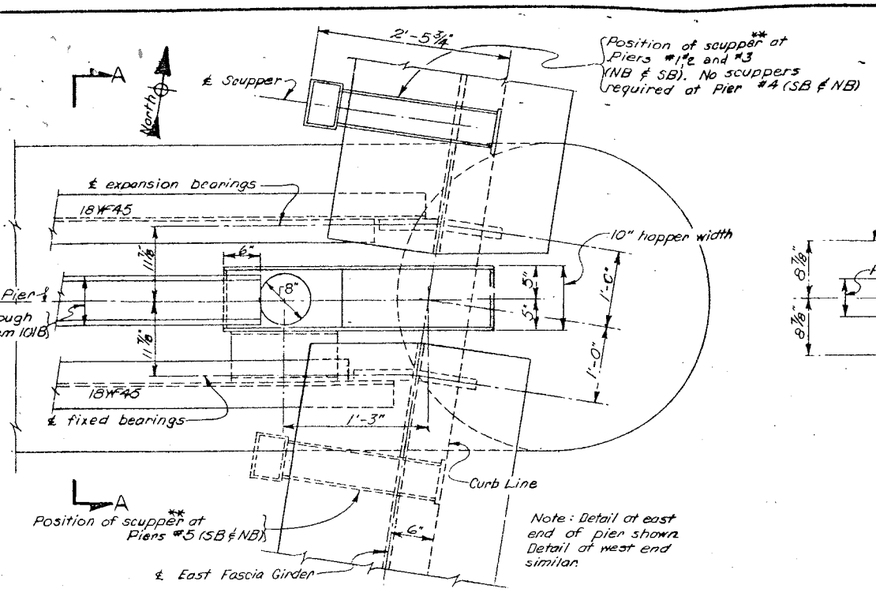

PLAN AT EAST END, PIERS 1,2,3,4 & 5 (NB & SB)

Scale: 1" = 1'-0"

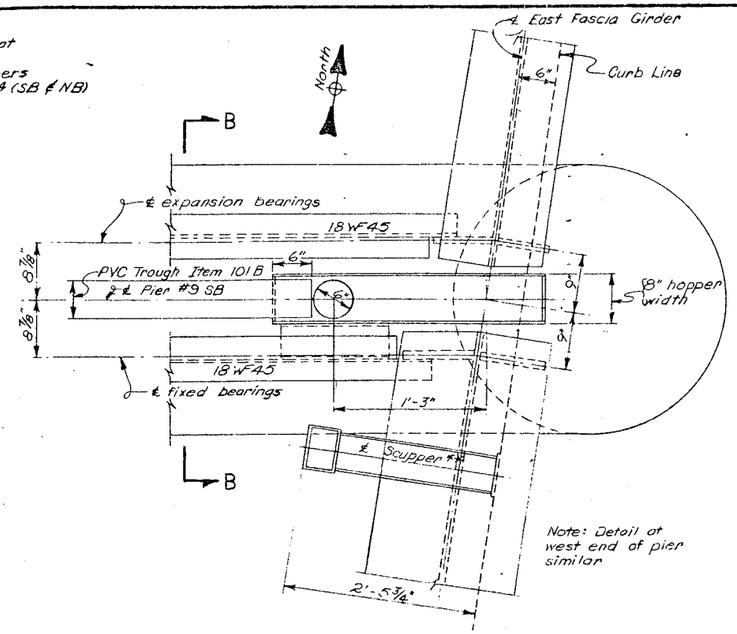

PLAN AT EAST END OF PIER #9 SOUTHBOUND

Scale: 1" = 1'-0"

** Adjust exact location of scuppers which drain into downspouts systems so as to accommodate the location of the downspouts.
Adjust exact location of scuppers which drain directly onto the ground so as not to spill on piers or onto diaphragms

Hoppers and downspouts (including all necessary pipe supports, hangers, and fittings) shall be paid for under Item 13DE-6 & Item 13DE-8.

Hopper shall be fabricated from steel plates, 3/8 inch thick, A.S.T.M. Designation A36 Steel. Hopper shall be galvanized after fabrication is complete in accordance with M19.

All bends in downspouts will be long radius bends. All indicated slopes on horizontal pipe runs will be the minimum allowed, and the long radius bends will be fabricated to take this slope into account. All costs involved will be included in the price bid for Item 13DE-6 & Item 13DE-8

PIER NO.	JOINTS: EXP. JT. SEALED WITH PREFORMED JOINT SEALER	JOINTS: OPEN JOINT WITH HOPPER AND TROUGH	JOINTS: FINGER JOINT WITH HOPPER AND TROUGH	SCUPPER **	DOWNSPOUT
1		✓		(East & West curb lines) (North side of Pier)	✓ (8" dia)
2		✓		(East & West curb lines) (North side of Pier)	✓ (8" dia)
3			✓	(East & West curb lines) (North side of Pier)	✓ (8" dia)
4			✓	None	✓ (8" dia.)
5			✓	(East & West curb lines) (South side of Pier)	✓ (8" dia)
6	✓			(East & West curb lines) (South side of Pier)	✓ (8" dia)
7	✓			(East & West curb lines) (South side of Pier)	✓ (8" dia.)
8	✓			(East & West curb lines) (South side of Pier)	
9	NB only	SB only		(East & West curb lines) (South side of Pier)	SB only (6" dia.)
10	✓			(East curb line only) (South side of Pier)	
11	✓			(East curb line only) (South side of pier)	
12	✓			(East curb line only) (South side of pier)	
13	✓			(East curb line only) (South side of pier)	
14	✓			(East curb line only) (South side of pier)	

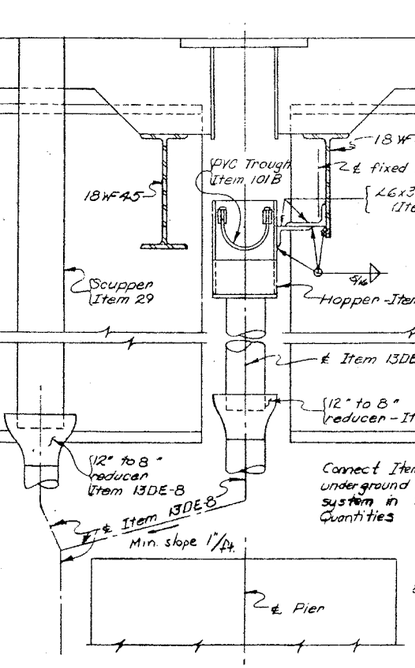

SECTION A-A

Scale: 1" = 1'-0"

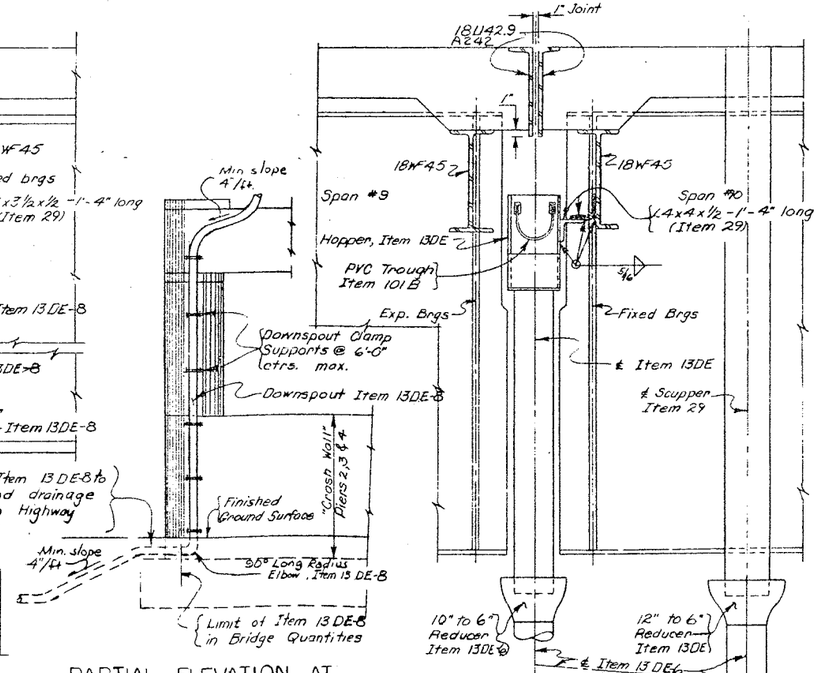

PARTIAL ELEVATION AT PIERS 1,2,3,4,5*,6 & 7 (NB & SB)

Scale: 3/16" = 1'-0"

*No Hopper at Piers #6 & #7 Downspout drains only the scupper.

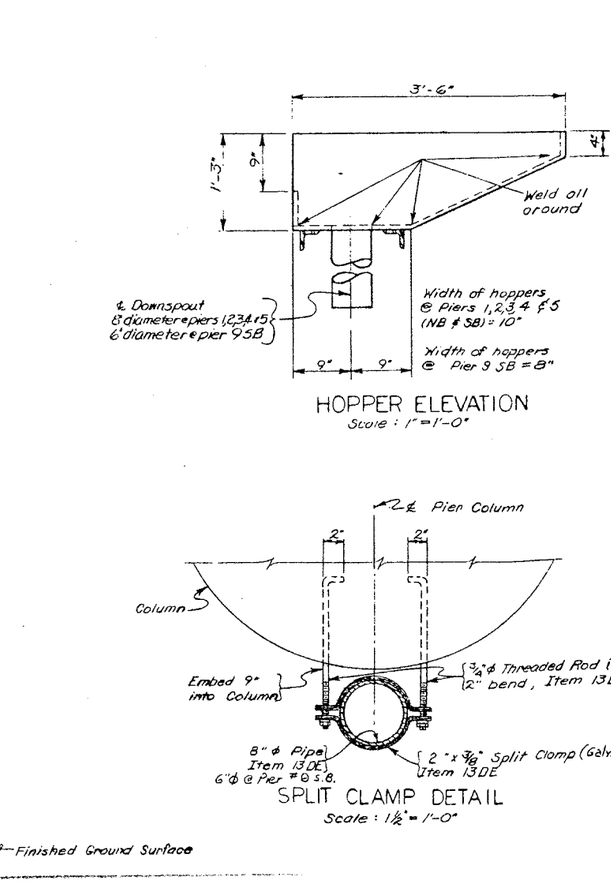

SECTION B-B

Scale: 1" = 1'-0"

HOPPER ELEVATION

Scale: 1" = 1'-0"

SPLIT CLAMP DETAIL

Scale: 1½" = 1'-0"

NOTES:
Six inch diameter downspouts shall be paid for under Item 13DE-6
Eight inch diameter downspouts shall be paid for under Item 13DE-8

PROJECT ENGINEER R. Parker
IN CHARGE OF F.W. Eckel
DESIGNED BY
DESIGN CHECKED BY
DETAILED BY J. Dunnant
DETAIL CHECKED BY F.W. Eckel

BRIDGE NO. 2
INTERSTATE ROUTE 481 OVER DEWITT YARDS

DOWNSPOUT DETAILS

DRAWING NO. 32 OF 50

FED. RD. REG. NO.	STATE	FEDERAL AID PROJECT NO.	SHEET NO.	TOTAL SHEETS
1	NEW YORK	I-080-8(18)	211	309

INTERSTATE ROUTE CONNECTION 690
DEWITT INTERCHANGE (PHASE 2)
ONONDAGA COUNTY

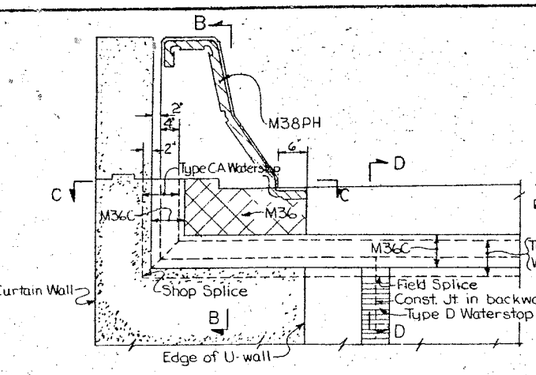

SECTION LOOKING TOWARD SUPERSTRUCTURE AT ABUTMENTS

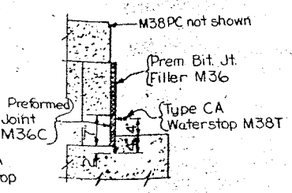

SECTION B-B

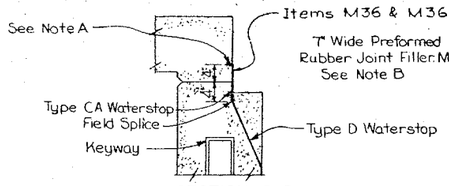

SECTION D-D

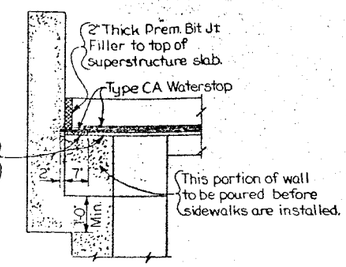

SECTION C-C

INSTALLATION OF WATER STOPS AT ABUTMENTS
Not to Scale

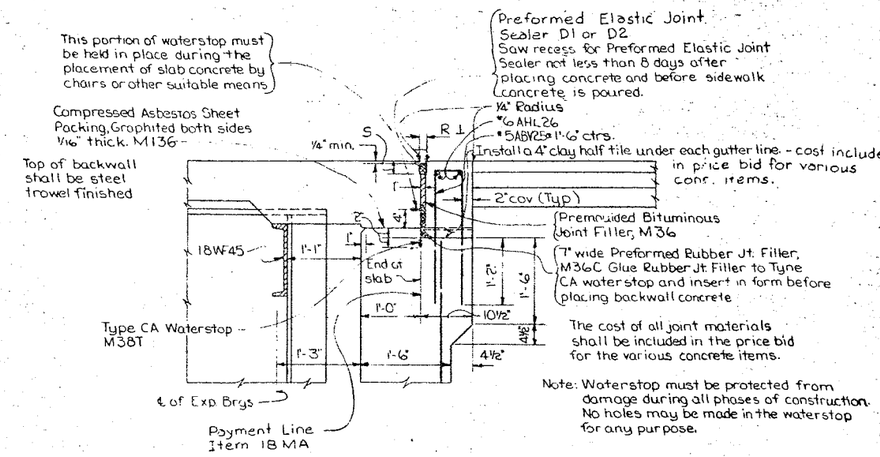

EXPANSION JOINT AT SOUTH ABUTMENT
Not to Scale

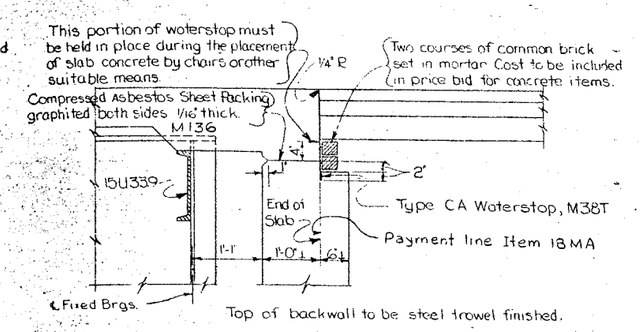

FIXED JOINT AT NORTH ABUTMENT
Not to Scale

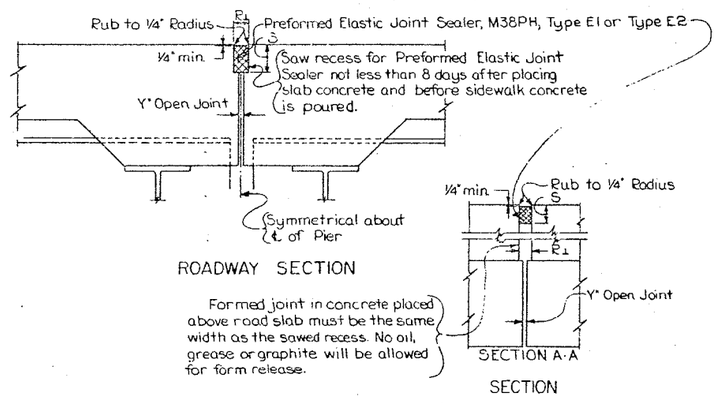

EXPANSION JOINT AT PIERS #6, #7, #8, #10 THRU #14 (NB & SB) & #9 (NB)
Not to Scale

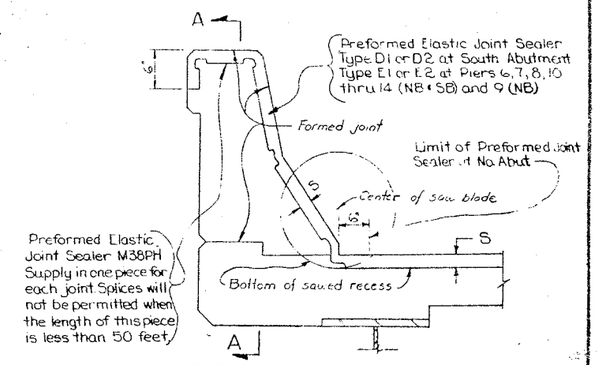

SECTION THRU TRANSVERSE JOINT

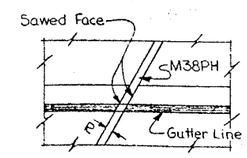

PLAN AT GRANITE CURB

PARAPET DETAILS FOR PREFORMED ELASTIC JOINT SEALER
Not to Scale

JOINT DIMENSIONS				
Preformed Elastic Joint Sealer	R	S	Y	T
Type E1	1 7/8"	4 1/8"	3/4"	3/32"
Type E2	1 7/8"	3 3/4"	3/4"	3/32"
Type D1	1 5/8"	3 3/8"	1"	3/64"
Type D2	1 5/8"	3 3/8"	1"	3/64"

Notes:
'R' dimension is measured at 68° F.
'T' is the amount that 'R' must be decreased for every 10° rise in temperature or increased for every 10° fall in temperature.

Notes. A) This portion of waterstop must be held in place during the placement of slab concrete by chairs or other suitable means.
B) Glue Rubber Joint Filler to Type CA Waterstop with an approved type of commercial cement and insert in form before placing backwall concrete.
Exposed waterstop must be protected from damage by suitable means during all phases of construction. No holes may be made in the waterstop for any purpose.
The cost of all joint materials shall be included in the price bid for the various concrete items.
All splices shall be thermal splices. Method for field splicing waterstops shall be approved by Deputy Chief Engineer, Design.

PROJECT ENGINEER R. L. Parker
IN CHARGE OF J. B. Sherman
DESIGNED BY
DESIGN CHECKED BY
DETAILED BY J. F. Darcy
DETAIL CHECKED BY J. W. Todd

BRIDGE NO. 2
INTERSTATE ROUTE 481 OVER DEWITT YARDS

MISCELLANEOUS DETAILS.

DRAWING NO. 33 OF 50

FED. RD. REG. NO.	STATE	FEDERAL AID PROJECT NO.	SHEET NO.	TOTAL SHEETS
1	NEW YORK	I-690-3(29) I-481-A(118)	212	309

INTERSTATE ROUTE 690 INTERCHANGE 570
BETTERNUT INTERCHANGE (STAGE 2)
ONONDAGA COUNTY

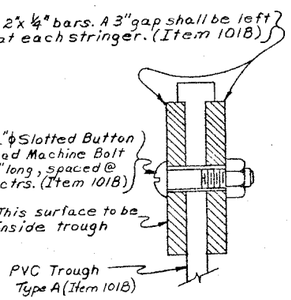

CONNECTION TO TROUGH
Not to Scale

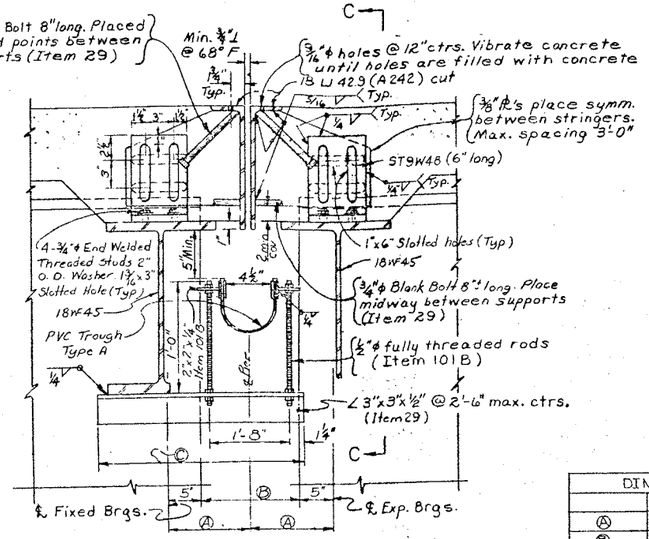

OPEN JOINT AT PIERS #9SB, #1 & #2 NB & SB
Not to Scale

DIMENSION TABLE		
	#1&2 NB·SB	#9SB
Ⓐ	1'-0"	9"
Ⓑ	1'-2"	8"
Ⓒ	2'-0"	1'-9"

Note:
¾"ϕ end welded headed studs, 8" ± long, may be substituted for the ¾"ϕ Blank Bolts.

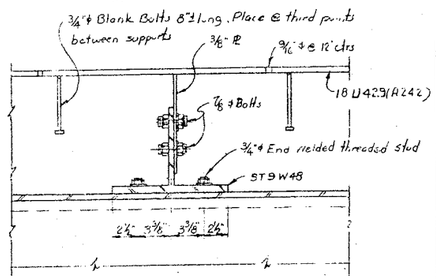

SECTION C-C
No Scale

TABLE OF HAUNCH HEIGHTS (AT ENDS OF GIRDERS)			
GIRDER		Height of Haunch	
		@ ℄ exp. brgs. (South end of Girder)	@ ℄ fix. brgs. (North End of Girder)
Span 1 (SB & NB)	Fascias (G1 & G4)	3 ½"	3½"
	Interiors (G2 & G3)	3 ½"	3½"
Spans 2 (SB & NB)	Fascias (G1 & G4)	3 ½"	3½"
	Interiors (G2 & G3)	3 ½"	3½"
Span 3 (SB & NB)	Fascias (G1 & G4)	3⅜"	3⅜"
	Interiors (G2 & G3)	3½"	3½"
Spans 4, 5 & 6 (SB & NB)	Fascias (G1 & G4)	3¼"	3¼"
	Interiors (G2 & G3)	3¼"	3¼"
Spans 7, 8 & 9 (SB & NB)	Fascias (G1 & G4)	3½"	3½"
	Interiors (G2 & G3)	3½"	3½"
Span 10 (Southbound)	Fascias (G1 & G4)	3¼"	3¼"
	Interiors (G2 & G3)	3⅜"	3⅜"
Span 10 (Northbound)	Fascias (G1 & G4)	3½"	3½"
	Interiors (G2 & G3)	3½"	3½"
Spans 11 to 15 S.B. & N.B.	Fascias (G1 & G4)	3½"	3½"
	Interiors (G2 & G3)	3½"	3½"

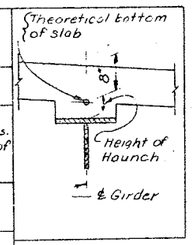

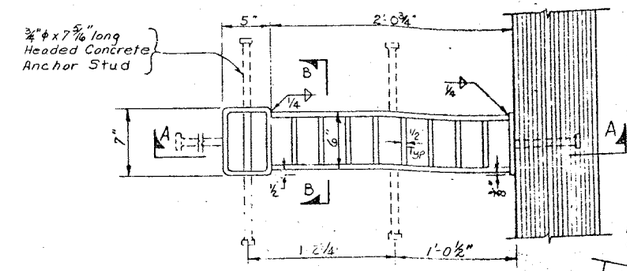

PLAN

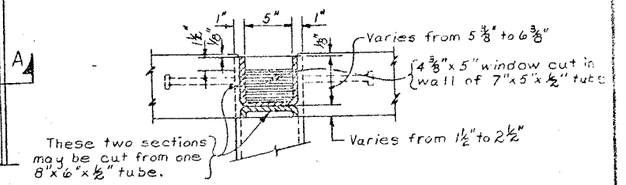

SECTION B-B

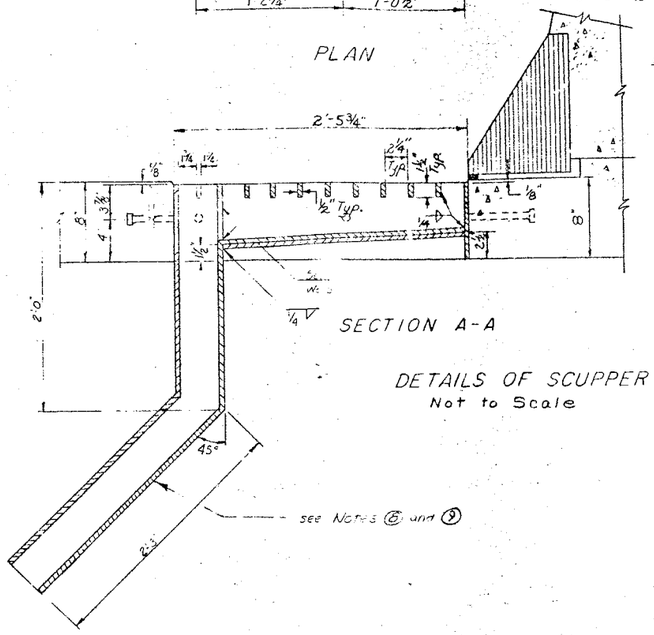

SECTION A-A

DETAILS OF SCUPPER
Not to Scale

Notes:
1. Material in Scupper - ½" thick.
2. Tubes - ASTM designation A500 grade A.
3. Plates or Bars - ASTM designation A36.
4. Anchor Studs - ASTM designation A108, grade designation 1015 or 1020.
5. Scupper shall be galvanized after fabrication is complete in accordance with M19.
6. Place top of Scupper on same slope as top of pavement.
7. Scupper shall be paid for under Item 29.
8. Scupper Outlet Detail shown is for use at scuppers adjacent to Piers #6 (S.B. & N.B.), #9 (N.B.), and #10 thru #14 (S.B. & N.B.).
9. Extend Scupper Outlet Tube vertically downward to Downspout (Item 13DE) at scuppers adjacent to Piers #1, 2, 3, 5, 6, 7 (all S.B. & N.B.) and Pier #9 (S.B.).
10. Adjust exact location of scuppers which drain into downspout system so as to accommodate the location of the downspouts.
11. Adjust exact location of scuppers which drain directly onto the ground so as not to spill on piers or onto steel diaphragms.

PROJECT ENGINEER R. Parker
IN CHARGE OF J.B. Sherman
DESIGNED BY S. Rouse
DESIGN CHECKED BY N.A. Toppes
DETAILED BY J.C. Thompson
DETAIL CHECKED BY J.W. Eal

BRIDGE NO. 2
INTERSTATE ROUTE 481 OVER DEWITT YARDS

MISCELLANEOUS DETAILS

DRAWING NO. 34 OF 57

FED. RD. REG. NO.	STATE	FEDERAL AID PROJECT NO.	SHEET NO.	TOTAL SHEETS
1	NEW YORK	SPO-STATE 1-481-2(116)	213	329

INTERSTATE ROUTE CONNECTION 570
BUFFALO INTERCHANGE (PHASE 2)
ONONDAGA COUNTY

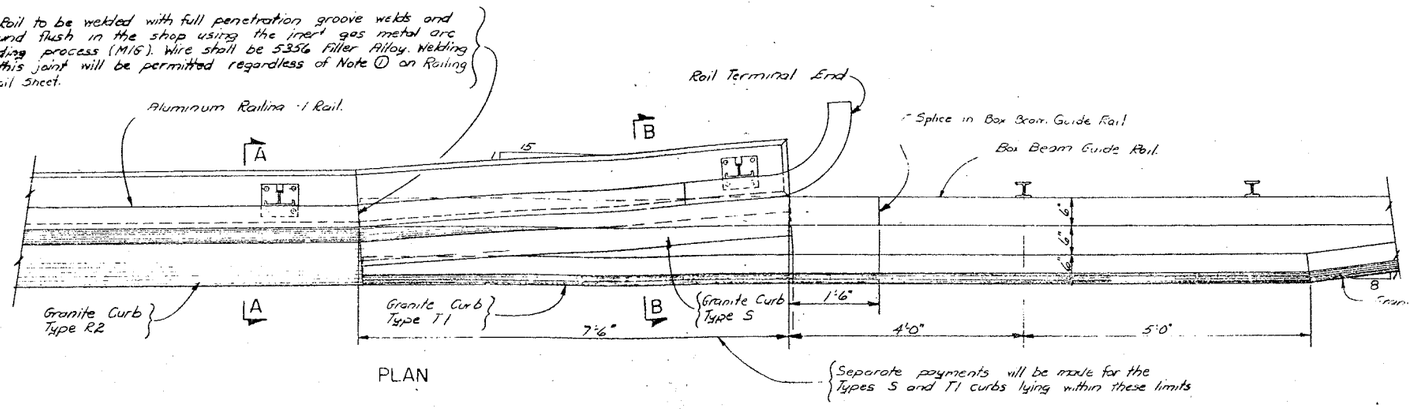

PLAN

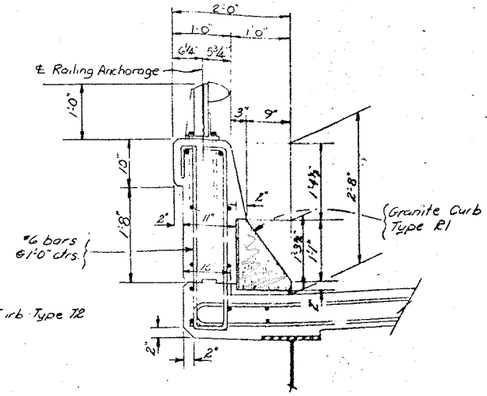

SECTION THRU SUPERSTRUCTURE

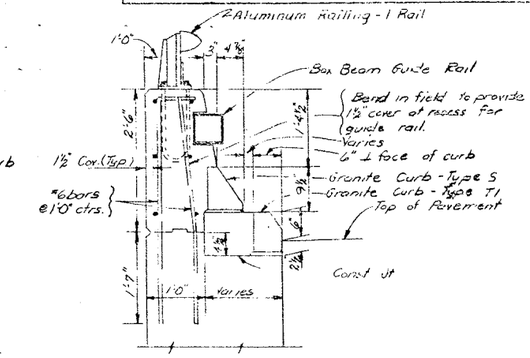

SECTION B-B

All chamfers shown on this sheet are 1" unless otherwise indicated.

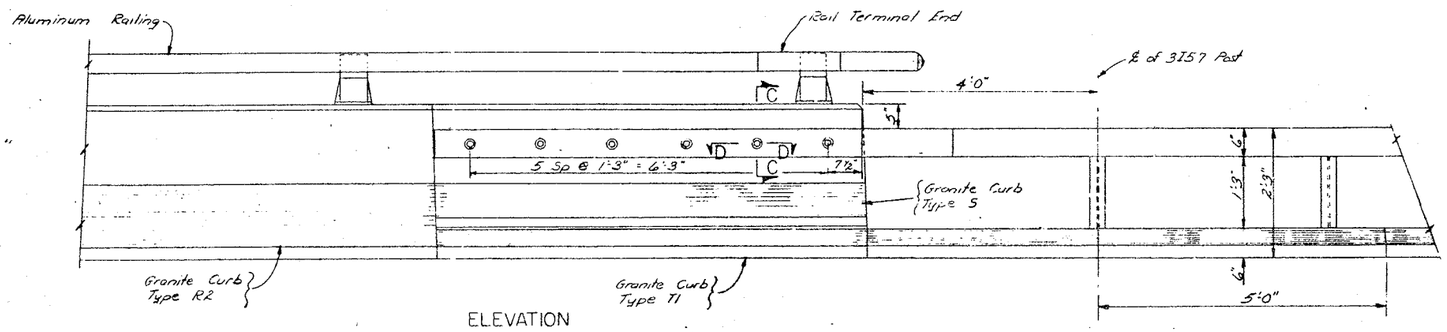

ELEVATION

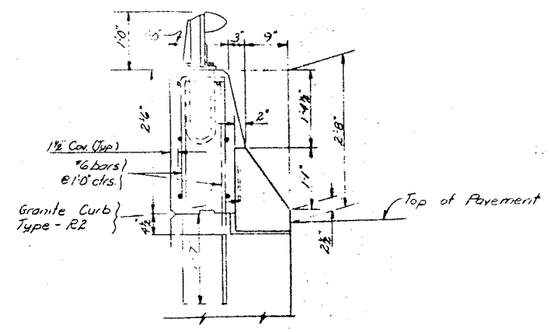

SECTION A-A

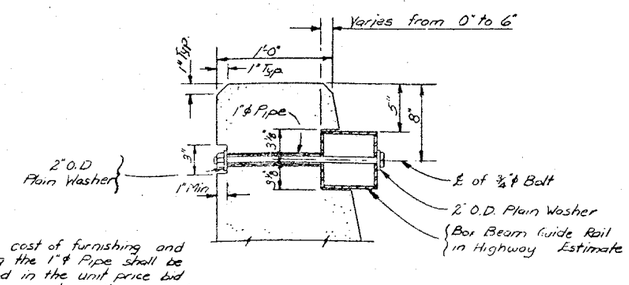

The cost of furnishing and placing the 1" ϕ Pipe shall be included in the unit price bid for the concrete in the parapet.

The cost of furnishing and placing the ¾" ϕ Bolts with their nuts and washers shall be included in the Box Beam Guide Rail Item.

SECTION C-C

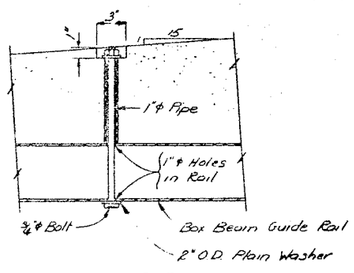

SECTION D-D

Note A:
Rake out joint to a depth of ¾" and tuck point flush with epoxy mortar.

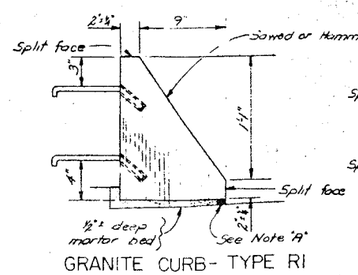

GRANITE CURB - TYPE R1

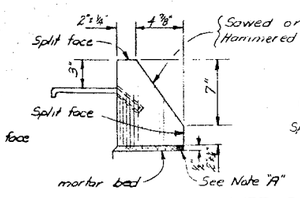

GRANITE CURB-TYPE S

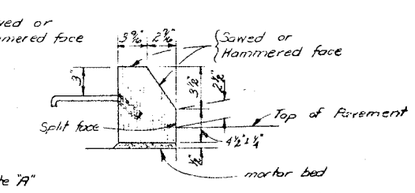

GRANITE CURB-TYPE T1

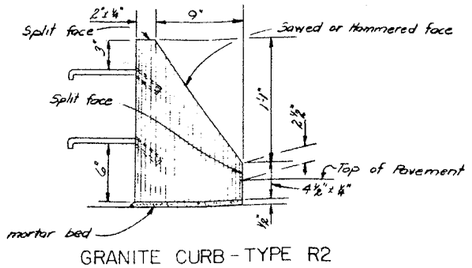

GRANITE CURB - TYPE R2

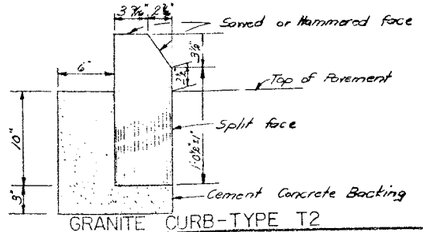

GRANITE CURB-TYPE T2

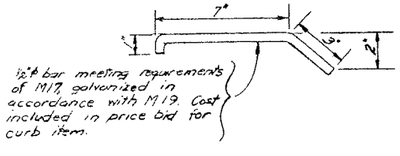

½" ϕ bar meeting requirements of M17, galvanized in accordance with M19. Cost included in price bid for curb item.

ANCHOR BAR

BRIDGE NO. 3
INTERSTATE ROUTE 481 OVER DEWITT YARDS

CONCRETE PARAPET

DRAWING No. 35 OF 50

DETAILED BY Vince Kozakovich
DETAIL CHECKED BY D Granoff 1/1/68
Rev.: D Smith / Jim Ford

FED. RD. REG. NO.	STATE	FEDERAL AID PROJECT NO.	SHEET NO	TOTAL SHEETS
1	NEW YORK	I-690-3(26) I-481-2(116)	214	309

INTERSTATE ROUTE CONNECTION 570
BUTTERNUT INTERCHANGE (PHASE 2)
ONONDAGA COUNTY

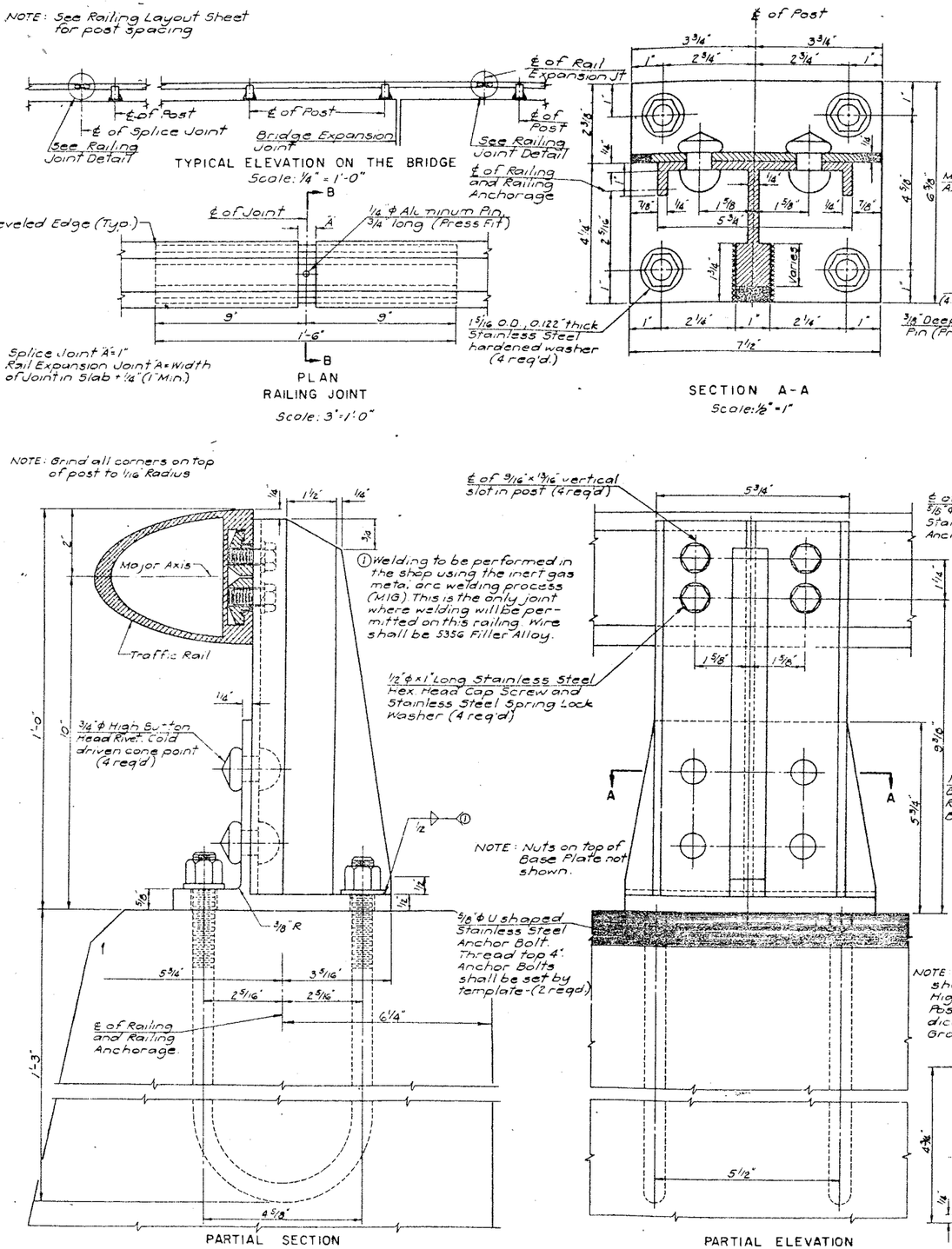

Notes:

All railing is to be fabricated and erected so that the rail is parallel to the parapet.

Since the finished railing must meet all requirements of fit, alignment and grade to the full satisfaction of the Engineer, it is suggested that complete field measurements be made before any shop fabrication is performed.

Aluminum rails, posts, post bases, clamp bars including stainless steel cap screws and lock washers, rail splices, rivets, end caps, pins, rail terminal ends, aluminum caulking compound and any necessary shims and/or pads and steel splice joint assembly between the end of the parapet and the box beam guide railing including tubular rail splice, end splice plate and anchor studs shall be paid for under the railing item.

Anchor bolts, nuts and washers shall be paid for under Item 20

After the anchor bolt nuts have been placed and tightened to the satisfaction of the Engineer, the bolts shall be cut off 1/8 inch above the nut and peened.

Rails shall be continuous over a minimum of three posts. On "U" type wingwalls the rails may be continuous over two posts.

Aluminum rivets shall be cold driven.

Galvanizing shall be done in accordance with Material Specification M19. Bolts to be galvanized shall have a Class 2A thread fit prior to galvanizing.

Materials used in the manufacture of this railing shall conform to the requirements and/or specifications listed below:

Piece	ASTM Designation	Commercial Alloy & Temper
Aluminum Extrusions (Posts, Post bases, rails, rail splices, clamp bars, pins and rail terminal ends)	B221	6061-T6
Aluminum Rivets	B316	6061-T6
Aluminum Plate Shims	B209	1100-0
Aluminum Rail End Caps	B26	43F or 356F
Steel Plate Shims	A36	
Steel Tubular Rail Splices	A500 Grade B or A501	
Steel Splice Plates	A36	
Steel Splice Bolts, Nuts and Washers	A307	
Steel Anchor Studs	A307	
Stainless Steel Anchor Bolts (100,000 psi. Min. Tensile Strength and 80,000 psi. Min. Yield Point)	A193 Grade B8 or A276 Type 304 or A276 Type 430	

Stainless Steel Cap Screws A193 Grade B8
Stainless Steel Spring Lock Washers shall be in accordance with the Military Standard MS35338
Stainless Steel Nuts for Anchor Bolts A 194 Grade 6
Stainless Steel Washers for Anchor Bolts A 167 Type 302 or 304

Design: AASHO Interim Spec-1964

DESIGNED BY R. L. Rathbone	Rev 3	
DETAILED BY C. H. Mahoney	Rev 2	Sn - / V F K - 1/68
DETAIL CHECKED BY Thomas R. Wilson	Rev 1	Changed S.S. Bracket 7/14/66

BRIDGE NO. 2
INTERSTATE ROUTE 481 OVER DEWITT YARDS

ALUMINUM BRIDGE RAILING - I RAIL

F.I.S.H. 70-7

FED. RD. REG. NO.	STATE	FEDERAL AID PROJECT NO.	SHEET NO.	TOTAL SHEETS
1	NEW YORK	I-481-2(11)(2)	215	309

INTERSTATE STATE CONSTRUCTION 570
BUTTERMILK CHANNEL (PHASE 2)
ONONDAGA COUNTY

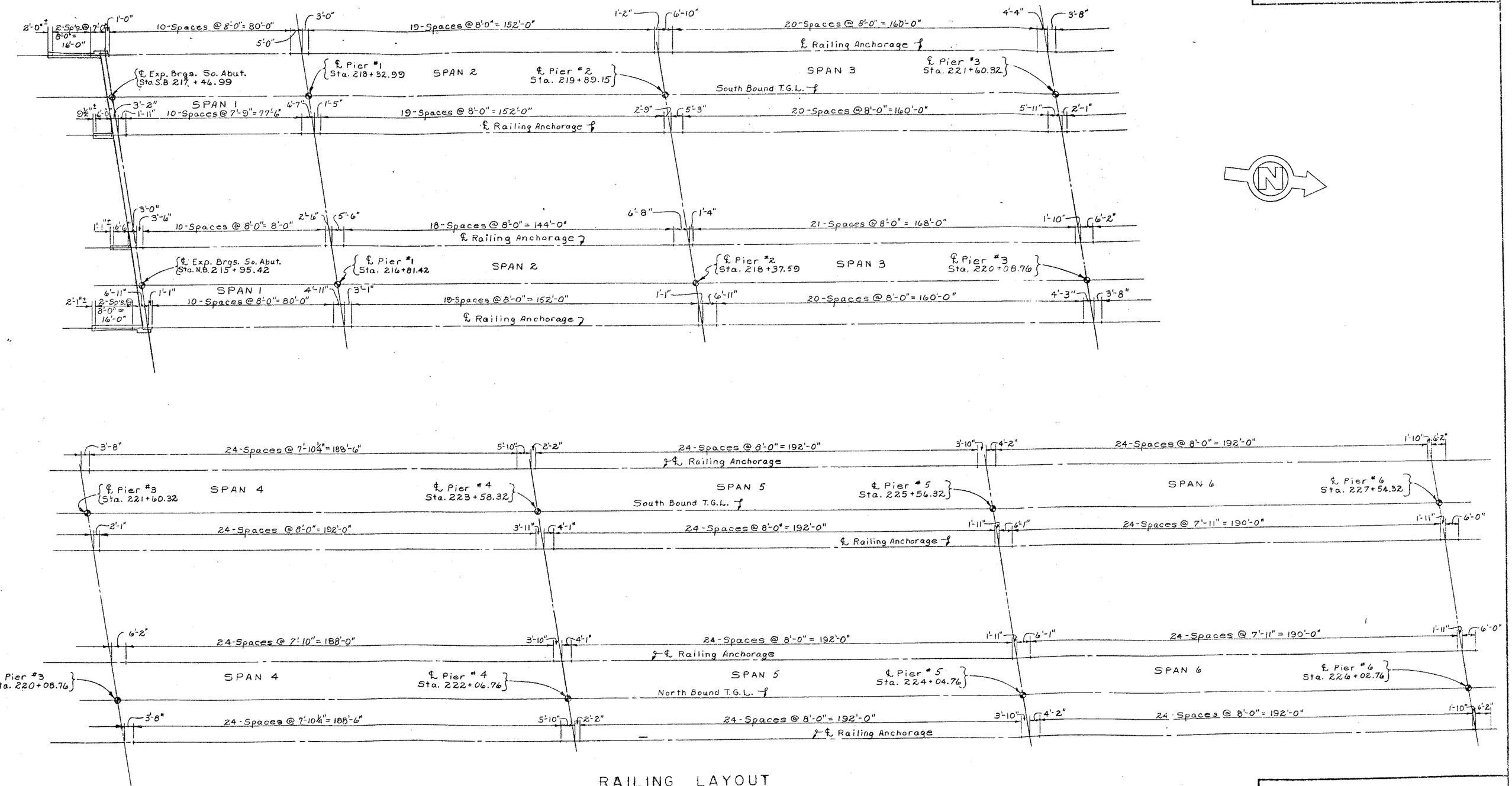

RAILING LAYOUT
Scale: 1" = 20'-0"

PROJECT ENGINEER R. Parker
IN CHARGE OF F. Eckel
DESIGNED BY J. C. Thompson
DESIGN CHECKED BY D. H. Smith
DETAILED BY J. C. Thompson
DETAIL CHECKED BY D.H. Smith

BRIDGE NO. 2
INTERSTATE ROUTE 481 OVER DEWITT YARDS

RAILING LAYOUT

DRAWING NO.

FED. RD. REG. NO.	STATE	FEDERAL AID PROJECT NO.	SHEET NO.	TOTAL SHEETS
1	NEW YORK	I-81-2(23) I-481-2(115)	216	506

INTERSTATE ROUTE CONNECTION 570
BUTTERNUT INTERCHANGE (PHASE 2)
ONONDAGA COUNTY

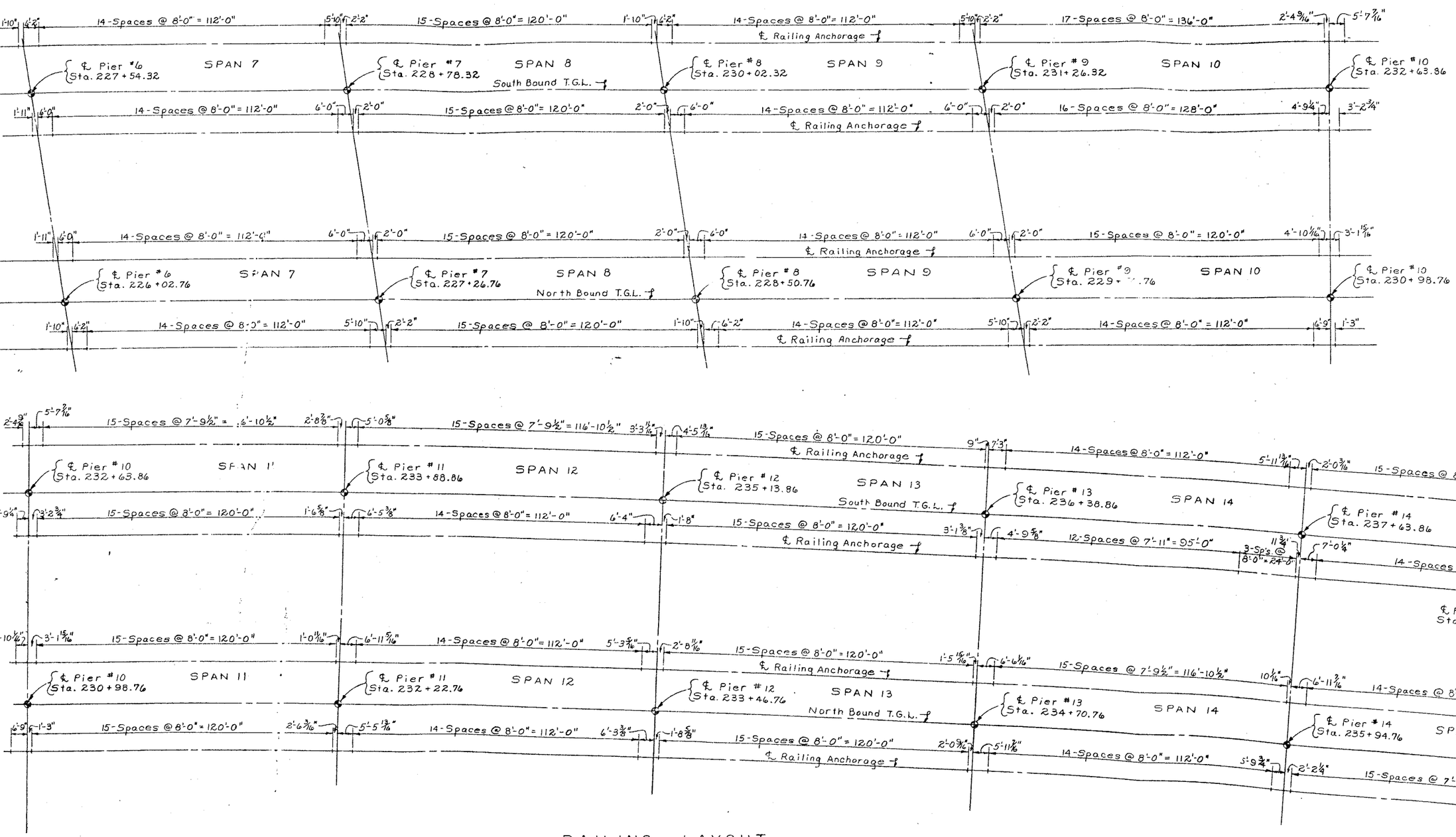

RAILING LAYOUT
Scale: 1" = 20'-0"

PROJECT ENGINEER R. Parker
IN CHARGE OF F. Eckel
DESIGNED BY J.C. Thompson
DESIGN CHECKED BY D.H. Smith
DETAILED BY J.C. Thompson
DETAIL CHECKED BY D.H. Smith

BRIDGE NO. 2
INTERSTATE ROUTE 481 OVER DEWITT YARDS

RAILING LAYOUT

FED. RD. REG. NO.	STATE	FEDERAL AID PROJECT NO.	SHEET NO.	TOTAL SHEETS
1	NEW YORK	I-890-3(25) I-481-2(16)	217	309

INTERSTATE ROUTE CONNECTION 570
BUTTERNUT INTERCHANGE (PHASE 2)
ONONDAGA COUNTY

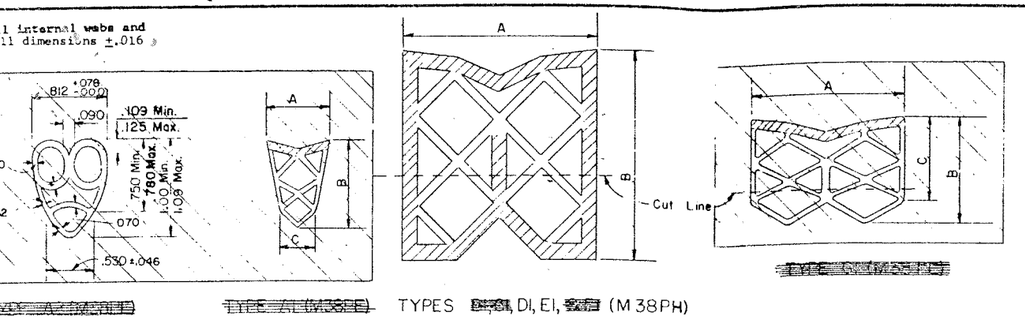

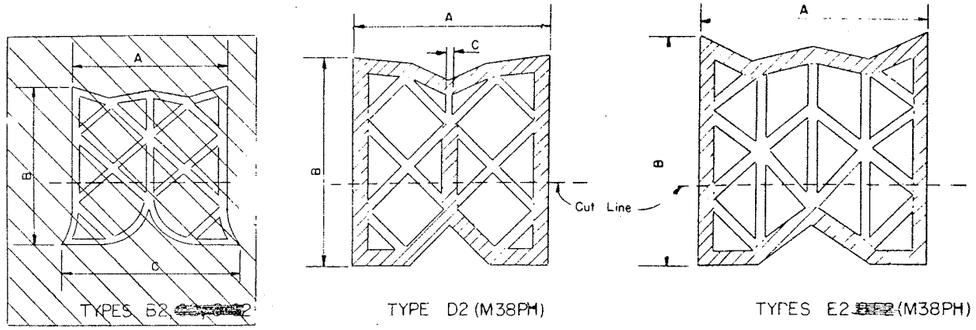

Cross hatched portions of the above details shall be considered as the shell.
Non-cross hatched portions of the above details shall be considered as webs unless a specific dimension is shown.

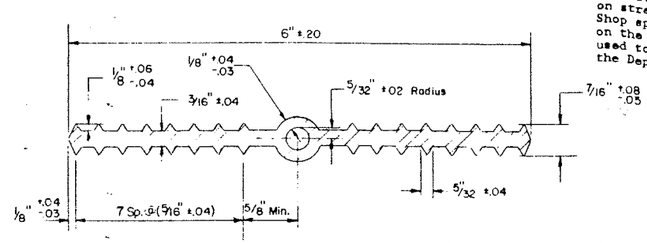

Holes must not be made in waterstop for any purpose.

TYPE A (M38T)

To facilitate shipping and handling of PVC Waterstops, field butt splices will be permitted on straight runs at points approved by the Engineer. Shop splices shall be used at the locations shown on the Contract Plans. The method and equipment used to make the field splice must be approved by the Deputy Chief Engineer (Design).

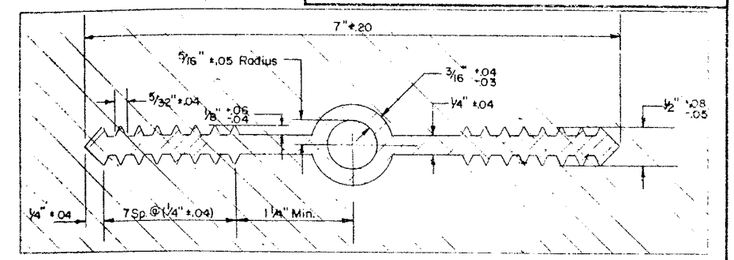

~~Holes must not be made in waterstop for any purpose.~~

~~TYPE B (M38T)~~

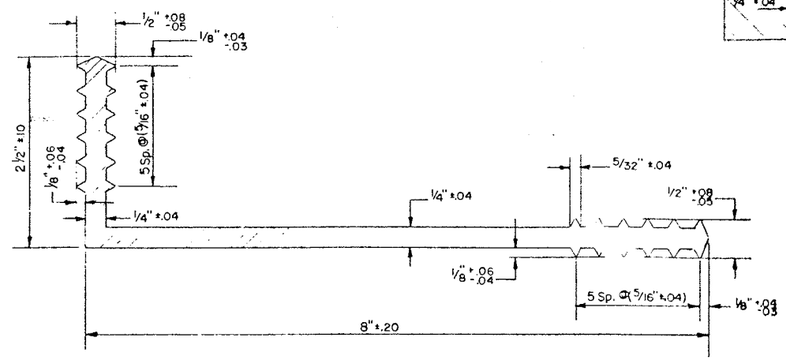

Holes must not be made in waterstop for any purpose.

TYPE CA (M38T)

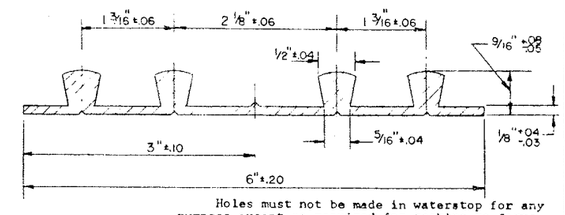

Holes must not be made in waterstop for any purpose except as required for tacking to forms.
Tacking to forms will only be permitted in the area between the outside ribs and the edges of waterstop.
Type D waterstop shall be light gray in color

TYPE D (M38T)

DIMENSIONS FOR PREFORMED ELASTIC JOINT SEALER					
TYPES	A	B	C	THICKNESS	
				SHELL	WEBS
~~A1~~	~~1 3/16" ±.06~~	~~1 1/8" ±.05~~	~~7/16" ±.04~~	~~3/32" ±.02~~	~~3/64" +.02,-.01~~
~~A2~~					
~~B1~~	~~3/4" +.25,-.00~~	~~2" ±.13~~		~~1/8" +.03,-.02~~	~~3/32" +.02,-.03~~
~~B2~~	~~3/4" +.25,-.00~~	~~1 3/4" ±.13~~	~~2" ±.19~~		~~5/64" +.03,-.02~~
~~C1~~	~~2" ±.13~~	~~1 13/16" ±.13~~	~~2 1/4" ±.19~~	~~1/8" +.03,-.02~~	~~3/32" +.03,-.02~~
~~C2~~	~~2" ±.13,-.00~~	~~2" ±.13~~	~~2 1/4" ±.19~~		~~5/32" +.03,-.02~~
D1	2 1/2" +.25,-.00	2 3/4" ±.13		3/16" +.04,-.03	3/32" +.03,-.02
D2	2 1/2" +.25,-.00	2 3/4" ±.13	3/64" +.03,-.02	3/16" +.04,-.03	3/32" +.03,-.02
E1	3" +.25,-.00	3 13/32" ±.19		3/16" +.04,-.03	1/8" +.04,-.03
E2	3" +.25,-.00	3" ±.19		3/16" +.04,-.03	1/8" +.04,-.03
~~F1~~	~~4" +.31,-.00~~	~~4 25/32" ±.25~~		~~1/8" +.04,-.03~~	~~3/16" +.04,-.03~~
~~F2~~	~~4" +.31,-.00~~	~~4" ±.25~~		~~3/16" +.04,-.03~~	~~1/8" +.04,-.03~~
~~G1~~	~~1 5/8" ±.13,-.00~~	~~1 3/8" ±.06~~	~~1 1/16" ±.06~~	~~7/32" ±.02~~	~~5/64" ±.02~~
~~G2~~	~~1 5/8" ±.13,-.00~~	~~1 1/8" ±.13~~	~~1 3/8" ±.13~~		~~5/64" ±.02~~

Any changes in the shape or dimensions of preformed elastic joint sealer must be approved by the Deputy Chief Engineer, (Design). The minimum thickness of any web shall not be less than as specified. The average thickness of all webs shall be within the tolerances specified.

Joints which are to be sealed with preformed elastic joint sealers shall be sealed before the structure is opened to traffic, including construction traffic, and before discontinuing operation when work is suspended during the Winter. The joints shall be thoroughly cleaned, using whatever equipment or method is necessary and when they are free of foreign material, M38PH Sealer shall be installed by suitable hand or machine tools and thoroughly secured in place with the lubricant which shall cover both sides of the sealer over the full area in contact with the sides of the joint. The sealer shall be installed in a compressed condition at the depth shown on the contract plans.

The sealer shall be supplied in one piece for the full width of each joint. Splices will not be permitted when the length of this piece is less than 50 feet. ~~For lengths of 50 to 100 feet, one splice will be permitted. The lengths in excess of 100 feet thereafter may be placed at approximately 70 foot intervals.~~

~~Crossings with a longitudinal expansion joint, the transverse sealers shall be placed in one piece for the full length of the sealer but be joined in one piece between the transverse sealers. Joints between the transverse and longitudinal sealers shall be sealed with lubricant.~~

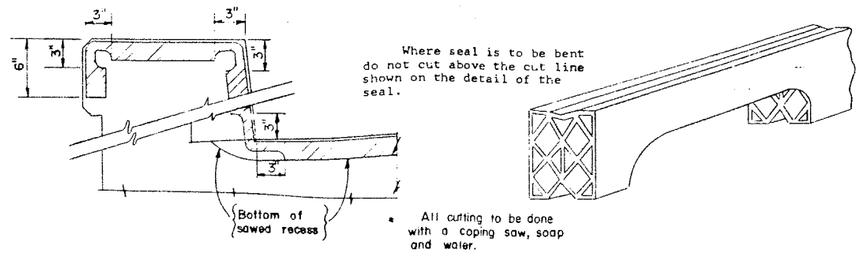

DETAIL FOR CUTTING AND BENDING SEAL (M38PH)

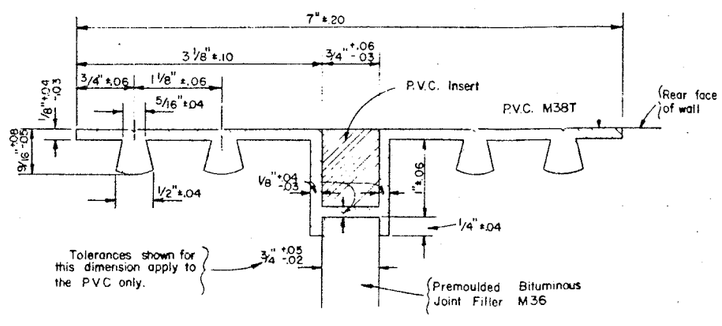

TYPE E

PVC Insert:
Closed cell polyvinyl chloride (SP) Grade VE-45W as per ASTM D1667. Color shall be light gray.
Density shall be a min. of 3 lbs. and a max. of 5 lbs. per cubic foot.
Material shall be sampled as and at the same time as the M3CT. The sides of the PVC Insert shall be bonded to the waterstop at the factory.

Holes must not be made in waterstop for any purpose except as required for tacking to forms.
Tacking to forms will only be permitted in the area between the outside ribs and the edges of waterstop.
Type E waterstop shall be light gray in color.

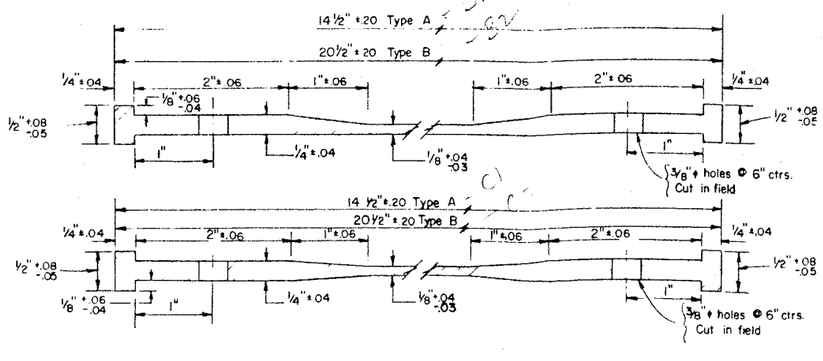

One longitudinal shop splice will be permitted in the fabrication of the Type B Trough.
PVC trough to be paid for under Item 101B.

TYPES A & B PVC TROUGHS (M38T)
EITHER SHAPE MAY BE USED

PROJECT ENGINEER
CHARGE OF
DESIGNED BY
DESIGN CHECKED BY
DETAILED BY Vincent Kozakevich
DETAIL CHECKED BY D. Granoff 7/11/67

Revised: 10/67

BRIDGE NO. 2
INTERSTATE ROUTE 481 OVER DEWITT YARDS

PREFORMED ELASTIC JOINT SEALER
PVC WATERSTOPS AND PVC TROUGHS

DRAWING NO. [illegible] OF 50

FED. RD. REG. NO.	STATE	FEDERAL AID PROJECT NO.	SHEET NO.	TOTAL SHEETS
1	NEW YORK	I-500-3(26) I-81-2(16)	218	309

INTERSTATE ROUTE CONNECTION 570
BUTTERNUT PARKWAY (PHASE 2)
ONONDAGA COUNTY

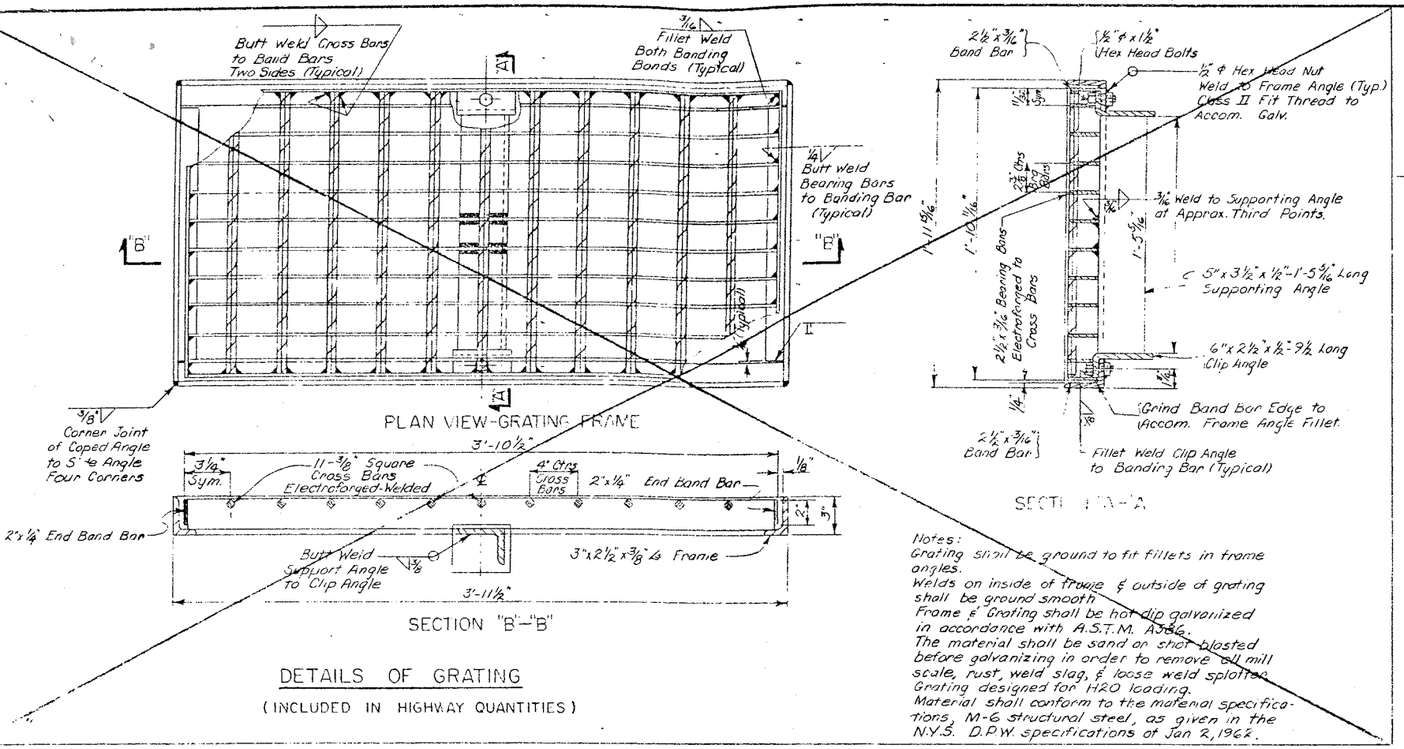

Notes:
Grating shall be ground to fit fillets in frame angles.
Welds on inside of frame & outside of grating shall be ground smooth.
Frame & Grating shall be hot dip galvanized in accordance with A.S.T.M. A386.
The material shall be sand or shot blasted before galvanizing in order to remove all mill scale, rust, weld slag, & loose weld spatter.
Grating designed for H20 loading.
Material shall conform to the material specifications, M-6 structural steel, as given in the N.Y.S. D.P.W. specifications of Jan 2, 1962.

DETAILS OF GRATING
(INCLUDED IN HIGHWAY QUANTITIES)

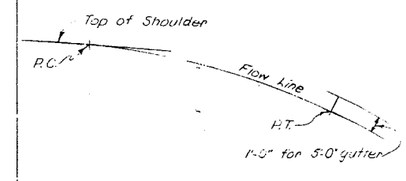

FLOW LINE PROFILE

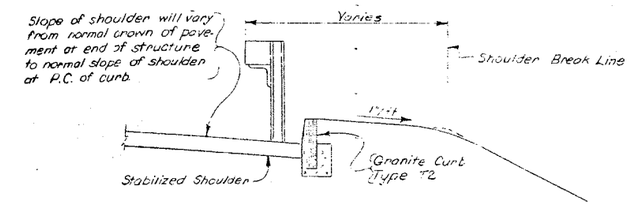

SECTION A-A
Not to Scale

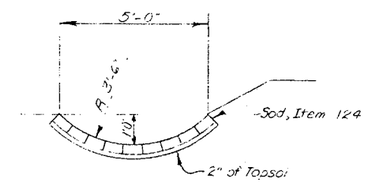

SECTION "HPU GUTTER
Scale: 3/8" = 1'-0"

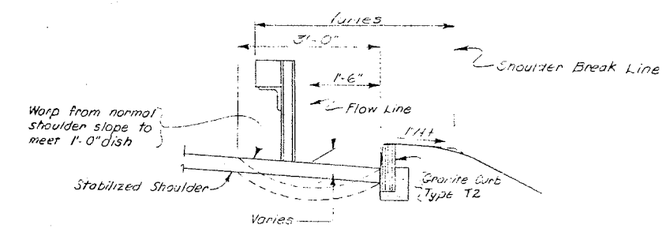

SECTION B-B
Not to Scale

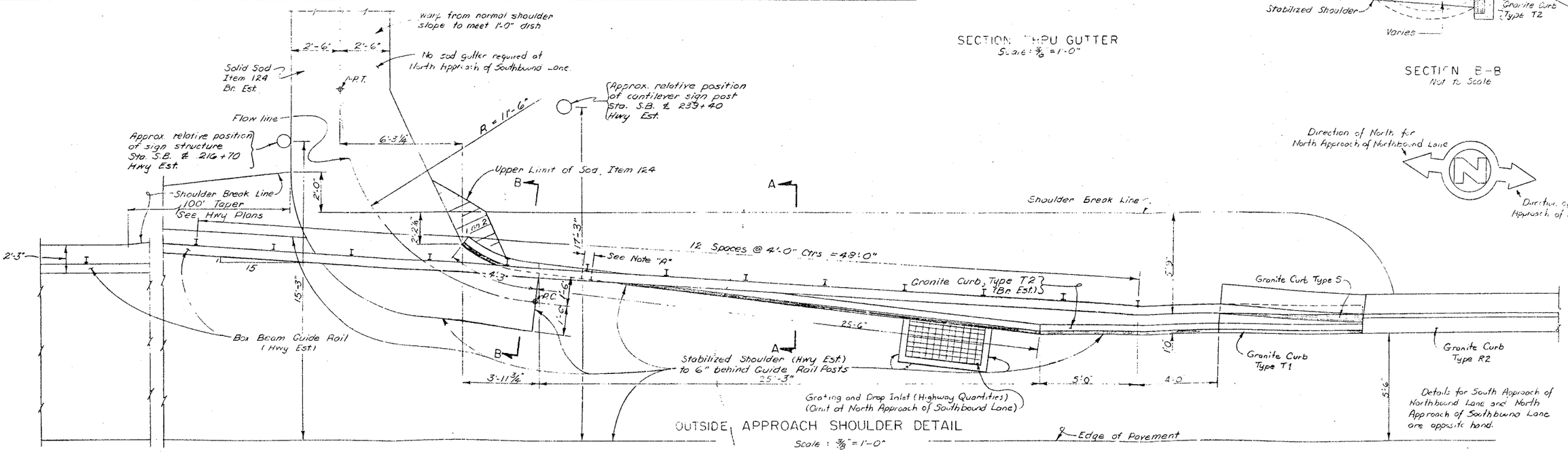

OUTSIDE APPROACH SHOULDER DETAIL
Scale: 3/8" = 1'-0"

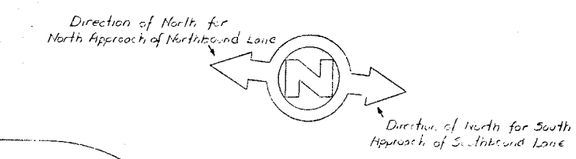

Details for South Approach of Northbound Lane and North Approach of Southbound Lane are opposite hand.

Note "A" - 6" min. gap in granite curb to be filled with mortar after guide rail post has been set. This filled in portion shall be paid for at the unit price bid for the adjacent granite curb.

Grating and Drop Inlet to be included in the Hwy Est.

All sod to be included in the Bridge Estimate.

PROJECT ENGINEER E. PAGLIA
IN CHARGE OF L. E. SHERMAN
DESIGNED BY
DESIGN CHECKED BY
DETAILED BY
DETAIL CHECKED BY

BRIDGE NO. 2
INTERSTATE ROUTE 481 OVER DEWITT YARDS

DRAINAGE DETAILS
DRAWING NO. 40 OF 50

FED. RD. REG. NO.	STATE	FEDERAL AID PROJECT NO.	SHEET NO.	TOTAL SHEETS
1	NEW YORK	I-690-3 (26) I-481-2(116)	219	309

INTERSTATE ROUTE CONNECTION 570
BUTTERNUT INTERCHANGE (PHASE 2)
ONONDAGA COUNTY

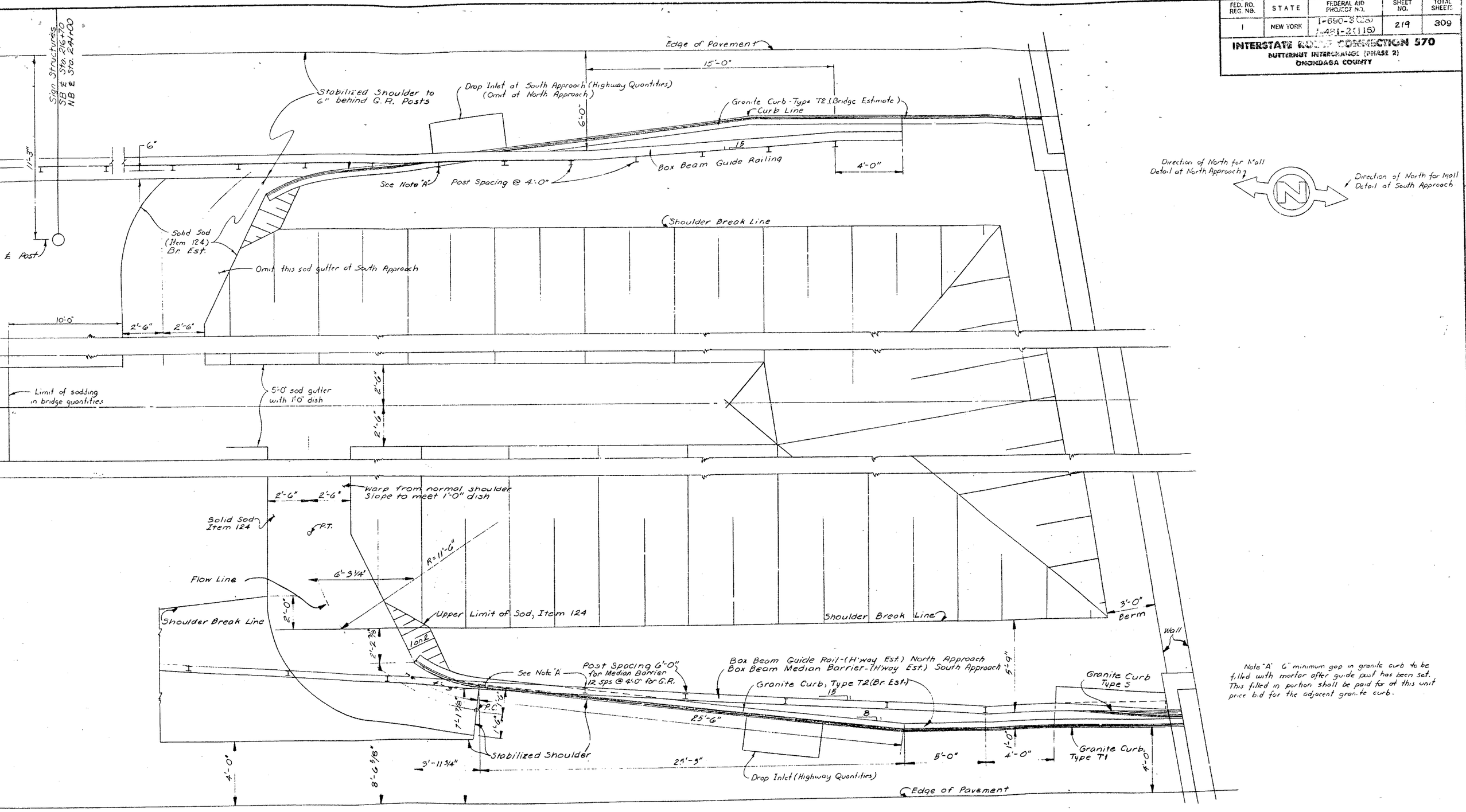

Note "A" 6" minimum gap in granite curb to be filled with mortar after guide post has been set. This filled in portion shall be paid for at this unit price bid for the adjacent granite curb.

MALL APPROACH SHOULDER DETAILS

SCALE: 3/8"=1'-0"

PROJECT ENGINEER	R. Parker
IN CHARGE OF	F.W. Eckel
DESIGNED BY	
DESIGN CHECKED BY	
DETAILED BY	N.T. Colbert
DETAIL CHECKED BY	F.W. Eckel

BRIDGE NO. 2
INTERSTATE ROUTE 481 OVER DEWITT YARDS

MALL APPROACH SHOULDER DETAILS

DRAWING NO. 41 OF 50

FED. RD. REG. NO.	STATE	FEDERAL AID PROJECT NO.	SHEET NO.	TOTAL SHEETS
1	NEW YORK	~~I-599-2(123)~~ I-481-2(116)	220	806

INTERSTATE ROUTE CONNECTION 570
BUTTERNUT INTERCHANGE (PHASE 2)
ONONDAGA COUNTY

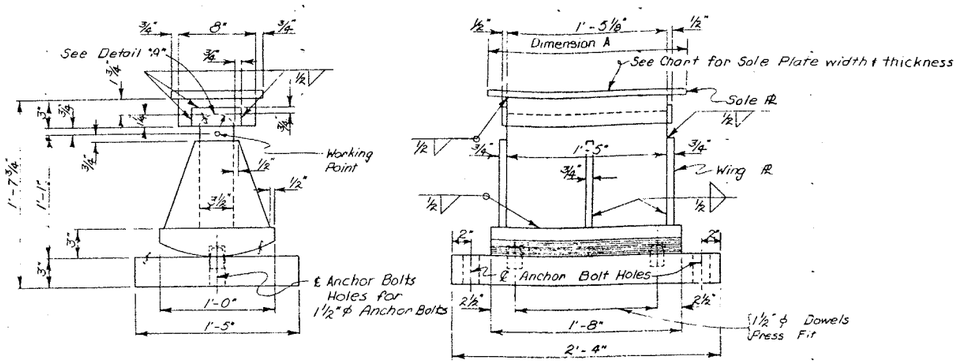

EXPANSION BEARING - TYPE II
Scale: 1½"=1'-0"

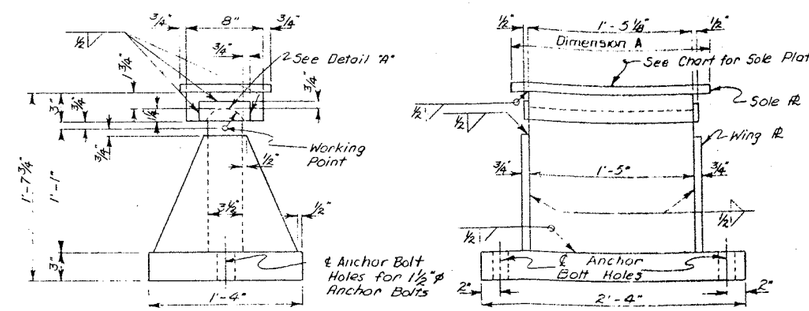

FIXED BEARING - TYPE II
Scale: 1½"=1'-0"

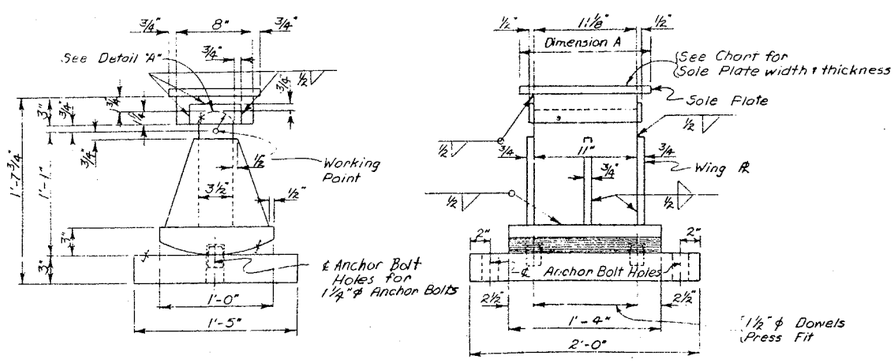

EXPANSION BEARING - TYPE I
Scale: 1½"=1'-0"

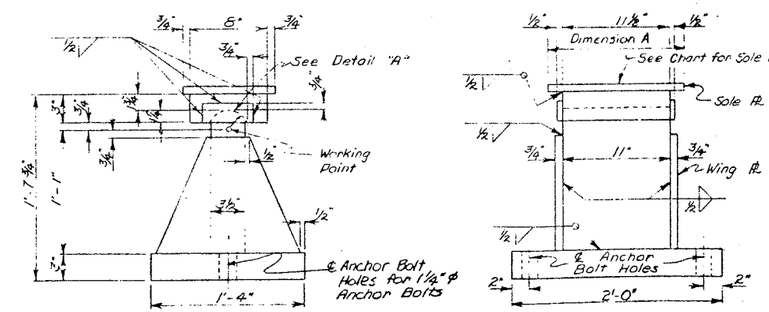

FIXED BEARING - TYPE I
Scale: 1½"=1'-0"

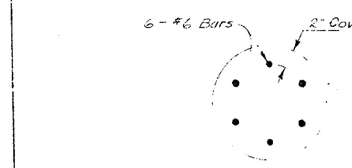

SECTION D-D
Scale: 1½"=1'-0"

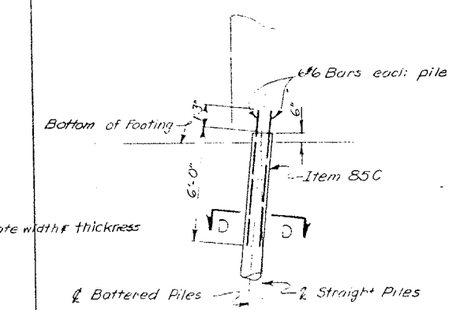

PILE ELEVATION
Scale: ¼"=1'-0"

CAST-IN-PLACE CONCRETE PILES ITEM 85C

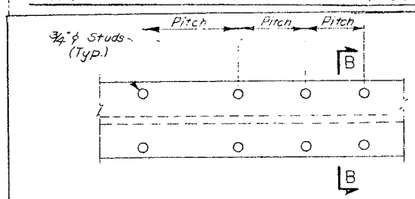

PARTIAL PLAN OF STUDS
Scale: None

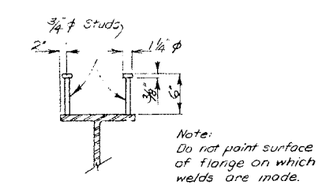

SECTION B-B
Scale: None

STUD SHEAR CONNECTORS ITEM 28B

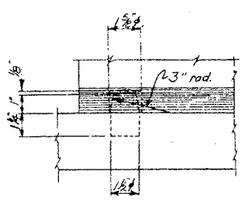

DETAIL OF DOWEL
Scale: 3" = 1'-0"

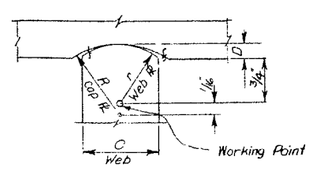

Bearing Type	R	r	C	D
Type I	2 1/16"	2"	3½"	1¼"
Type II	2 1/16"	2"	3½"	1¼"
Type III	2 1/16"	2"	3 1/2"	1⅛"

DETAIL A
No Scale

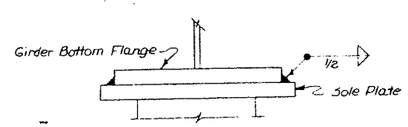

TYPICAL SOLE PLATE TO GIRDER CONNECTION DETAIL
No Scale

PROJECT ENGINEER R. Parker
IN CHARGE OF F. Eckel
DESIGNED BY
DESIGN CHECKED BY
DETAILED BY J. Dussault
DETAIL CHECKED BY H.G. Tepper

BRIDGE NO. 2
INTERSTATE ROUTE 481 OVER DEWITT YARDS

BEARINGS

DRAWING NO. 42 OF 50

FED. RD. REG. NO.	STATE	FEDERAL AID PROJECT NO	SHEET NO.	TOTAL SHEETS
1	NEW YORK	I-481-2(13) 1-481-2(16)	221	309

INTERSTATE ROUTE CONNECTION 570
BUTTERNUT INTERCHANGE (PHASE 2)
ONONDAGA COUNTY

Note: See Miscellaneous Drawing #42 for Detail "A" & for Detail of Dowels.

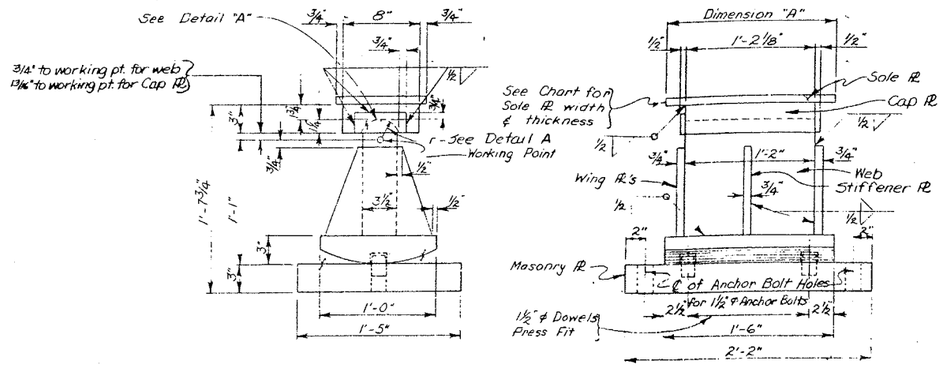

EXPANSION BEARING – TYPE III
Scale: 1½" = 1'-0"

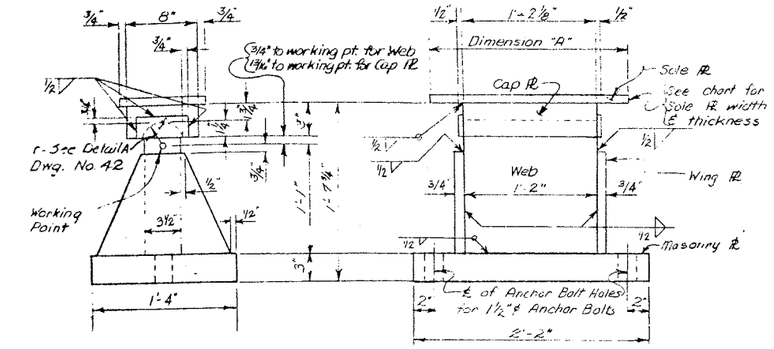

FIXED BEARING – TYPE III
Scale: 1½" = 1'-0"

BEARING SCHEDULE
SOUTHBOUND LANE

SPAN	GIRDER	BEARING TYPE EXP	BEARING TYPE FIXED	SOLE PL DIM "A"	SOLE PL THICKNESS EXP	SOLE PL THICKNESS FIXED
1	1	I	I	1'-2"	3/4	3/4
	2	I	I	1'-7"	3/4	3/4
	3	I	I	1'-7"	3/4	3/4
	4	I	I	1'-2"	3/4	3/4
2	1	III	III	1'-11"	7/8	3/4
	2	III	III	1'-11"	7/8	3/4
	3	III	III	1'-11"	7/8	3/4
	4	III	III	1'-11"	7/8	3/4
3	1	III	III	2'-6"	3/4	3/4
	2	III	III	2'-4"	3/4	3/4
	3	III	III	2'-4"	3/4	3/4
	4	III	III	2'-6"	3/4	3/4
4	1	II	II	2'-8"	3/4	3/4
	2	II	II	2'-2"	1	3/4
	3	II	II	2'-2"	1	3/4
	4	II	II	2'-8"	1	3/4
5	1	II	II	2'-8"	3/4	7/8
	2	II	II	2'-2"	3/4	7/8
	3	II	II	2'-2"	3/4	7/8
	4	II	II	2'-8"	3/4	7/8
6	1	II	II	2'-8"	3/4	3/4
	2	II	II	2'-2"	3/4	1
	3	II	II	2'-2"	3/4	1
	4	II	II	2'-8"	3/4	3/4
7	1	II	I	1'-8"	3/4	1
	2	I	I	2'-0"	3/4	1
	3	I	I	2'-0"	3/4	1
	4	II	I	1'-8"	3/4	1
8	1	I	I	2'-1"	3/4	1
	2	I	I	2'-0"	3/4	1
	3	I	I	2'-0"	3/4	1
	4	I	I	2'-1"	3/4	1
9	1	I	I	2'-1"	3/4	1
	2	I	I	2'-0"	3/4	1
	3	I	I	2'-0"	3/4	1 1/8
	4	I	I	2'-1"	3/4	1 1/8
10	1	I	I	2'-2"	3/4	1 1/8
	2	I	I	2'-2"	3/4	1 1/8
	3	I	I	2'-2"	3/4	1 1/8
	4	I	I	2'-2"	3/4	1 1/8
11	1	I	I	2'-1"	3/4	1 1/4
	2	I	I	2'-0"	3/4	1 1/4
	3	I	I	2'-0"	3/4	1 1/4
	4	I	I	2'-1"	3/4	1 1/4
12	1	I	I	2'-1"	3/4	1 1/4
	2	I	I	2'-0"	3/4	1 1/4
	3	I	I	2'-0"	3/4	1 1/4
	4	I	I	2'-1"	3/4	1 1/4
13	1	I	I	2'-1"	3/4	1 1/4
	2	I	I	2'-0"	3/4	1 1/4
	3	I	I	2'-0"	3/4	1 1/4
	4	I	I	2'-1"	3/4	1 1/4
14	1	I	I	2'-1"	3/4	1 1/4
	2	I	I	2'-0"	3/4	1 1/4
	3	I	I	2'-0"	3/4	1 1/4
	4	I	I	2'-1"	3/4	1 1/4
15	1	I	I	2'-1"	3/4	3/4
	2	I	I	2'-0"	3/4	3/4
	3	I	I	2'-0"	3/4	3/4
	4	I	I	2'-1"	3/4	3/4

BEARING SCHEDULE
NORTHBOUND LANE

SPAN	GIRDER	BEARING TYPE EXP	BEARING TYPE FIXED	SOLE PL DIM "A"	SOLE PL THICKNESS EXP	SOLE PL THICKNESS FIXED
1	1	I	I	1'-2"	3/4	3/4
	2	I	I	1'-7"	3/4	3/4
	3	I	I	1'-7"	3/4	3/4
	4	I	I	1'-2"	3/4	3/4
2	1	III	III	1'-11"	7/8	3/4
	2	III	III	1'-11"	7/8	3/4
	3	III	III	1'-11"	7/8	3/4
	4	III	III	1'-11"	7/8	3/4
3	1	III	III	2'-6"	3/4	3/4
	2	III	III	2'-4"	3/4	3/4
	3	III	III	2'-4"	3/4	3/4
	4	III	III	2'-6"	3/4	3/4
4	1	II	II	2'-8"	3/4	3/4
	2	II	II	2'-2"	1	3/4
	3	II	II	2'-2"	1	3/4
	4	II	II	2'-8"	3/4	3/4
5	1	II	II	2'-8"	3/4	7/8
	2	II	II	2'-2"	3/4	7/8
	3	II	II	2'-2"	3/4	7/8
	4	II	II	2'-8"	3/4	7/8
6	1	II	II	2'-8"	3/4	3/4
	2	II	II	2'-2"	3/4	1
	3	II	II	2'-2"	3/4	1
	4	II	II	2'-8"	3/4	3/4
7	1	II	I	1'-8"	3/4	1
	2	I	I	2'-0"	3/4	1
	3	I	I	2'-0"	3/4	1
	4	II	I	1'-8"	3/4	1
8	1	I	I	2'-1"	3/4	1
	2	I	I	2'-0"	3/4	1
	3	I	I	2'-0"	3/4	1
	4	I	I	2'-1"	3/4	1
9	1	I	I	2'-1"	3/4	1
	2	I	I	2'-0"	3/4	1 1/8
	3	I	I	2'-0"	3/4	1 1/8
	4	I	I	2'-1"	3/4	1 1/8
10	1	I	I	2'-1"	3/4	1 1/8
	2	I	I	2'-0"	3/4	1 1/8
	3	I	I	2'-0"	3/4	1 1/8
	4	I	I	2'-1"	3/4	1 1/8
11	1	I	I	2'-1"	3/4	1 1/4
	2	I	I	2'-0"	3/4	1 1/8
	3	I	I	2'-0"	3/4	1 1/4
	4	I	I	2'-1"	3/4	1 1/4
12	1	I	I	2'-1"	3/4	1 1/4
	2	I	I	2'-0"	3/4	1 1/4
	3	I	I	2'-0"	3/4	1 1/4
	4	I	I	2'-1"	3/4	1 1/4
13	1	I	I	2'-1"	3/4	1 1/4
	2	I	I	2'-0"	3/4	1 1/4
	3	I	I	2'-0"	3/4	1 1/4
	4	I	I	2'-1"	3/4	1 1/4
14	1	I	I	2'-1"	3/4	1 1/4
	2	I	I	2'-0"	3/4	1 1/4
	3	I	I	2'-0"	3/4	1 1/4
	4	I	I	2'-1"	3/4	1 1/4
15	1	I	I	2'-1"	3/4	3/4
	2	I	I	2'-0"	3/4	3/4
	3	I	I	2'-0"	3/4	3/4
	4	I	I	2'-1"	3/4	3/4

PROJECT ENGINEER R. PARKER
IN CHARGE OF J. B. SHERMAN
DESIGNED BY
DESIGN CHECKED BY
DETAILED BY J. DURRANT
DETAIL CHECKED BY M. G. Koppocw

BRIDGE NO. 2
INTERSTATE ROUTE 481 OVER DEWITT YARDS

BEARINGS

DRAWING NO. 43 OF 50

F.I.S.H. 70-7

FED. RD. REG. NO.	STATE	FEDERAL AID PROJECT NO.	SHEET NO.	TOTAL SHEETS
1	N.Y.	I-090-3(28) I-481-2(116)	222	309

INTERSTATE ROUTE CONNECTION 570
BUTTERNUT INTERCHANGE (PHASE 2)
ONONDAGA COUNTY

Note: For Pier No1 see Sheet No.47

PIER 2 NORTHBOUND

MARK	SIZE	NO.	LENGTH	TYPE	A	B	C	D	E	F	G	LOCATION
	5	19	42'-6"	Str.								Longitudinal top & bottom footing.
	5	29	11'-6"	Str.								Transverse top footing.
	7	80	11'-6"	Str.								Transverse bottom footing.
	8	90	4'-6"	Str.								Vertical footings to plinth.
	5	72	2'-10"	Str.								Vertical footings to plinth.
	8	90	25'-3"	Str.								Vertical plinth to cap beam.
	5	72	10'-0"	Str.								Vertical plinth.
	5	20	35'-0"	Str.								Longitudinal in plinth.
	4	36	12'-1"	V	11'-6⅜"	3'-8"	4½"					Hoops in columns.
	11	7	9'-2"	Str.								Longitudinal top of beam.
	11	2	41'-6"	XI	30'-9"	1'-8"	3'-8¾"	2'-5"				Longitudinal top of beam.
	11	2	45'-6"	XI	34'-9"	1'-8"	3'-8¾"	2'-5"				Longitudinal top of beam.
	4	4	9'-2"	Str.								Longitudinal top of beam.
	11	8	8'-1"	Str.								Longitudinal bottom of beam.
	11	2	36'-1"	Str.								Longitudinal bottom of beam.
	11	2	39'-9"	Str.								Longitudinal bottom of beam.
	5	42	3'-8"	III	3'-1"	7"	5"	5"				Vertical dowel beam to pedestal.
	6	6	16'-4"	IX	4'-2"	3'-8"	6¾"	6½"				Hoops in pedestals (interior).
	6	6	17'-6"	VI	3'-8"	5'-9"	1'-10"	3'-8"	6¾"	6½"		Hoops in pedestals (exterior)
	5	8	36'-1"	Str.								Longitudinal in sides of beam.
	5	84	16'-3"	IX	3'-8"	4'-2"	5¾"	5½"				Vertical stirrups in beams.
	5	14	11'-11"	XIII	3'-1"	3'-1"	5'-9"	1'-10"				Beam end hoop.
	6	336	7'-3"	Str.								Pile reinforcement.
	5	7	3'-8"	Str.								Transverse top of beam.
	8	8	36'-1"	Str.								Longitudinal top crashwall.
	5	36	3'-8"	Str.								Transverse top crashwall.

PIER 2 SOUTHBOUND

MARK	SIZE	NO.	LENGTH	TYPE	A	B	C	D	E	F	G	LOCATION
	5	19	42'-6"	Str.								Longitudinal top & bottom footing.
	5	29	11'-6"	Str.								Transverse top footing.
	7	80	11'-6"	Str.								Transverse bottom footing.
	8	90	4'-6"	Str.								Vertical footings to plinth.
	5	72	2'-10"	Str.								Vertical footings to plinth.
	8	90	25'-3"	Str.								Vertical plinth to cap beam.
	5	72	10'-0"	Str.								Vertical plinth.
	5	20	35'-0"	Str.								Longitudinal in plinth.
	4	36	12'-1"	V	11'-6⅜"	3'-8"	4½"					Hoops in columns.
	11	7	9'-2"	Str.								Longitudinal top of beam.
	11	2	41'-6"	XI	30'-9"	1'-8"	3'-8¾"	2'-5"				Longitudinal top of beam.
	11	2	45'-6"	XI	34'-9"	1'-8"	3'-8¾"	2'-5"				Longitudinal top of beam.
	4	4	9'-2"	Str.								Longitudinal top of beam.
	11	8	8'-1"	Str.								Longitudinal bottom of beam.
	11	2	36'-1"	Str.								Longitudinal bottom of beam.
	11	2	39'-9"	Str.								Longitudinal bottom of beam.
	5	42	3'-7"	III	3'-0"	7"	5"	5"				Vertical dowel beam to pedestal.
	6	6	16'-4"	IX	4'-2"	3'-8"	6¾"	6½"				Hoops in pedestals (interior).
	6	6	17'-6"	VI	3'-8"	5'-9"	1'-10"	3'-8"	6¾"	6½"		Hoops in pedestals (exterior).
	5	8	36'-1"	Str.								Longitudinal in sides of beam.
	5	84	16'-3"	IX	3'-8"	4'-2"	5¾"	5½"				Vertical stirrups in beams.
	5	14	11'-11"	XIII	3'-1"	3'-1"	5'-9"	1'-10"				Beam end hoop.
	6	336	7'-3"	Str.								Pile reinforcement.
	5	7	3'-8"	Str.								Transverse top of beam.
	8	8	36'-1"	Str.								Longitudinal top crashwall.
	5	36	3'-8"	Str.								Transverse top crashwall.

PIER 3 NORTHBOUND

MARK	SIZE	NO.	LENGTH	TYPE	A	B	C	D	E	F	G	LOCATION
	5	19	42'-6"	Str.								Longitudinal top & bottom footing.
	5	29	11'-6"	Str.								Transverse top footing.
	7	80	11'-6"	Str.								Transverse bottom footing.
	8	90	4'-6"	Str.								Vertical footings to plinth.
	5	72	2'-10"	Str.								Vertical footings to plinth.
	8	90	24'-3"	Str.								Vertical plinth to cap beam.
	5	72	8'-1"	Str.								Vertical plinth.
	5	16	35'-0"	Str.								Longitudinal in plinth.
	4	39	12'-1"	V	11'-6⅜"	3'-8"	4½"					Hoops in columns.
	11	7	9'-2"	Str.								Longitudinal top of beam.
	11	2	41'-6"	XI	30'-9"	1'-8"	3'-8¾"	2'-5"				Longitudinal top of beam.
	11	2	45'-6"	XI	34'-9"	1'-8"	3'-8¾"	2'-5"				Longitudinal top of beam.
	4	4	9'-2"	Str.								Longitudinal top of beam.
	11	8	8'-1"	Str.								Longitudinal bottom of beam.
	11	2	36'-1"	Str.								Longitudinal bottom of beam.
	11	2	39'-9"	Str.								Longitudinal bottom of beam.
	5	42	3'-7"	III	3'-0"	7"	5"	5"				Vertical dowel beam to pedestal.
	6	6	16'-4"	IX	4'-2"	3'-8"	6¾"	6½"				Hoops in pedestals (interior).
	6	6	17'-6"	VI	3'-8"	5'-9"	1'-10"	3'-8"	6¾"	6½"		Hoops in pedestals (exterior).
	5	8	36'-1"	Str.								Longitudinal in sides of beam.
	5	84	16'-3"	IX	3'-8"	4'-2"	5¾"	5½"				Vertical stirrups in beams.
	5	14	11'-11"	XIII	3'-1"	3'-1"	5'-9"	1'-10"				Beam end hoop.
	6	336	7'-3"	Str.								Pile reinforcement.
	5	7	3'-8"	Str.								Transverse top of beam.
	8	8	36'-1"	Str.								Longitudinal top crashwall.
	5	36	3'-8"	Str.								Transverse top crashwall.

PIER 3 NORTHBOUND (CONT'D)

MARK	SIZE	NO.	LENGTH	TYPE	A	B	C	D	E	F	G	LOCATION
PBL11	11	2	41'-6"	XI	30'-9"	1'-8"	3'-8¾"	2'-5"				Longitudinal top of beam.
PBL12	11	2	45'-6"	XI	34'-9"	1'-8"	3'-8¾"	2'-5"				Longitudinal top of beam.
PBL13	4	4	9'-2"	Str.								Longitudinal top of beam.
PBL14	11	8	8'-1"	Str.								Longitudinal bottom of beam.
PBL15	11	2	36'-1"	Str.								Longitudinal bottom of beam.
PBL16	11	2	39'-9"	Str.								Longitudinal bottom of beam.
PBV17	5	42	3'-9"	III	3'-2"	7"	5"	5"				Vertical dowel beam to pedestal.
PPH18	6	6	16'-4"	IX	4'-2"	3'-8"	6¾"	6½"				Hoops in pedestals (interior).
PPH19	6	6	17'-6"	VI	3'-8"	5'-9"	1'-10"	3'-8"	6¾"	6½"		Hoops in pedestals (exterior).
PBL20	5	8	36'-1"	Str.								Longitudinal in sides of beam.
PBS21	5	84	16'-3"	IX	3'-8"	4'-2"	5¾"	5½"				Vertical stirrups in beams.
PBL22	5	14	11'-11"	XII	3'-1"	3'-1"	5'-9"	1'-10"				Beam end hoop.
FFV23	6	336	7'-3"	Str.								Pile reinforcement.
PBT24	5	7	3'-8"	Str.								Transverse top of beam.
PSL25	8	8	36'-1"	Str.								Longitudinal top crashwall.
PST26	5	36	3'-8"	Str.								Transverse top crashwall.

PIER 3 SOUTHBOUND

MARK	SIZE	NO.	LENGTH	TYPE	A	B	C	D	E	F	G	LOCATION
PFL1	5	19	42'-6"	Str.								Longitudinal top & bottom footing.
PFT2	5	29	11'-6"	Str.								Transverse top footing.
PFT3	7	80	11'-6"	Str.								Transverse bottom footing
PFV4	8	90	4'-6"	Str.								Vertical footings to plinth
PFV5	5	72	2'-10"	Str.								Vertical footings to plinth.
PCV6	8	90	24'-3"	Str.								Vertical plinth to cap beam
PSV7	5	72	8'-1"	Str.								Vertical plinth.
PSL8	5	16	35'-0"	Str.								Longitudinal in plinth
PCS9	4	39	12'-1"	V	11'-6⅜"	3'-8"	4½"					Hoops in columns.
PBL10	11	7	9'-2"	Str.								Longitudinal top of beam.
PBL11	11	2	41'-6"	XI	30'-9"	1'-8"	3'-8¾"	2'-5"				Longitudinal top of beam.
PBL12	11	2	45'-6"	XI	34'-9"	1'-8"	3'-8¾"	2'-5"				Longitudinal top of beam.
PBL13	4	4	9'-2"	Str.								Longitudinal top of beam.
PBL14	11	8	8'-1"	Str.								Longitudinal bottom of beam.
PBL15	11	2	36'-1"	Str.								Longitudinal bottom of beam.
PBL16	11	2	39'-9"	Str.								Longitudinal bottom of beam.
PBV17	5	42	3'-8"	III	3'-1"	7"	5"	5"				Vertical dowel beam to pedestal.
PPH18	6	6	16'-4"	IX	4'-2"	3'-8"	6¾"	6½"				Hoops in pedestals (interior).
PPH19	6	6	17'-6"	VI	3'-8"	5'-9"	1'-10"	3'-8"	6¾"	6½"		Hoops in pedestals (exterior).
PBL20	5	8	36'-1"	Str.								Longitudinal in sides of beam.
PBS21	5	84	16'-3"	IX	3'-8"	4'-2"	5¾"	5½"				Vertical stirrups in beams.
PBL22	5	14	11'-11"	XIII	3'-1"	3'-1"	5'-9"	1'-10"				Beam end hoop.
FFV23	6	336	7'-3"	Str.								Pile reinforcement.
PBT24	5	7	3'-8"	Str.								Transverse top of beam.
PSL25	8	8	36'-1"	Str.								Longitudinal top crashwall.
PST26	5	36	3'-8"	Str.								Transverse top crashwall.

PIER 4 NORTHBOUND

MARK	SIZE	NO.	LENGTH	TYPE	A	B	C	D	E	F	G	LOCATION
PFL1	5	19	42'-6"	Str.								Longitudinal top & bottom footing.
PFT2	5	29	11'-6"	Str.								Transverse top footing.
PFT3	7	80	11'-6"	Str.								Transverse bottom footing.
PFV4	8	90	4'-6"	Str.								Vertical footings to plinth.
PFV5	5	72	2'-10"	Str.								Vertical footings to plinth.
PCV6	8	90	25'-0"	Str.								Vertical plinth to cap beam.
PSV7	5	72	8'-3"	Str.								Vertical plinth.
PSL8	5	18	35'-0"	Str.								Longitudinal top of beam.
PCS9	4	39	12'-1"	V	11'-6⅜"	3'-8"	4½"					Hoops in columns.
PBL10	11	7	9'-2"	Str.								Longitudinal top of beam.
PBL11	11	2	41'-6"	XI	30'-9"	1'-8"	3'-8¾"	2'-5"				Longitudinal top of beam.
PBL12	11	2	45'-6"	XI	34'-9"	1'-8"	3'-8¾"	2'-5"				Longitudinal top of beam.
PBL13	4	4	9'-2"	Str.								Longitudinal top of beam.
PBL14	11	8	8'-1"	Str.								Longitudinal bottom of beam.
PBL15	11	2	36'-1"	Str.								Longitudinal bottom of beam.
PBL16	11	2	39'-9"	Str.								Longitudinal bottom of beam
PBV17	5	42	3'-7"	III	3'-0"	7"	5"	5"				Vertical dowel beam to pedestal.
PPH18	6	6	16'-4"	IX	4'-2"	3'-8"	6¾"	6½"				Hoops in pedestals (interior).
PPH19	6	6	17'-6"	VI	3'-8"	5'-9"	1'-10"	3'-8"	6¾"	6½"		Hoops in pedestals (exterior)
PBL20	5	8	36'-1"	Str.								Longitudinal in sides of beam.
PBS21	5	84	16'-3"	IX	3'-8"	4'-2"	5¾"	5½"				Vertical stirrups in beams.
PBL22	5	14	11'-11"	XIII	3'-1"	3'-1"	5'-9"	1'-10"				Beam end hoop.
FFV23	6	336	7'-3"	Str.								Pile reinforcement.
PBT24	5	7	3'-8"	Str.								Transverse top of beam
PSL25	8	8	36'-1"	Str.								Longitudinal top crashwall.
PST26	5	36	3'-8"	Str.								Transverse top crashwall.

BAR TYPES

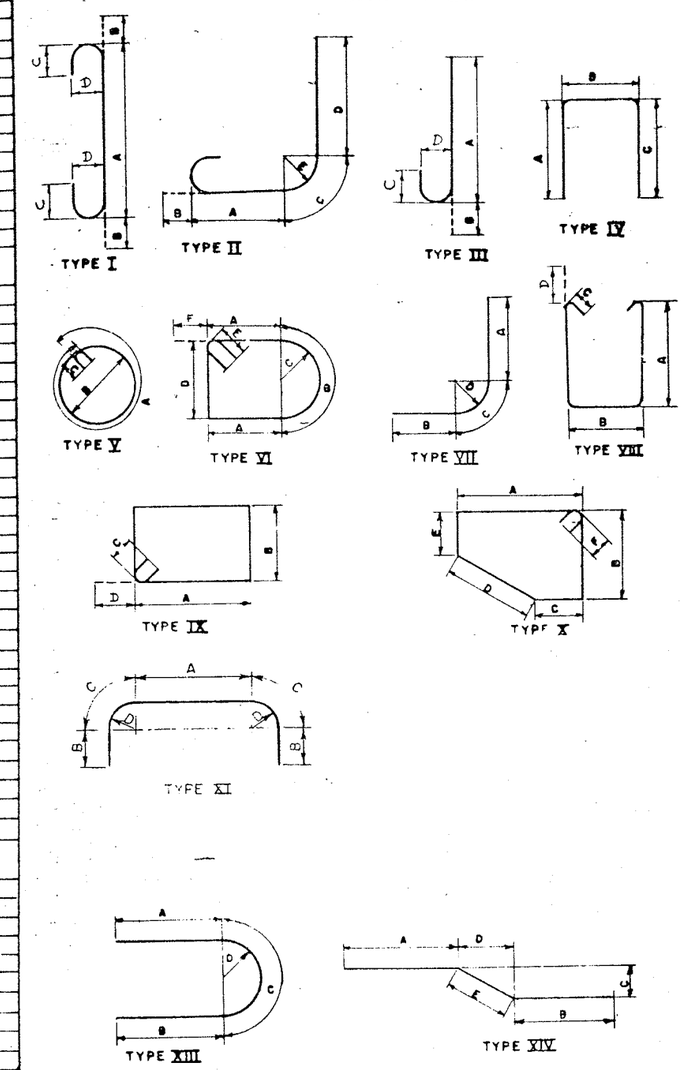

ALL DIMENSIONS ARE OUT TO OUT OF BARS

...NS MADE	IN CHARGE OF R. Parker
REVISION	DESIGNED BY F. Eckel
	DETAILED BY J. Duncan
REVISION	TRACED BY
	TRACING CHECKED BY J.F. Darcy
REVISION	

BRIDGE NO. 2
INTERSTATE ROUTE 481 OVER DEWITT YARDS

BAR LIST #1

DRAWING NO. 1 OF 5

FED. RD. DIST. NO.	STATE	PROJECT NO.	SHEET NO.	TOTAL SHEETS
1	N.Y.	I-481-2(116)	223	309

INTERSTATE ROUTE CONSTRUCTION 81.3
DUTCHMAN'S CREEK BRIDGE (NBAS 2)
ONONDAGA COUNTY

PIER 4 SOUTHBOUND

MARK	SIZE	NO.	LENGTH	TYPE	A	B	C	D	E	F	G	LOCATION
[illegible]	5	19	42'-6"	Str.								Longitudinal top & bottom footing.
[illegible]	5	29	11'-6"	Str.								Transverse top footing.
[illegible]	7	80	11'-6"	Str.								Transverse bottom footing.
[illegible]	8	90	4'-6"	Str.								Vertical footing to plinth.
[illegible]	5	72	2'-10"	Str.								Vertical footing to plinth.
[illegible]	8	90	25'-0"	Str.								Vertical plinth to cap beam.
[illegible]	5	72	8'-3"	Str.								Vertical plinth.
[illegible]	5	18	35'-0"	Str.								Longitudinal in plinth.
[illegible]	4	39	12'-1"	V	11'-6⅝"	3'-8"	4½"					Hoops in columns
10	11	7	9'-2"	Str.								Longitudinal top of beam.
11	11	2	41'-6"	XI	30'-9"	1'-8"	3'-8¾"	2'-5"				Longitudinal top of beam.
12	11	2	45'-6"	XI	34'-9"	1'-8"	3'-8¾"	2'-5"				Longitudinal top of beam.
13	4	4	9'-2"	Str.								Longitudinal top of beam.
14	11	8	8'-1"	Str.								Longitudinal bottom of beam.
15	11	2	36'-1"	Str.								Longitudinal bottom of beam.
16	11	2	39'-9"	Str.								Longitudinal bottom of beam.
17	5	42	3'-7"	III	3'-0"	7"	5"	5"				Vertical dowel beam to pedestal.
18	6	6	16'-4"	IX	4'-2"	3'-8"	6¾"	6½"				Hoops in pedestals (interior).
19	6	6	17'-6"	VI	3'-8"	5'-9"	1'-10"	3'-8"	6¾"	6½"		Hoops in pedestals (exterior).
20	5	8	36'-1"	Str.								Longitudinal in sides of beam.
21	5	84	16'-3"	IX	3'-8"	4'-2"	5¾"	5½"				Vertical stirrups in beams.
22	5	14	11'-11"	XIII	3'-1"	3'-1"	5'-9"	1'-10"				Beam end hoop.
23	6	336	7'-3"	Str.								Pile reinforcement.
24	5	7	3'-8"	Str.								Transverse top beam
25	8	8	36'-1"	Str.								Longitudinal top crashwall.
26	5	36	3'-8"	Str.								Transverse top crashwall.

PIER 5 NORTHBOUND (SOUTHBOUND IDENTICAL)

[illegible]	6	234	7'-3"	Str.								Pile reinforcement
2	10	17	43'-6"	Str.								Longitudinal Bottom Footing
3	11	16	43'-6"	Str.								Longitudinal Top Footing
4	5	95	8'-6"	Str.								Transverse Top & Bottom Footing
5	7	90	4'-0"	Str.								Dowels in Columns
6	7	90	24'-8"	Str.								Vertical Columns
7	4	63	12'-1"	V	11'-6⅝"	3'-8"	4½"					Stirrups in Columns
8	10	2	36'-1"	Str.								Longitudinal Bottom Cap Beam
9	10	2	39'-9"	Str.								" " " "
10	10	8	8'-6"	Str.								" " " "
11	5	10	36'-1"	Str.								" Sides " "
12	11	2	45'-6"	XI	34'-9"	1'-8"	3'-8¾"	2'-5"				" Top " "
13	11	2	41'-6"	XI	30'-9"	1'-8"	3'-8¾"	2'-5"				" " " "
14	11	6	8'-0"	Str.								" " " "
15	5	14	13'-1"	XIII	3'-8"	3'-8"	5'-9"	1'-10"				Horizontal Ends " "
16	5	76	13'-10"	IX	4'-2"	2'-6"	5¾"	5½"				Stirrups Cap Beam
17	5	42	3'-6"	III	2'-11"	7"	5"	5"				Vertical Pedestals
18	6	6	16'-0"	IX	3'-8"	4'-0"	6¾"	6½"				Horizontal Interior Pedestals
19	6	6	17'-5"	VI	3'-7¼"	5'-9"	1'-10"	3'-8"	6¾"	6½"		" Fascia "

PIER 6 NORTHBOUND

[illegible]	6	234	7'-3"	Str.								Pile reinforcement
2	10	17	43'-6"	Str.								Longitudinal Bottom Footing
3	11	16	43'-6"	Str.								" Top "
4	5	95	8'-6"	Str.								Transverse Top & Bottom Footing
5	7	90	4'-0"	Str.								Dowels in Columns
6	7	90	21'-11"	Str.								Vertical Columns
7	4	57	12'-1"	V	11'-6⅝"	3'-8"	4½"					Stirrups in Columns
8	10	2	36'-1"	Str.								Longitudinal Bottom Cap Beam
9	10	2	39'-9"	Str.								" " " "
10	10	8	8'-6	Str.								" " " "
11	5	10	36'-1"	Str.								" Sides " "
12	11	2	45'-6"	XI	34'-9"	1'-8"	3'-8¾"	2'-5"				" Top " "

PIER 6 NORTHBOUND CONT'D

MARK	SIZE	NO.	LENGTH	TYPE	A	B	C	D	E	F	G	LOCATION
PBL13	11	2	41'-6"	XI	30'-9"	1'-8"	3'-8¾"	2'-5"				Longitudinal Top Cap Beam
PBL14	11	6	8'-0"	Str.								" " " "
PBH15	5	14	13'-1"	XIII	3'-8"	3'-8"	5'-9"	1'-10"				Horizontal Ends " "
PBS16	5	76	13'-10"	IX	4'-2"	2'-6"	5¾"	5½"				Stirrups Cap Beam
PBV17	5	42	3'-6"	III	2'-11"	7"	5"	5"				Vertical Pedestals
PPH18	6	6	16'-0"	IX	3'-8"	4'-0"	6¾"	6½"				Horizontal Interior Pedestals
PPH19	6	6	17'-5"	VI	3'-7¼"	5'-9"	1'-10"	3'-8"	6¾"	6½"		" Fascia "

PIER 6 SOUTHBOUND

FFV1	6	234	7'-3"	Str.								Pile reinforcement
PFL2	10	17	43'-6"	Str.								Longitudinal Bottom Footing
PFL3	11	16	43'-6"	Str.								" Top "
PFT4	5	95	8'-6"	Str.								Transverse Top & Bottom Footing
PFV5	7	90	4'-0"	Str.								Dowels in Columns
PCV6	7	90	25'-4"	Str.								Vertical Columns
PCS7	4	66	12'-1"	V	11'-6⅝"	3'-8"	4½"					Stirrups in Column
PBL8	10	2	36'-1"	Str.								Longitudinal Bottom Cap Beam
PBL9	10	2	39'-9"	Str.								" " " "
PBL10	10	8	8'-6"	Str.								" " " "
PBL11	5	10	36'-1"	Str.								" Sides " "
PBL12	11	2	45'-6"	XI	34'-9"	1'-8"	3'-8¾"	2'-5"				" Top " "
PBL13	11	2	41'-6"	XI	30'-9"	1'-8"	3'-8¾"	2'-5"				" " " "
PBL14	11	6	8'-0"	Str.								" " " "
PBH15	5	14	13'-1"	XIII	3'-8"	3'-8"	5'-9"	1'-10"				Horizontal Ends Cap Beam
PBS16	5	76	13'-10"	IX	4'-2"	2'-6"	5¾"	5½"				Stirrups Cap Beam
PBV17	5	42	3'-6"	III	2'-11"	7"	5"	5"				Vertical Pedestals
PPH18	6	6	16'-0"	IX	3'-8"	4'-0"	6¾"	6½"				Horizontal Interior Pedestals
PPH19	6	6	17'-5"	VI	3'-7¼"	5'-9"	1'-10"	3'-8"	6¾"	6½"		Horizontal Fascia Pedestals

BAR TYPES

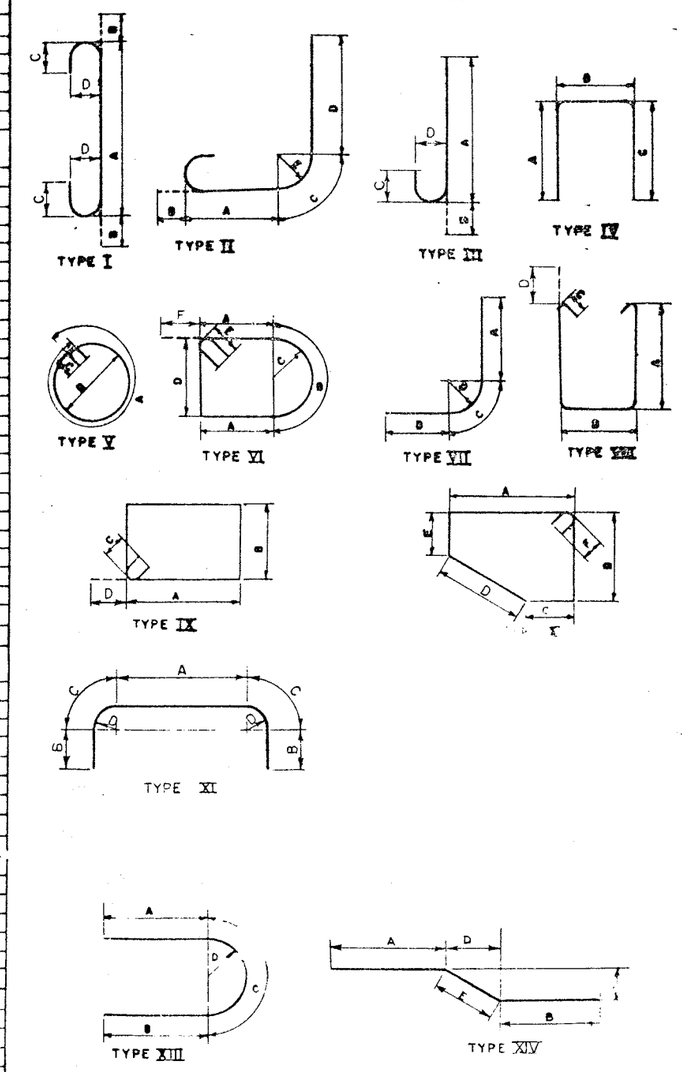

ALL DIMENSIONS ARE OUT TO OUT OF BAR

IN CHARGE OF	R. Parker
DESIGNED BY	F. Eckel
DETAILED BY	J. Durrant
TRACED BY	
TRACING CHECKED BY	J.F. Darcy

BRIDGE NO. 2
INTERSTATE ROUTE 481 OVER DEWITT YARDS

BAR LIST #2

DRAWING NO. 15 OF 50

FED. RD. REG. NO.	STATE	FEDERAL AID PROJECT NO.	SHEET NO.	TOTAL SHEETS
1	N.Y.	I-481-2(16)	224	309

INTERSTATE ROUTE CONSTRUCTION 570
BUTTERNUT INTERCHANGE (PHASE 2)
ONONDAGA COUNTY

PIER 7 NORTHBOUND

MARK	SIZE	NO.	LENGTH	TYPE	A	B	C	D	E	F	G	LOCATION
PFL1	7	17	41'-6"	Str								Longitudinal bottom of footing.
PFL2	8	15	41'-6"	Str								Longitudinal top of footing.
PFT3	5	29	8'-6"	Str								Transverse top of footing.
PFT4	5	56	8'-6"	Str								Transverse bottom of footing.
PFV5	7	72	4'-0"	Str								Dowels footing to column.
PCV6	7	72	27'-1"	Str								Vertical in columns.
PCS7	4	75	11'-1"	V	10'-1½"	3'-2"	0'-5¾"					Hoops in columns.
PBL8	10	2	38'-4"	Str								Longitudinal in bottom of beam.
PBL9	10	6	7'-4"	Str								Longitudinal in bottom of beam.
PBL10	11	4	8'-8"	Str								Longitudinal in top of beam.
PBL11	11	2	40'-0"	XI	30'-3"	1'-2"	3'-8¾"	2'-5"				Longitudinal in top of beam.
PPH12	6	6	14'-5"	IX	3'-8"	3'-2"	6¾"	6½"				Hoops interior pedestals.
PPH13	6	6	15'-2"	VI	3'-1¾"	5'-0"	1'-7"	3'-2"	6¾"	6½"		Hoops exterior pedestals.
PBV14	5	42	3'-4"	III	2'-9"	7"	5"	5"				Dowels pier beam to pedestals.
PBL15	5	8	35'-7"	Str								Longitudinal sides of beam.
PBL16	11	2	44'-0"	XI	34'-3"	1'-2"	3'-8¾"	2'-5"				Longitudinal in top of beam.
PBL17	10	2	35'-7"	Str								Longitudinal in bottom of beam.
PBS18	4	72	12'-2"	IX	3'-8"	2'-2"	4½"	4½"				Stirrups pier beam.
PBH19	5	12	11'-2"	XIII	3'-1"	3'-1"	5'-0"	1'-7"				Hoop end of pier beam.
FFV20	6	156	7'-3"	Str								Pile reinforcement.

PIER 7 SOUTHBOUND

MARK	SIZE	NO.	LENGTH	TYPE	A	B	C	D	E	F	G	LOCATION
PFL1	7	17	41'-6"	Str								Longitudinal bottom of footing.
PFL2	8	15	41'-6"	Str								Longitudinal top of footing.
PFT3	5	29	8'-6"	Str								Transverse top of footing.
PFT4	5	56	8'-6"	Str								Transverse bottom of footing.
PFV5	7	72	4'-0"	Str								Dowels footing to column.
PCV6	7	72	26'-5"	Str								Vertical in columns.
PCS7	4	78	11'-1"	V	10'-1½"	3'-2"	0'-5¾"					Hoops in columns.
PBL8	10	2	38'-4"	Str								Longitudinal in bottom of beam.
PBL9	10	6	7'-4"	Str								Longitudinal in bottom of beam.
PBL10	11	4	8'-8"	Str								Longitudinal in top of beam.
PBL11	11	2	40'-0"	XI	30'-3"	1'-2"	3'-8¾"	2'-5"				Longitudinal in top of beam.
PPH12	6	6	14'-5"	IX	3'-8"	3'-2"	6¾"	6½"				Hoops interior pedestals.
PPH13	6	6	15'-2"	VI	3'-1¾"	5'-0"	1'-7"	3'-2"	6¾"	6½"		Hoops exterior pedestals.
PBV14	5	42	3'-4"	III	2'-9"	7"	5"	5"				Dowels pier beam to pedestals.
PBL15	5	8	35'-7"	Str								Longitudinal sides of beam.
PBL16	11	2	44'-0"	XI	34'-3"	1'-2"	3'-8¾"	2'-5"				Longitudinal in top of beam.
PBL17	10	2	35'-7"	Str								Longitudinal in bottom of beam.
PBS18	4	72	12'-2"	IX	3'-8"	2'-2"	4½"	4½"				Stirrups pier beam.
PBH19	5	12	11'-2"	XIII	3'-1"	3'-1"	5'-0"	1'-7"				Hoop end of pier beam.
FFV20	6	156	7'-3"	Str								Pile reinforcement.

PIER 8 NORTHBOUND

MARK	SIZE	NO.	LENGTH	TYPE	A	B	C	D	E	F	G	LOCATION
PFL1	7	17	41'-6"	Str								Longitudinal bottom of footing.
PFL2	8	15	41'-6"	Str								Longitudinal top of footing.
PFT3	5	29	8'-6"	Str								Transverse top of footing.
PFT4	5	56	8'-6"	Str								Transverse bottom of footing.
PFV5	7	72	4'-0"	Str								Dowels footing to column.
PCV6	7	72	26'-10"	Str								Vertical in columns.
PCS7	4	72	11'-1"	V	10'-1½"	3'-2"	0'-5¾"					Hoops in columns.
PBL8	10	2	38'-4"	Str								Longitudinal in bottom of beam.
PBL9	10	6	7'-4"	Str								Longitudinal in bottom of beam.
PBL10	11	4	8'-8"	Str								Longitudinal in top of beam.
PBL11	11	2	40'-0"	XI	30'-3"	1'-2"	3'-8¾"	2'-5"				Longitudinal in top of beam.
PPH12	6	6	14'-5"	IX	3'-8"	3'-2"	6¾"	6½"				Hoops interior pedestals.
PPH13	6	6	15'-2"	VI	3'-1¾"	5'-0"	1'-7"	3'-2"	6¾"	6½"		Hoops exterior pedestals.
PBV14	5	42	3'-4"	III	2'-9"	7"	5"	5"				Dowels pier beam to pedestals.
PBL15	5	8	35'-7"	Str								Longitudinal sides of beam.
PBL16	11	2	44'-0"	XI	34'-3"	1'-2"	3'-8¾"	2'-5"				Longitudinal in top of beam.
PBL17	10	2	35'-7"	Str								Longitudinal in bottom of beam.
PBS18	4	72	12'-2"	IX	3'-8"	2'-2"	4½"	4½"				Stirrups pier beam.
PBH19	5	12	11'-2"	XIII	3'-1"	3'-1"	5'-0"	1'-7"				Hoop end of pier beam.
FFV20	6	156	7'-3"	Str								Pile reinforcement.

PIER 8 SOUTHBOUND

MARK	SIZE	NO.	LENGTH	TYPE	A	B	C	D	E	F	G	LOCATION
PFL1	7	17	41'-6"	Str								Longitudinal bottom of footing.
PFL2	8	15	41'-6"	Str								Longitudinal top of footing.
PFT3	5	29	8'-6"	Str								Transverse top of footing.
PFT4	5	56	8'-6"	Str								Transverse bottom of footing.
PFV5	7	72	4'-0"	Str								Dowels footing to column.
PCV6	7	72	27'-11"	Str								Vertical in columns.
PCS7	4	75	11'-1"	V	10'-1½"	3'-2"	0'-5¾"					Hoops in columns.
PBL8	10	2	38'-4"	Str								Longitudinal in top of beam.
PBL9	10	6	7'-4"	Str								Longitudinal in top of beam.
PBL10	11	4	8'-8"	Str								Longitudinal in top of beam.
PBL11	11	2	40'-0"	XI	30'-3"	1'-2"	3'-8¾"	2'-5"				Longitudinal in bottom of beam.
PPH12	6	6	14'-5"	IX	3'-8"	3'-2"	6¾"	6½"				Hoops interior pedestals.
PPH13	6	6	15'-2"	VI	3'-1¾"	5'-0"	1'-7"	3'-2"	6¾"	6½"		Hoops exterior pedestals.
PBV14	5	42	3'-4"	III	2'-9"	7"	5"	5"				Dowels pier beam to pedestals.
PBL15	5	8	35'-7"	Str								Longitudinal sides of beam.
PBL16	11	2	44'-0"	XI	34'-3"	1'-2"	3'-8¾"	2'-5"				Longitudinal in top of beam.
PBL17	10	2	35'-7"	Str								Longitudinal in bottom of beam.
PBS18	4	72	12'-2"	IX	3'-8"	2'-2"	4½"	4½"				Stirrups pier beam.
PBH19	5	12	11'-2"	XIII	3'-1"	3'-1"	5'-0"	1'-7"				Hoop end of pier beam.
FFV20	6	156	7'-3"	Str								Pile reinforcement.

PIER 9 NORTHBOUND

MARK	SIZE	NO.	LENGTH	TYPE	A	B	C	D	E	F	G	LOCATION
PFL1	7	17	41'-6"	Str								Longitudinal bottom of footing.
PFL2	8	15	41'-6"	Str								Longitudinal top of footing.
PFT3	5	29	8'-6"	Str								Transverse top of footing.
PFT4	5	56	8'-6"	Str								Transverse bottom of footing.
PFV5	7	72	4'-0"	Str								Dowels footing to column.
PCV6	7	72	25'-10"	Str								Vertical in columns.
PCS7	4	69	11'-1"	V	10'-1½"	3'-2"	0'-5¾"					Hoops in columns.
PBL8	10	2	38'-4"	Str								Longitudinal in bottom of beam.
PBL9	10	6	7'-4"	Str								Longitudinal in bottom of beam.
PBL10	11	4	8'-8"	Str								Longitudinal in top of beam.
PBL11	11	2	40'-0"	XI	30'-3"	1'-2"	3'-8¾"	2'-5"				Longitudinal in top of beam.
PPH12	6	6	14'-5"	IX	3'-8"	3'-2"	6¾"	6½"				Hoops interior pedestals.
PPH13	6	6	15'-2"	VI	3'-1¾"	5'-0"	1'-7"	3'-2"	6¾"	6½"		Hoops exterior pedestals.
PBV14	5	42	3'-4"	III	2'-9"	7"	5"	5"				Dowels pier beam to pedestals.
PBL15	5	8	35'-7"	Str								Longitudinal sides of beam.
PBL16	11	2	44'-0"	XI	34'-3"	1'-2"	3'-8¾"	2'-5"				Longitudinal in top of beam.
PBL17	10	2	35'-7"	Str								Longitudinal in bottom of beam.
PBS18	4	72	12'-2"	IX	3'-8"	2'-2"	4½"	4½"				Stirrups pier beam.
PBH19	5	12	11'-2"	XIII	3'-1"	3'-1"	5'-0"	1'-7"				Hoop end of pier beam.
FFV20	6	156	7'-3"	Str								Pile reinforcement.

BAR TYPES

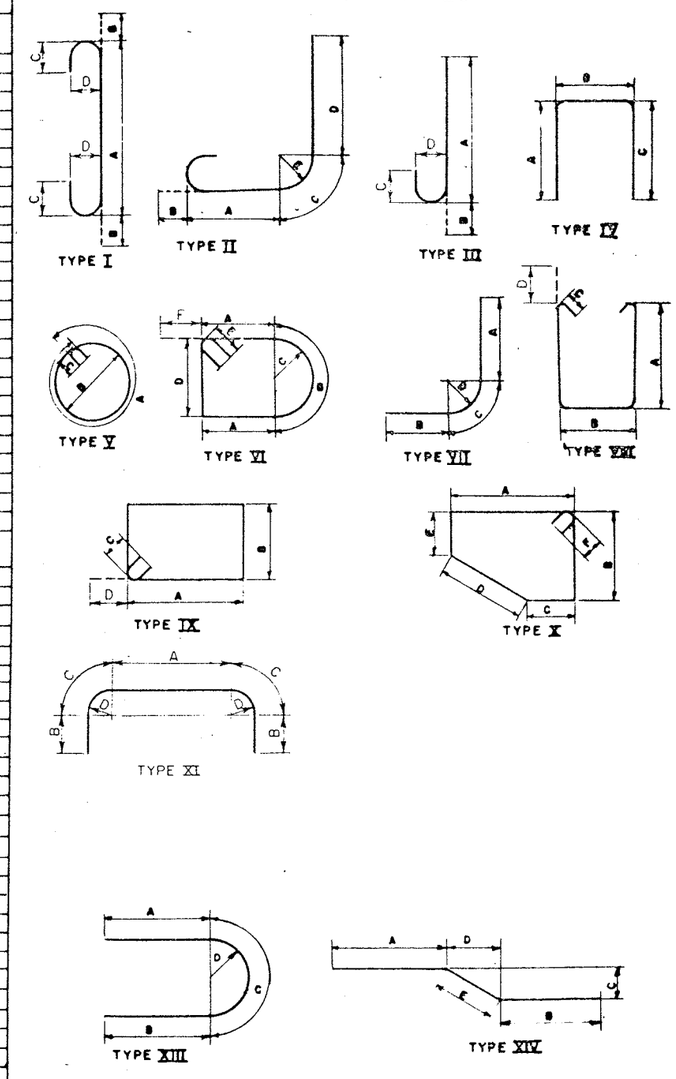

ALL DIMENSIONS ARE OUT TO OUT OF BARS

B MADE	
EVISION	
EVISION	
EVISION	

IN CHARGE OF R. Parker
DESIGNED BY F. Eckel
DETAILED BY J. Dunnett
TRACED BY
TRACING CHECKED BY J.F. Darcy

BRIDGE NO. 2
INTERSTATE ROUTE 481 OVER DEWITT YARDS

BAR LIST #5

FED. RD. REG. NO.	STATE	FEDERAL AID PROJECT NO.	SHEET NO.	TOTAL SHEETS
1	N.Y.	I-BRC-3(29) I-481-2(16)	225	309

INTERSTATE ROUTE CONNECTION 570
BUTTERNUT INTERCHANGE (PHASE 2)
ONONDAGA COUNTY

PIER 9 SOUTHBOUND

MARK	SIZE	NO.	LENGTH	TYPE	A	B	C	D	E	F	G	LOCATION
PFL1	8	14	41'-6"	Str.								Bottom of footing (Longitudinal).
PFL2	8	16	41'-6"	Str.								Top of footing (Longitudinal).
PFT3	5	88	8'-6"	Str.								Top & bottom of footing (Transverse).
PFY4	7	69	4'-0"	Str.								Dowels footing to column.
PCV5	7	69	26'-7"	Str.								Vertical column.
PCS6	4	72	11'-1"	V	10'-1½"	3'-2"	5¾"					Hoops in column.
PBL7	10	2	38'-5"	Str.								Top of beam (Longitudinal).
PBL8	10	6	7'-10"	Str.								Top of beam (Longitudinal).
PBL9	11	4	8'-8"	Str.								Bottom of beam (Longitudinal).
PBL10	11	2	40'-0"	XI	30'-3"	1'-2"	3'-8¾"	2'-5"				Bottom of beam (Longitudinal).
PBH11	6	6	14'-4"	IX	3'-8"	3'-2"	6¾"	6½"				Hoops in interior pedestals.
PBH12	6	6	15'-1"	VI	3'-4¾"	5'-0"	1'-7"	3'-2"	6¾"	6½"		Hoops in exterior pedestals.
PDY13	5	42	3'-4"	III	2'-9"	7"	5"	5"				Dowels pier beam to pedestals.
PBL14	5	8	35'-9"	Str.								Side of beam (Longitudinal).
PBL15	11	2	44'-0"	XI	34'-3"	1'-2"	3'-8¾"	2'-5"				Top of beam (Longitudinal).
PBL16	10	2	35'-9"	Str.								Bottom of beam (Longitudinal).
PBS17	5	60	12'-3"	IX	3'-8"	2'-0"	5¾"	5½"				Stirrups capbeam.
PBL18	5	10	11'-2"	XIII	3'-1"	3'-1"	5'-0"	1'-7"				Longitudinal in capbeam.
PFY19	6	168	7'-3"	Str.								Pile reinforcement.

PIER 10 NORTHBOUND

PFL1	9	32	41'-6"	Str.								Longitudinal (Top & bottom) footing.
PFT3	5	108	8'-6"	Str.								Transverse (Top & bottom) footing.
PFY4	7	72	4'-6"	Str.								Dowels footing to column.
PCV5	7	72	24'-10"	Str.								Vertical in columns.
PCS6	4	61	11'-1"	V	10'-1½"	3'-2"	5¾"					Hoops in columns.
PBL7	10	2	38'-3"	Str.								Longitudinal in bottom cap beam.
PBL8	10	3	7'-10"	Str.								Longitudinal in bottom cap beam.
PBL9	10	2	35'-3"	Str.								Longitudinal in bottom cap beam.
PBL10	11	4	8'-8"	Str.								Longitudinal in top cap beam.
PBL11	11	2	39'-8"	XI	29'-11"	1'-2"	3'-8¾"	2'-5"				Longitudinal in top cap beam.
PBL12	11	2	43'-8"	XI	33'-11"	1'-2"	3'-8¾"	2'-5"				Longitudinal in top cap beam.
PBL13	5	5	35'-2"	Str.								Longitudinal in sides cap beam.
PBH14	5	12	11'-2"	XIII	3'-1"	3'-1"	5'-0"	1'-7"				Horizontal ends of cap beam.
PBS15	5	56	12'-3"	IX	3'-8"	2'-0"	5¾"	5½"				Stirrups in cap beam.
PDY16	5	42	3'-4"	III	2'-9"	7"	5"	5"				Vertical in pedestals.
PBH17	6	6	13'-3"	IX	3'-4"	3'-2"	6¾"	6½"				Horizontal interior pedestals
PBH18	6	6	14'-11"	VI	5'-0"	5'-0"	1'-7"	3'-2"	6¾"	6½"		Horizontal fascia pedestals.
PFY19	6	168	7'-3"	Str.								Vertical in piles.

PIER 0 SOUTHBOUND

PFL1	7	32	41'-6"	Str.								Longitudinal (Top & bottom) footing.
PFT3	5	108	8'-6"	Str.								Transverse (Top & bottom) footing.
PFY4	7	72	4'-6"	Str.								Dowels footing to column.
PCV5	7	72	24'-9"	Str.								Vertical in columns.
PCS6	4	66	11'-1"	V	10'-1½"	3'-2"	5¾"					Hoops in columns.
PBL7	10	2	38'-3"	Str.								Longitudinal in bottom cap beam.
PBL8	10	6	7'-10"	Str.								Longitudinal in bottom cap beam.
PBL9	10	2	35'-3"	Str.								Longitudinal in bottom cap beam.
PBL10	11	4	8'-8"	Str.								Longitudinal in top cap beam.
PBL11	11	2	39'-8"	XI	29'-11"	1'-2"	3'-8¾"	2'-5"				Longitudinal in top cap beam.
PBL12	11	2	43'-8"	XI	33'-11"	1'-2"	3'-8¾"	2'-5"				Longitudinal in top cap beam.
PBL13	5	8	35'-2"	Str.								Longitudinal in sides cap beam.
PBH14	5	12	11'-2"	XIII	3'-1"	3'-1"	5'-0"	1'-7"				Horizontal ends of cap beam.
PBS15	5	56	12'-3"	IX	3'-8"	2'-0"	5¾"	5½"				Stirrups in cap beam.
PDY16	5	42	3'-4"	III	2'-9"	7"	5"	5"				Vertical in pedestals.
PBH17	6	6	13'-9"	IX	3'-4"	3'-2"	6¾"	6½"				Horizontal interior pedestals.
PBH18	6	6	14'-11"	VI	3'-0"	5'-0"	1'-7"	3'-2"	6¾"	6½"		Horizontal fascia pedestals.
PFY19	6	168	7'-3"	Str.								Vertical in piles.

PIER 1 SOUTHBOUND (PIER 1 NORTHBOUND IDENTICAL)

MARK	SIZE	NO.	LENGTH	TYPE	A	B	C	D	E	F	G	LOCATION
PFL1	8	16	43'-6"	Str.								Longitudinal-Top of footing.
PFL2	10	16	43'-6"	Str.								Longitudinal-Bottom of footing.
PFT3	5	95	8'-6"	Str.								Transverse-Top & Bottom footing.
PFY4	7	90	4'-0"	Str.								Dowels in footing.
PCV5	7	90	24'-11"	Str.								Vertical in column.
PCS6	4	63	12'-1"	V	11'-6¾"	3'-8"	4½"					Hoops in column.
PBL7	9	2	36'-1"	Str.								Longitudinal-Bottom of beam.
PBL8	9	2	39'-6"	Str.								Longitudinal-Bottom of beam.
PBL9	9	6	7'-6"	Str.								Longitudinal-Bottom of beam.
PBL10	5	10	36'-1"	Str.								Longitudinal-Sides of beam.
PBL11	10	4	7'-6"	Str.	✓	✓	✓	✓				Longitudinal-Top of beam.
PBL12	10	2	41'-6"	XI	30'-9"	1'-11"	3'-10"	2'-5"				Longitudinal-Top of beam.
PBL13	10	2	45'-6"	XI	34'-9"	1'-11"	3'-10"	2'-5"				Longitudinal-Top of beam.
PBH14	5	14	13'-1"	XIII	3'-8"	3'-8"	5'-9"	1'-10"				Pier cap end hoops.
PBS15	4	48	13'-11"	IX	4'-2"	2'-7"	4½"	4½"				Stirrups in cap beam.
PPH16	6	6	16'-0"	IX	3'-8"	4'-0"	6¾"	6½"				Hoops in interior pedestals.
PPH17	6	6	17'-5"	VI	3'-7¼"	5'-9"	1'-10"	3'-8"	6¾"	6½"		Hoops in fascia pedestals.
PBY18	5	42	3'-6"	III	2'-11"	7"	5"	5"				Dowels pier beam to pedestal
PFY19	6	156	7'-3"	Str.								Pile reinforcement.

BAR TYPES

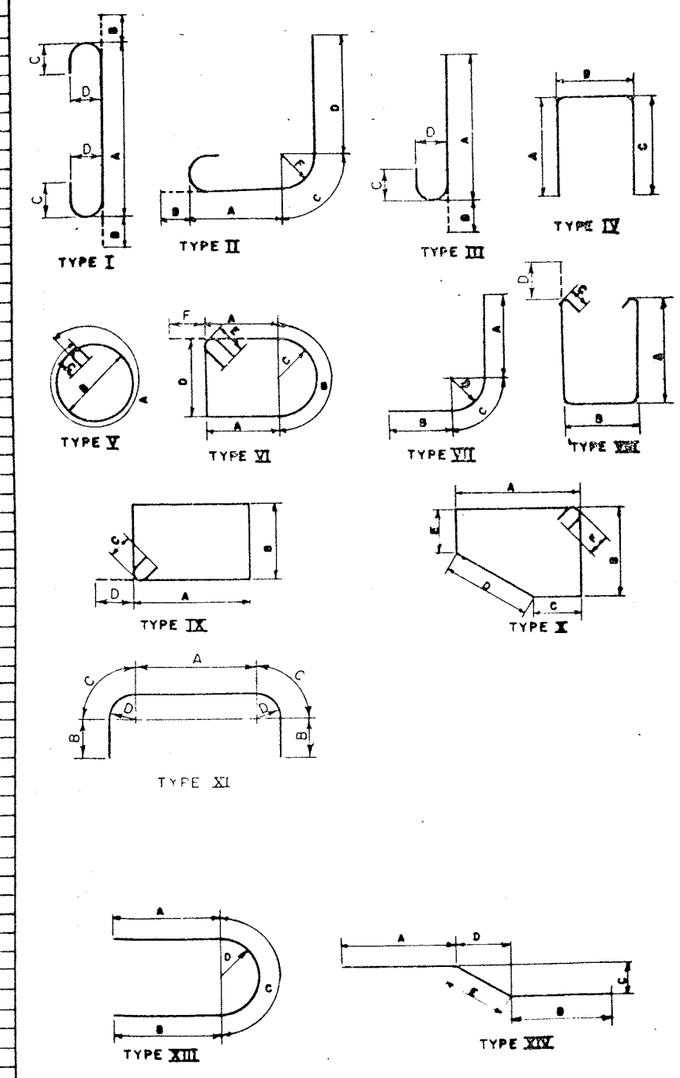

ALL DIMENSIONS ARE OUT TO OUT OF BARS

NS MADE
REVISION
REVISION
REVISION

IN CHARGE OF R. Parker
DESIGNED BY F. Eckel
DETAILED BY J. DURRANT
TRACED BY
TRACING CHECKED BY J.F.D.

BRIDGE NO. 2
INTERSTATE ROUTE 481 OVER DEWITT YARDS

BAR LIST #4

F.A.S.H. NO.

FED. RD. REG NO.	STATE	FEDERAL AID PROJECT NO.	SHEET NO	TOTAL SHEETS
1	NEW YORK	F-890-3(23) F-651-2(116)	226	309

INTERSTATE ROUTE CONNECTION 570
BUTTERNUT INTERCHANGE (PHASE 2)
ONONDAGA COUNTY

PIER 10 N.B.

MARK	SIZE	NO.	LENGTH	TYPE	A	B	C	D	E	F	G	LOCATION
PFL1	10	14	41'-6"	Str								Longitudinal in bottom of footing
PFL2	8	16	41'-6"	Str								Longitudinal in top of footing
PFT3	5	102	5'-6"	Str								Transverse top & bottom footing
PFV4	7	72	4'-3"	Str								Dowels footing to column
PCV5	7	72	22'-6"	Str								Vertical in columns
PCS6	4	60	10'-11"	V	10'-1½"	3'-2"	0'-4½"					Hoops in columns
PBS7	4	72	12'-2"	IX	3'-8"	2'-2"	4½"	4½"				Stirrups in cap beam
PBL8	10	2	37'-10"	Str								Longitudinal in bottm of beam
PBL9	10	6	7'-4"	Str								Longitudinal in bottom of beam
PBL10	11	4	7'-8"	Str								Longitudinal in top of beam
PBL11	11	2	39'-8"	XI	29'-11"	1'-2"	3'-8¾"	2'-5"				Longitudinal in top of beam
PBH12	6	6	13'-9"	IX	3'-4"	3'-2"	6¾"	6½"				Hoops in pedestals (interior)
PBH13	6	6	14'-11"	VI	3'-0"	5'-0"	1'-7"	3'-2"	6¾"	6½"		Hoops in pedestals (exterior)
PBV14	5	42	3'-1"	III	2'-6"	7"	5"	5"				Dowels pier beam to pedestals
PBL15	5	8	35'-3"	Str								Longitudinal in sides of beam
PBL16	11	2	43'-8"	XI	33'-11"	1'-2"	3'-8¾"	2'-5"				Longitudinal in top of beam
PBL17	10	2	35'-3"	Str								Longitudinal in bottom of beam
PBL18	5	12	11'-2"	XIII	3'-1"	3'-1"	5'-0"	1'-7"				Horizontal in ends of beam
PFV19	6	144	7'-3"	Str								Reinforcement in piles

PIER 11 S.B.

PFL1	10	14	41'-6"	Str								Longitudinal in bottom of footing
PFL2	8	16	41'-6"	Str								Longitudinal in top of footing
PFT3	5	102	8'-6"	Str								Transverse top & bottom of footing
PFV4	7	72	4'-3"	Str								Dowels footing to column
PCV5	7	72	22'-6"	Str								Vertical in columns
PCS6	4	60	10'-11"	V	10'-1½"	3'-2"	4½"					Hoops in columns
PBS7	4	72	12'-2"	IX	3'-8"	2'-2"	4½"	4½"				Stirrups in cap beam
PBL8	10	2	37'-10'	Str								Longitudinal in bottom of beam
PBL9	10	6	7'-4"	Str								Longitudinal in bottom of beam
PBL10	11	4	7'-8"	Str								Longitudinal in top of beam
PBL11	11	2	39'-8"	XI	29'-11"	1'-2"	3'-8¾"	2'-5"				Longitudinal in top of beam
PBH12	6	6	13'-9"	IX	3'-4"	3'-2"	6¾"	6½"				Hoops in pedestals (interior)
PBH13	6	6	14'-11"	VI	3'-0"	5'-0"	1'-7"	3'-2"	6¾"	6½"		Hoops in pedestals (exterior)
PBV14	5	42	3'-1"	III	2'-6"	7"	5"	5"				Dowels pier beam to pedestals
PBL15	5	8	35'-3"	Str								Longitudinal in sides of beam
PBL16	11	2	43'-8"	XI	33'-11"	1'-2"	3'-8¾"	2'-5"				Longitudinal in top of beam
PBL17	10	2	35'-3"	Str								Longitudinal in bottom of beam
PBL18	5	12	11'-2"	XIII	3'-1"	3'-1"	5'-0"	1'-7"				Horizontal in ends of beam
PFV19	6	144	7'-3"	Str								Reinforcement in piles

PIER 12 N.B.

PFL1	10	14	41'-6"	Str								Longitudinal in bottom of footing
PFL2	8	16	41'-6"	Str								Longitudinal in top of footing
PFT3	5	102	8'-6"	Str								Transverse top & bottom footing
PFV4	7	72	4'-3"	Str								Dowels footing to column
PCV5	7	72	19'-2"	Str								Vertical in columns
PCS6	4	51	10'-11"	V	10'-1½"	3'-2"	4½"					Hoops in columns
PBS7	4	72	12'-2"	IX	3'-8"	2'-2"	4½"	4½"				Stirrups in cap beam
PBL8	10	2	37'-10"	Str								Longitudinal in bottom of beam
PBL9	10	6	7'-4"	Str								Longitudinal in bottom of beam
PBL10	11	4	7'-8"	Str								Longitudinal in top of beam
PBL11	11	2	39'-8"	XI	29'-11"	1'-2"	3'-8¾"	2'-5"				Longitudinal in top of beam
PBH12	6	6	13'-9"	IX	3'-4"	3'-2"	6¾"	6½"				Hoops in pedestals (interior)
PBH13	6	6	14'-11"	VI	3'-0"	5'-0"	1'-7"	3'-2"	6¾"	6½"		Hoops in pedestals (exterior)
PBV14	5	42	3'-1"	III	2'-6"	7"	5"	5"				Dowels pier beam to pedestals
PBL15	5	8	35'-3"	Str								Longitudinal in sides of beam
PBL16	11	2	43'-8"	XI	33'-11"	1'-2"	3'-8¾"	2'-5"				Longitudinal in top of beam
PBL17	10	2	35'-3"	Str								Longitudinal in bottom of beam
PBL18	5	12	11'-2"	XIII	3'-1"	3'-1"	5'-0"	1'-7"				Horizontal in ends of beam
PFV19	6	144	7'-3"	Str								Reinforcement in piles

PIER 12 S.B. IDENTICAL TO PIER 11 N.B.

PIER 13 N.B.

MARK	SIZE	NO.	LENGTH	TYPE	A	B	C	D	E	F	G	LOCATION
PFL1	10	27	41'-6"	Str								Longitudinal in top & bottom of footing
PFT2	5	61	7'-0"	Str								Transverse in top & bottom of footing
PFV3	7	75	4'-6"	Str								Dowels footing to columns
PCV5	7	75	15'-0"	Str								Vertical in columns
PCS8	4	39	10'-11"	V	10'-1½"	3'-2"	0'-4½"					Hoops in columns
PBL9	10	6	6'-10"	Str								Longitudinal in bottom of beam
PBL10	11	4	7'-8"	Str								Longitudinal in top of beam
PBL11	11	2	39'-8"	XI	29'-11"	1'-2"	3'-8¾"	2'-5"				Longitudinal in top of beam
PBL12	11	2	43'-8"	XI	33'-11"	1'-2"	3'-8¾"	2'-5"				Longitudinal in top of beam
PBL13	5	8	35'-2½"	Str								Longitudinal in beam sides
PBL14	10	2	35'-2½"	Str								Longitudinal in bottom of beam
PBL15	10	2	38'-2½"	Str								Longitudinal in bottom of beam
PBL16	5	12	11'-2"	XIII	3'-1"	3'-1"	5'-0"	1'-7"				Beam end hoop.
PBV17	5	42	3'-1"	III	2'-6"	7"	5"	5"				Vertical dowel beam to pedestal
PBH18	6	6	13'-9"	IX	3'-4"	3'-2"	6¾"	6½"				Hoops in pedestals (interior)
PBH19	6	6	14'-11"	VI	3'-0"	5'-0"	1'-7"	3'-2"	6¾"	6½"		Hoops in pedestals (exterior)
PFV20	6	144	7'-3"	Str								Pile reinforcement
PBS21	4	68	12'-2"	IX	3'-8"	2'-2"	0'-4½"	4½"				Stirrups in cap beam

PIER 13 S.B. IDENTICAL TO PIER 12 N.B.

PIER 14 N.B.

PFL1	10	27	41'-6"	Str								Longitudinal in top & bottom of footing
PFT2	5	61	7'-0"	Str								Transverse top & bottom of footing
PFV3	7	24	4'-6"	Str								Dowels footing to columns
PFV4	10	56	7'-2"	III	5'-7"	1'-7½"	1'-0¾"	1'-3¼"				Dowels footing to columns
PCV6	10	56	10'-11"	Str								Vertical in columns (exterior)
PCV7	7	24	11'-4"	Str								Vertical in columns (interior)
PCS8	4	27	10'-11"	V	10'-1½"	3'-2"	0'-4½"					Hoops in columns
PBL9	10	6	6'-10"	Str								Longitudinal in bottom of beam
PBL10	11	4	7'-8"	Str								Longitudinal in top of beam
PBL11	11	2	39'-8"	XI	29'-11"	1'-2"	3'-8¾"	2'-5"				Longitudinal in top of beam
PBL12	11	2	43'-8"	XI	33'-11"	1'-2"	3'-8¾"	2'-5"				Longitudinal in top of beam
PBL13	5	8	35'-2½"	Str								Longitudinal in beam sides
PBL14	10	2	35'-2½"	Str								Longitudinal in bottom of beam
PBL15	10	2	38'-2½"	Str								Longitudinal in bottom of beam
PBL16	5	12	11'-2"	XIII	3'-1"	3'-1"	5'-0"	1'-7"				Beam end hoop
PBV17	5	42	3'-1"	III	2'-6"	7"	5"	5"				Vertical dowel beam to pedestal
PBH18	6	6	13'-9"	IX	3'-4"	3'-2"	6¾"	6½"				Hoops in pedestals (interior)
PBH19	6	6	14'-11"	VI	3'-0	5'-0"	1'-7"	3'-2"	6¾"	6½"		Hoops in pedestals (exterior)
PFV20	6	144	7'-3"	Str								Pile reinforcement
PBS21	4	68	12'-2"	IX	3'-8"	2'-2"	0'-4½"	4½"				Stirrups in cap beam

PIER 14 S.B. IDENTICAL TO PIER 13 N.B.

BAR TYPES

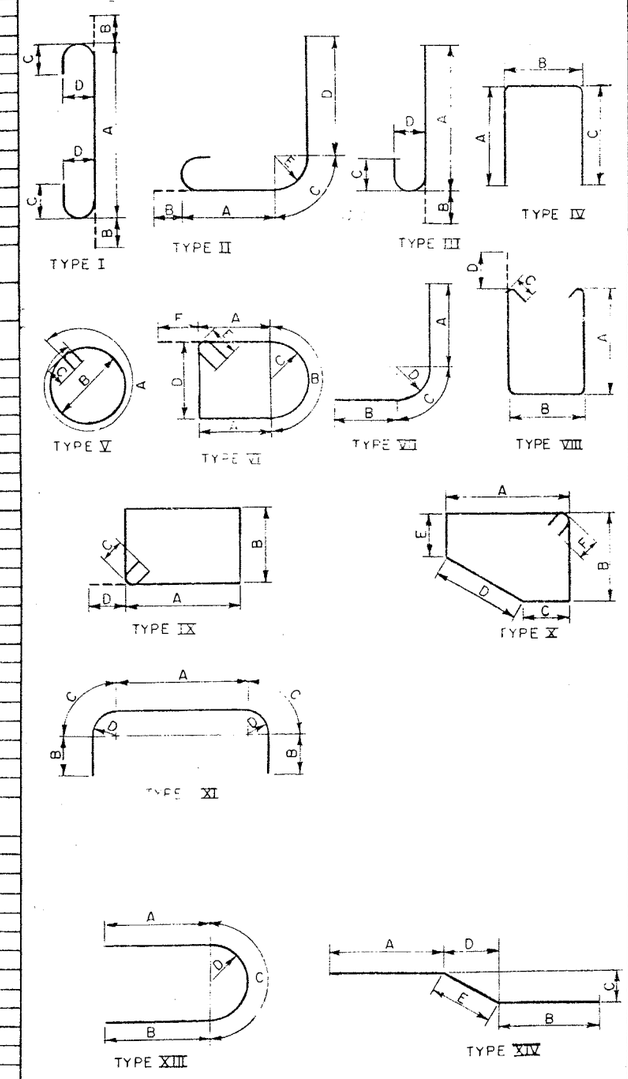

PLANS MADE
1 REVISION
2 REVISION
3 REVISION

PROJECT ENGINEER R. Fowler
IN CHARGE OF E. Eckel
DESIGNED BY
DESIGN CHECKED BY
DETAILED BY L. Everett & L. Hurt
DETAIL CHECKED BY JFD

BRIDGE NO. 2
INTERSTATE ROUTE 481 OVER DEWITT YARDS

BAR LIST # 5
DRAWING NO. 48 OF 50

FED. NO. REG. NO.	STATE	FEDERAL AID PROJECT NO.	SHEET NO.	TOTAL SHEETS
1	N.Y.	I-481-2(10)	227	309

INTERSTATE ROUTE CONNECTION 570
BUFFALO INTERCHANGE (PHASE 2)
ONONDAGA COUNTY

SOUTH ABUTMENT

MARK	SIZE	NO.	LENGTH	TYPE	A	B	C	D	E	F	G	H	I	LOCATION
AFL1	5	56	34'-4"	Str.										Longitudinal-Top & Bottom footing.
AFL2	5	28	23'-0"	Str.										Longitudinal-Top & Bottom footing.
AFL3	5	14	8'-6"	Str.										Longitudinal-Top & Bottom footing.
AFL4	5	14	9'-0"	Str.										Longitudinal-Top & Bottom footing.
AFT5	5	311	8'-6"	Str.										Transverse-Top & Bottom footing.
AFT6	7	76	8'-6"	Str.										Transverse - Bottom footing.
AWV7	5	17	3'-4"	Str.										Vertical - Wingwall.
AFV8	5	120	3'-0"	Str.										Dowels.
AWV9	7	36	12'-11"	Str.										Vertical - Wingwall.
AWV10	5	41	13'-0"	Str.										Vertical - Wingwall.
AWV11	7	36	13'-0"	Str.										Vertical - Wingwall.
ABV12	5	40	12'-0"	Str.										Backwall - Vertical.
ABV13	5	24	13'-7"	Str.										Backwall - Vertical.
ABV14	7	105	12'-0"	Str.										Backwall - Vertical.
AWH15	5	28	23'-0"	Str.										Wingwall - Horizontal.
AWH16	5	28	26'-0"	XVI	20'-0"	5'-9"	6"	6"	8½"					Wingwall - Horizontal.
AWH17	5	28	5'-8"	Str.										Curtainwall - Horizontal.
AWH18	5	20	8'-0"	Str.										Wingwall - Horizontal.
AWH19	5	10	7'-8"	Str.										Wingwall - Horizontal.
ABH20	5	56	40'-6"	Str.										Backwall - Horizontal.
ABH21	5	28	22'-3"	Str.										Backwall - Horizontal.
ABH22	5	28	22'-11"	Str.										Backwall - Horizontal.
AFV23	7	243	4'-2"	Str.										Dowels.
ABV24	5	68	4'-9"	IV	2'-3"	5½"	2'-3"							Vertical - Header.
AHL26	5	4	33'-6"	Str.										Longitudinal - Header.
AHL27	5	2	22'-3"	Str.										Longitudinal - Header (Mall).
AHL28	5	2	22'-11"	Str.										Longitudinal - Header "
ABV29	7	66	13'-7"	Str.										Backwall - Vertical.
ABV30	5	44	5'-5½"	IV	2'-3"	1'-2"	2'-3"							Header - Vertical (Mall).
AWV31	5	58	4'-6"	X	8"	3'-11"								Parapet - Vertical.
AWV32	5	58	3'-11"	Str.										Parapet - Vertical.
ACH33	5	6	23'-6"	Str.										Parapet - Horizontal (Exterior).
ACH34	5	6	25'-10"	XVI	5'-4"	19'-10"	6"	6"	8½"					Parapet - Horizontal (Exterior).
ACH35	5	6	5'-8"	Str.										Parapet - Horizontal (Exterior).
AWV36	5	18	8'-3½"	IV	3'-11"	8"	3'-11"							Curtainwall - Vertical.
ACH37	5	6	8'-4"	Str.										Parapet - Horizontal.
ACH38	5	6	8'-9"	XVI	3'-0"	5'-1"	6"	6"	8½"					Parapet - Horizontal.
ACH39	5	26	3'-8"	Str.										Parapet & Curtainwall.
APH40	5	21	10'-4"	XIII	3'-10"	3'-6"	3'-3"	0'-9"	3'-3"					Pedestal - Horizontal.
AFV41	5	24	3'-11"	Str.										Pedestal - Vertical.
APH42	5	3	10'-4"	IV	3'-10"	3'-6"	3'-3"							Horizontal - Pedestal.
FFV43	6	582	7'-3"	Str.										Pile reinforcement.

NORTH ABUTMENT

MARK	SIZE	NO.	LENGTH	TYPE	A	B	C	D	E	F	G	H	I	LOCATION
AFL1	5	40	33'-4"	Str.										Longitudinal (Top & Bottom) footing
AFL2	5	20	17'-6"	Str.										Longitudinal (T&B) outside wingwall
AFL3	5	20	8'-7"	Str.										Longitudinal (T&B) inside wingwall
AFT4	5	360	6'-0"	Str.										Transverse (T&B) footing
AFV5	5	316	2'-10"	Str.										Dowels
AFV6	5	24	4'-3"	Str.										Vertical pedestals
AWV7	5	12	Varies	Str.	Varies from 10'-9" to 11'-2" in equal incre									Vertical (Fr.) west exterior wingwall
AWV8	5	10	Varies	Str.	Varies from 9'-10" to 10'-1" in equal incre.									Vertical west interior wingwall
AWV9	5	10	Varies	Str.	Varies from 10'-10" to 11'-8" in equal incre									Vertical east interior wingwall
AWV10	5	12	Varies	Str.	Varies from 10'-2" to 10'-7" in equal incre.									Vertical east exterior wingwall
AWV11	5	16	8'-4"	IV	3'-11"	8"	3'-11"							Vertical curtainwall sidewalks
AWV12	6	50	4'-10"	IV	4'-3"	8"	0"							Vertical parapets
AWV13	6	50	4'-3"	Str.										Vertical parapets
ABV14	5	38	Varies	Str.	Varies from 8'-11" to 9'-8 in equal incre. 2 sets									Vertical backwalls
ABV15	5	24	Varies	Str.	Varies from 10'-6" to 11'-4" in equal incre.									Vertical mallwall
ABV16	5	48	6'-0"	IV	2'-6"	1'-2"	2'-6"							Vertical sidewalk on mallwall
AWH17	5	22	5'-8"	Str.										Horizontal curtainwalls
AWH18	5	22	19'-10"	XVI	14'-2"	5'-4"	6"	6"	8½"					Horizontal outside wingwall (Fr)
AWH19	5	16	16'-6"	Str.										Horizontal outside wingwall (rear)
AWH20	5	32	7'-7"	Str.										Horizontal inside wingwall (F&R)
ABH21	5	36	40'-1"	Str.										Horizontal backwall
ABH22	5	40	24'-0"	Str.										Horizontal mallwall (bottom)
APH24	5	6	10'-6"	IV	3'-3"	4'-2"	3'-3"							Horizontal facia pedestals
APH25	5	18	9'-8"	IV	3'-3"	3'-4"	3'-3"							Horizontal interior
ACH26	5	6	5'-8"	Str.										Horizontal curtainwall sidewalks
ACH27	5	6	19'-10"	XVI	14'-2"	5'-4"	6"							Horizontal outside wingwall sidewalks
ACH28	5	6	16'-6"	Str.										Horizontal outside wingwall sidewalks
ACH29	5	12	7'-6"	Str.										Horizontal inside wingwall sidewalks
ACH30	5	12	1'-8"	Str.										Horizontal inside wingwall sidewalks
ACH31	5	4	24'-0"	Str.										Horizontal mallwall sidewalks
FFV32	6	384	7'-3"	Str.										Vertical all piles
ABV33	5	90	Varies	Str.	Varies from 8'-9" to 9'-8" in equal incr. 2 sets									Vertical in backwall (Rear)
AWV34	5	22	Varies	Str.	Varies from 10'-5" to 10'-9" in equal incre.									Vertical in back of west ext. wingwall
ABV35	5	64	Varies	Str.	Varies from 10'-6" to 11'-4" in equal incre.									Vertical in back of mallwall
AWV36	5	2	11'-2"	Str.										Vertical in curtainwall (west)
ABH37	5	32	1'-8"	Str.										Horizontal in nterior curtainwalls
AWV38	5	2	10'-7"	Str.										Vertical in curtainwall (East)
AWV39	5	22	Varies	Str.	Varies from 9'-9" to 10'-3" in equal incre									Vertical in back of (East) ext wingwall
AWV40	5	4	11'-3"	Str.										Vertical in interior (East) curtain wall
AWV41	5	4	10'-6"	Str.										Verterical in interior (West) curtainwall

BAR TYPES

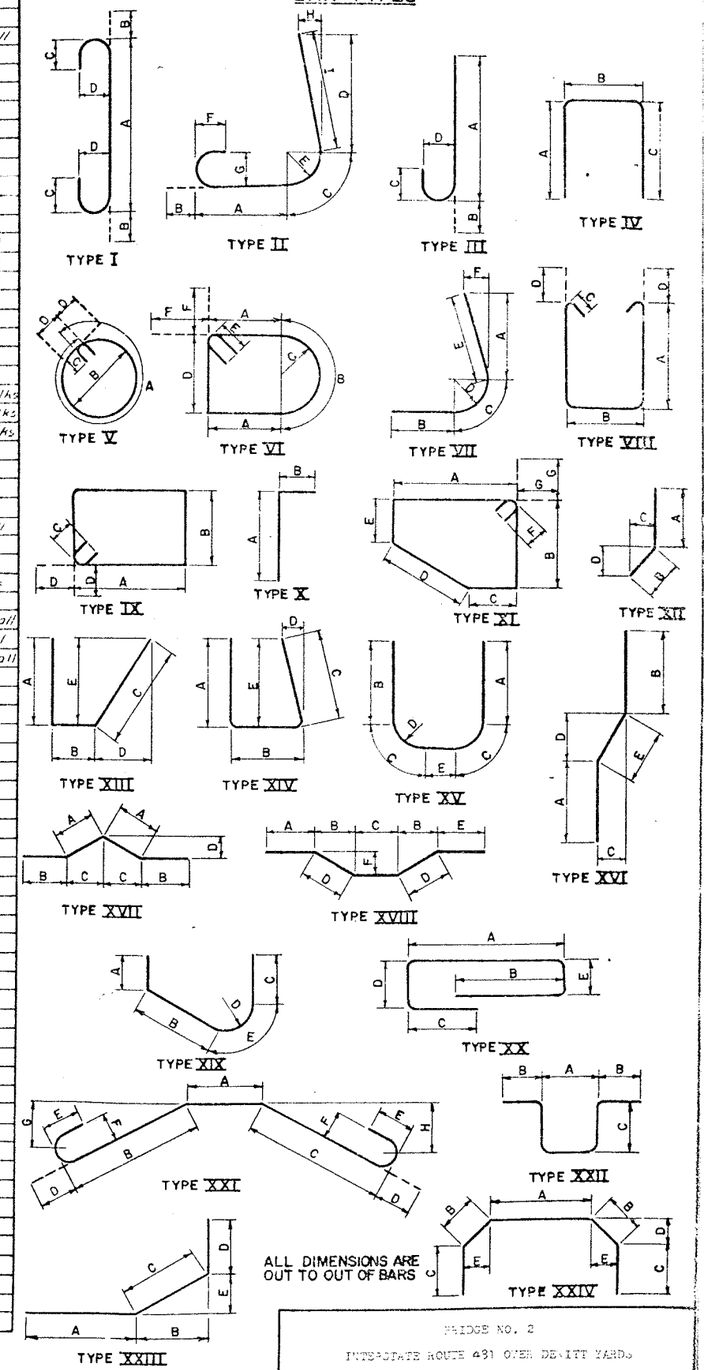

ALL DIMENSIONS ARE OUT TO OUT OF BARS

BRIDGE NO. 2
INTERSTATE ROUTE 481 OVER DEWITT YARDS

BAR LIST #6

PROJECT ENGINEER K. Marker
IN CHARGE OF F. Eckel
DESIGNED BY
DESIGN CHECKED BY
DETAILED BY A. K. Silbert
DETAIL CHECKED BY

BIN 1093572 P.U. 19

D251438

FED. ROAD REG. NO.	STATE	FEDERAL AID PROJECT NO.	SHEET NO.	TOTAL SHEETS
1	N.Y.	1R-481-(174) SH1-481-(124)	37	66

INTERSTATE ROUTE CONNECTION 570
BUTTERNUT INTERCHANGE - PHASE 2
BUTTERNUT INTERCHANGE TO COLLAMER,
SH 70-7 ONONDAGA COUNTY

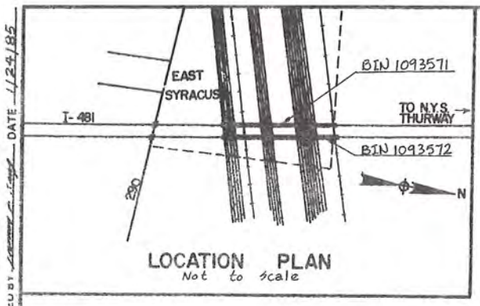

LOCATION PLAN
Not to scale

LOAD RATING	H.S. LOADING
INVENTORY	OPERATING
HS 21.7 (39T) L.F. *	HS 36.3 (65T) L.F. *

Northbound and Southbound Bridges
* L.F. = Load Factor

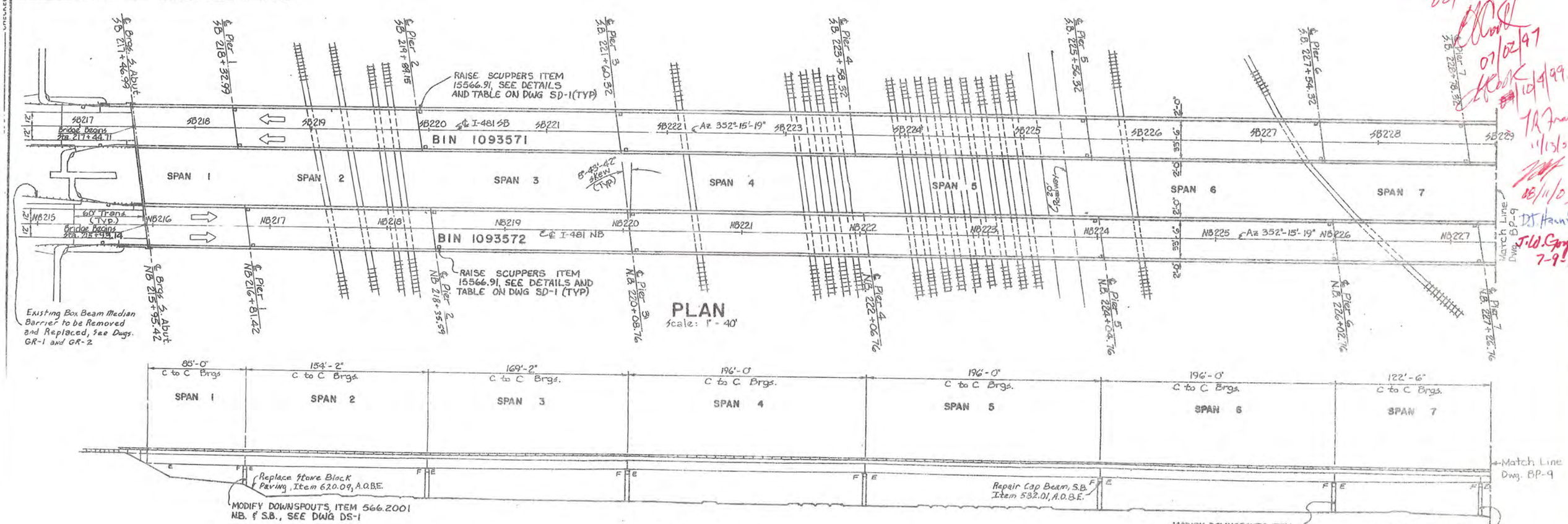

PLAN
Scale: 1" = 40'

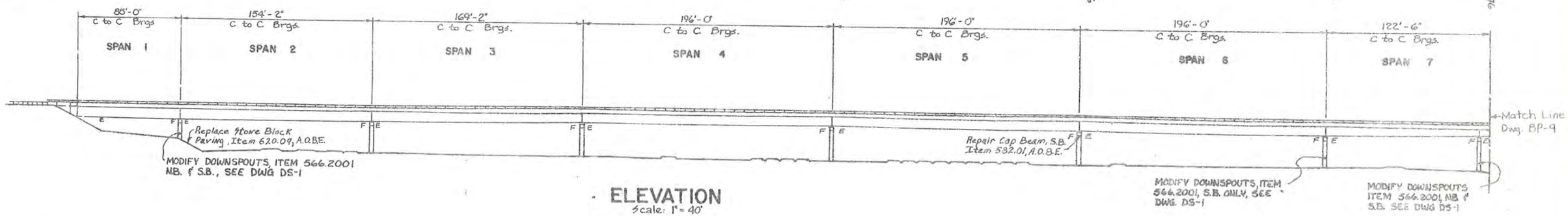

ELEVATION
Scale: 1" = 40'

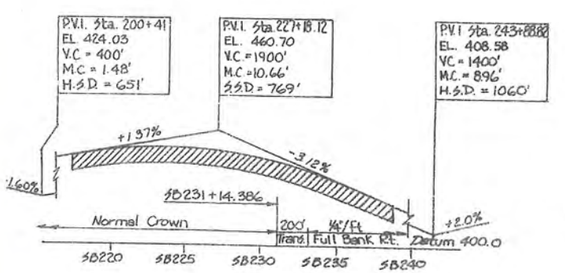

PROFILE SOUTHBOUND
Scale: Horiz. 1" = 500'
Vert. 1" = 40'

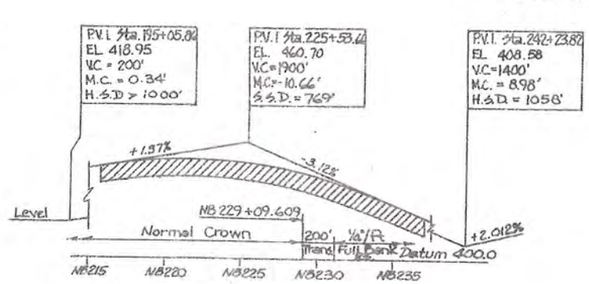

PROFILE NORTHBOUND
Scale: Horiz. 1" = 500'
Vert. 1" = 40'

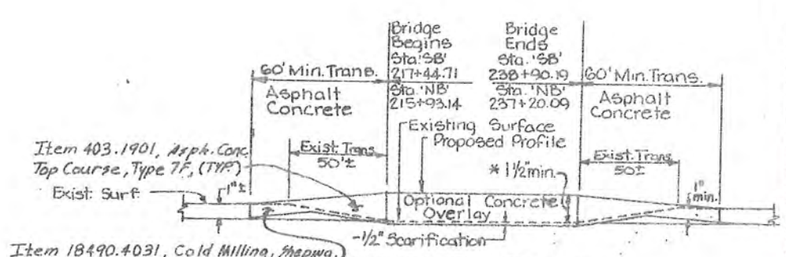

PROPOSED PROFILE
Not to Scale

AS - BUILT REVISIONS

SIGNATURE DATE

BIN 1093571 AND 1093572
SB AND NB OVER CONRAIL

STATE OF NEW YORK
DEPARTMENT OF TRANSPORTATION

DRAWING No.	SCALE	DATE		SHEET NO.

BIN 1093572

D251430

FED. ROAD REG. NO.	STATE	FEDERAL AID PROJECT NO.	SHEET NO.	TO SH
1	N.Y.	IR-481-(174) BH: 481-(174)	39	6
INTERSTATE ROUTE CONNECTION 570				
BUTTERNUT INTERCHANGE - PHASE 2				
BUTTERNUT INTERCHANGE TO COLLAMER,				
SH 70-7 ONONDAGA COUNTY				

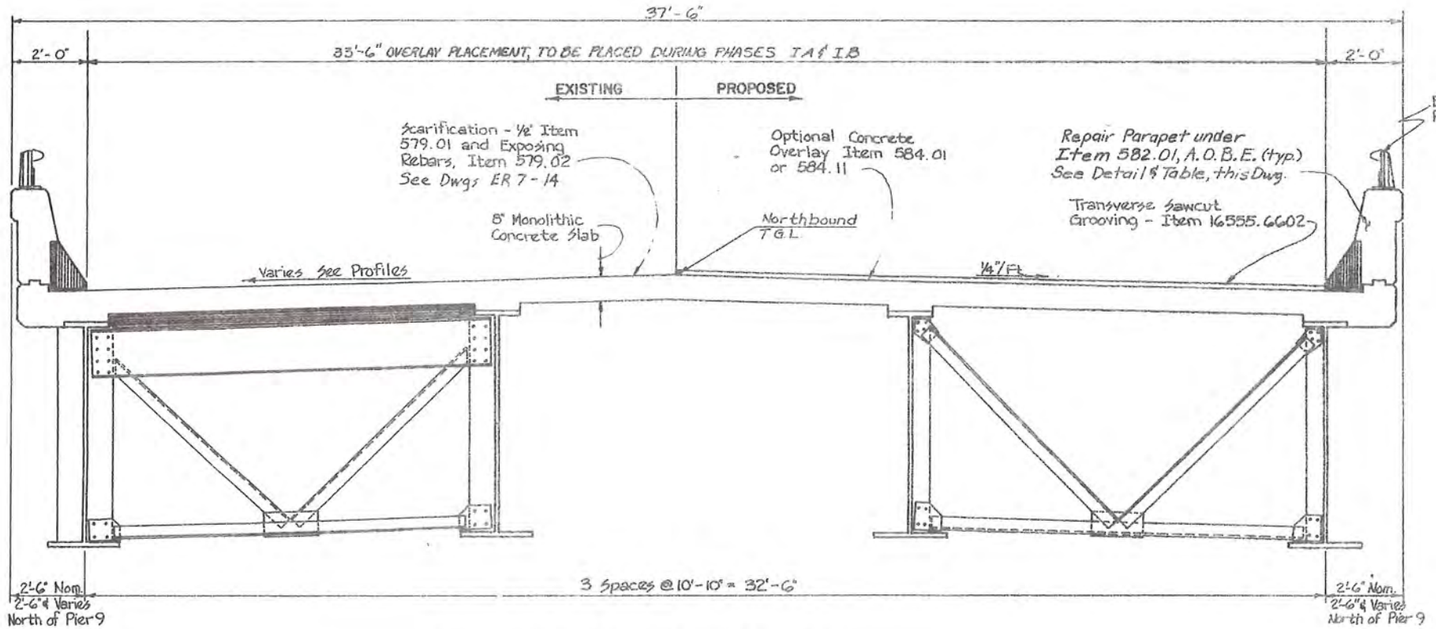

TYPICAL BRIDGE SECTION
(N.B. Bridge Looking North)
Scale: ½" = 1'-0"

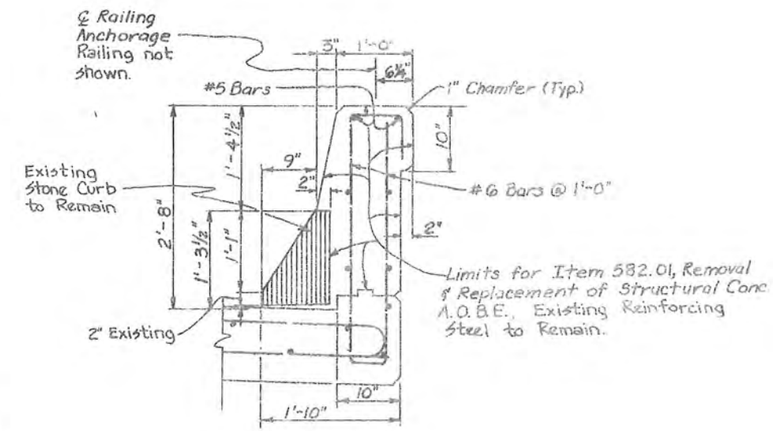

PARAPET REPAIR DETAIL
Scale: 1" = 1'-0"

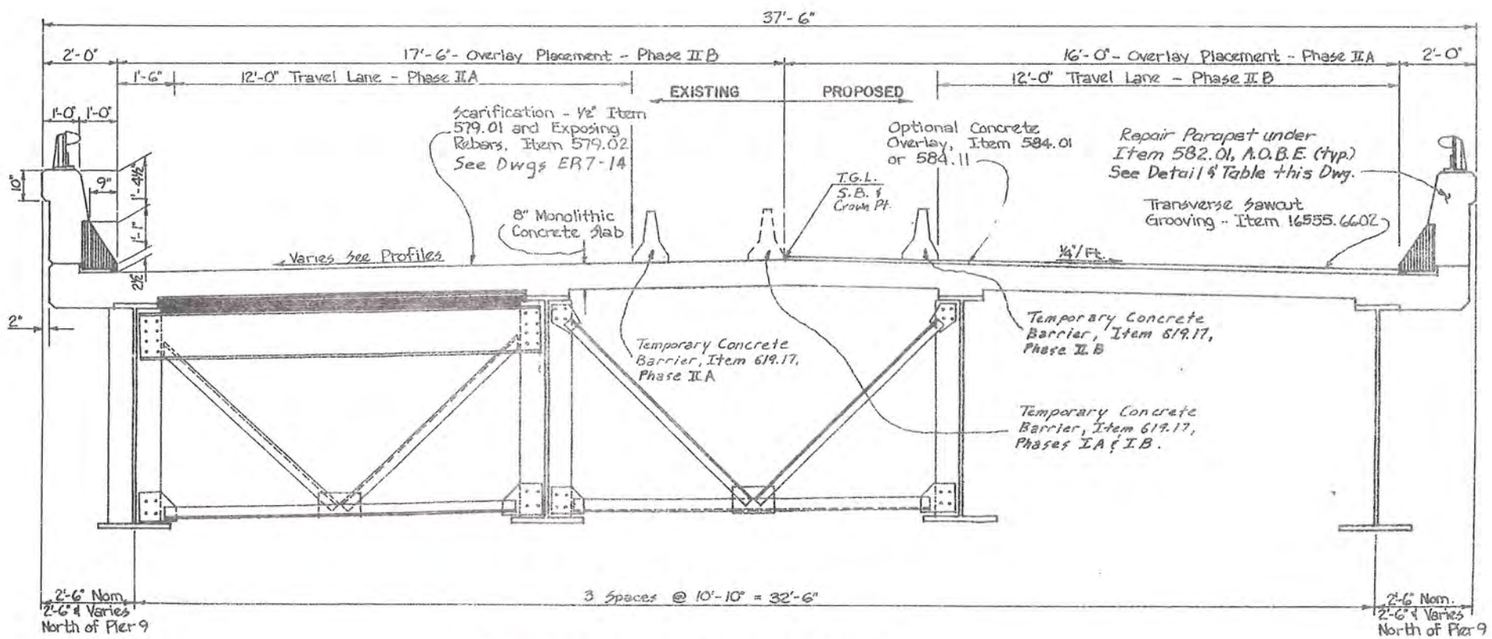

TYPICAL BRIDGE SECTION
(S.B. Bridge Looking North)
Scale: ½" = 1'-0"

REPAIR OF PARAPET WALL Item 582.01			
BIN 1093571		BIN 1093572	
SPAN #	EST. LENGTH	SPAN #	EST. LENGTH
4, Rt. Side	170 ft.	10, Rt. Side	55'
4, Lt. Side	70 ft.	15, Lt. Side	20'

AS - BUILT REVISIONS

SIGNATURE DATE

BIN 1093571 AND 1093572
SB AND NB OVER CONRAIL

STATE OF NEW YORK
DEPARTMENT OF TRANSPORTATION

DRAWING No.	SCALE	DATE	REGION	SHEET
BP10	As shown		3	39

DRAFTED BY ____ CHECKED BY ____ DESIGNED BY ____ CHECKED BY ____ ESTIMATED BY ____ DATE 11/24/85

IN CHARGE OF ____ HC 47-2 (5/76)

D251438

FED. ROAD REG. NO.	STATE	FEDERAL AID PROJECT NO.	SHEET NO	TOTAL SHEETS
1	N.Y.	IR-481-C(174) BHI-481-0174	62	66

INTERSTATE ROUTE CONNECTION 570
BUTTERNUT INTERCHANGE - PHASE 2
BUTTERNUT INTERCHANGE TO COLLAMER,
SH 70-7 ONONDAGA COUNTY

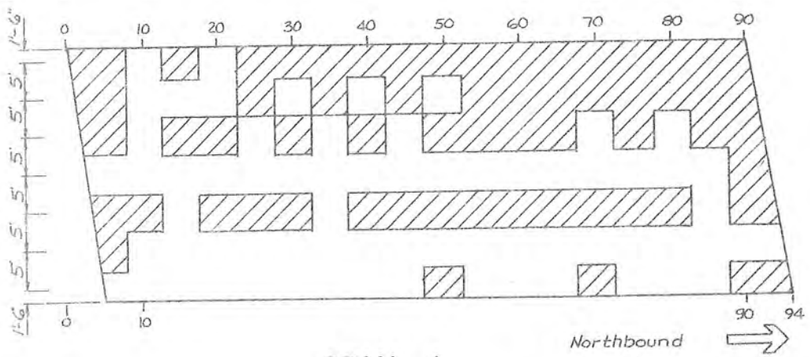

SPAN 1

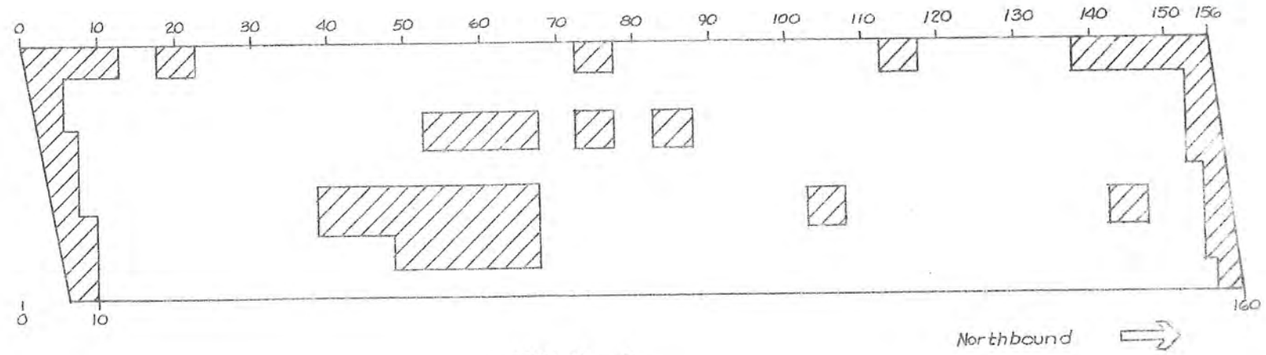

SPAN 2

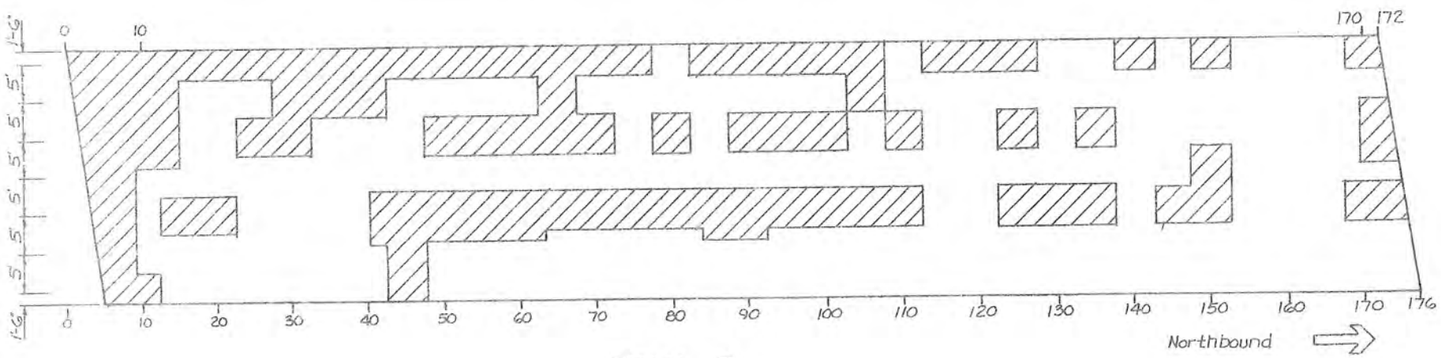

SPAN 3

Approximate Area for Exposing Reinforcing Bars, Item 579.02

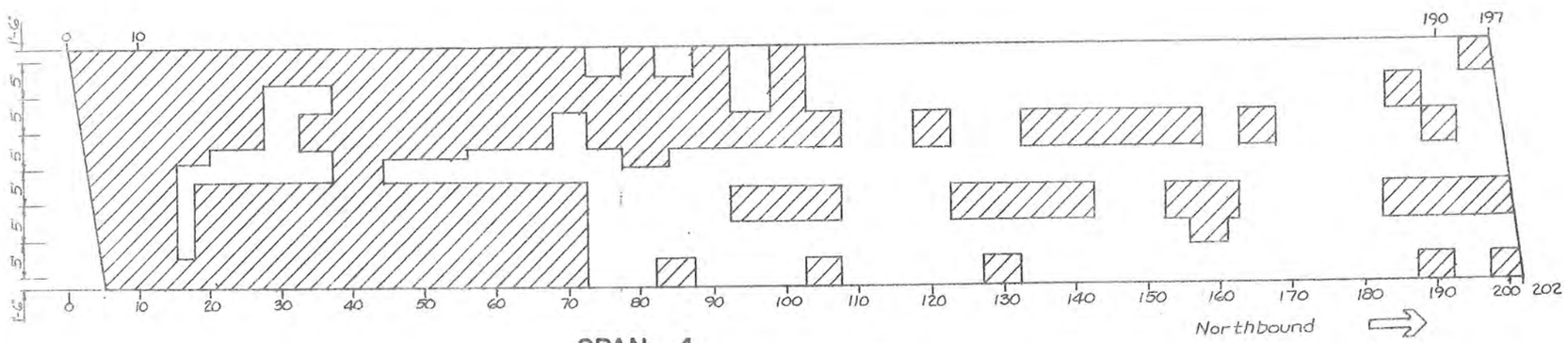

SPAN 4

AS - BUILT REVISIONS

SIGNATURE DATE

BIN 1093572 I-481 NORTHBOUND OVER CONRAIL

STATE OF NEW YORK
DEPARTMENT OF TRANSPORTATION

DRAWING No.	SCALE	DATE	REGION	SHEET NO.
ER-11			3	62

D251436

FED. ROAD REG. NO.	STATE	FEDERAL AID PROJECT NO.	SHEET NO.	TOTAL SHEETS
1	N.Y.	IR-481-(174) BHI 481 (17)	64	66

INTERSTATE ROUTE CONNECTION 570
BUTTERNUT INTERCHANGE - PHASE 2
BUTTERNUT INTERCHANGE TO COLLAMER,
SH 70-7 ONONDAGA COUNTY

Approximate Area for Exposing Reinforcing Bars, Item 579.02

AS - BUILT REVISIONS

SIGNATURE DATE

BIN 1093572 I-481 NORTHBOUND OVER CONRAIL

STATE OF NEW YORK
DEPARTMENT OF TRANSPORTATION

DRAWING No.	SCALE	DATE	REGION	SHEET NO.
ER-13			3	64

D251436

FED. ROAD REG. NO.	STATE	FEDERAL AID PROJECT NO.	SHEET NO.	TO SH
1	N.Y.	IR-481-(198) BHI-481-(176)	63	6

INTERSTATE ROUTE CONNECTION 570
BUTTERNUT INTERCHANGE - PHASE 2
BUTTERNUT INTERCHANGE TO COLLAMER,
SH 70-7 ONONDAGA COUNTY

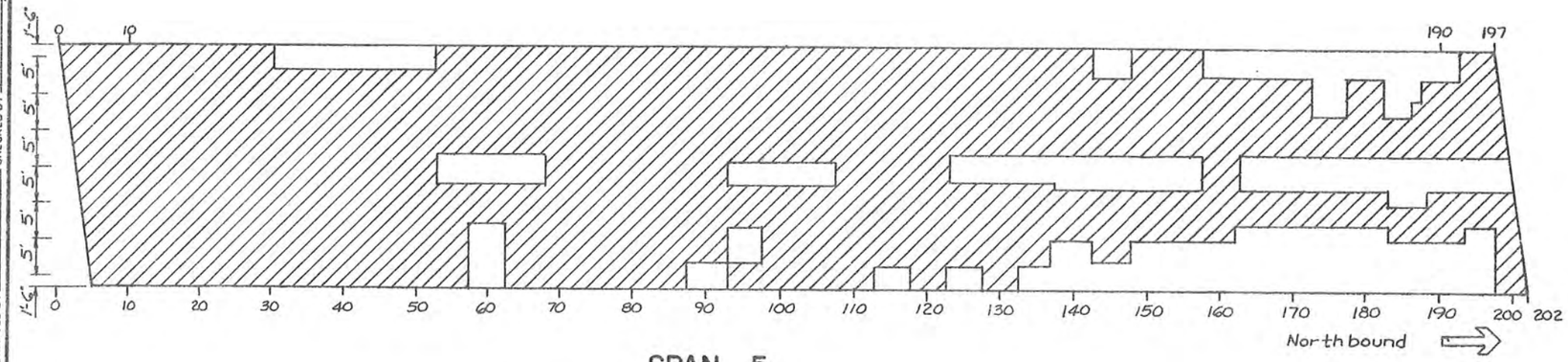

SPAN 5

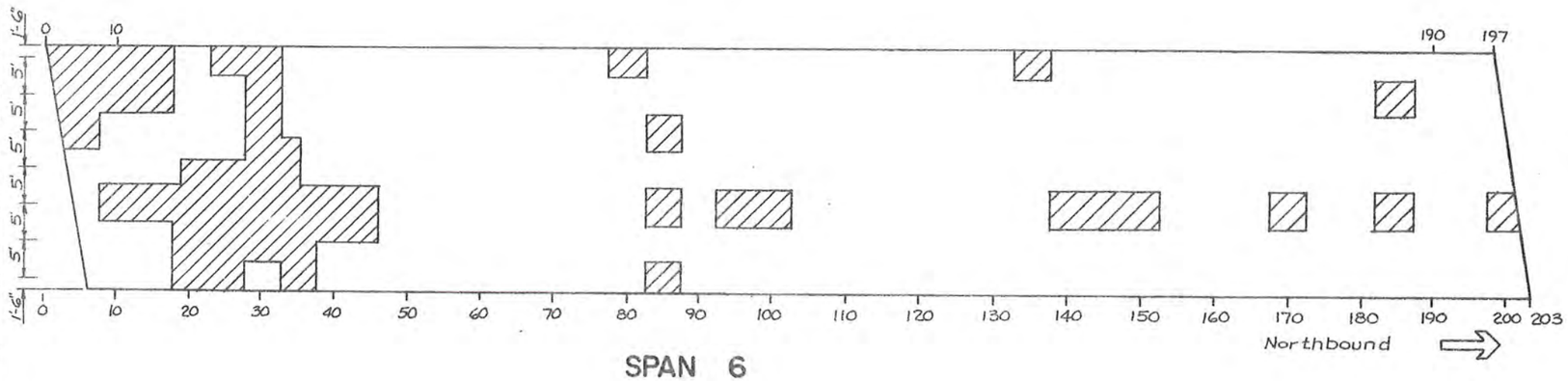

SPAN 6

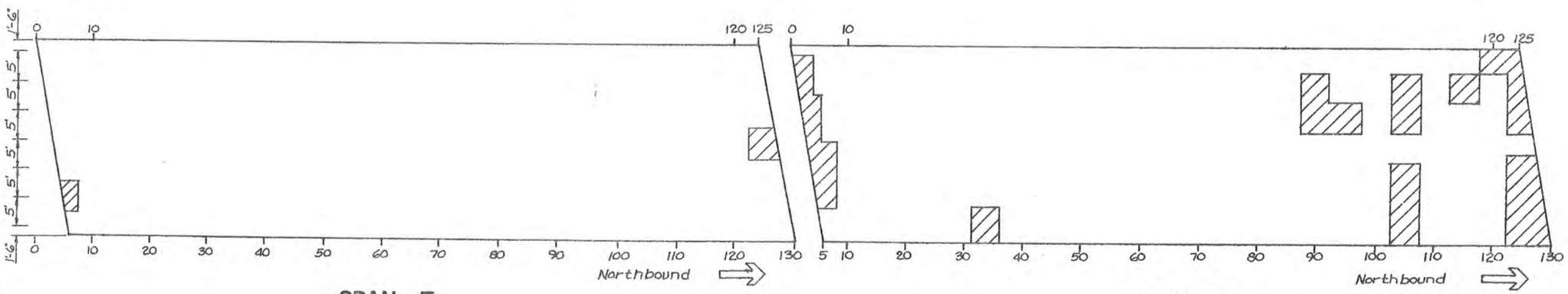

SPAN 7

SPAN 8

N

Approximate Area for Exposing Reinforcing Bars, Item 579.02

AS - BUILT REVISIONS

SIGNATURE DATE

BIN 1093572 I-481 NORTHBOUND OVER CONRAIL

STATE OF NEW YORK
DEPARTMENT OF TRANSPORTATION

DRAWING No.	SCALE	DATE	REGION	SHEET NO.
ER-12			3	63

DATE 1/24/85 CHECKED BY DRAFTED BY CHECKED BY ESTIMATED BY CHECKED BY DESIGNED BY IN CHARGE OF

D25143

FED. ROAD REG. NO.	STATE	FEDERAL AID PROJECT NO.	SHEET NO.
1	N.Y.	IR-481-(174) BH1 481-(174)	6

INTERSTATE ROUTE CONNECTION 57
BUTTERNUT INTERCHANGE - PHASE
BUTTERNUT INTERCHANGE TO COLLA
SH 70-7 ONONDAGA COUNTY

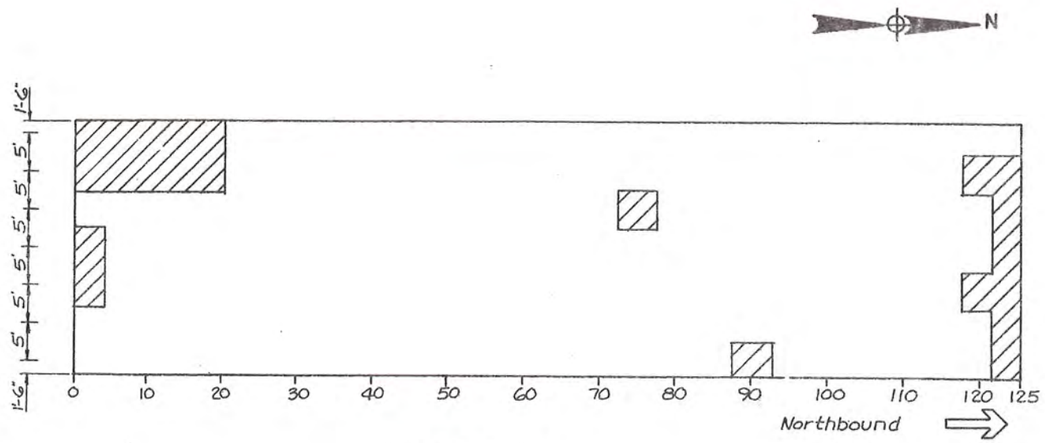

SPAN 15

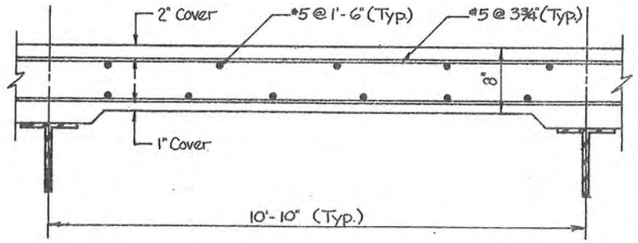

TOP BAR REINFORCEMENT
Not to scale

Approximate Area for Exposing Reinforcing Bars, Item 579.02

AS - BUILT REVISIONS

SIGNATURE DATE

BIN 1093572 I-481 NORTHBOU
OVER CONRAIL

STATE OF NEW YORK
DEPARTMENT OF TRANSPORTAT

DRAWING No.	SCALE	DATE	REGION
ER-14			3

DATE 1/24/85 CHECKED BY DRAFTED BY CHECKED BY ESTIMATED BY CHECKED BY DESIGNED BY IN CHARGE OF

HC 47-2 (5/76)

D251436

FED. ROAD REG. NO.	STATE	FEDERAL AID PROJECT NO.	SHEET NO.	TOTAL SHEETS
1	N.Y.	IR-481-(174) BHI-481-(174)	3	66

INTERSTATE ROUTE CONNECTION 570
BUTTERNUT INTERCHANGE - PHASE 2
BUTTERNUT INTERCHANGE TO COLLAMER,
SH 70-7 ONONDAGA COUNTY

GENERAL NOTES

Design Specifications New York State Department of Transportation Standard Specifications for Highway Bridges with all provisions in effect as of August 1985.

The Load Ratings are in accordance with the AASHTO "Manual for Maintenance Inspection of Bridges - 1978".

Material and Construction Specifications: Standard Specifications, Construction and Materials, New York State Department of Transportation, Office of Engineering, dated January 2, 1985 with current additions and modifications.

BRIDGE RECONSTRUCTION NOTES

The Contractor's attention is directed to the fact that, due to the nature of reconstruction projects, the exact extent of reconstruction work cannot always be accurately determined prior to the commencement of work. These Contract Documents have been prepared based on field inspection and other information available at the time. Actual field conditions may require modifications to construction details and work quantities. The Contractor shall perform the work in accordance with field conditions.

The Contractor shall perform all work with care so that any materials which are to remain the property of the State will not be damaged. If the Contractor damages any materials which are to remain in place, or which are to remain the property of the State, the damaged materials shall be repaired or replaced in a manner satisfactory to the Engineer at the expense of the Contractor.

Whenever items in the Contract require materials to be removed and disposed of, the cost of supplying a disposal area and transportation to that area shall be included in the unit price bid for those items.

During removal operations, the Contractor shall not be allowed to drop waste concrete, debris and other material to the area below the bridge except where the plans specifically permit the dropping of material. Platforms, nets, screens or other protective devices shall be used to catch the material. If the Engineer determines that adequate protective devices are not being employed, the work shall be suspended until adequate protection is provided.

All material falling on the area below and adjacent to the bridge shall be removed and disposed of by the Contractor.

The cost of furnishing, installing, maintaining, removing and disposing of all platforms, nets, screens or other protective devices shall be included in the unit bid price of the appropriate items of the Contract.

SPECIAL NOTES

1. The Contractor's attention is directed to the fact that these highways will be designated as Restricted Highways under this contract.
2. The Contractor's attention is directed to subsection 105-09, "Work Affecting Railroads."
3. For additional existing details of the bridges, see the Contract Record Plans FISH 70-7. These Plans are available in the Region 3 Office at 333 East Washington Street, Syracuse, New York.
4. The Contractor shall schedule his bridge rehabilitation work on this project such that no scarification be left incomplete nor reinforcing steel left exposed over the winter months (November 15 - April 1).
5. Special Notes for Optional Overlay Profiles, Scarification and Exposing Reinforcing Bars - See Dwgs.
6. The cost of all joint material will be included in the price bid for the various items of the contract, unless otherwise specified on the Plans.
7. All concrete surfaces receiving new concrete shall be sandblasted. Just prior to the application of new concrete, the surfaces shall be air cleaned, wet down and coated with a thin coating of 1:1 mortar or neat cement paste thoroughly brushed into the surface. It will not be necessary to brush the mortar into surfaces made inaccessible by mesh or closely spaced reinforcement when so determined by the Engineer. There will be no separate payment for this work. The cost shall be included in the bid price for the various concrete items in the Contract.

INDEX

DWG. NO.	SHEET NO.	DESCRIPTION
	1	Title Sheet
	2	Summary Quantities
	3	General Notes
GR-1-2	4-5	Guide Rail Sheets
MPT 1-23	6-28	Maintenance and Protection of Traffic
EQ-1	29	Quantity Estimate by Structure
BP-1	30	BIN 1093510
BP-2	31	BIN 1093520
BP-3	32	BIN 1093530
BP-4	33	BIN 1093540
BP-5	34	BIN 1093550
BP6-BP7	35-36	BIN 1093561 and 1093562
BP8-BP10	37-39	BIN 1093571 and 1093572
BP11-BP12	40-41	BIN 1093671 and 1093672
JD1-JD5	42-46	Joint Details
SD-1	47	Scupper Details
DS-1	48	Modifying Downspouts
RC-1	49	Railing Replacement Clamps
SN1-SN2	50-51	Special Notes
ER1-ER15	52-66	Exposing Rebar Details

	WORK TO BE DONE (NOT NECESSARILY IN SEQUENCE)										
	1093510	1093520	1093530	1093540	1093550	1093561	1093562	1093571	1093572	1093671	1093672
Scarify Structural Slab	•	•	•	•	•	•	•	•	•	•	•
Expose Reinforcing Bars	•	•	•	•	•	•	•	•	•	•	•
Transverse Saw Cut Grooving of Structural Slab Surface	•	•	•	•	•	•	•	•	•	•	•
Install Armoring Angle	•	•	•	•	•	•	•	•	•	•	•
Install Armored Joints with Compression Seals	•	•	•	•		•	•	•	•	•	•
Vertically adjust Open Armored Joint					•			•	•		
Vertically adjust Finger Joints								•	•		
Repair Parapet Wall								•	•		
Place Optional Concrete Overlay	•		•	•	•	•		•	•	•	•
CLEAN DOWNSPOUTS					•			•	•		
Replace Stone Block Paving								•	•		
Repair Abutment Backwalls	•	•	•	•	•	•	•			•	•
Replace Existing Railing Clamps	•	•	•	•	•	•	•			•	•
Alter Drop Inlets								•	•		
Vert. Adjust. Bridge Drain. Dev.								•	•		
Repair Cap Beams								•			
MODIFY DOWNSPOUTS								•	•		
Place Micro Silica Overlay		•					•				

AS - BUILT REVISIONS

SIGNATURE DATE

STATE OF NEW YORK
DEPARTMENT OF TRANSPORTATION

DRAWING No.	SCALE	DATE	REGION 3	SHEET No. 3

DRAFTED BY ____ CHECKED BY ____ DATE ____
DESIGNED BY Nick DeCarlo CHECKED BY Nick DeCarlo ESTIMATED BY Nick DeCarlo
IN CHARGE OF Nick DeCarlo
HC 87-2 (5/78)

3/3 1093572

New Joints; Repair Conc. Elements; Spot Deck Repairs; Bearing Restoration; Scupper work; Parapet Repairs.

2003

D259214

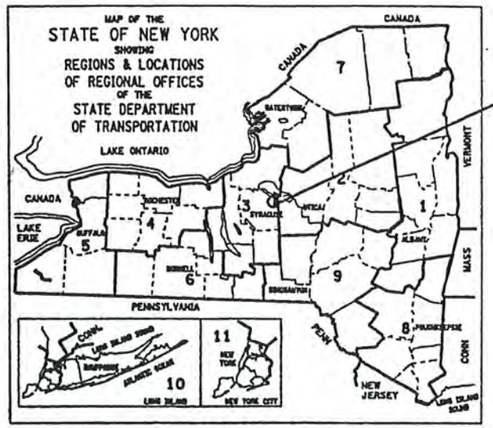

STATE OF NEW YORK
DEPARTMENT OF TRANSPORTATION
OFFICE OF ENGINEERING

BRIDGE REHABILITATION PROJECT (ELEMENT SPECIFIC)
VARIOUS BRIDGES ON INTERSTATE 481
TOWNS OF DEWITT AND CICERO

VOLUME 1 OF 2

THIS IS A BRIDGE REHABILITATION PROJECT ON VARIOUS BRIDGES ON INTERSTATE 481, LOCATED IN THE TOWNS OF CICERO AND DEWITT IN ONONDAGA COUNTY. THIS WORK CONSISTS OF BRIDGE JOINTS, BEARINGS, BRIDGE RAIL AND CONCRETE REPAIR OF SUBSTRUCTURES. THERE ARE 28 BRIDGES IN THE PROJECT BEGINNING AT REFERENCE MARKER 481I-3301-1000 SOUTH OF THE CITY OF SYRACUSE AND ENDING AT REFERENCE MARKER 481I-3301-2143. I481 INTERCHANGE NORTH OF THE CITY.

432 SHEETS ONONDAGA COUNTY CONTRACT D259214

F.A. PROJECT

STANDARD SHEETS

M203-4, M203-5, M203-6R1, M603-1
M606-32, M606-33, M606-34,
M619-3R1, M619-4, M619-5
M685-1, M685-2R1, M685-3R1
M685-4R1, M685-5R1, M403-1, M203-4,
M203-5, M203-6R1, M603-1

Bruce Gosselin 6/26/2009
D.J. Hann 7/5/11
J.W. Gonyprakis 7-9-13

ALL WORK CONTEMPLATED UNDER THIS CONTRACT IS TO BE COVERED BY AND IN CONFORMITY WITH THE STANDARD SPECIFICATIONS (METRIC UNITS) OF JANUARY 2, 2002, AS AMENDED BY ADDENDA NOS. 1 AND 2, EXCEPT AS MODIFIED ON THESE PLANS AND IN THE ITEMIZED PROPOSAL.

CONTRACTOR'S NAME _____
AWARD DATE _____
COMPLETION DATE _____
FINAL ACCEPTANCE DATE _____
REGIONAL DIRECTOR _____
ENGINEER IN CHARGE _____
FINAL COST TOTAL _____

FISCAL SHARE COST(S)

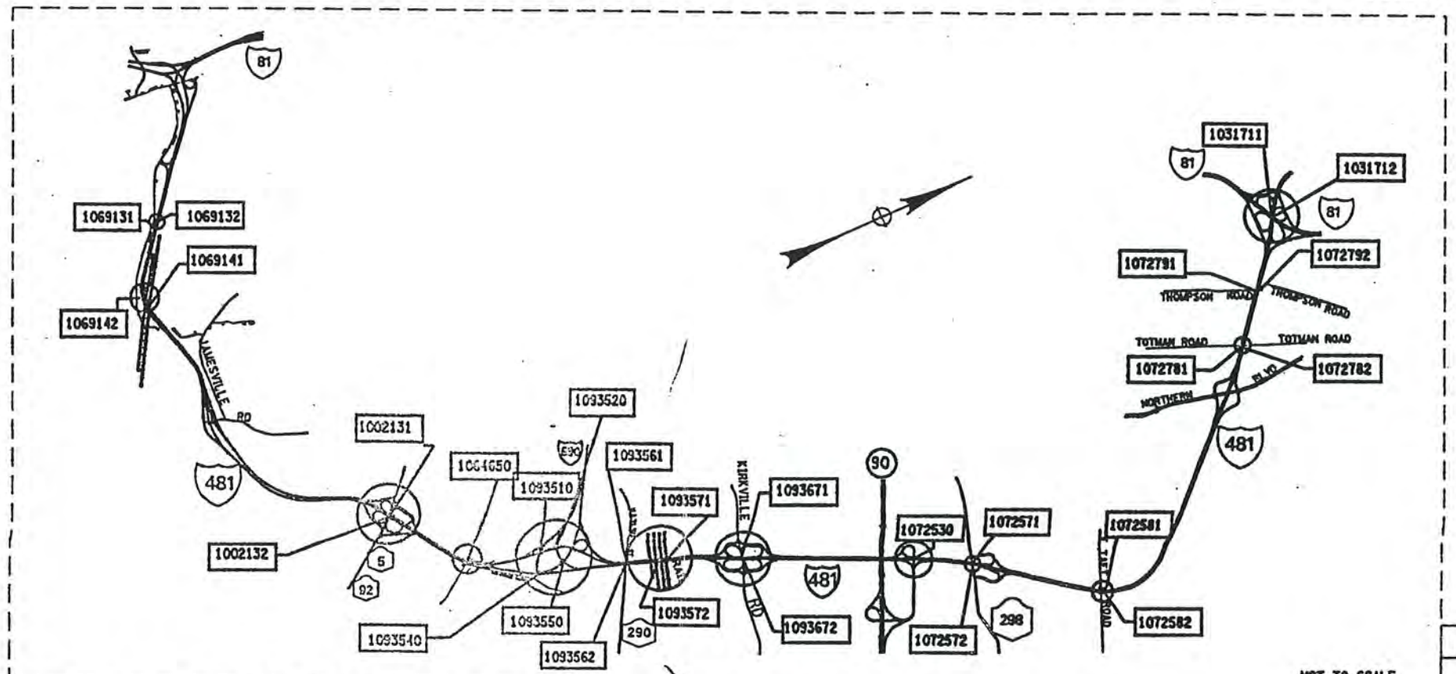

NOT TO SCALE

PROJECT LOCATION

BRIDGE REHAB. PROJ.- ELEMENT SPECIFIC			
VARIOUS BRIDGES ON INTERSTATE 481			
TOWNS OF DEWITT AND CICERO			
ONONDAGA COUNTY			
FED. ROAD REG. NO.	STATE	SHEET NO.	TOTAL SHEETS
1	N.Y.	1	432
FEDERAL AID PROJECT NO.			
CAPITAL PROJECT IDENTIFICATION NO. 3056.13			
INDEX ON SHEET NO. 5 & 6			

RECOMMENDED BY John E. Fritz 9/04/02
REGIONAL DESIGN ENGINEER DATE

RECOMMENDED BY Myron A. Dunlap 9/4/02
REGIONAL CONSTRUCTION ENGINEER DATE

RECOMMENDED BY 9/04/02
REGIONAL TRANSPORTATION MAINTENANCE ENGINEER DATE

RECOMMENDED BY 9-4-02
REGIONAL TRAFFIC ENGINEER DATE

APPROVED BY 09-04-02
REGIONAL DIRECTOR DATE

DESIGN SUPERVISOR Clement J. Nick JOB MANAGER Nick DeCirce DESIGNED BY Alan Hughes CHECKED BY Alan Hughes ESTIMATED BY Bruce Wagner DRAFTED BY Chris Spoor CHECKED BY Alan Hughes

FED ROAD REG. NO.	STATE	CONTRACT NO.	SHEET NO.	TOTAL SHEETS
1	N.Y.	D259214	5	432

BRIDGE REHABILITATION PROJECT (ELEMENT SPECIFIC)
VARIOUS BRIDGES ON INTERSTATE 481
TOWNS OF DEWITT AND CICERO
ONONDAGA COUNTY
P.I.N. 305613 B.I.N. ALL BINS

INDEX

SHEET NO.	DESCRIPTION	DRAWING NO.
1	TITLE SHEET	COVER
2,3,4	ESTIMATE OF QUANTITIES	
5,6	INDEX	IDX-1 - IDX-2
7-155	MAINTENANCE AND PROTECTION OF TRAFFIC	MPT-1 - MPT-149
156	CROSSOVER TYPICAL SECTION	CTS-1
157-160	CROSSOVER SURVEY CONTROL DATA	HC-1 - HC-4
161-166	CROSSOVER PLANS	CPL-1 - CPL-6
167-174	CROSSOVER PROFILES	CPR-1 - CPR-8
175-177	CROSSOVER MISC. DETAILS	CMD-1 - CMD-3
178-179	CROSSOVER MISC. TABLES	CMT-1 - CMT-2
180-191	ESTIMATE OF QUANTITIES BY STRUCTURE	QE-1A - QE-4C
192	GENERAL NOTES	GN-1
193	BIN 1002131, I481SB/RT. 5, PLAN AND ELEVATION	GP1-1
194	BIN 1002131, TYPICAL BRIDGE SECTION AND PROFILE	TS1-1
195-197	BIN 1002131, SOUTH ABUTMENT (SB)	AB1-1 - AB1-3
198-199	BIN 1002131, NORTH ABUTMENT (SB), SHEET PILING LAYOUT	AB1-4 - AB1-5
200-201	BIN 1002131 PIER 1 & PIER 2 SB REMOVAL DETAILS	PR1-1 & PR1-2
202	BIN 1002131, PEDESTAL REPLACEMENT	PR1-3
203	BIN 1002131, BOLSTER DETAILS	PR1-4
204	BIN 1002131, ANCHOR BOLT LAYOUT (SB)	PR1-5
205	BIN 1002132, I481NB/RT. 5, PLAN AND ELEVATION	GP2-1
206-207	BIN 1002132, TYPICAL BRIDGE SECTION AND PROFILE, APPROACH SECTION	TS2-1 & TS2-2
208-213	BIN 1002132, SOUTH ABUTMENT (NB)	AB2-1 - AB2-6
214-219	BIN 1002132, NORTH ABUTMENT (NB)	AB2-7 - AB2-12
220-221	BIN 1002132, PIERS (NB)	PR2-1 & PR2-2
222	BIN 1002132, PEDESTAL REPLACEMENT (NB)	PR2-3
223	BIN 1002132, BOLSTER DETAILS (NB)	PR2-4
224	BIN 1002132, ANCHOR BOLT LAYOUT (NB)	PR2-5
225	BIN 1031711 AND 1031712, I-481/I-81, PLAN AND ELEVATION	GP3-1
226	BIN 1031711 & 1031712, TYPICAL BRIDGE SECTION AND PROFILE	TS3-1
227	BIN 1031711, EAST ABUTMENT (SB) PLAN & ELEVATION	AB3-1
228	BIN 1031711, WEST ABUTMENT (SB) PLAN & ELEVATION	AB3-2
229	BIN 1031712, EAST ABUTMENT (NB) PLAN & ELEVATION	AB3-3
230	BIN 1031712, WEST ABUTMENT (NB) PLAN & ELEVATION	AB3-4
231	BIN 1031711 & 1031712, APPROACH SLABS	AS3-1
232	BIN 1064650, KINNE RD/I-481, PLAN, ELEVATION, AND BRIDGE SECTION	GP4-1
233	BIN 1069131 & 1069132, I-481/QUARRY DRIVEWAY, PLAN AND ELEVATION	GP5-1
234	BIN 1069131 & 1069132, TYPICAL BRIDGE SECTION AND PROFILE AND BRIDGE SECTION	TS5-1
235	BIN 1069131, WEST ABUTMENT (SB) PLAN & ELEVATION	AB5-1
236	BIN 1069131, EAST ABUTMENT (SB) PLAN & ELEVATION	AB5-2
237	BIN 1069132, EAST ABUTMENT (NB) PLAN & ELEVATION	AB5-3
238-239	BIN 1069141 & 1069142, I-481/NYS + W RAILROAD, GENERAL PLAN AND ELEVATION	GP6-1 - GP6-2
240-241	BIN 1069141 & 1069142, TYPICAL BRIDGE SECTION AND PROFILES	TS6-1 & TS6-2
242	BIN 1069141, WEST ABUTMENT (SB) PLAN & ELEVATION	AB6-1
243	BIN 1069141, EAST ABUTMENT (SB) PLAN & ELEVATION	AB6-2
244	BIN 1069142, WEST ABUTMENT (NB) PLAN & ELEVATION	AB6-3
245	BIN 1069142, EAST ABUTMENT (NB) PLAN & ELEVATION	AB6-4

INDEX (CONTINUED)

SHEET NO.	DESCRIPTION	DRAWING NO.
246	BIN 1072530, RAMP TO I-481/I-481, PLAN, ELEVATION AND BRIDGE SECTION	GP7-1
247-248	BIN 1072530, EAST ABUTMENT	AB7-1 - AB7-2
249	BIN 1072571 & BIN 1072572, I-481/ROUTE 298 PLAN AND ELEVATION AND BRIDGE SECTION	GP8-1
250	BIN 1072571 & BIN 1072572, TYPICAL BRIDGE SECTION AND PROFILE	TS8-1
251	BIN 1072571, SOUTH ABUTMENT (SB) PLAN & ELEVATION	AB8-1
252	BIN 1072571, NORTH ABUTMENT (SB) PLAN & ELEVATION	AB8-2
253	BIN 1072572, SOUTH ABUTMENT (NB) PLAN & ELEVATION	AB8-3
254	BIN 1072581 & BIN 1072582, I-481/TAFT ROAD, PLAN AND ELEVATION	GP9-1
255	BIN 1072581 & 1072582, TYPICAL BRIDGE SECTION AND PROFILE	TS9-1
256-257	BIN 1072581, SOUTH ABUTMENT AND NORTH ABUTMENT (SB)	AB9-1 & AB9-2
258-259	BIN 1072582, SOUTH ABUTMENT AND NORTH ABUTMENT (NB)	AB9-3 & AB9-4
260	BIN 1072781 & BIN 1072782, I-481/TOTMAN ROAD, PLAN, ELEVATION AND BRIDGE SECTION	GP10-1
261	BIN 1072781 & BIN 1072782 TYPICAL BRIDGE SECTION AND PROFILE	TS10-1
262-263	BIN 1072781, EAST ABUTMENT (SB) PLAN & ELEVATION	AB10-1 & AB10-2
264	BIN 1072782, WEST ABUTMENT (NB) PLAN & ELEVATION	AB10-3
265	BIN 1072781, APPROACH SLABS	AS10-1
266	BIN 1072791 & BIN 1072792, I-481/ THOMPSON ROAD, PLAN, ELEVATION AND BRIDGE SECTION	GP11-1
267	BIN 1072791 & BIN 1072792 TYPICAL BRIDGE SECTIONS AND PROFILE	TS11-1
268	BIN 1072791, EAST & WEST ABUTMENTS (SB)	AB11-1
269	BIN 1072791, APPROACH SLAB (SB)	AS11-1
270	BIN 1093510, I-690 RAMP/ I-481SB, PLAN, ELEVATION, AND BRIDGE SECTION	GP12-1
271	BIN 1093510, WEST ABUTMENT PLAN & ELEVATION	AB12-1
272	BIN 1093520, WN LINE OVER INTERSTATE 481 SB, PLAN, ELEVATION, AND BRIDGE SECTION	GP13-1
273	BIN 1093520, WEST ABUTMENT PLAN & ELEVATION	AB13-1
274	BIN 1093540, I-690 EB/ I-481 NB RAMP, PLAN, ELEVATION, AND BRIDGE SECTION	GP14-1
275	BIN 1093540 TYPICAL BRIDGE SECTION AND PROFILE	TS14-1
276	BIN 1093540, WEST ABUTMENT	AB14-1
277	BIN 1093550, I-481 NB/WB CONNECTOR, PLAN, ELEVATION, AND BRIDGE SECTION	GP15-1
278	BIN 1093550, SOUTH ABUTMENT, NB PLAN & ELEVATION	AB15-1
279	BIN 1093550, NORTH ABUTMENT, NB PLAN & ELEVATION	AB15-2
280	BIN 1093561 & 1093562, I-481/ROUTE 290, PLAN, ELEVATION AND BRIDGE SECTION	GP16-1
281	BIN 1093561 & 1093562 TYPICAL BRIDGE SECTION AND PROFILE	TS16-1
282	BIN 1093561, SOUTH ABUTMENT (SB) PLAN & ELEVATION	AB16-1
283	BIN 1093562, SOUTH ABUTMENT (NB) PLAN & ELEVATION	AB16-2
284-287	BIN 1093571 & BIN 1093572, I-481/CSX RAILROAD YARD, PLAN & ELEVATION	GP17-1 - GP17-4
288	BIN 1093571 AND BIN 1093572, TYPICAL BRIDGE SECTION AND PROFILES	TS17-1
289-293	BIN 1093571 AND BIN 1093672, DRAINAGE DETAILS	DD17-1 - DD17-5
294-296	BIN 1093571 AND BIN 1093672, SCUPPER EXTENSIONS	DD17-6 - DD17-8
297-314	BIN 1093571, PIERS 1-14, (SB)	PR17-1S - PR17-18S
315	BIN 1093572, SOUTH ABUTMENT (NB)	AB17-1
316-329	BIN 1093572, PIERS 1-14 (NB)	PR17-1N - PR17-14N
330-331	BIN 1093571 AND 1093572, PARAPET REPAIR DETAILS	PW17-1 & PW17-2
332	BIN 1093572, BRIDGE DECK REPAIRS	DR17-1

ALL DIMENSIONS ARE IN m UNLESS OTHERWISE NOTED

AS BUILT REVISIONS

SIGNATURE DATE

INTERSTATE 481
REHABILITATION PROJECT

INDEX

STATE OF NEW YORK
DEPARTMENT OF TRANSPORTATION

FILENAME	REGION	DATE	DRAWING NO.
305613AAJL2A	3	10/02	IDX-1

CHECKED BY
DRAFTED BY
ESTIMATED BY
CHECKED BY
DESIGNED BY

FED ROAD REG. NO.	STATE	CONTRACT NO.	SHEET NO.	TOTAL SHEETS
1	N.Y.	D259214	6	432

BRIDGE REHABILITATION PROJECT (ELEMENT SPECIFIC)
VARIOUS BRIDGE ON INTERSTATE 481
TOWN OF DEWITT AND CICERO
ONONDAGA COUNTY
P.I.N. 305613 B.I.N. VARIOUS

INDEX (CONTINUED)

SHEET NO.	DESCRIPTION	DRAWING NO.
333	BIN 1093671 & 1093672, I-481/KIRKVILLE ROAD, PLAN, ELEVATION AND BRIDGE SECTION	GP18-1
334	BIN 1093671 & BIN 1093672 TYPICAL BRIDGE SECTION AND PROFILE	TS18-1
335-336	BIN 1093671, SOUTH ABUTMENT (SB) PLAN, ELEVATION AND SECTIONS	AB18-1 - AB18-2
337	BIN 1093671, NORTH ABUTMENT (SB) PLAN & ELEVATION	AB18-3
338-339	BIN 1093672, SOUTH ABUTMENT (NB) PLAN, ELEVATION AND SECTIONS	AB18-4 - AB18-5
340	BIN 1093672, NORTH ABUTMENT (NB) PLAN & ELEVATION	AB18-6
341-342	BIN 1002131, BIN 1002132 & BIN 1093571, MULTIROTATIONAL BEARINGS	BR-1 & BR-2
343	BIN 1002131, BEARING RESTORATION DETAILS	BR-3
344	BINS 1069131 & 1069132, BEARING RESTORATION DETAILS	BR-4
345-346	BIN 1069141 & BIN 1069142, BEARING RESTORATION DETAIL	BR-5 & BR-6
347	BIN 1072530, BEARING RESTORATION DETAILS	BR-7
348	BIN 1072791 AND BIN 1072792 BEARING RESTORATION DETAILS	BR-8
349	BIN 1093550, BEARING RESTORATION DETAILS	BR-9
350-351	BINS 1093751 & 1093572, BEARING RESTORATION DETAILS	BR-10 & BR-11
352	BIN 1072781 BEARING RESTORATION DETAILS	BR-12
	RAILING DETAILS	
353-355	BIN 1002131 & BIN 1002132, RAILING DETAILS	RD-1 - RD-3
356-358	BIN 1069141 & BIN 1069142, RAILING DETAILS	RD-4 - RD-6
359-360	RAILING DETAILS	RD-7 - RD-8
	BRIDGE JOINTS	
361-364	BRIDGE JOINT TABLE	JT-1 - JT-4
365	COMPRESSION SEAL JOINT DETAIL (ALL BRIDGES)	JD-1
366-370	BIN 1002131, JOINT DETAILS	JD-2 - JD-6
371-375	BIN 1002132, JOINT DETAILS	JD-7 - JD-11
376-377	BIN 1031711 & BIN 1031712, JOINT DETAILS	JD-12 - JD-13
378-383	BIN 1064650, JOINT DETAILS	JD-14 - JD-19
384-385	BIN 1069131, JOINT DETAILS	JD-20 + JD-21
386-387	BIN 1069132, JOINT DETAILS	JD-22 + JD-23
388-392	BIN 1069141 & BIN 1069142	JD-24 - JD-28
393-394	BIN 1072530, JOINT DETAILS	JD-29 + JD-30
395-396	BIN 1072571, JOINT DETAILS	JD-31 + JD-32
397-398	BIN 1072572, JOINT DETAILS	JD-33 + JD-34
399-400	BIN 1072581, JOINT DETAILS	JD-35 + JD-36
401-402	BIN 1072582, JOINT DETAILS	JD-37 + JD-38
403-404	BIN 1072781, JOINT DETAILS	JD-39 + JD-40
405-406	BIN 1072782, JOINT DETAILS	JD-41 + JD-42
407-408	BIN 1072792, JOINT DETAILS	JD-43 + JD-44
409-410	BIN 1093510, JOINT DETAILS	JD-45 + JD-46
411	BIN 1072791, BIN 1093520 & BIN 1093540, JOINT DETAILS	JD-47
412-413	BIN 1093550, JOINT DETAILS	JD-48 + JD-49
414-416	BIN 1093561 & BIN 1093562, JOINT DETAILS	JD-50 - JD-52
417-420	BIN 1093571 & BIN 1093572, JOINT DETAILS	JD-53 - JD-56
421-423	BIN 1093671 & BIN 1093672, JOINT DETAILS	JF-57 - JD-59

INDEX (CONTINUED)

SHEET NO.	DESCRIPTION	DRAWING NO.
424	VARIOUS BRIDGES - ROAD PLATE DETAIL	AA - RP1
	BAR LIST	
425-428	ALL BINS (BRIDGE JOINT SYSTEMS)	BL-1 - BL-4
429	BIN 1002131 & 1002132	BL-5
430	BIN 1093571	BL-6
431	STRUCTURAL SLAB OVERLAY & ASPHALT PAVEMENT REPAIR DETAILS	MS-1
432	MISC. TABLE	MT-1

ALL DIMENSIONS ARE IN m UNLESS OTHERWISE NOTED

AS BUILT REVISIONS

SIGNATURE DATE

INTERSTATE 481
REHABILITATION PROJECT

INDEX

STATE OF NEW YORK
DEPARTMENT OF TRANSPORTATION

FILENAME	REGION	DATE	DRAWING NO.
305613AAL2A	3	10/02	IDX-2

CHECKED BY
DRAFTED BY
ESTIMATED BY
DESIGNED BY

FED ROAD REG. NO.	STATE	CONTRACT NO.	SHEET NO.	TOTAL SHEETS
1	N.Y.	D259214	189	432

BRIDGE REHABILITATION PROJECT (ELEMENT SPECIFIC)
VARIOUS BRIDGES ON INTERSTATE 481
TOWNS OF DEWITT AND CICERO
ONONDAGA COUNTY
P.I.N. 305613 B.I.N. VARIOUS

ESTIMATE OF QUANTITIES BY STRUCTURE

ITEM #	DESCRIPTION	UNIT	1093550		1093561		1093562		1093571		1093572		1093671		1093672	
			EST.	FINAL	EST.	FINAL	EST.	FINAL	EST.	FINAL	EST.	FINAL	EST.	FINAL	EST.	FINAL
203.02 M	UNCLASSIFIED EXCAVATION & DISPOSAL	CM	—		—		—		—		—		—		—	
203.03 M	EMBANKMENT IN PLACE	CM	—		—		—		—		7		—		—	
203.07 M	SELECT GRANULAR FILL	CM	—		—		—		4		10		—		—	
203.1770 M	CLEAN EXISTING PIPE CULVERT	M	—		—		—		4		4		—		—	
203.18 M	CLEANING CLOSED DRAINAGE SYSTEMS	M	34		—		—		256		269		—		—	
203.19 M	CLEAN DRAINAGE STRUCTURES AND MANHOLES	EA	—		—		—		4		6		—		—	
203.21 M	SELECT STRUCTURE FILL	CM	—		—		—		—		—		—		—	
15203.51 M	GRADING, CLEANING AND RESHAPING EXISTING DITCHES	M	—		—		—		70		77		—		—	
206.01 M	STRUCTURE EXCAVATION	CM	—		—		—		—		—		—		—	
206.02 M	TRENCH AND CULVERT EXCAVATION	CM	—		—		—		24		22		—		—	
207.10 M	GEOTEXTILE BEDDING	SM	—		—		—		32		32		—		—	
210.5433 M	REMOVAL AND DISPOSAL OF ASBESTOS CONTAINING CAULKING (BV 12)	LS	—		—		—		NEC		NEC		—		—	
210.9913 M	REMOVAL AND DISPOSAL OF MISC. ASBESTOS CONTAINING MATERIAL BV-12	LS	NEC		—		—		—		—		—		—	
304.15 M	SUBBASE COURSE, OPTIONAL TYPE	CM	—		—		—		—		2		—		—	
402.128201 M	12.5mm F2 SUPERPAVE HMA, 80 SERIES COMPACTION	MT	6		4		5		3		3		5		5	
402.128211 M	PLANT PRODUCTION QUALITY ADJUSTMENT TO ITEM 402.128201M	QU	1		1		1		1		1		1		1	
402.258901 M	25mm F9 SUPERPAVE HMA, 80 SERIES COMPACTION	MT	10		6		8		5		5		8		8	
402.258911 M	PLANT PRODUCTION QUALITY ADJUSTMENT TO 402.258901M	QU	1		1		1		1		1		1		1	
402.378901 M	37.5mm, F9 SUPERPAVE HMA, 80 SERIES COMPACTION	MT	—		—		—		—		—		—		—	
402.378911 M	PLANT PRODUCTION QUALITY ADJUSTMENT TO 402.378901M	QU	—		—		—		—		—		—		—	
407.01 M	TACK COAT	L	22		13		17		12		12		17		17	
490.30 M	MISC. COLD MILLING OF BITUMINUS CONCRETE	SM	61		37		48		31		31		48		48	
502.92 M	SEALING TRANSVERSE JOINTS	M	—		—		—		—		—		—		—	
08520.5014 M	SAWCUT, ASPH, CONC/ASPH, OVERLAY- PCC PAVE	M	41		25		32		21		21		32		32	
552.13 M	TEMPORARY STEEL SHEETING	SM	—		—		—		—		—		—		—	
555.0105 M	CONCRETE FOR STRUCTURES - CLASS A	CM	—		—		—		1		2		—		—	
555.09 M	CONCRETE FOR STRUCTURES, CLASS HP	CM	2		2		2		88		15		2		2	
18555.81 M	STRUCTURAL CRACK SEALING	LM	—		—		—		—		—		—		—	
556.0201 M	UNCOATED BAR REINFORCEMENT FOR CONCRETE STRUCTURES	KG	—		—		—		1975		—		—		—	
556.0202 M	EPOXY COATED REBAR FOR STRUCTURES	KG	137		109		140		2732		613		145		145	
558.01 M	TRANSVERSE SAWCUT GROOVING OF STR SLAB SURF	SM	—		—		12		—		77		—		—	
18559.1696 M	PROTECTIVE SEALER STRUCTURAL CONCRETE	SM	—		—		—		1027		1031		—		—	
18559.1896 M	PROT SEAL STR. CONC. - NEW BRIDGE DECK OVERLAYS	SM	—		—		12		—		77		—		—	
564.0501 M	STRUCTURAL STEEL	LS	—		—		—		—		—		—		—	
565.1522 M	TYPE M.R. EXPANSION BEARING (1001 TO 2000 KN)	EA	—		—		—		8		—		—		—	
565.1722 M	TYPE M.R. FIXED BEARING (1001 TO 2000 KN)	EA	—		—		—		8		—		—		—	
15565.4302 M	BRIDGE BEARING RESTORATION	EA	12		—		—		32		36		—		—	
566.01 M	MODULAR EXPANSION JOINT SYSTEM, ONE-CELL	M	—		—		—		104		115		—		—	
566.02 M	MODULAR EXPANSION JOINT SYSTEM TWO-CELL	M	—		—		—		—		—		—		—	
567.31 M	ARM JNT SYS WI COMPRESSION SEAL - TY A1	M	—		—		—		—		—		—		—	
567.32 M	ARM JNT SYS WI COMPRESSION SEAL - TY A2	M	—		—		—		—		—		—		—	
567.35 M	ARM JNT SYS WI COMPRESSION SEAL - TY A5	M	—		13		17		—		—		17		17	
567.36 M	ARM JNT SYS WI COMPRESSION SEAL - TY A6	M	—		—		—		—		—		—		—	
18567.46 M	ELASTOMERIC CONCRETE FOR BRIDGE JOINT SYSTEMS	M	—		—		—		31		21		—		—	
16567.640001 M	REPLACE COMPRESSION SEAL IN EXISTING BRIDGE JOINTS	M	—		—		—		—		—		—		—	
568.32 M	CEMENT MORTAR PADS	EA	—		—		—		—		—		—		—	
568.50 M	STEEL BRIDGE RAILING (2 RAIL)	M	—		—		—		—		—		—		—	
570.090001 M	ENVIRONMENTAL GROUND PROTECTION	LS	—		—		—		NEC		—		—		—	
570.090002 M	ENVIRONMENTAL GROUND PROTECTION	LS	—		—		—		—		NEC		—		—	
570.090003 M	ENVIRONMENTAL GROUND PROTECTION	LS	—		—		—		—		—		—		—	

ALL DIMENSIONS ARE IN m UNLESS OTHERWISE NOTED

AS BUILT REVISIONS

SIGNATURE DATE

SHEET 10 OF 12

ESTIMATE OF QUANTITIES

STATE OF NEW YORK
DEPARTMENT OF TRANSPORTATION

FILENAME	REGION	DATE	DRAWING NO.
305613J.1A	3	10/02	QE-4A

CHECKED BY
DRAFTED BY
ESTIMATED BY
CHECKED BY
DESIGNED BY
JOB MANAGER
DESIGN SUPERVISOR

FED ROAD REG. NO.	STATE	CONTRACT NO.	SHEET NO.	TOTAL SHEETS
1	N.Y.	D259214	190	432

BRIDGE REHABILITATION PROJECT (ELEMENT SPECIFIC)
VARIOUS BRIDGES ON INTERSTATE 481
TOWNS OF DEWITT AND CICERO
ONONDAGA COUNTY
P.I.N. 305613 B.I.N. VARIOUS

ESTIMATE OF QUANTITIES BY STRUCTURE

ITEM #	DESCRIPTION	UNIT	1093550		1093561		1093562		1093571		1093572		1093671		1093672	
			EST.	FINAL	EST.	FINAL	EST.	FINAL	EST.	FINAL	EST.	FINAL	EST.	FINAL	EST.	FINAL
570.090004 M	ENVIRONMENTAL GROUND PROTECTION	LS	—		—		—		—		—		—		—	
570.100001 M	ENVIRONMENTAL WATERWAY PROTECTION	LS	—		—		—		NEC		—		—		—	
570.100002 M	ENVIRONMENTAL WATERWAY PROTECTION	LS	—		—		—		—		NEC		—		—	
16570.32 M	LOCALIZED PAINTING OF BARE STRUCTURAL STEEL	SM	—		—		—		18		21		—		—	
16570.72 M	LOCALIZED VACUUM CONTAINED CLEANING OF STRUCTURAL STEEL PLANAR SURFACES	SM	—		—		—		18		21		—		—	
16570.76 M	LOCALIZED VACUUM CONTAINED CLEANING OF STRUCTURAL STEEL - IRREGUALR	SM	—		—		—		—		—		—		—	
571.010001 M	TREATMENT AND DISPOSAL OF PAINT REMOVAL WASTE	CM	—		—		—		1		—		—		—	
571.010002 M	TREATMENT AND DISPOSAL OF PAINT REMOVAL WASTE	CM	—		—		—		—		1		—		—	
571.010003 M	TREATMENT AND DISPOSAL OF PAINT REMOVAL WASTE	CM	—		—		—		—		—		—		—	
571.010004 M	TREATMENT AND DISPOSAL OF PAINT REMOVAL WASTE	CM	—		—		—		—		—		—		—	
572.010001 M	STRUCTURAL STEEL PAINT SYSTEM: SHOP APPLIED	SM	—		—		—		1		—		—		—	
572.010002 M	STRUCTURAL STEEL PAINT SYSTEM: SHOP APPLIED	SM	—		—		—		—		1		—		—	
576.2001M	DOWNSPOUT SYSTEM, DUCTILE IRON	M	—		—		—		3		4		—		—	
578.020001 M	OVERLAY CONCRETE - CLASS E	SM	—		—		—		—		—		—		—	
578.020002 M	OVERLAY CONCRETE - CLASS E	SM	—		—		—		—		—		—		—	
578.020003 M	OVERLAY CONCRETE - CLASS E	SM	—		—		—		—		—		—		—	
578.020004 M	OVERLAY CONCRETE - CLASS E	SM	—		—		—		—		77		—		—	
578.020005 M	OVERLAY CONCRETE - CLASS E	SM	—		—		12		—		—		—		—	
578.030001 M	SLAB RECONSTRUCTION CONCRETE - CLASS D OR E	SM	—		—		—		—		—		—		—	
578.030002 M	SLAB RECONSTRUCTION CONCRETE - CLASS D OR E	SM	—		—		—		—		—		—		—	
578.030003 M	SLAB RECONSTRUCTION CONCRETE - CLASS D OR E	SM	—		—		—		—		—		—		—	
578.030004 M	SLAB RECONSTRUCTION CONCRETE - CLASS D OR E	SM	—		—		—		—		77		—		—	
578.030005 M	SLAB RECONSTRUCTION CONCRETE - CLASS D OR E	SM	—		—		12		—		—		—		—	
578.030006 M	SLAB RECONSTRUCTION CONCRETE - CLASS D OR E	SM	—		—		—		—		—		—		—	
578.030007 M	SLAB RECONSTRUCTION CONCRETE - CLASS D OR E	SM	—		—		—		—		—		—		—	
579.02 M	REINFORCING BAR EXPOSURE	SM	—		—		12		—		77		—		—	
580.01 M	REMOVAL OF STRUCTURAL CONCRETE	CM	2		2		2		62		15		2		2	
582.05 M	REMOVE STRUCTURAL CONCRETE WITH CLASS A CONCRETE	CM	16		1		1		43		46		2		5	
582.07 M	REMOVE STRUCTURAL CONCRETE AND REPLACE WITH VERTICAL OVERHEAD PATCH MATERIAL	SM	—		—		—		151		221		—		—	
16584.13 M	RAPID SETTING CONCRETE FOR BRIDGE AND APPROACH SLAB REPAIRS	KG	—		—		—		—		—		—		—	
585.01 M	STRUCTURAL LIFTING OPERATIONS - TYPE A	EA	12		—		—		—		—		—		—	
585.02 M	STRUCTURAL LIFTING OPERATIONS - TYPE B	EA	—		—		—		21		25		—		—	
585.03 M	STRUCTURAL LIFTING OPERATIONS TYPE C	EA	—		—		—		35		35		—		—	
586.01 M	DRILL AND GROUT BOLTS, OR REINFORCING BARS	mm	19200		13050		16650		53700		59100		15600		15600	
17586.18M	DRILLING HOLES IN EXISITING SUBSTRUCTURE	M	—		—		—		—		—		—		—	
16586.200125 M	DRILL AND GROUT ANCHOR BOLTS AND REBAR IN CONCRETE	EA	—		—		—		—		—		—		—	
16586.200216 M	DRILL AND GROUT ANCHOR BOLTS AND REBAR IN CONCRETE	EA	—		—		—		—		—		—		—	
587.01 M	BRIDGE RAILING REMOVAL AND DISPOSAL	M	—		—		—		—		—		—		—	
589.520001 M	REMOVAL OF EXISTING STEEL	EA	—		—		—		4		—		—		—	
589.520002 M	REMOVAL OF EXISTING STEEL	EA	—		—		—		—		6		—		—	
589.520003 M	REMOVAL OF EXISTING STEEL	EA	—		—		—		—		—		—		—	
589.520004 M	REMOVAL OF EXISTING STEEL	EA	—		—		—		—		—		—		—	
589.520005 M	REMOVAL OF EXISTING STEEL	EA	—		—		—		8		—		—		—	
590.01M	VERTICAL ADJUSTMENT OF BRIDGE DRAINAGE DEVICES	EA	—		—		—		7		9		—		—	
603.6001 M	REINFORCED CONCRETE PIPE CLASS III, 300 mm	M	—		—		—		—		4		—		—	
603.7301M	REINFORCED CONCRETE PIPE END SECTION 300 mm DIAMETER	EA	—		—		—		—		3		—		—	

ALL DIMENSIONS ARE IN m UNLESS OTHERWISE NOTED

AS BUILT REVISIONS

SIGNATURE DATE

SHEET 11 OF 12

ESTIMATE OF QUANTITIES

STATE OF NEW YORK
DEPARTMENT OF TRANSPORTATION

FILENAME	REGION	DATE	DRAWING NO.
305613J1A	3	10/02	QE-4B

DESIGN SUPERVISOR ____ JOB MANAGER ____ ESTIMATED BY ____ DESIGNED BY ____ DRAFTED BY ____ CHECKED BY ____ CHECKED BY ____

FED ROAD REG. NO.	STATE	CONTRACT NO.	SHEET NO.	TOTAL SHEETS
1	N.Y.	D259214	191	432

BRIDGE REHABILITATION PROJECT (ELEMENT SPECIFIC)
VARIOUS BRIDGES ON INTERSTATE 481
TOWNS OF DEWITT AND CICERO
ONONDAGA COUNTY
P.I.N. 305613 B.I.N. VARIOUS

ESTIMATE OF QUANTITIES BY STRUCTURE

ITEM #	DESCRIPTION	UNIT	1093550		1093561		1093562		1093571		1093572		1093671		1093672	
			EST.	FINAL	EST.	FINAL	EST.	FINAL	EST.	FINAL	EST.	FINAL	EST.	FINAL	EST.	FINAL
605.0901 M	UNDERDRAIN FILTER TYPE 1	CM	—		—		—		—		—		—		—	
605.1702 M	OPT. UNDERDRAIN PIPE 150 mm ø	M	—		—		—		—		—		—		—	
606.73 M	REMOVE AND DISPOSE OF BOX BEAM GUIDE RAIL	M	—		—		—		—		—		—		—	
606.8701 M	CORRUGATED BEAM GUIDE RAILING TRANSITION ASSEMBLY, TWO RAIL, STEEL BRIDGE RAILING	EA	—		—		—		2		2		—		—	
16606.80 M	TRANSITION BRIDGE RAILING TO BOX BEAM GUIDE RAIL	M	—		—		—		—		—		—		—	
609.15 M	RESETTING EXISTING CURB	M	—		—		—		—		—		—		—	
610.0203 M	ESTABLISH TURF	SM	—		—		—		100		200		—		—	
612.0205 M	CLASS II TYPE B EROSION CONTROL MATERIAL	SM	—		—		—		100		150		—		—	
08615.0402 M	TREE AND VEGETATION BARRIER	M	—		—		—		150		150		—		—	
620.03 M	STONE FILLING (LIGHT)	CM	—		—		—		6		8		—		—	
625.01 M	SURVEY AND STAKEOUT	LS	—		—		—		—		—		—		—	
637.03 M	CONCRETE CYLINDER CURING BOX	EA	—		—		—		—		—		—		—	
637.0702 M	ENGINEER'S OFFICE TYPE C	MNTH	—		—		—		—		—		—		—	
10637.2101 M	FURN PORTABLE CELLULAR TELEPHONE EQUIP.	LS	—		—		—		—		—		—		—	
08637.3501 M	MICRO COMPUTER SYSTEM	EA	—		—		—		—		—		—		—	
15637.61 M	CPM SCHEDULE	LS	—		—		—		—		—		—		—	
15637.51 M	DIGITAL CAMERA SYSTEM	LS	—		—		—		—		—		—		—	
15637.91 M	CHAMPS MANAGEMENT SYSTEM	LS	—		—		—		—		—		—		—	
15637.98 M	PARTNERING WORKSHOP	LS	—		—		—		—		—		—		—	
640.10 M	WHITE PAINT REFLEC PAVEMENT STRIPES-0.38 mm	M	12		8		9		8		8		9		9	
640.11 M	YELLOW PAINT REFLEC PAVEMENT STRIPES-0.38 mm	M	9		4		6		6		6		6		6	
14646.10 M	MILLED IN AUDIBLE ROWAY DELINS (MIARD)	M	—		—		—		—		—		—		—	
23675.15M	FURNISH AND PLACE STONE BALLAST SURFACING COURSE	MT	—		—		—		—		2		—		—	
91685.0705 M	WHT POLYESTER REFLEC PAVEMENT STRIPE	M	12		8		9		8		8		9		9	
91685.0706 M	YEL POLYESTER REFLEC PAVEMENT STRIPE	M	9		4		6		6		6		6		6	
697.02 M	FIELD CHANGE ORDER	LS	—		—		—						—		—	
699.040001 M	MOBILIZATION	LS	NEC		NEC		NEC		NEC		NEC		NEC		NEC	

STANDARD SYMBOL (PLANS)	ITEM PAYMENT UNIT: ESTIMATE OF QUANTITIES SHEET	EQUIVALENT NOMENCLATURE: SPEC BOOK/PROPOSAL
m	M	METER
m^2	SQM	SQUARE METER
m^3	CM	CUBIC METER
km	KM	KILOMETER
ha	HA	HECTARE
kg	KG	KILOGRAM
† OR Mg*	MT	METRIC TON
L	L	LITER

* THE METRIC TON IS EQUIVALENT TO ONE MEGAGRAM (Mg)

ALL DIMENSIONS ARE IN m UNLESS OTHERWISE NOTED

AS BUILT REVISIONS

SIGNATURE DATE

SHEET 12 OF 12

ESTIMATE OF QUANTITIES

STATE OF NEW YORK
DEPARTMENT OF TRANSPORTATION

FILENAME	REGION	DATE	DRAWING NO.
305613.L1A	3	10/02	QE-4C

DESIGN SUPERVISOR ____ JOB MANAGER ____ DESIGNED BY ____ CHECKED BY ____ ESTIMATED BY ____ DRAFTED BY ____ CHECKED BY ____

FED ROAD REG. NO.	STATE	CONTRACT NO.	SHEET NO.	TOTAL SHEETS
1	N.Y.	D259214	284	432

BRIDGE REHABILITATION PROJECT (ELEMENT SPECIFIC)
VARIOUS BRIDGES ON INTERSTATE 481
TOWNS OF DEWITT AND CICERO
ONONDAGA COUNTY
P.I.N. 305613 | B.I.N. 1093571 & 1093572

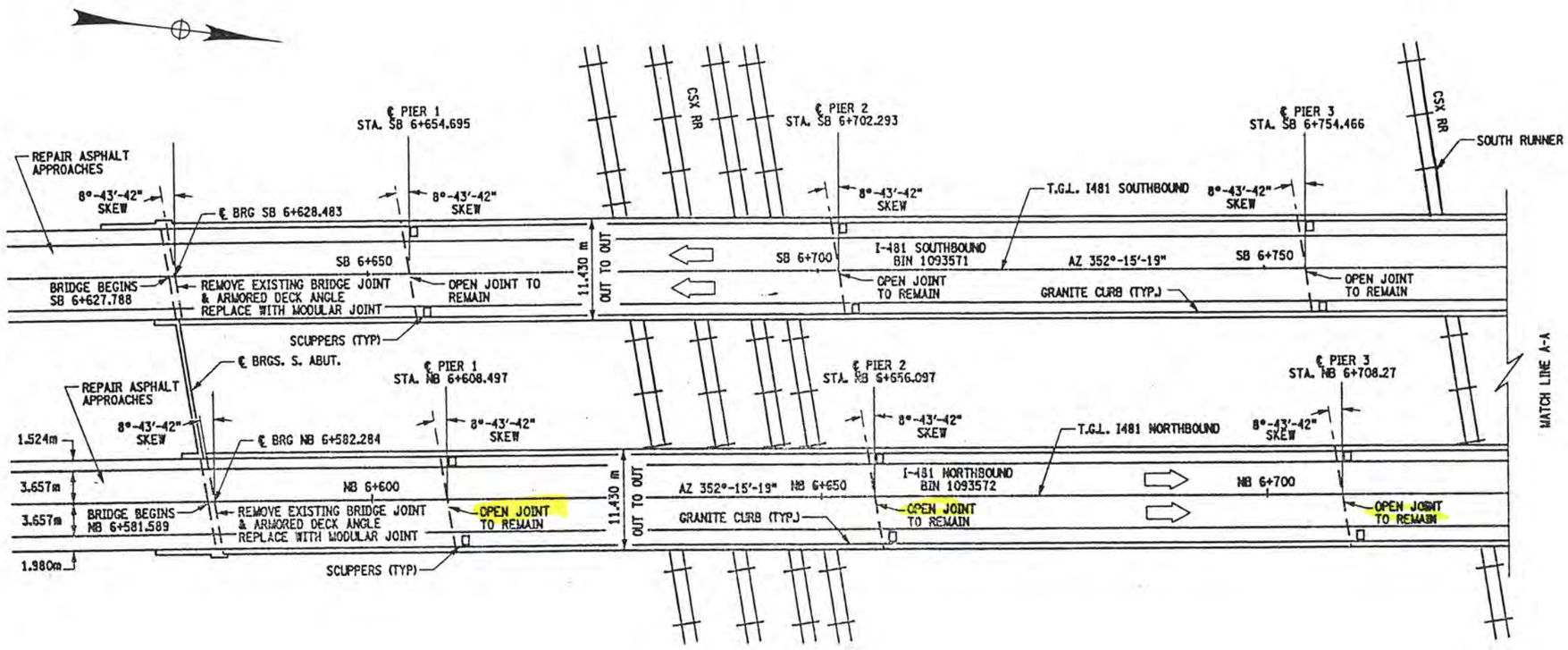

PLAN

SCALE 1:300

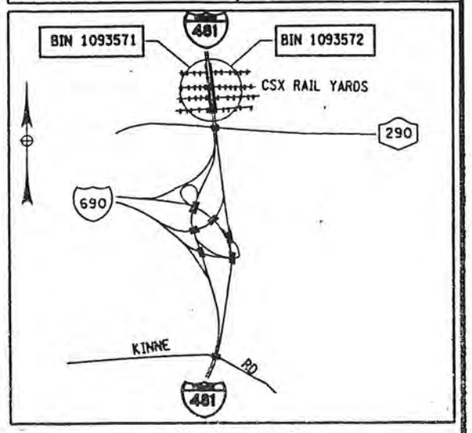

LOCATION MAP
NOT TO SCALE

NOTES:

SEE DWG. GP17-2 FOR WORK TO BE DONE ON BIN 1093571 AND DWG. GP17-3 FOR WORK TO BE DONE ON BIN 1093572.

REFER TO DWG. NO. JT-3 AND JT-4 FOR BRIDGE JOINT INFORMATION.

ELECTRIC UTILITY IN THE VICINITY OF BRIDGES. SEE INFORMATION AVAILABLE TO BIDDERS FOR ADDITIONAL INFORMATION.

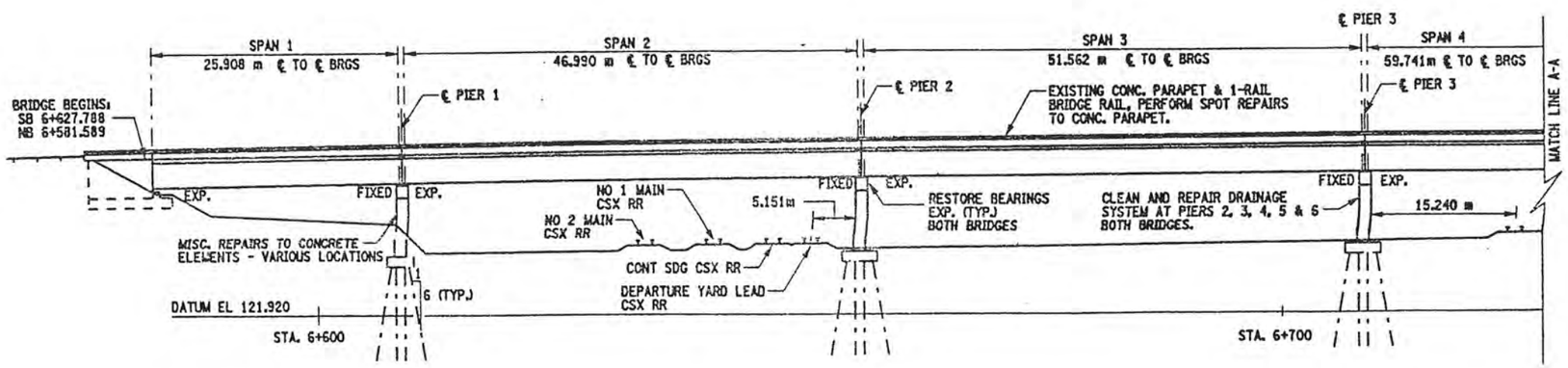

ELEVATION

SCALE 1:300

BIN 1093571 SOUTHBOUND
BIN 1093572 NORTHBOUND

ALL DIMENSIONS ARE IN m UNLESS OTHERWISE NOTED

AS BUILT REVISIONS

SIGNATURE | DATE

INTERSTATE 481
OVER
CSX RAILROAD YARD

PLAN AND ELEVATION
1 OF 4

STATE OF NEW YORK
DEPARTMENT OF TRANSPORTATION

FILENAME	REGION	DATE	DRAWING NO.
305613AE.G1A	3	10/02	GP17-1

DESIGN SUPERVISOR ___ JOB MANAGER ___ DESIGNED BY ___ ESTIMATED BY ___ DRAFTED BY ___ CHECKED BY ___ CHECKED BY ___

FED ROAD REG. NO.	STATE	CONTRACT NO.	SHEET NO.	TOTAL SHEETS
1	N.Y.	D259214	285	432

BRIDGE REHABILITATION PROJECT (ELEMENT SPECIFIC)
VARIOUS BRIDGES ON INTERSTATE 481
TOWNS OF DEWITT AND CICERO
COUNTY OF ONONDAGA
P.I.N. 305613 | B.I.N. 1093571 & 1093572

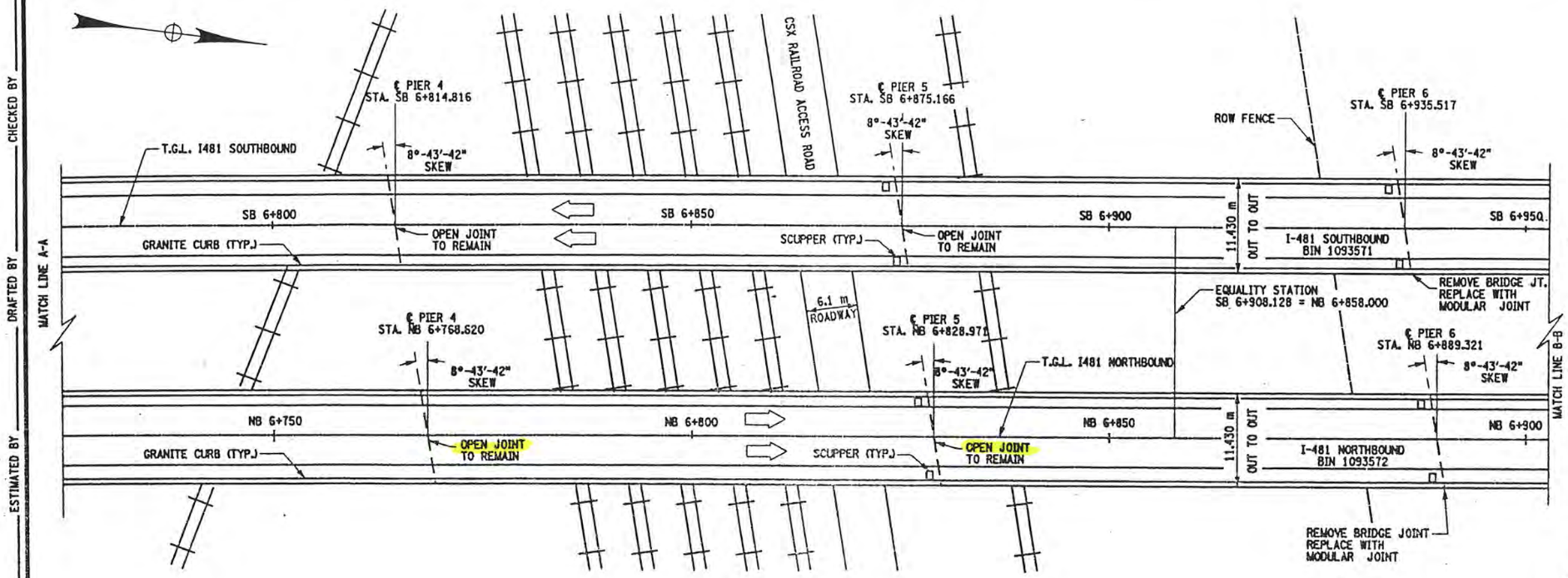

PLAN

SCALE 1:300

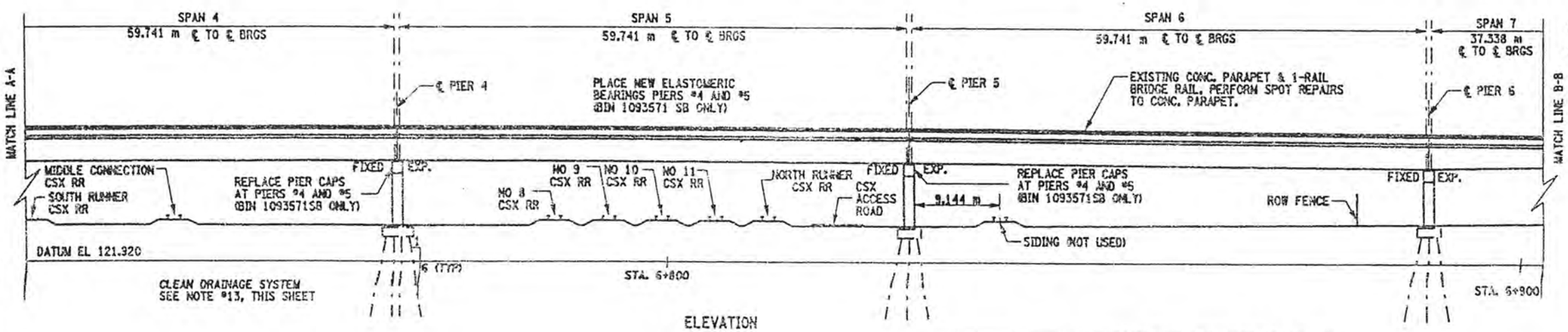

ELEVATION

SCALE 1:300

TRACK	VERTICAL CLEARANCE	HORIZONTAL CLEARANCE
	METERS	METERS
NO 2 MAIN	7.468	16.000
NO 1 MAIN	7.295	NA
CONT SDG	7.498	NA
DEPARTURE YARD LEAD	7.559	5.151
SOUTH RUNNER	8.169	15.240
MIDDLE CONNECTION	8.077	NA
NO 8	8.077	17.891
NO 9	8.077	NA
NO 10	8.077	NA
NO 11	8.169	NA
NORTH RUNNER	8.169	NA
SIDING	NA	9.144

NOTE: ALL DIMENSIONS SHOWN IN THIS TABLE ARE FIELD MEASUREMENTS.

WORK TO BE DONE ON BIN 1093571 SB: (NOT NECESSARILY IN THIS ORDER)

1. ESTABLISH MP&T SCHEME FOR STAGE CONSTRUCTION, (RR TRAFFIC CONTROL REQUIRED).
2. REMOVE EXISTING BRIDGE JOINTS AT THE BEGINNING ABUTMENT (TO INCLUDE ARMORING DECK ANGLE) AND PIERS #6, #7, #8, #10, #11 #12, #13 AND #14.
3. INSTALL NEW BRIDGE JOINTS, (MODULAR ONE-CELL JOINT SYSTEM).
4. INSTALL NEW COMPRESSION SEALS AT THE PARAPET SECTIONS OF THE EXISTING OPEN JOINTS, (PIERS #1, #2, #3, #4, #5 & #9). REPAIR EXISTING CONCRETE PARAPETS. OPEN JOINTS TO REMAIN.
5. REMOVE EXISTING ARMORING DECK ANGLE, AT END ABUTMENT.
6. REPAIR THE DECK AREA, WHERE ARMORING ANGLE WAS REMOVED.
7. PERFORM MINOR REPAIRS TO ASPHALT APPROACHES.
8. REPAIR THE CONCRETE ELEMENTS (I.E. PIER CAPS, PIER COLUMNS AND PIER PEDESTALS).
9. PERFORM BEARING RESTORATION TO ALL EXPANSION BEARINGS (TO INCLUDE RESETTING OF UNDER EXTENDED BEARINGS).
10. REMOVE PIER CAP #4 AND #5, TO INCLUDE PEDESTALS AND BEARINGS.
11. CONSTRUCT NEW PIER CAPS AND PEDESTALS AT PIERS #4 AND #5.
12. PLACE NEW BEARINGS AT PIERS #4 & #5, (ELASTOMERIC BEARINGS).
13. CLEAN AND MODIFY EXISTING CLOSED DRAINAGE SYSTEM AT PIERS #1, #2, #3, #4, #5 AND #9.
14. INSTALL SCUPPER DOWNSPOUT EXTENSIONS AT EXISTING SCUPPERS, SPANS #7 THRU #14.
15. PERFORM DRAINAGE IMPROVEMENTS AT RR YARD.
16. REPAIR EXISTING CONCRETE PARAPETS.

BIN 1093571 SOUTHBOUND
BIN 1093572 NORTHBOUND
ALL DIMENSIONS ARE IN m UNLESS OTHERWISE NOTED

AS BUILT REVISIONS

SIGNATURE | DATE

INTERSTATE 481
OVER
CSX RAILROAD YARD
PLAN AND ELEVATION
2 OF 4

STATE OF NEW YORK
DEPARTMENT OF TRANSPORTATION

FILENAME	REGION	DATE	DRAWING NO.
305613AE.G1A	3	10/02	GP17-2

CHECKED BY
DRAFTED BY
ESTIMATED BY
CHECKED BY
DESIGNED BY
JOB MANAGER
DESIGN SUPERVISOR

FED ROAD REG. NO.	STATE	CONTRACT NO.	SHEET NO.	TOTAL SHEETS
1	N.Y.	D259214	286	432

BRIDGE REHABILITATION PROJECT (ELEMENT SPECIFIC)
VARIOUS BRIDGES ON INTERSTATE 481
TOWNS OF DEWITT AND CICERO
COUNTY OF ONONDAGA
P.I.N. 305613 | B.I.N. 1093571 & 1093572

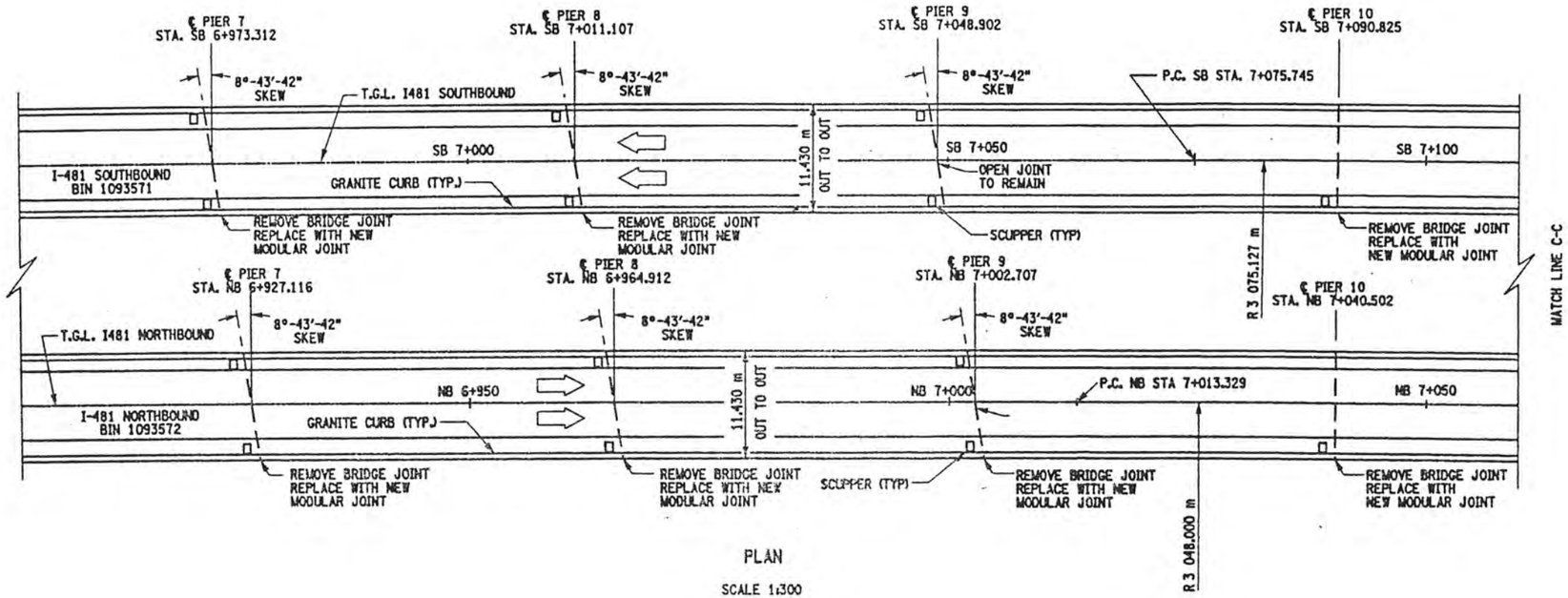

PLAN
SCALE 1:300

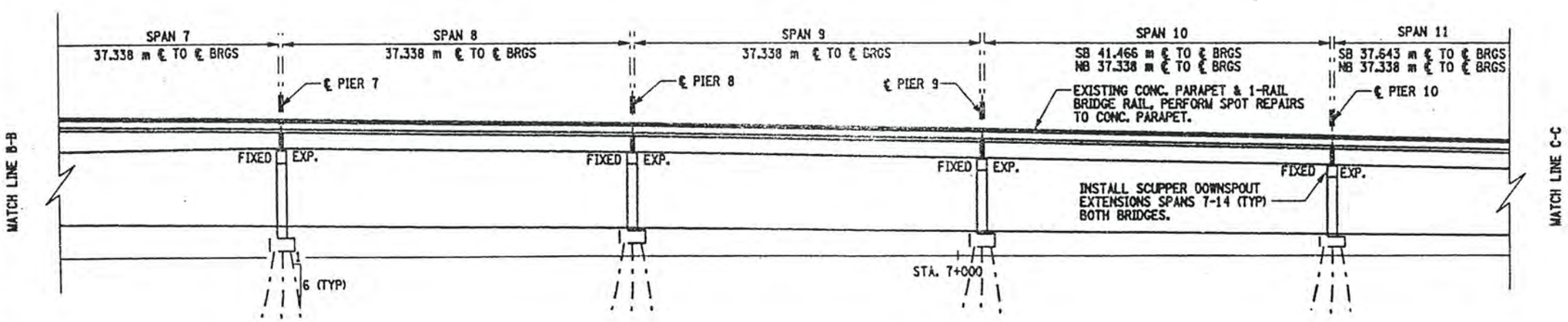

ELEVATION
SCALE 1:300

CURVE DATA	
SOUTHBOUND	NORTHBOUND
P.C.=7+075.745	P.C.=7+013.329
Δ=7°-04'-13"	Δ=7°-04'-13"
R=3075.127	R=3048.000
L=379.470	L=376.122
T=189.976	T=188.300

WORK TO BE DONE ON BIN 1093572, NB: (NOT NECESSARILY IN THIS ORDER)

1. ESTABLISH MP&T SCHEME FOR STAGE CONSTRUCTION, (RR TRAFFIC CONTROL REQUIRED).
2. REMOVE EXISTING BRIDGE JOINT AT BEGINNING ABUTMENT AND PIERS #6, #7, #8, #9, #10, #11, #12, #13 AND #14.
3. INSTALL NEW BRIDGE JOINTS, (MODULAR ONE-CELL JOINTS).
4. INSTALL NEW COMPRESSION SEALS AT THE PARAPET SECTIONS OF THE EXISTING OPEN JOINTS AT PIERS #1, #2, #3, #4 AND #5.
5. REPAIR EXISTING CONCRETE PARAPETS.
6. PERFORM REBAR EXPOSURE IN AREAS SHOWN ON PLANS, OR A.O.B.E. TO REPACE ASPHALT PATCHES, (SPOT REPAIRS TO BRIDGE DECK).
7. PLACE SLAB RECONSTRUCTION CONCRETE.
8. REMOVE EXISTING ARMORING DECK ANGLE, AT END ABUTMENT.
9. REPAIR THE BRIDGE DECK AREA AT THE END ABUTMENT, WHERE THE ARMORING DECK ANGLE WAS REMOVED.
10. PERFORM MINOR REPAIRS TO ASPHALT APPROACHES.
11. REPAIR CONCRETE ELEMENTS, (PIER CAPS, COLUMNS AND PEDESTALS).
12. PERFORM BEARING RESTORATION TO ALL EXPANSION BEARINGS (TO INCLUDE RESETTING OF UNDER EXTENDED BEARINGS).
13. CLEAN AND MODIFY EXISTING CLOSED DRAINAGE SYSTEMS AT PIERS #1, #2, #3, #4, #5 AND #6.
14. INSTALL SCUPPER DOWNSPOUT EXTENSIONS AT EXISTING SCUPPERS, SPANS #7 THRU #14.
15. PERFORM DRAINAGE IMPROVEMENTS AT RR YARD.

BIN 1093571 SOUTHBOUND
BIN 1093572 NORTHBOUND
ALL DIMENSIONS ARE IN m UNLESS OTHERWISE NOTED

AS BUILT REVISIONS

SIGNATURE | DATE

INTERSTATE 481
OVER
CSX RAILROAD YARD
PLAN AND ELEVATION
3 OF 4

STATE OF NEW YORK
DEPARTMENT OF TRANSPORTATION

FILENAME	REGION	DATE	DRAWING NO.
305613AE.G1A	3	10/02	GP17-3

CHECKED BY
DRAFTED BY
ESTIMATED BY
CHECKED BY
DESIGNED BY
JOB MANAGER
DESIGN SUPERVISOR

FED ROAD REG. NO.	STATE	CONTRACT NO.	SHEET NO.	TOTAL SHEETS
1	N.Y.	D259214	287	432

BRIDGE REHABILITATION PROJECT (ELEMENT SPECIFIC)
VARIOUS BRIDGES ON INTERSTATE 481
TOWNS OF DEWITT AND CICERO
COUNTY OF ONONDAGA
P.I.N. 305613 | B.I.N. 1093571 & 1093572

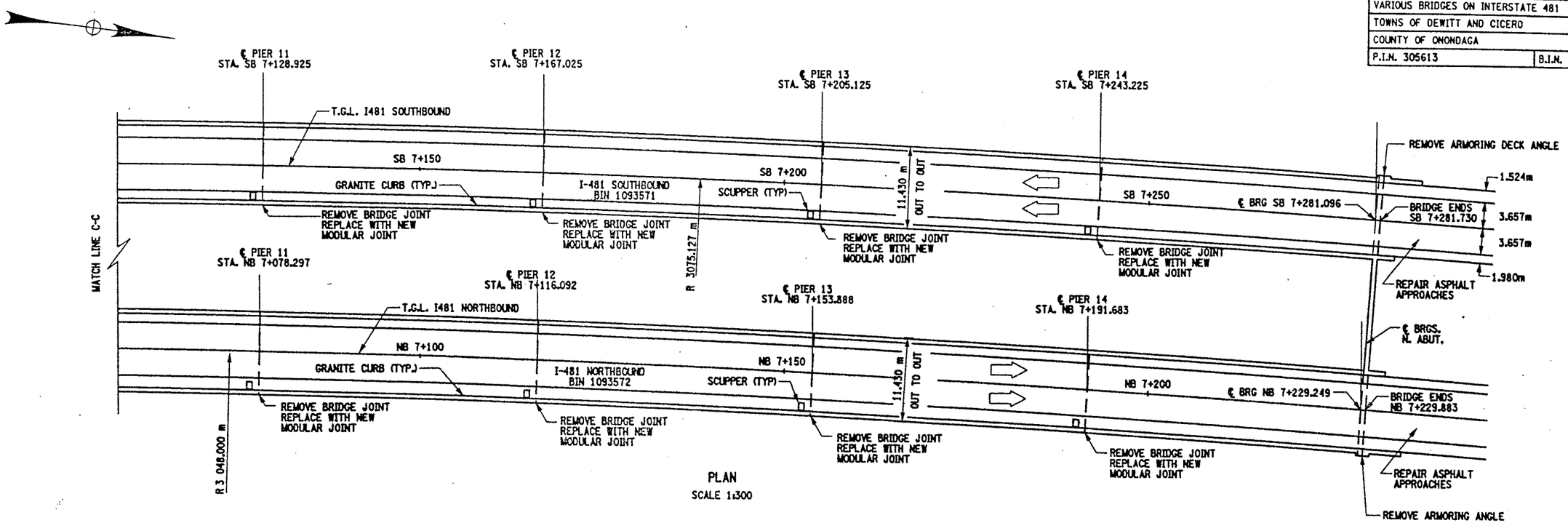

PLAN
SCALE 1:300

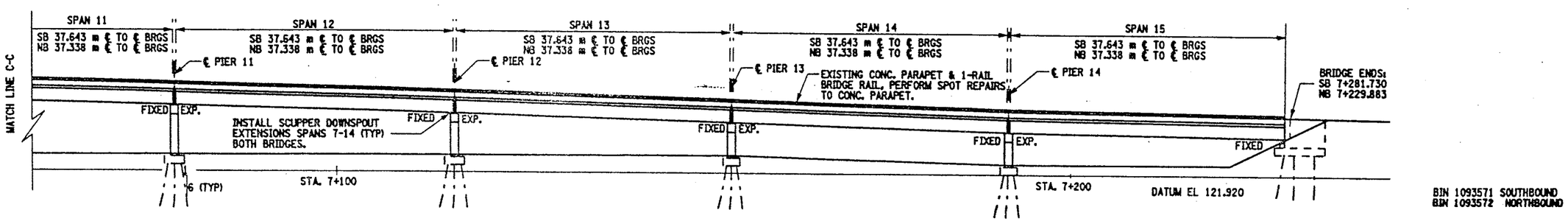

BIN 1093571 SOUTHBOUND
BIN 1093572 NORTHBOUND

ELEVATION
SCALE 1:300

ALL DIMENSIONS ARE IN m UNLESS OTHERWISE NOTED

AS BUILT REVISIONS

SIGNATURE DATE

INTERSTATE 481
OVER
CSX RAILROAD YARD

PLAN AND ELEVATION
4 OF 4

STATE OF NEW YORK
DEPARTMENT OF TRANSPORTATION

FILENAME	REGION	DATE	DRAWING NO.
305613AE.G1A	3	10/02	GP17-4

DESIGN SUPERVISOR ____ JOB MANAGER ____ DESIGNED BY ____ CHECKED BY ____ ESTIMATED BY ____ DRAFTED BY ____ CHECKED BY ____

FEO ROAD REG. NO.	STATE	CONTRACT NO.	SHEET NO.	TOTAL SHEETS
1	N.Y.	D259214	288	432

BRIDGE REHABILITATION PROJECT (ELEMENT SPECIFIC)
VARIOUS BRIDGES ON INTERSTATE 481
TOWNS OF DEWITT AND CICERO
COUNTY OF ONONDAGA
P.I.N. 305613 | B.I.N. 1093571 & 1093572

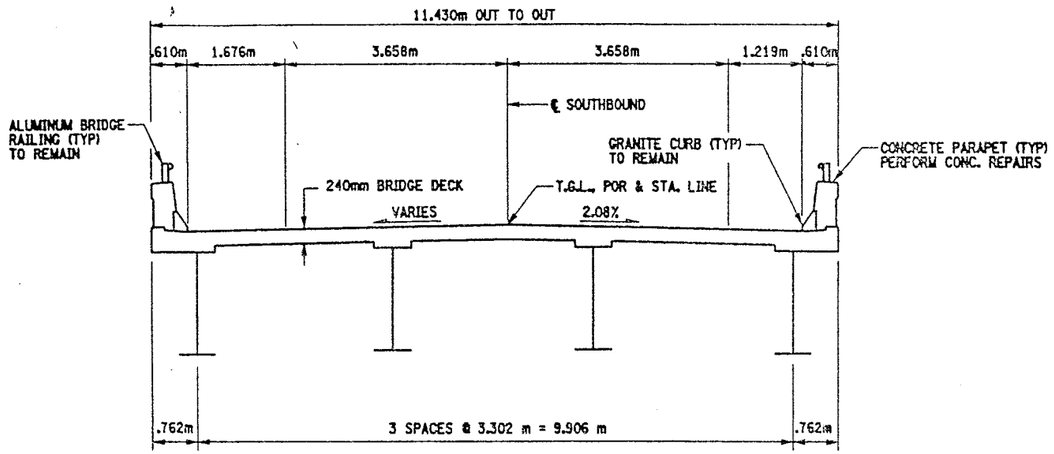

SOUTHBOUND
BIN 1093571

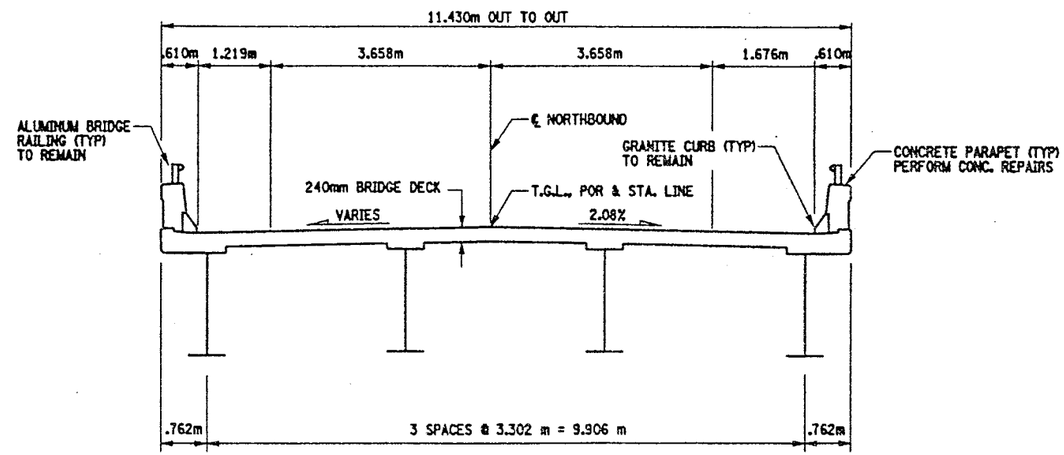

NORTHBOUND
BIN 1093572

TYPICAL BRIDGE SECTIONS

NOTES:

ORIGINAL BRIDGE DECK 203mm MONOLITHIC SLAB.
38mm CONCRETE OVERLAY ADDED LATER.

SEE ORIGINAL CONTRACT PLANS F.I.S.H. 70-7 AND CONTRACT PLANS D251436.

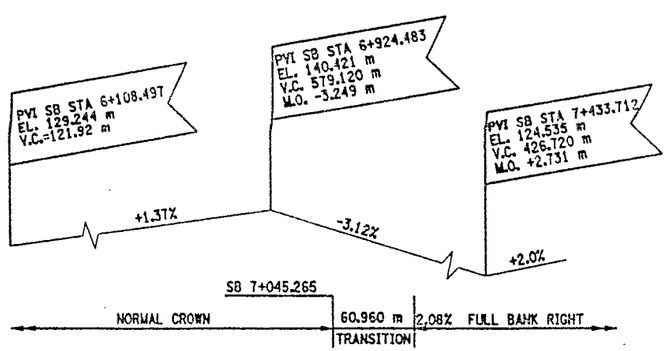

PROFILE SOUTHBOUND
NOT TO SCALE

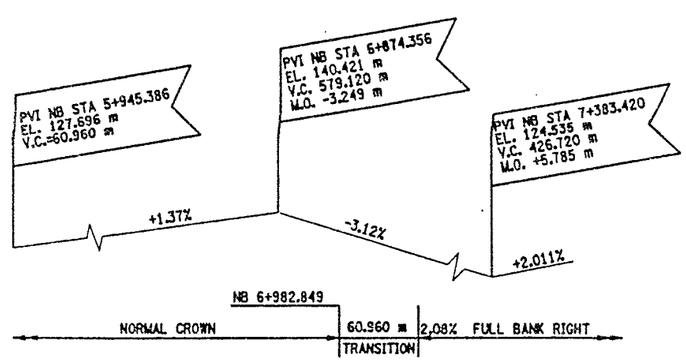

PROFILE NORTHBOUND
NOT TO SCALE

BIN 1093571 SOUTHBOUND
BIN 1093572 NORTHBOUND

ALL DIMENSIONS ARE IN m UNLESS OTHERWISE NOTED

AS BUILT REVISIONS

SIGNATURE | DATE

INTERSTATE 481
OVER
CSX RAILROAD YARD
TYPICAL BRIDGE SECTION
AND PROFILES

STATE OF NEW YORK
DEPARTMENT OF TRANSPORTATION

FILENAME	REGION	DATE	DRAWING NO.
305613AE.G1A	3	10/02	TS17-1

DESIGN SUPERVISOR ____ JOB MANAGER ____ DESIGNED BY ____ ESTIMATED BY ____ DRAFTED BY ____ CHECKED BY ____ CHECKED BY ____

FED ROAD REG. NO.	STATE	CONTRACT NO.	SHEET NO.	TOTAL SHEETS
1	N.Y.	D259214	289	432

BRIDGE REHABILITATION PROJECT (ELEMENT SPECIFIC)

VARIOUS BRIDGES ON INTERSTATE 481

TOWNS OF DEWITT AND CICERO

COUNTY OF ONONDAGA

P.I.N. 305613 | B.I.N. 1093571 & 1093572

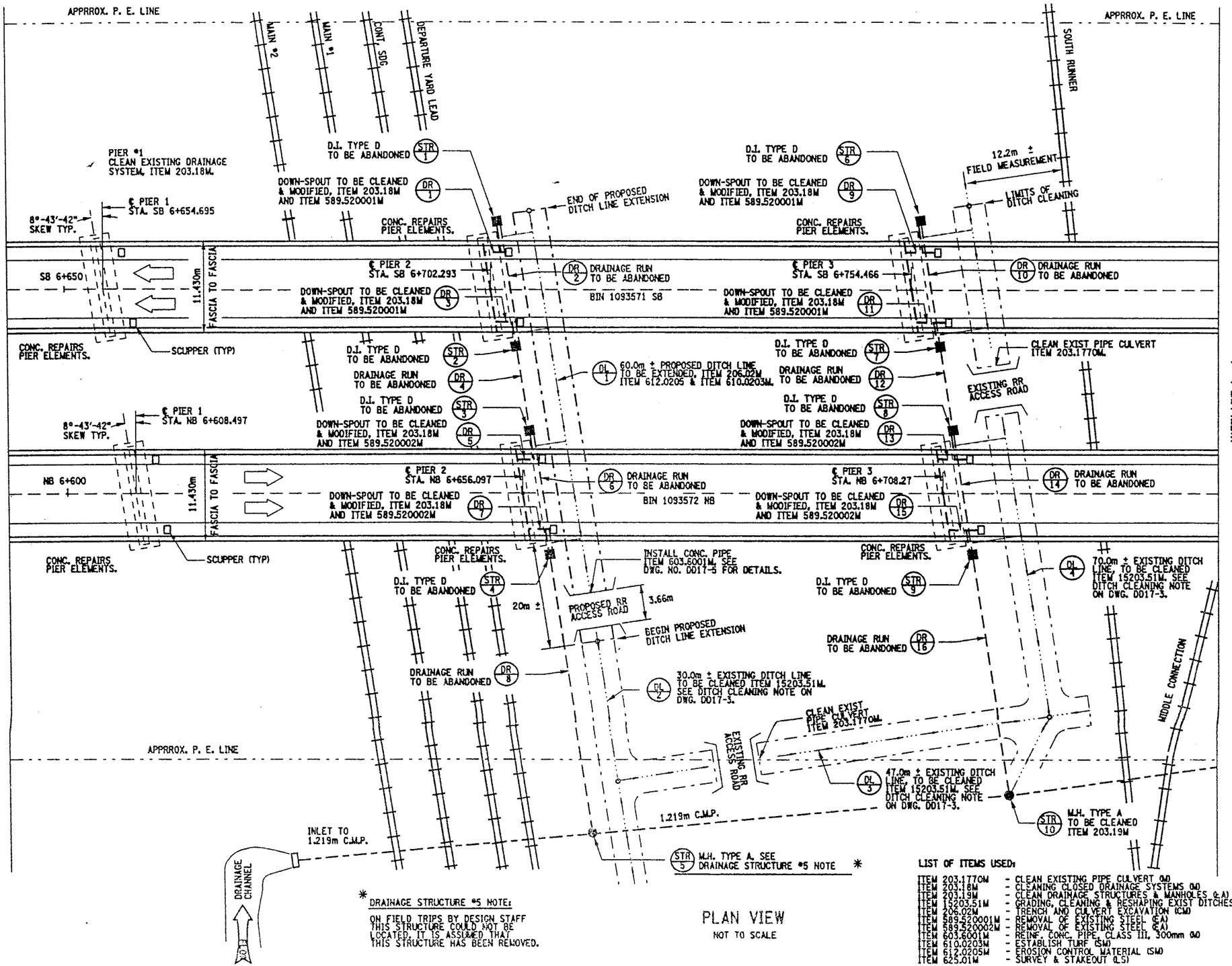

* DRAINAGE STRUCTURE #5 NOTE:

ON FIELD TRIPS BY DESIGN STAFF THIS STRUCTURE COULD NOT BE LOCATED. IT IS ASSUMED THAT THIS STRUCTURE HAS BEEN REMOVED.

PLAN VIEW

NOT TO SCALE

LIST OF ITEMS USED:

ITEM 203.1770M	- CLEAN EXISTING PIPE CULVERT (LM)
ITEM 203.18M	- CLEANING CLOSED DRAINAGE SYSTEMS (LM)
ITEM 203.19M	- CLEAN DRAINAGE STRUCTURES & MANHOLES (EA)
ITEM 15203.51M	- GRADING, CLEANING & RESHAPING EXIST DITCHES (LM)
ITEM 206.02M	- TRENCH AND CULVERT EXCAVATION (CM)
ITEM 589.520001M	- REMOVAL OF EXISTING STEEL (EA)
ITEM 589.520002M	- REMOVAL OF EXISTING STEEL (EA)
ITEM 603.6001M	- REINF. CONC. PIPE, CLASS III, 300mm (LM)
ITEM 610.0203M	- ESTABLISH TURF (SM)
ITEM 612.0205M	- EROSION CONTROL MATERIAL (SM)
ITEM 625.01M	- SURVEY & STAKEOUT (LS)

GENERAL NOTES:

THE PROPOSED DRAINAGE WORK IS BASED ON DRAINAGE INFORMATION FROM ORIGINAL CONTRACT F.I.S.H. 70-7. REFER TO ORIGINAL CONTRACT PLANS FOR DETAILS OF EXISTING DRAINAGE STRUCTURES.

THE CONTRACTOR SHALL VERIFY THIS INFORMATION WITH FIELD SITE INSPECTIONS.

CONTRACTOR SHALL NOTE THAT ALL DRAINAGE SYSTEMS AND STRUCTURES SHALL BE CLEANED UNDER ITEMS 203.18M OR 203.19M.

THE EXACT PLACEMENT OF THE PROPOSED RR ACCESS ROAD (CONC. PIPE CULVERT) SHALL BE AT THE DISCRETION OF THE ENGINEER.

NO EXISTING SURVEY IS AVAILABLE, ITEM 625.01M "SURVEY & STAKEOUT" IS INCLUDED IN CONTRACT FOR ALL NECESSARY WORK, AS DIRECTED BY ENGINEER.

SEE DRAWING NO. D017-3 FOR TABLE OF DRAINAGE WORK AND DITCH LINE WORK, TO BE DONE.

SEE DWG. NO. D017-4 FOR DOWN-SPOUT MODIFICATION DETAILS.

SEE DWG. NO. GN-1 FOR SERIALIZED ITEM NOTES.

SEE DWG. NO. D017-5 FOR PROPOSED CONC. PIPE AND MISCEL. DETAILS.

WORK TO BE DONE:

PIER #1 - CLEAN EXISTING DRAINAGE SYSTEM. PERFORM REPAIRS TO CONCRETE PIER ELEMENTS AND BEARING RESTORATION.

PIER #2 - DRAINAGE STRUCTURES AND DRAINAGE RUNS TO BE ABANDONED. MODIFY EXISTING DOWN-SPOUTS (REFER TO DRAWING NO. D017-4 FOR DETAILS). CLEAN THE REMAINING DRAINAGE SYSTEM. THIS WORK SHALL INCLUDE EXTENSION OF THE EXISTING DITCH LINE AND INSTALLATION OF A CULVERT PIPE. ALSO CLEANING AND RESHAPING THE EXISTING DITCH LINE. PERFORM REPAIRS TO CONCRETE PIER ELEMENTS AND BEARING RESTORATION.

PIER #3 - DRAINAGE STRUCTURES AND DRAINAGE RUNS TO BE ABANDONED. MODIFY EXISTING DOWN-SPOUTS (REFER TO DRAWING NO. D017-4 FOR DETAILS). CLEAN THE REMAINING DRAINAGE SYSTEM. THIS WORK SHALL ALSO INCLUDE CLEANING THE EXISTING DITCH LINE AND CLEANING EXISTING CULVERT PIPE. PERFORM REPAIRS TO CONCRETE PIER ELEMENTS AND BEARING RESTORATION.

PIER #4 - CLEAN EXISTING DRAINAGE SYSTEM TO INCLUDE ANY REPAIRS TO DRAINAGE STRUCTURES.
NORTH BOUND, PERFORM REPAIRS TO CONCRETE PIER ELEMENTS AND BEARING RESTORATION. SOUTH BOUND, REPLACE PIER CAP.

PIER #5 - CLEAN EXISTING DRAINAGE SYSTEM TO INCLUDE ANY REPAIRS TO DRAINAGE STRUCTURES AND INSTALLATION OF A NEW OUTLET SECTION (305mm RCCP)
NORTH BOUND, PERFORM REPAIRS TO CONCRETE PIER ELEMENTS AND BEARING RESTORATION. SOUTH BOUND, REPLACE PIER CAP.

PIER #6 (NB ONLY)- DRAINAGE STRUCTURES AND DRAINAGE RUNS TO BE ABANDONED. MODIFY EXISTING DOWN-SPOUTS (REFER TO DRAWING NO. D017-4 FOR DETAILS). CLEAN REMAINING DRAINAGE SYSTEM. PERFORM REPAIRS TO CONCRETE PIER ELEMENTS AND BEARING RESTORATION. CONSTRUCT A SWALE TO DIRECT RUNOFF AWAY FROM PIER AND RR PROPERTY.

PIER #9 (SB ONLY) - CLEAN EXISTING DRAINAGE SYSTEM.

SEE DRAWING NO. GP17-2 AND GP17-3 FOR COMPLETE LISTING OF WORK TO BE DONE.

ALL DIMENSIONS ARE IN m UNLESS OTHERWISE NOTED

AS BUILT REVISIONS

SIGNATURE | DATE

INTERSTATE 481
OVER
CSX RAILROAD YARD

DRAINAGE DETAILS

STATE OF NEW YORK
DEPARTMENT OF TRANSPORTATION

FILENAME	REGION	DATE	DRAWING NO.
305613AE.G1A	3	10/02	D017-1

CHECKED BY ____ DRAFTED BY ____ ESTIMATED BY ____ CHECKED BY ____ DESIGNED BY ____ JOB MANAGER ____ DESIGN SUPERVISOR ____

FED ROAD REG. NO.	STATE	CONTRACT NO.	SHEET NO.	TOTAL SHEETS
1	N.Y.	D259214	290	432

BRIDGE REHABILITATION PROJECT (ELEMENT SPECIFIC)
VARIOUS BRIDGES ON INTERSTATE 481
TOWNS OF DEWITT AND CICERO
COUNTY OF ONONDAGA
P.I.N. 305613 B.I.N. 1093571 & 1093572

NOTES:

THE PROPOSED DRAINAGE WORK IS BASED ON DRAINAGE INFORMATION FROM ORIGINAL CONTRACT F.I.S.H. 70-7.

THE CONTRACTOR SHALL VERIFY THIS INFORMATION WITH FIELD SITE INSPECTIONS.

SEE WORK TO BE DONE AND GENERAL NOTES ON DWG. NO. DD17-1.

SEE DWG. NO. DD17-3 FOR TABLE OF DRAINAGE WORK TO BE DONE.

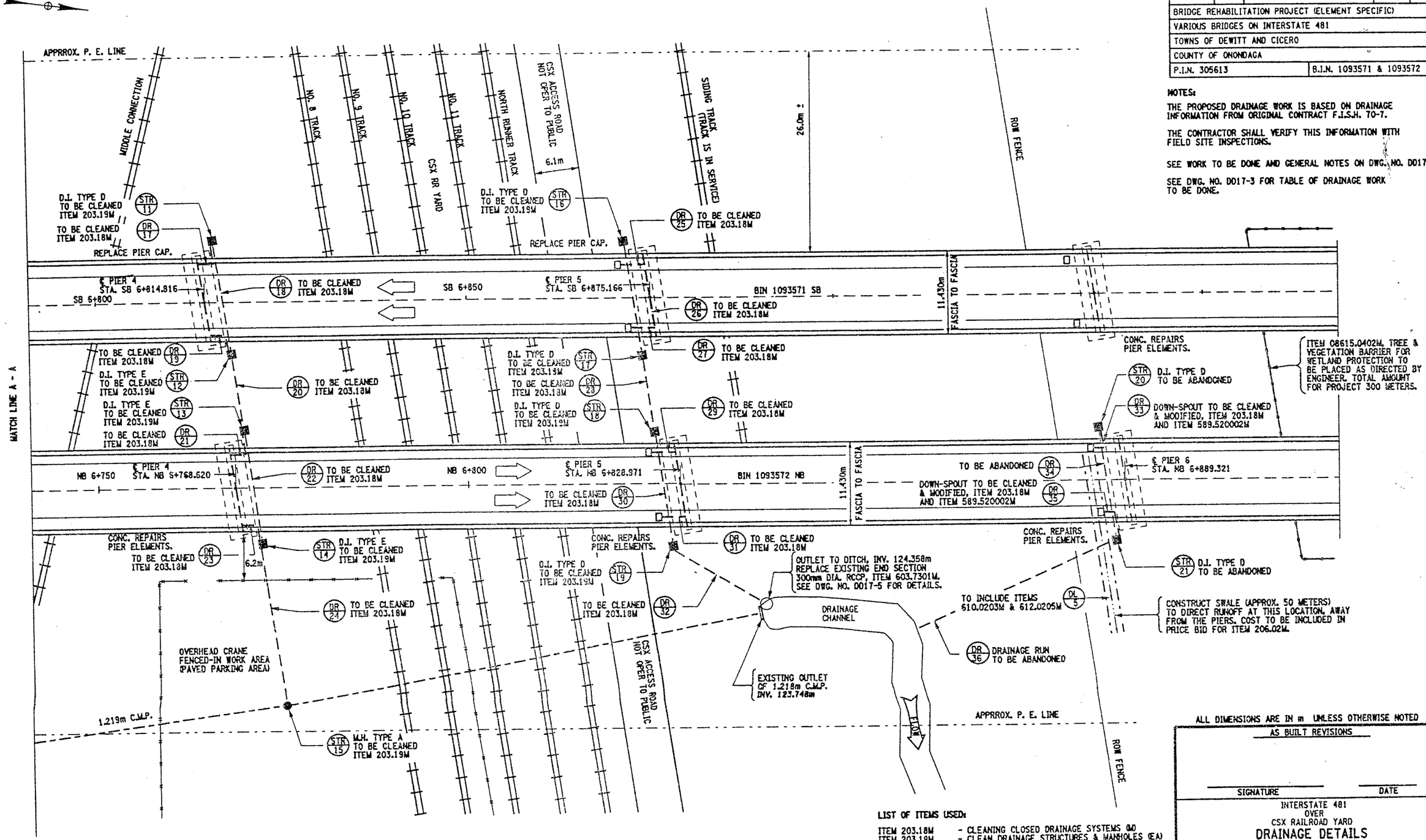

PLAN VIEW
NOT TO SCALE

LIST OF ITEMS USED:

ITEM 203.18M	- CLEANING CLOSED DRAINAGE SYSTEMS (M)
ITEM 203.19M	- CLEAN DRAINAGE STRUCTURES & MANHOLES (EA)
ITEM 206.02M	- TRENCH AND CULVERT EXCAVATION (CM)
ITEM 589.520002M	- REMOVAL OF EXISTING STEEL (EA)
ITEM 603.7301M	- REINF. CONC. PIPE END SECTION, 300mm (EA)
ITEM 610.0203M	- ESTABLISH TURF (SM)
ITEM 612.0205M	- EROSION CONTRAL MATERIAL (SM)
ITEM 08615.0402M	- TREE AND VEGTATION BARRIER (M)

ALL DIMENSIONS ARE IN m UNLESS OTHERWISE NOTED

AS BUILT REVISIONS

SIGNATURE DATE

INTERSTATE 481
OVER
CSX RAILROAD YARD
DRAINAGE DETAILS

STATE OF NEW YORK
DEPARTMENT OF TRANSPORTATION

FILENAME	REGION	DATE	DRAWING NO.
305613AE.G1A	3	10/02	DD17-2

DESIGN SUPERVISOR ____ JOB MANAGER ____ DESIGNED BY ____ CHECKED BY ____ ESTIMATED BY ____ DRAFTED BY ____ CHECKED BY ____

FED ROAD REG. NO.	STATE	CONTRACT NO.	SHEET NO.	TOTAL SHEETS
1	N.Y.	D259214	291	432

BRIDGE REHABILITATION PROJECT (ELEMENT SPECIFIC)
VARIOUS BRIDGES ON INTERSTATE 481
TOWNS OF DEWITT AND CICERO
COUNTY OF ONONDAGA
P.I.N. 305613 B.I.N. 1093571 & 1093572

DRAINAGE RUN TABLE

DR NO	FROM STRUCTURE	203mm C.I.P.	305mm R.C.C.P.	TO STRUCTURE	WORK TO BE DONE	REMARKS
1	B.I.N. 1093571 SB, PIER 2, WEST COLUMN	18.0m		STR. #1	ITEM 203.18M/589.520001M	CLEAN & OUTLET TO GROUND
2	STR. #1			STR. #2		TO BE ABANDONED
3	B.I.N. 1093571 SB, PIER 2, EAST COLUMN	18.0m		STR. #2	ITEM 203.18M/589.520001M	CLEAN & OUTLET TO GROUND
4	STR. #2			STR. #3		TO BE ABANDONED
5	B.I.N. 1093572 NB, PIER 2, WEST COLUMN	18.0m		STR. #3	ITEM 203.18M/589.520002M	CLEAN & OUTLET TO GROUND
6	STR. #3			STR. #4		TO BE ABANDONED
7	B.I.N. 1093572 NB, PIER 2, EAST COLUMN	18.0m		STR. #4	ITEM 203.18M/589.520002M	CLEAN & OUTLET TO GROUND
8	STR. #4			STR. #5	—	TO BE ABANDONED
9	B.I.N. 1093571 SB, PIER 3, WEST COLUMN	18.0m		STR. #6	ITEM 203.18M/589.520001M	CLEAN & OUTLET TO GROUND
10	STR. #6			STR. #7		TO BE ABANDONED
11	B.I.N. 1093571 SB, PIER 3, EAST COLUMN	18.0m		STR. #7	ITEM 203.18M/589.520001M	CLEAN & OUTLET TO GROUND
12	STR. #7			STR. #8		TO BE ABANDONED
13	B.I.N. 1093572 NB, PIER 3, WEST COLUMN	18.0m		STR. #8	ITEM 203.18M/589.520002M	CLEAN & OUTLET TO GROUND
14	STR. #8			STR. #9		TO BE ABANDONED
15	B.I.N. 1093572 NB, PIER 3, EAST COLUMN	18.0m		STR. #9	ITEM 203.18M/589.520002M	CLEAN & OUTLET TO GROUND
16	STR. #9			STR. #10		TO BE ABANDONED
17	B.I.N. 1093571 SB, PIER 4, WEST COLUMN	18.0m		STR. #11	ITEM 203.18M	CLEAN
18	STR. #11		14.6m	STR. #12	ITEM 203.18M	CLEAN
19	B.I.N. 1093571 SB, PIER 4, EAST COLUMN	18.0m		STR. #12	ITEM 203.18M	CLEAN
20	STR. #12		9.8m	STR. #13	ITEM 203.18M	CLEAN
21	B.I.N. 1093572 NB, PIER 4, WEST COLUMN	18.0m		STR. #13	ITEM 203.18M	CLEAN
22	STR. #13		14.6m	STR. #14	ITEM 203.18M	CLEAN
23	B.I.N. 1093572 NB, PIER 4, EAST COLUMN	18.0m		STR. #14	ITEM 203.18M	CLEAN
24	STR. #14		22.8m	STR. #15	ITEM 203.18M	CLEAN
25	B.I.N. 1093571 SB, PIER 5, WEST COLUMN	18.0m		STR. #16	ITEM 203.18M	CLEAN
26	STR. #16		13.4m	STR. #17	ITEM 203.18M	CLEAN
27	B.I.N. 1093571 SB, PIER 5, EAST COLUMN	18.0m		STR. #17	ITEM 203.18M	CLEAN
28	STR. #17		9.3m	STR. #18	ITEM 203.18M	CLEAN
29	B.I.N. 1093572 NB, PIER 5, WEST COLUMN	18.0m		STR. #18	ITEM 203.18M	CLEAN
30	STR. #18		14.6m	STR. #19	ITEM 203.18M	CLEAN
31	B.I.N. 1093572 NB, PIER 5, EAST COLUMN	18.0m		STR. #19	ITEM 203.18M	CLEAN
32	STR. #19		12.6m	TO OUTLET	ITEM 203.18M/603.7301M	CLEAN AND REPLACE END SECTION
33	B.I.N. 1093572 NB, PIER 6, WEST COLUMN	14.0m		STR. #20	ITEM 203.18M/589.520002M	CLEAN & OUTLET TO GROUND
34	STR. #20			STR. #21		TO BE ABANDONED
35	B.I.N. 1093572 NB, PIER 6, EAST COLUMN	14.0m		STR. #21	ITEM 203.18M/589.520002M	CLEAN & OUTLET TO GROUND
36	STR. #21			TO OUTLET		TO BE ABANDONED
	PIER #1 BOTH BRIDGES	64.0m				
	PIER #9 SB (ONLY)	32.0m				

EST. TOTAL OF ITEM 203.18M IS 525 METERS.

GENERAL NOTES:

THE QUANITIES SHOWN ARE FOR THE PURPOSE OF ESTIMATING THE PROJECT, THE CONTRACTOR SHALL VERIFY THESE QUANITIES.

ELEVATIONS TAKEN FROM ORIGINAL CONTRACT F.I.S.H. 70-7. CONTRACTORS SHALL VERIFY ELEVATIONS.

DRAINAGE RUNS AT THE TROUGHS ARE DIVIDED AT MID-POINT OF PIER.

DRAINAGE STRUCTURE TABLE

STR NO	LOCATION OF STRUCTURE	TYPE	EXISTING T.G.	EXISTING INV.	ITEM USED	REMARKS
1	B.I.N. 1093571 SB, PIER 2, WEST COLUMN	D.I. TYP D	125.882m	124.815m		TO BE ABANDONED
2	B.I.N. 1093571 SB, PIER 2, EAST COLUMN	D.I. TYP D	125.882m	124.724m		TO BE ABANDONED
3	B.I.N. 1093572 NB, PIER 2, WEST COLUMN	D.I. TYP D	125.882m	124.633m		TO BE ABANDONED
4	B.I.N. 1093572 NB, PIER 2, EAST COLUMN	D.I. TYP D	125.882m	124.541m		TO BE ABANDONED
5	35.4m EAST OF STRUCT. #4 (OUTLET INTO 1.219m C.M.P.)	M.H. TYP A	125.882m	124.358m		NO WORK PLANNED
6	B.I.N. 1093571 SB, PIER 3, WEST COLUMN	D.I. TYP D	126.034m	124.998m		TO BE ABANDONED
7	B.I.N. 1093571 SB, PIER 3, EAST COLUMN	D.I. TYP D	126.034m	124.876m		TO BE ABANDONED
8	B.I.N. 1093572 NB, PIER 3, WEST COLUMN	D.I. TYP D	126.034m	124.705m		TO BE ABANDONED
9	B.I.N. 1093572 NB, PIER 3, EAST COLUMN	D.I. TYP D	126.034m	124.678m		TO BE ABANDONED
10	30.8m EAST OF STRUCT. #9 (OUTLET INTO 1.219m C.M.P.)	M.H. TYP A	126.034m	124.571m	ITEM 203.19M	CLEAN
11	B.I.N. 1093571 SB, PIER 4, WEST COLUMN	D.I. TYP D	126.034m	125.120m	ITEM 203.19M	CLEAN
12	B.I.N. 1093571 SB, PIER 4, EAST COLUMN	D.I. TYP E	126.034m	124.876m	ITEM 203.19M	CLEAN
13	B.I.N. 1093572 NB, PIER 4, WEST COLUMN	D.I. TYP E	126.034m	124.785m	ITEM 203.19M	CLEAN
14	B.I.N. 1093572 NB, PIER 4, EAST COLUMN	D.I. TYP E	126.034m	124.693m	ITEM 203.19M	CLEAN
15	22.6m EAST OF STRUCT. #14 (OUTLET INTO 1.219m C.M.P.)	M.H. TYP A	126.034m	124.541m	ITEM 203.19M	CLEAN
16	B.I.N. 1093571 SB, PIER 5, WEST COLUMN	D.I. TYP D	125.943m	124.876m	ITEM 203.19M	CLEAN
17	B.I.N. 1093571 SB, PIER 5, EAST COLUMN	D.I. TYP D	125.943m	124.785m	ITEM 203.19M	CLEAN
18	B.I.N. 1093572 NB, PIER 5, WEST COLUMN	D.I. TYP D	125.943m	124.693m	ITEM 203.19M	CLEAN
19	B.I.N. 1093572 NB, PIER 5, EAST COLUMN	D.I. TYP D	125.943m	124.571m	ITEM 203.19M	CLEAN
20	B.I.N. 1093572 NB, PIER 6, WEST COLUMN	D.I. TYP D	126.339m	125.425m		TO BE ABANDONED
21	B.I.N. 1093572 NB, PIER 6, EAST COLUMN	D.I. TYP D	126.339m	124.663m		TO BE ABANDONED
		GRAND TOTAL OF 10 EACH OF ITEM 203.19M				

TABLE OF DITCH LINES

DL NO	APPROX. LOCATION	ESTIMATED LENGTH	ITEM USED
1	PIER #2, FROM STR. 1 TO EXISTING DITCH LINE	60 METERS ±	206.02M
2	FROM PROPOSED DITCH LINE EXTENTION TO STR. 5	30 METERS ±	15203.51M
3	FROM @ PIER #2 TO @ PIER #3	47 METERS ±	15203.51M
4	FROM @ STR. 10 TO @ STR. 6	70 METERS ±	15203.51M
5	FROM @ STR. 20 TO ROW FENCE	50 METERS ±	206.02M

LIST OF ITEMS USED:

ITEM 203.18M - CLEAN CLOSED DRAINAGE SYSTEMS (M)
ITEM 203.19M - CLEAN DRAINAGE STRUCTURES AND MANHOLES (EA)
ITEM 15203.51M - GRADING, CLEANING & RESHAPING EXISTING DITCH (M)
ITEM 206.02M - TRENCH & CULVERT EXCAVATION (CM)
ITEM 589.520001M - REMOVAL OF EXISTING STEEL (EA)
ITEM 589.520002M - REMOVAL OF EXISTING STEEL (EA)
ITEM 603.7301M - REINF. CONC. PIPE END SECTION (EA)
ITEM 610.0203M - ESTABLISH TURF (SM)
ITEM 612.0205M - EROSION CONTROL MATERIAL (SM)

DITCH CLEANING NOTE:

IN CONJUNCTION WITH THE USE OF ITEM 15203.51M - GRADING, CLEANING & RESHAPING EXISTING DITCHES. ITEM 612.0205M - EROSION CONTROL MATERIAL AND ITEM 610.0203M - ESTABLISH TURF, SHALL ALSO BE INCORPORATED WITH ANY DITCH WORK.

ALL DIMENSIONS ARE IN m UNLESS OTHERWISE NOTED

AS BUILT REVISIONS

SIGNATURE DATE

INTERSTATE 481
OVER
CSX RAILROAD YARD

TABLE OF DRAINAGE RUNS & STRUCTURES

STATE OF NEW YORK
DEPARTMENT OF TRANSPORTATION

FILENAME	REGION	DATE	DRAWING NO.
305613AE.01A	3	10/02	D017-3

CHECKED BY
DRAFTED BY
ESTIMATED BY
CHECKED BY
DESIGNED BY
JOB MANAGER
DESIGN SUPERVISOR

FED ROAD REG. NO.	STATE	CONTRACT NO.	SHEET NO.	TOTAL SHEETS
1	N.Y.	D259214	292	432

BRIDGE REHABILITATION PROJECT (ELEMENT SPECIFIC)
VARIOUS BRIDGES ON INTERSTATE 481
TOWNS OF DEWITT AND CICERO
ONONDAGA COUNTY
P.I.N. 305613 B.I.N. 1093571 & 1093572

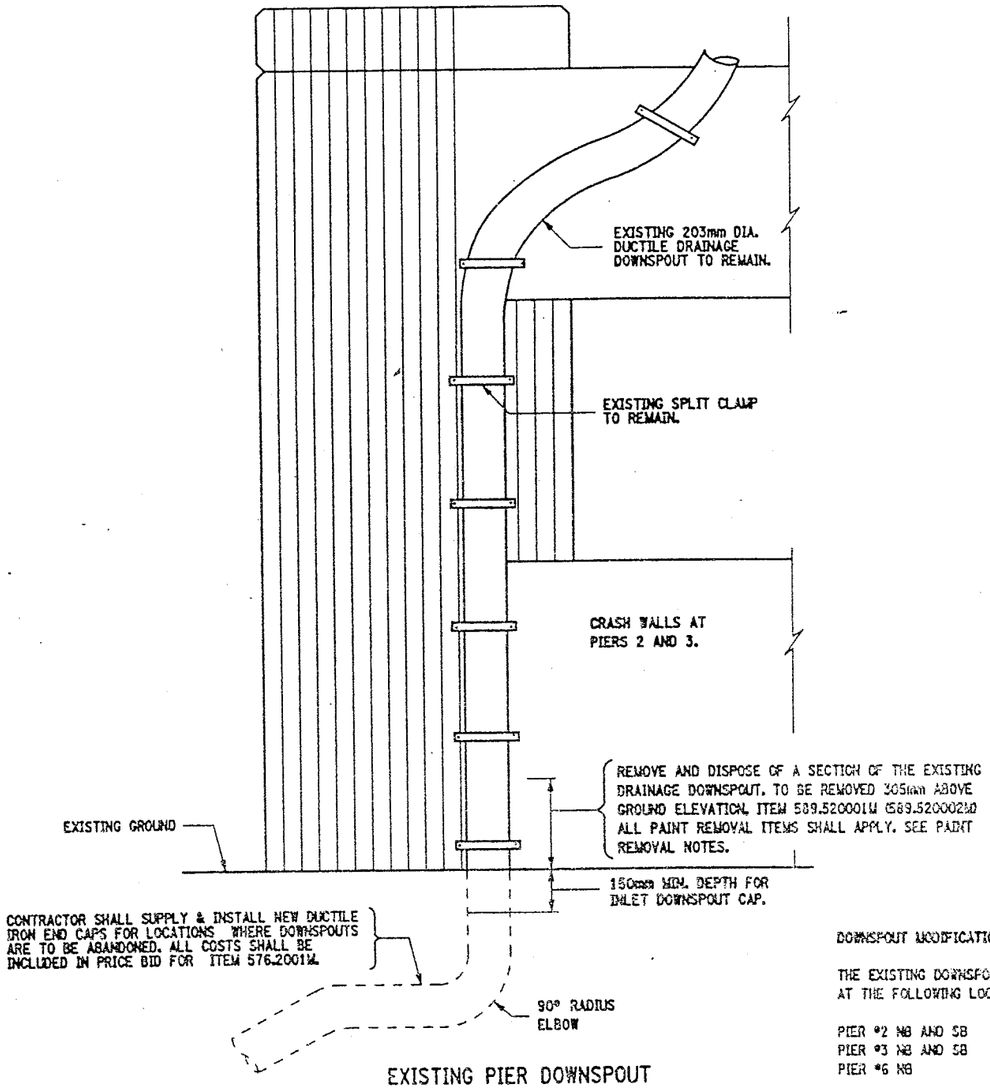

EXISTING PIER DOWNSPOUT

SCALE: 1 TO 10

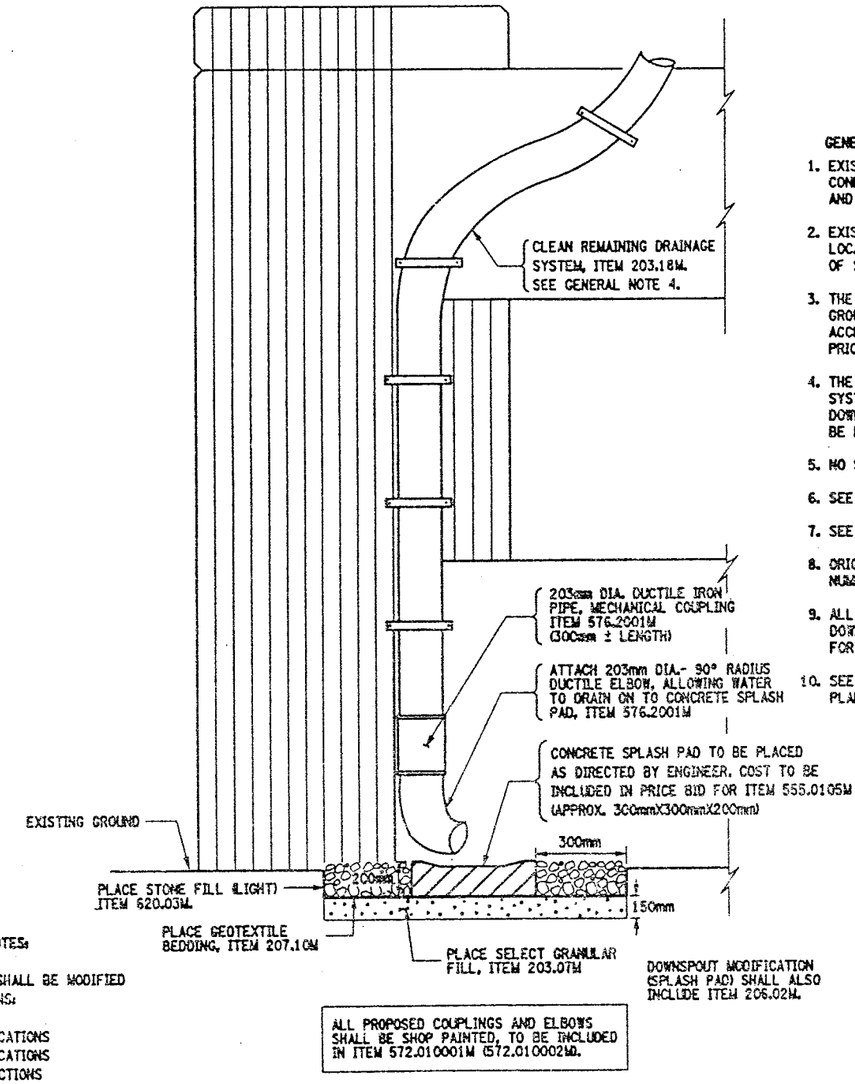

DOWNSPOUT MODIFICATION (SPLASH PAD) SHALL ALSO INCLUDE ITEM 206.02M.

ALL PROPOSED COUPLINGS AND ELBOWS SHALL BE SHOP PAINTED, TO BE INCLUDED IN ITEM 572.010001M (572.010002M).

PROPOSED PIER DOWNSPOUT

SCALE: 1 TO 10

GENERAL NOTES:

1. EXISTING INLET DOWNSPOUT, ADJACENT DRAINAGE STRUCTURES AND CONNECTING DRAINAGE RUNS AT PIER #2 NB & SB, PIER #3 NB & SB AND PIER #6 NORTHBOUND ONLY, TO BE ABANDONED.
2. EXISTING DRAINAGE PIPE (DUCTILE IRON PIPE) SHALL BE CUT OFF AT LOCATION SHOWN OR AS DIRECTED BY ENGINEER. AS PER SECTION 589 OF STANDARD SPECIF. (SEE MODIFICATION NOTES).
3. THE ABANDONED INLET DOWNSPOUT PIPE (THE PORTION STILL IN THE GROUND) SHALL BE CAPPED WITH A DUCTILE IRON CAP, IN A MANNER ACCEPTABLE TO THE ENGINEER. ALL COSTS SHALL BE INCLUDED IN BID PRICE FOR ITEM 576.2001M.
4. THE CONTRACTOR SHALL NOTE THAT CLEANING THE DRAINAGE SYSTEM SHALL INCLUDE SCUPPERS, HOPPERS, TROUGHS AND DOWNSPOUTS. THE CLEANING OF THE DRAINAGE SYSTEM SHALL BE FROM THE BRIDGE DECK TO THE OUTLETTED DOWNSPOUTS.
5. NO SHOP DRAWINGS SHALL BE REQUIRED FOR DOWNSPOUT ELBOW.
6. SEE DRAWINGS NO. D017-1 AND D017-2 FOR MODIFICATION LOCATIONS.
7. SEE DRAWING NO. D017-3 FOR TABLE OF DRAINAGE WORK TO BE DONE.
8. ORIGINAL CONTRACT PLANS F.I.S.H. 70-7 AND PREVIOUS CONTRACT NUMBER D251436.
9. ALL COSTS ASSOCIATED WITH THE INSTALLATION OF THE PROPOSED DOWNSPOUT ELBOW & COUPLING TO BE INCLUDED IN THE BID PRICE FOR ITEM 576.2001M.
10. SEE DRAWING NO. D017-8 FOR MISC. DRAINAGE CLEANING DETAILS AND PLAN VIEW OF SPLASH PAD WITH STONE FILL.

DOWNSPOUT MODIFICATION NOTES:

THE EXISTING DOWNSPOUTS SHALL BE MODIFIED AT THE FOLLOWING LOCATIONS:

PIER #2 NB AND SB	4 LOCATIONS
PIER #3 NB AND SB	4 LOCATIONS
PIER #6 NB	2 LOCTIONS
	10 LOCATIONS TOTAL

ANY NECESSARY WORK NEEDED TO PERFORM THESE MODIFICATIONS SHALL BE INCLUDED IN THE PRICE BID FOR ITEM 576.2001M.

ITEM CLARIFICATION NOTE:

ITEM 570.09NNNNM - ENVIRONMENTAL GROUND PROTECTION IS A SERIALIZED ITEM AND THE FOLLOWING PAY ITEMS SHALL BE INCORPORATED BY BRIDGE.

BIN 1093571 SB SHALL USE ITEM 570.090001M
BIN 1093572 NB SHALL USE ITEM 570.090002M

ITEM 572.01NNNNM - STRUCTURAL STEEL PAINT SYSTEM: SHOP APPLIED, IS A SERIALIZED ITEM AND THE FOLLOWING PAY ITEMS SHALL BE INCORPORATED BY BRIDGE.

BIN 1093571 SB SHALL USE ITEM 572.010001M
BIN 1093572 NB SHALL USE ITEM 572.010002M

ITEM 589.52NNNNM - REMOVAL OF EXISTING STEEL IS A SERIALIZED ITEM AND THE FOLLOWING PAY ITEMS SHALL BE INCORPORATED BY BRIDGE.

BIN 1093571 SB SHALL USE ITEM 589.520001M
BIN 1093572 NB SHALL USE ITEM 589.520002M

ITEM 571.01NNNNM - TREATMENT AND DISPOSAL OF PAINT REMOVAL WASTE, IS A SERIALIZED ITEM AND THE FOLLOWING PAY ITEMS SHALL BE INCORPORATED BY BRIDGE.

BIN 1093571 SB SHALL USE ITEM 571.010001M
BIN 1093572 NB SHALL USE ITEM 571.010002M

ALL DIMENSIONS ARE IN m UNLESS OTHERWISE NOTED

PAINT REMOVAL NOTES:

PAINT REMOVAL WORK SHALL BE DONE IN ACCORDANCE WITH REQUIREMENTS OF SECTION 741 OF STANDARD SPECIF.

REMOVE EXISTING PAINT FROM SPECIFIED ELEMENTS, PRIOR TO ANY CUTTING OR WELDING.

PAINT SHALL BE REMOVED TO 100mm MIN. FROM THE PROPOSED WELD/CUT LOCATON.

IN CONJUNCTION WITH THE USE OF ITEM 16570.72M - LOCALIZED VACCUM CONTAINED CLEANING OF STRUCTURAL STEEL. ITEM 570.09NNNNM - ENVIRONMENTAL GROUND PROTECTION AND ITEM 571.01NNNNM - TREATMENT AND DISPOSAL OF PAINT REMOVAL WASTE, SHALL ALSO BE INCORPORATED DURING PAINT REMOVAL OPERATIONS, (SEE ITEM CLARIFICATION NOTE, THIS SHEET).

THIS PAINT REMOVAL OPERATION SHALL BE REGARDED AS "EXEMPT SMALL GENERATOR STATUS" AND ALL PROVISIONS OF PART 372, 6 NYCRR SHALL APPLY .

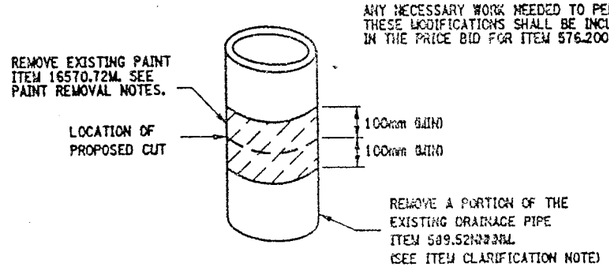

LIMITS OF PAINT REMOVAL

NOT TO SCALE

ITEMS USED:

ITEM 203.07M	- SELECT GRANULAR FILL, (CM)
ITEM 203.18M	- CLEAN CLOSED DRAINAGE SYSTEMS (m)
ITEM 206.02M	- TRENCH & CULVERT EXCAV. (CM)
ITEM 207.10M	- GEOTEXTILE BEDDING, (SM)
ITEM 555.0105M	- CONCRETE FOR STRUCTURES, CLASS "A" (CM)
ITEM 570.090001M	- ENVIRONMENTAL GROUND PROTECTION (LS)
ITEM 570.090002M	- ENVIRONMENTAL GROUND PROTECTION (LS)
ITEM 16570.72M	- LOCALIZED VACUUM CONT. CLEANING STRUCT. STEEL (SM)
ITEM 571.010001M	- TREATMENT & DISPOSAL OF PAINT REMOVAL WASTE (CM)
ITEM 571.010002M	- TREATMENT & DISPOSAL OF PAINT REMOVAL WASTE (CM)
ITEM 572.010001M	- STRUCTURAL STEEL PAINT SYSTEM: SHOP APPLIED (SM)
ITEM 572.010002M	- STRUCTURAL STEEL PAINT SYSTEM: SHOP APPLIED (SM)
ITEM 589.520001M	- REMOVAL OF EXISITNG STEEL (EA)
ITEM 589.520002M	- REMOVAL OF EXISTING STEEL (EA)
ITEM 576.2001M	- DOWNSPOUT SYSTEM, DUCTILE IRON (m)
ITEM 620.03M	- STONE FILL, LIGHT (CM)

AS BUILT REVISIONS

SIGNATURE DATE

INTERSTATE 481 NB AND SB
OVER
CSX RAILROAD YARD

MODIFICATION OF PIER DOWNSPOUTS

STATE OF NEW YORK
DEPARTMENT OF TRANSPORTATION

FILENAME	REGION	DATE	DRAWING NO.
305613AE.D1A	3	10/02	D017-4

DESIGN SUPERVISOR ____ JOB MANAGER ____ ESTIMATED BY ____ DRAFTED BY ____ DESIGNED BY ____ CHECKED BY ____ CHECKED BY ____

FED ROAD REG. NO.	STATE	CONTRACT NO.	SHEET NO.	TOTAL SHEETS
1	N.Y.	D259214	293	432

BRIDGE REHABILITATION PROJECT (ELEMENT SPECIFIC)
VARIOUS BRIDGES ON INTERSTATE 481
TOWNS OF DEWITT AND CICERO
ONONDAGA COUNTY
P.I.N. 305613 B.I.N. 1093571 & 1093572

TYPICAL DITCH LINE NOTES:

1) SEE TABLE OF DITCH LINES DWG NO. D017-3.

2) DIMENSIONS SHOWN ARE FOR ROUGH CALCULATIONS.

3) ITEMS 610.0203M AND ITEM 612.0205M ARE TO BE INCLUDE AT ALL LOCATIONS WHERE ITEM 15203.51M - CLEANING EXISTING DITCH LINES IS USED.

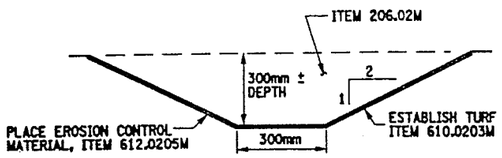

TYPICAL DITCH LINE
DITCH LINE EXTENSION AT PIER #2
NOT TO SCALE

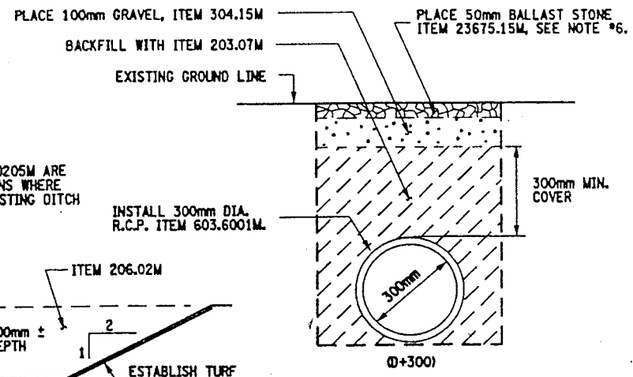

(D+300)

PROPOSED CONCRETE PIPE SECTION X-X
NOT TO SCALE

CULVERT PIPE NOTES:

1) EXTEND EXISTING DITCH LINE FROM ITS CURRENT LOCATION (SEE DWG. NO. D017-1) APPROXIMATELY 20 METER EAST OF PIER #2. TO 5 METERS BEYOND PIER #2, WEST SIDE. THE COST TO BE PAID UNDER ITEM 206.02M. REFER TO "TABLE OF DITCH LINES" DWG. NO. D017-3 FOR DITCH LINE NUMBER #1.

2) INSTALL PIPE CULVERT TO PROVIDE RAILROAD (CSX) ACCESS TO PIER 2. THE EXACT LOCATION OF THE PROPOSED CULVERT SHALL BE DETERMINED BY THE ENGINEER.

3) THE PROPOSED CULVERT PIPE SLOPE TO MATCH THE SLOPE OF THE EXISTING DITCH LINE. NOTE, NO EXISTING SURVEY AVAILABLE, ITEM 625.01M, "SURVEY & STAKEOUT" IS INCLUDED IN CONTRACT. NO PROPOSED INVERT ELEVATIONS GIVEN.

4) REFER TO NYS STANDARD SHEETS M203-4, M203-5 M203-6R1 AND M603-1.

5) NO LEAKAGE TEST REQUIRED.

6) FINISHED GRADE AT PROPOSED CULVERT INSTALLATION PLACEMENT OF ITEM 23675.15M, SHALL BE APPROVED BY CSXT DISTRICT ENGINEER. IF THIS MATERIAL DOES NOT SATISFY THE RAILROAD REQUIREMENTS FOR "APPROVED RAILROAD BALLAST STONE", THEN THE APPROPRIATE MATERIAL SHALL BE SUBSTITUTED FOR ITEM 23675.15M AT NO ADDITIONAL COST TO THE STATE.

7) THE CLASS & SIZE REQUIREMENTS FOR THE BALLAST STONE ITEM 23675.15M, SHALL BE DETERMINED BY THE ENGINEER.

8) INSTALLATION OF R.C.P. END-SECTIONS SHALL INCLUDE STONE FILL, ITEM 620.03M. (PLACED AT INLET & OUTLET OF RCP END- SECTIONS, A0BE).

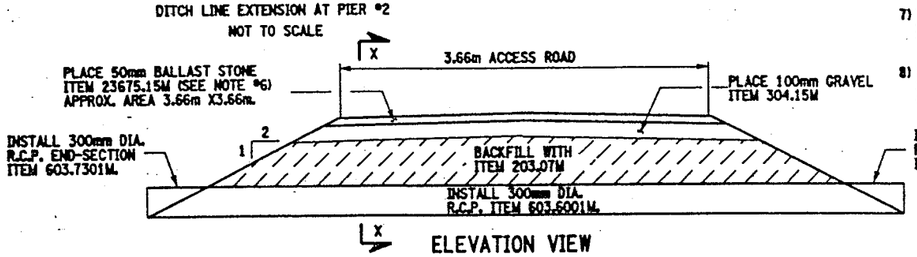

ELEVATION VIEW
NOT TO SCALE

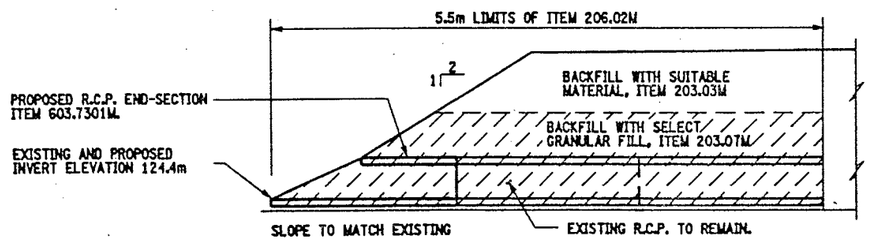

PROPOSED CONCRETE END-SECTION
SECTION VIEW
(DRAINAGE RUN #32)
NOT TO SCALE

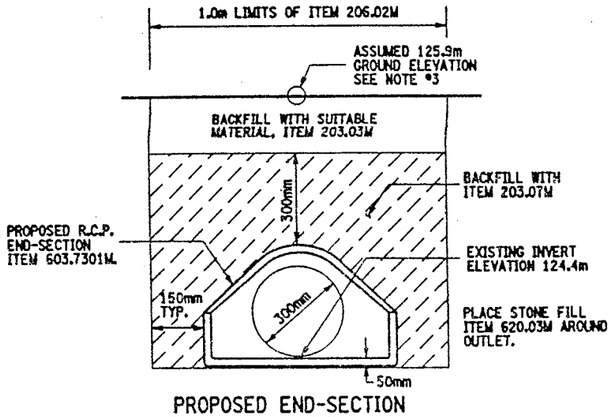

PROPOSED END-SECTION
END VIEW
NOT TO SCALE

END SECTION NOTES:

1) AT THE OUTLET OF DRAINAGE RUN #32 (SEE DWG. NO. D017-2) REMOVE EXISTING R.C.P. END-SECTION AND INSTALL A NEW CONCRETE PIPE END-SECTION, ITEM 603.7301M.

2) ANCHORING OF THE PROPOSED END-SECTION SHALL BE AS PER SECTION 603-3.06 OF STANDARD SPCIFICATIONS AND TO THE SATISFACTION OF THE ENGINEER. COST BE INCLUDED IN THE BID PRICE FOR ITEM 603.7301M.

3) THE ASSUMED GROUND ELEVATION IS TAKEN FROM THE DRAINAGE STRUCTURE TABLE ON DRAWING NO. D017-3 USING STRUCTURE #19 EXISTING T.G. ELEVATION. CONTRACTOR SHALL VERIFY ALL ELEVATIONS, ITEM 625.01M.

4) REFER TO NYS STANDARD SHEET M603-1.

5) INSTALLATION OF R.C.P. END-SECTION SHALL INCLUDE STONE FILL, ITEM 620.03M. (PLACED A.O.B.E.)

ITEMS USED:

ITEM 203.03M - EMBANKMENT IN PLACE (CM)
ITEM 203.07M - SELECT GRANULAR FILL (CM)
ITEM 206.02M - TRENCH & CULVERT EXCAVATION (CM)
ITEM 304.15M - SUBBASE COURSE, OPTIONAL (CM)
ITEM 603.6001M - REINFORCED CONCRETE PIPE CLASS III (M)
ITEM 603.7301M - REINFORCED CONCRETE PIPE END SECTION (EACH)
ITEM 610.0203M - ESTABLISHING TURF (SM)
ITEM 612.0205M - EROSION CONTROL MATERIAL, CLASS II TYPE B (SM)
ITEM 620.03M - STONE FILL, LIGHT, (CM)
ITEM 625.01M - SURVEY & STAKEOUT (L.S.)
ITEM 23675.15M - FURNISH AND PLACE STONE BALLAST SURFACING COURSE (MT)

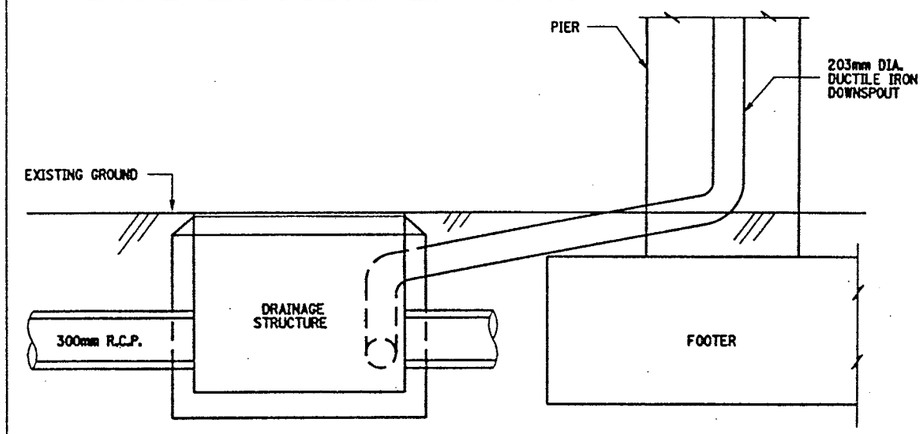

TYPICAL ELEVATION VIEW
DRAINAGE STRUCTURES ADJACENT TO PIERS (RR YARD).
NOT TO SCALE

DRAINAGE STRUCTURE NOTES:

1) SEE DRAWING NO. D017-1 & D017-2 FOR DRAINAGE STRUCTURE LOCATIONS.

2) SEE DRAWING NO. D017-3 FOR TABLE OF DRAINAGE STRUCTURES, TO BE CLEANED OR ABANDONED.

3) REFER TO DRAWING NO. D017-4 FOR MODIFICATION OF DOWNSPOUT DETAILS.

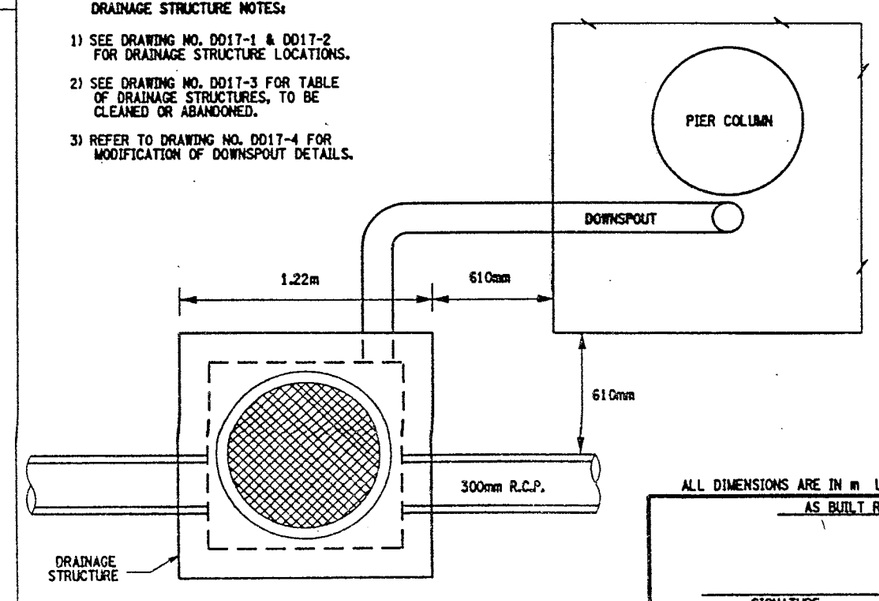

TYPICAL PLAN VIEW
DRAINAGE STRUCTURES ADJACENT TO PIERS (RR YARD).
NOT TO SCALE

ALL DIMENSIONS ARE IN m UNLESS OTHERWISE NOTED

AS BUILT REVISIONS

SIGNATURE DATE

INTERSTATE 481 NB AND SB
OVER
CSX RAILROAD YARD
MISCELLANEOUS DETAILS

STATE OF NEW YORK
DEPARTMENT OF TRANSPORTATION

FILENAME	REGION	DATE	DRAWING NO.
305613AE.D1A	3	10/02	D017-5

CHECKED BY
DRAFTED BY
ESTIMATED BY
CHECKED BY
DESIGNED BY
JOB MANAGER
DESIGN SUPERVISOR

FED ROAD REG. NO.	STATE	CONTRACT NO.	SHEET NO.	TOTAL SHEETS
1	N.Y.	D259214	294	432

BRIDGE REHABILITATION PROJECT (ELEMENT SPECIFIC)
VARIOUS BRIDGES ON INTERSTATE 481
TOWNS OF DEWITT AND CICERO
ONONDAGA COUNTY
P.I.N. 305613 B.I.N. 1093571 & 1093572

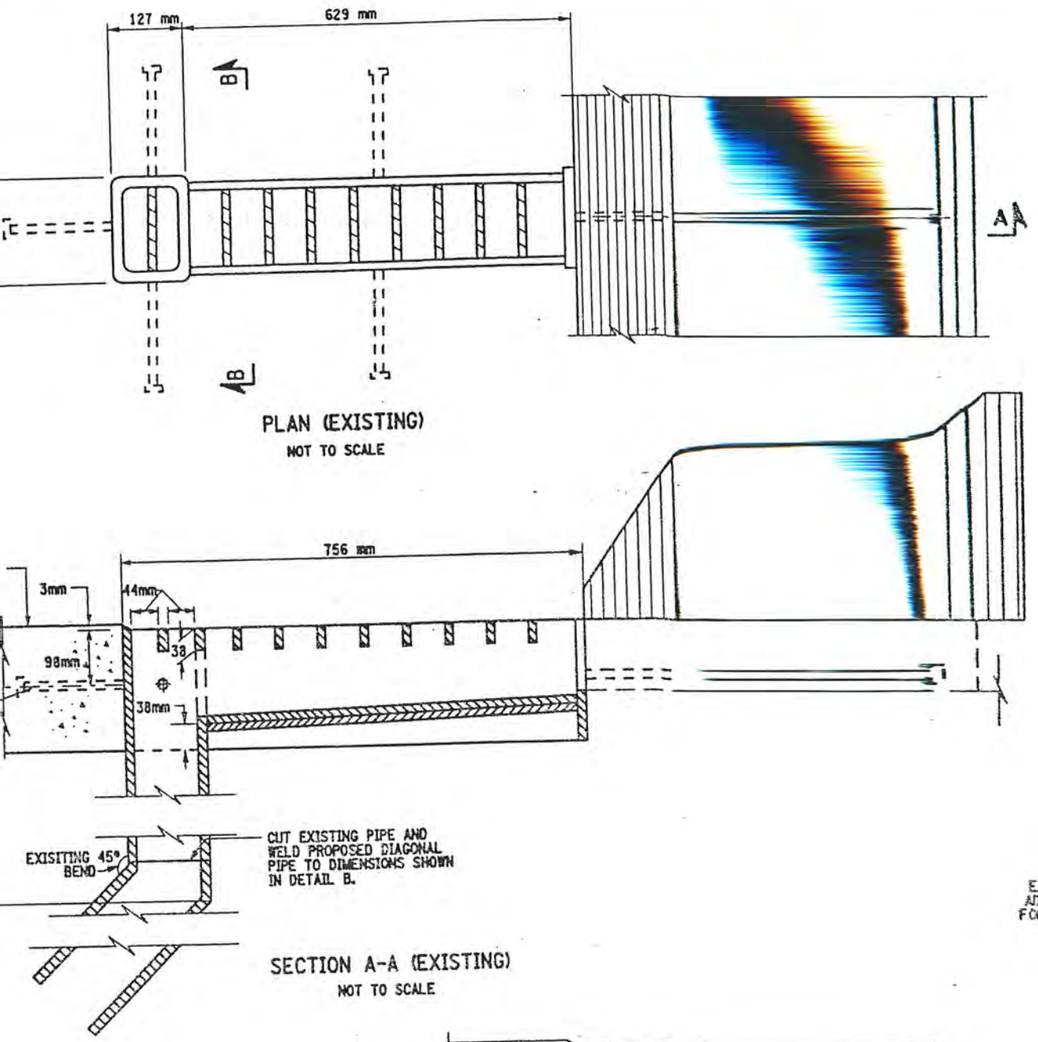

PLAN (EXISTING)
NOT TO SCALE

SECTION A-A (EXISTING)
NOT TO SCALE

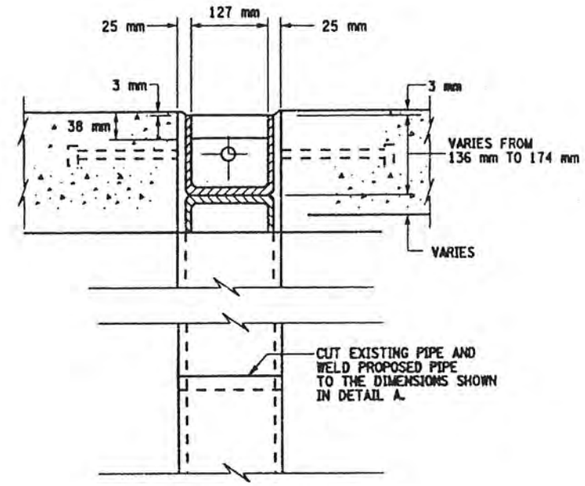

SECTION B-B
NOT TO SCALE

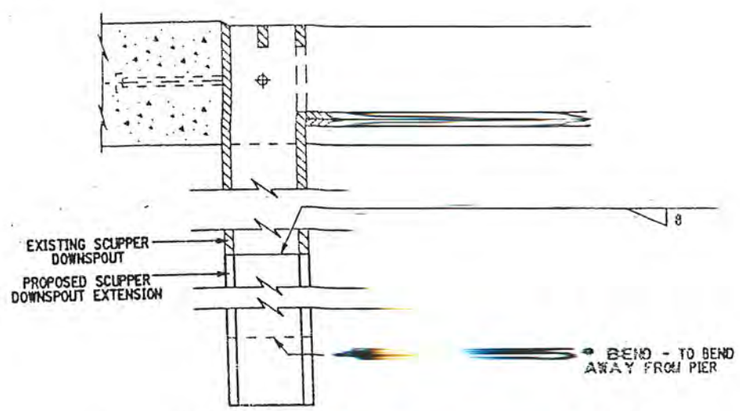

DETAIL B (PROPOSED)
NOT TO SCALE

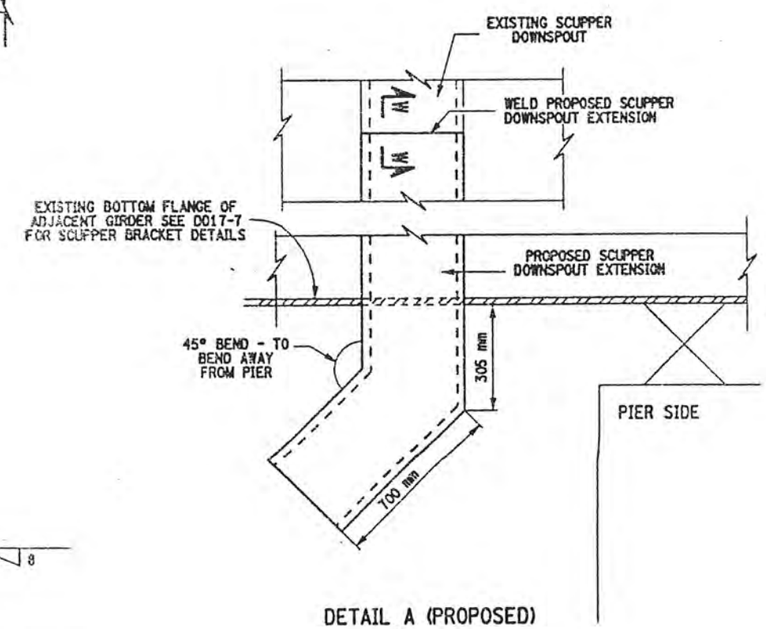

DETAIL A (PROPOSED)
NOT TO SCALE

NOTES:

1) ALL WORK AND MATERIALS NECESSARY FOR SCUPPER ADJUSTMENT AND EXTENSION SHALL BE INCLUDED IN PRICE BID FOR ITEM 590.01M.

SCUPPER LOCATION TABLE

	LOCATION	EAST CURB LINE	WEST CURB LINE
SOUTHBOUND BIN: 1093571	SOUTH SIDE OF PIER 8	1	1
	SOUTH SIDE OF PIER 10	1	—
	SOUTH SIDE OF PIER 11	1	—
	SOUTH SIDE OF PIER 12	1	—
	SOUTH SIDE OF PIER 13	1	—
	SOUTH SIDE OF PIER 14	1	—
NORTHBOUND BIN: 1093572	SOUTH SIDE OF PIER 8	1	1
	SOUTH SIDE OF PIER 9	1	1
	SOUTH SIDE OF PIER 10	1	—
	SOUTH SIDE OF PIER 11	1	—
	SOUTH SIDE OF PIER 12	1	—
	SOUTH SIDE OF PIER 13	1	—
	SOUTH SIDE OF PIER 14	1	—
TOTALS		13	3

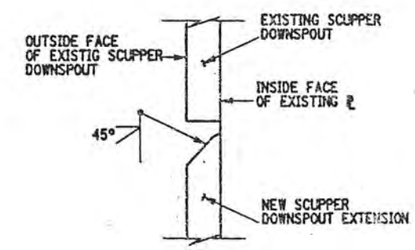

SECTION W-W
NOT TO SCALE

LIST OF ITEMS USED:

ITEM 590.01M - VERT. ADJUSTMENT OF BRIDGE DRAINAGE DEVICES (EA)

ALL DIMENSIONS ARE IN m UNLESS OTHERWISE NOTED

AS BUILT REVISIONS

SIGNATURE DATE

INTERSTATE 481 NB AND SB
OVER
CSX RAILROAD YARD
SCUPPER EXTENSIONS

STATE OF NEW YORK
DEPARTMENT OF TRANSPORTATION

FILENAME	REGION	DATE	DRAWING NO.
305613AE.DS1	3	10/02	D017-6

FED ROAD REG. NO.	STATE	CONTRACT NO.	SHEET NO.	TOTAL SHEETS
1	N.Y.	D259214	295	432

BRIDGE REHABILITATION PROJECT (ELEMENT SPECIFIC)
VARIOUS BRIDGES ON INTERSTATE 481
TOWNS OF DEWITT AND CICERO
ONONDAGA COUNTY
P.I.N. 305613 | B.I.N. 1093571 & 1093572

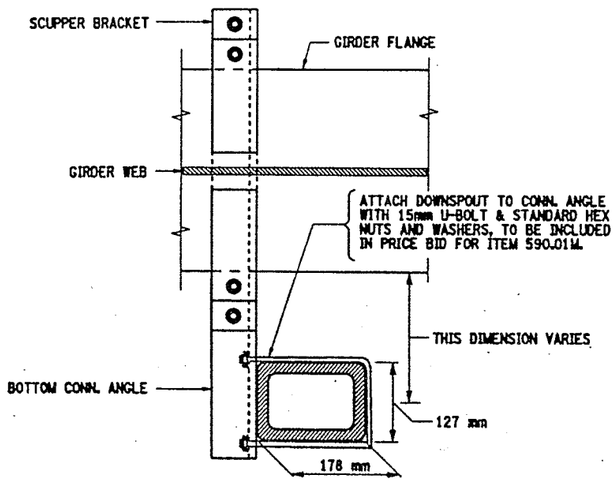

PROPOSED SCUPPER BRACKET DETAILS
PLAN VIEW

SCALE 1:10

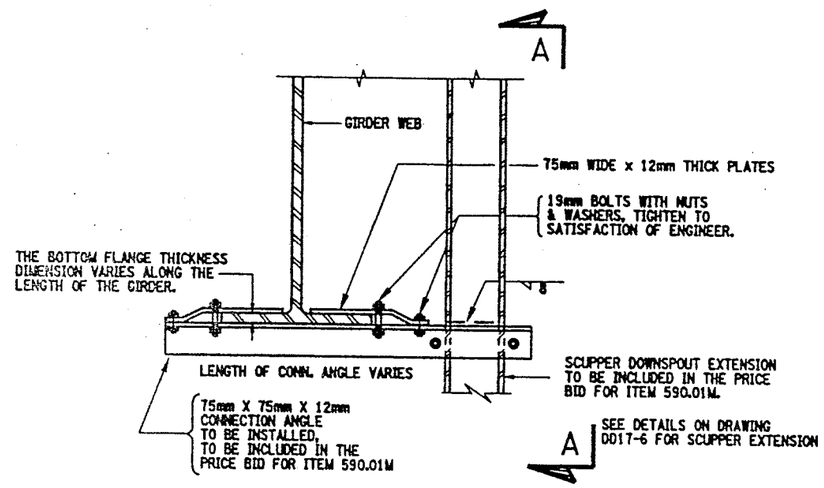

PROPOSED SCUPPER BRACKET DETAILS

SCALE 1:10

NOTES

1. AN APPROVED TYPE OF REMOVABLE DIFFUSER SHALL BE INSTALLED ON ALL OPEN-ENDED SCUPPERS, COST TO BE INCLUDE IN THE PRICE BID FOR ITEM 590.01M.
2. EVERY OPEN DRAINAGE SCUPPER DOWNSPOUT SHALL BE EXTENDED TO 305mm MINIMUM, BELOW THE BOTTOM FLANGE, COST TO BE INCLUDED IN THE PRICE BID FOR ITEM 590.01M.
3. ALL PROPOSED BRACKETS AND CONNECTION HARDWARE SHALL BE FABRICATED FROM ASTM A36M STEEL.
4. ALL PROPOSED BRACKETS SHALL BE SHOP PAINTED PRIOR TO INSTALLATION COST TO BE INCLUDED IN THE PRICE BID FOR ITEM 590.01 M (DOWNSPOUT EXCLUDED).
5. NO WELDING TO, OR CUTTING OF, OR DRILLING INTO ANY STRUCTURAL STEEL WILL BE ALLOWED.
6. SCUPPER EXTENSION SHALL BE GALVANIZED IN ACCORDANCE WITH N.Y.S. STD. SPECIFICATIONS SUBSECTION 719-01.

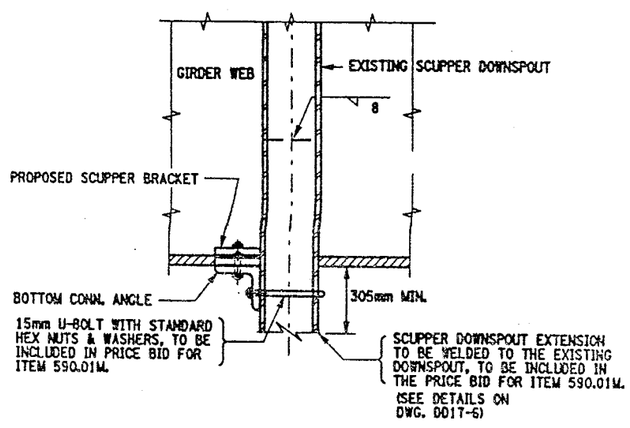

PROPOSED SCUPPER BRACKET DETAILS
SECTION A-A

SCALE 1:10

LIST OF ITEMS USED:

ITEM 590.01M - VERTICAL ADJUSTMENT OF BRIDGE DRAINAGE DEVICES (EA)

ALL DIMENSIONS ARE IN mm UNLESS OTHERWISE NOTED

AS BUILT REVISIONS

SIGNATURE | DATE

INTERSTATE 481 NB AND SB
OVER
CSX RAILROAD YARD
SCUPPER EXTENSIONS

STATE OF NEW YORK
DEPARTMENT OF TRANSPORTATION

FILENAME	REGION	DATE	DRAWING NO.
305613AE.DS1	3	10/02	D017-7

CHECKED BY
DRAFTED BY
ESTIMATED BY
CHECKED BY
DESIGNED BY
JOB MANAGER
DESIGN SUPERVISOR

FED ROAD REG. NO.	STATE	CONTRACT NO.	SHEET NO.	TOTAL SHEETS
1	N.Y.	D259214	296	432

BRIDGE REHABILITATION PROJECT (ELEMENT SPECIFIC)

VARIOUS BRIDGES ON INTERSTATE 481

TOWNS OF DEWITT AND CICERO

ONONDAGA COUNTY

P.I.N. 305613 | B.I.N. 1093571 & 1093572

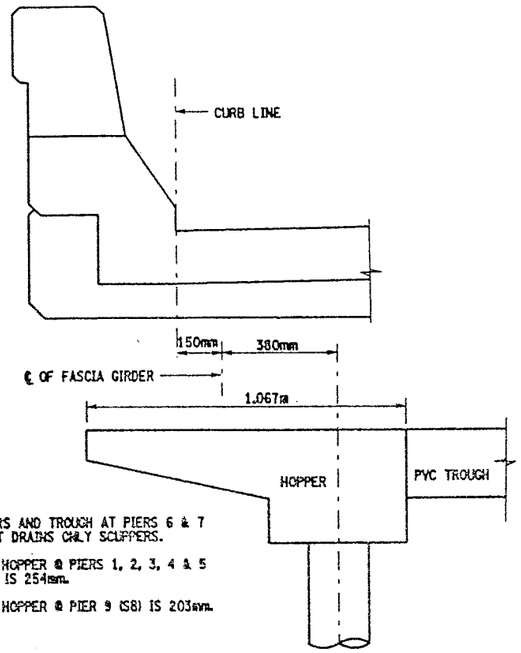

NO HOPPERS AND TROUGH AT PIERS 6 & 7 DOWNSPOUT DRAINS ONLY SCUPPERS.

WIDTH OF HOPPER @ PIERS 1, 2, 3, 4 & 5 (NB & SB) IS 254mm.

WIDTH OF HOPPER @ PIER 9 (SB) IS 203mm.

DRAINAGE SYSTEM HOPPER DETAIL
ELEVATION VIEW

NOT TO SCALE

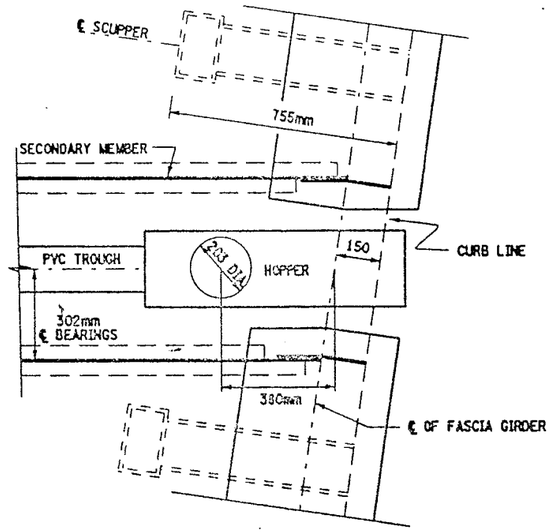

PLAN VIEW OF DRAINAGE DETAIL

NOT TO SCALE

NOTES:

SPLASH PAD & STONE FILLING TO BE PLACED AT EACH MODIFIED DOWNSPOUT LOCATION (PIER'S 2 & 3). STONE FILL SHALL BE PLACED FROM SPLASH PAD TO ℄ OF DITCH LINE.

TYPICAL WIDTH OF STONE FILLING 900mm.

PROPOSED STONE FILL SLOPE TO MATCH EXISTING SLOPE.

PLACEMENT OF SPLASH PAD AND STONE FILL SHALL INCLUDE ITEM 206.02M.

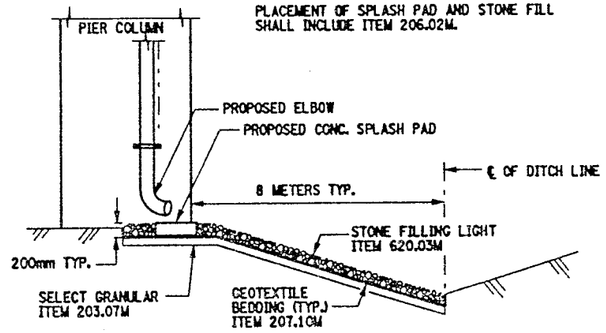

MISC. SPLASH PAD AND STONE FILL DETAIL

NOT TO SCALE

CLEAN DRAINAGE SYSTEM NOTE:

THE FOLLOWING CLOSED DRAINAGE SYSTEMS SHALL BE CLEANED UNDER THIS CONTRACT.

BIN 1093571 - PIERS 1, 2, 3, 4, 5, 6 & 9
BIN 1093572 - PIERS 1, 2, 3, 4, 5 & 6

NOTE, PIER #6 (BOTH STRUCTURES) THE TYPE OF BRIDGE JOINT IS AN ARMORED JOINT WITH COMPRESSION SEAL. THE DOWNSPOUTS ARE CONNECTED TO THE BRIDGE SCUPPERS.

THE CLEANING OF THE EXISTING DRAINAGE SYSTEM (ITEM 203.18M) SHALL BE FROM HOPPER (FASCIA GIRDER) TO HOPPER (FASCIA GIRDER) AND SHALL INCLUDE THE PVC TROUGH AND THE ENTIRE DOWNSPOUT SYSTEM (DIA. OF DOWNSPOUTS VARY) FROM HOPPERS TO OUTLET. REFER TO DWG. NO. D017-1 THRU DWG. NO. D017-4 FOR DRAINAGE DETAILS AND PROPOSED MODIFICATIONS TO PIER DOWNSPOUTS.

FOR QUANTITIES OF ITEMS SEE DRAINAGE RUN TABLE ON DRAWING NO. D017-3.

CONTRACTOR SHALL TAKE CARE WHEN PERFORMING CLEANING OPERATION NOT TO DAMAGE THE EXISTING DRAINAGE SYSTEM. ANY DAMAGE CAUSED BY CONTRACTOR'S OPERATIONS SHALL BE REPAIRED OR REPLACED AS DEEMED NECESSARY BY THE ENGINEER AT NO ADDITIONAL COST TO THE STATE.

DRAINAGE RUN TABLE ON DWG. NO. D017-3, THE DRAINAGE TROUGHS ARE DIVIDED AT MID-POINT OF PIER.

SEE ORIGINAL CONTRACT PLANS F.I.S.H. 70-7 FOR EXISTING PIER ELEVATIONS.

SEE DRAWING NO. D017-4 FOR PROPOSED PIER DOWNSPOUT DETAILS.

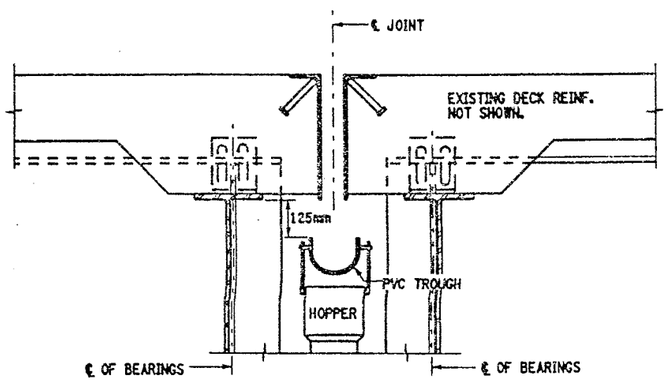

EXISTING PIER
OPEN JOINT TYPICAL

BIN 1093571 - PIERS 1, 2, 3, 4, 5 & 9
BIN 1093572 - PIERS 1, 2, 3, 4 & 5

NOT TO SCALE

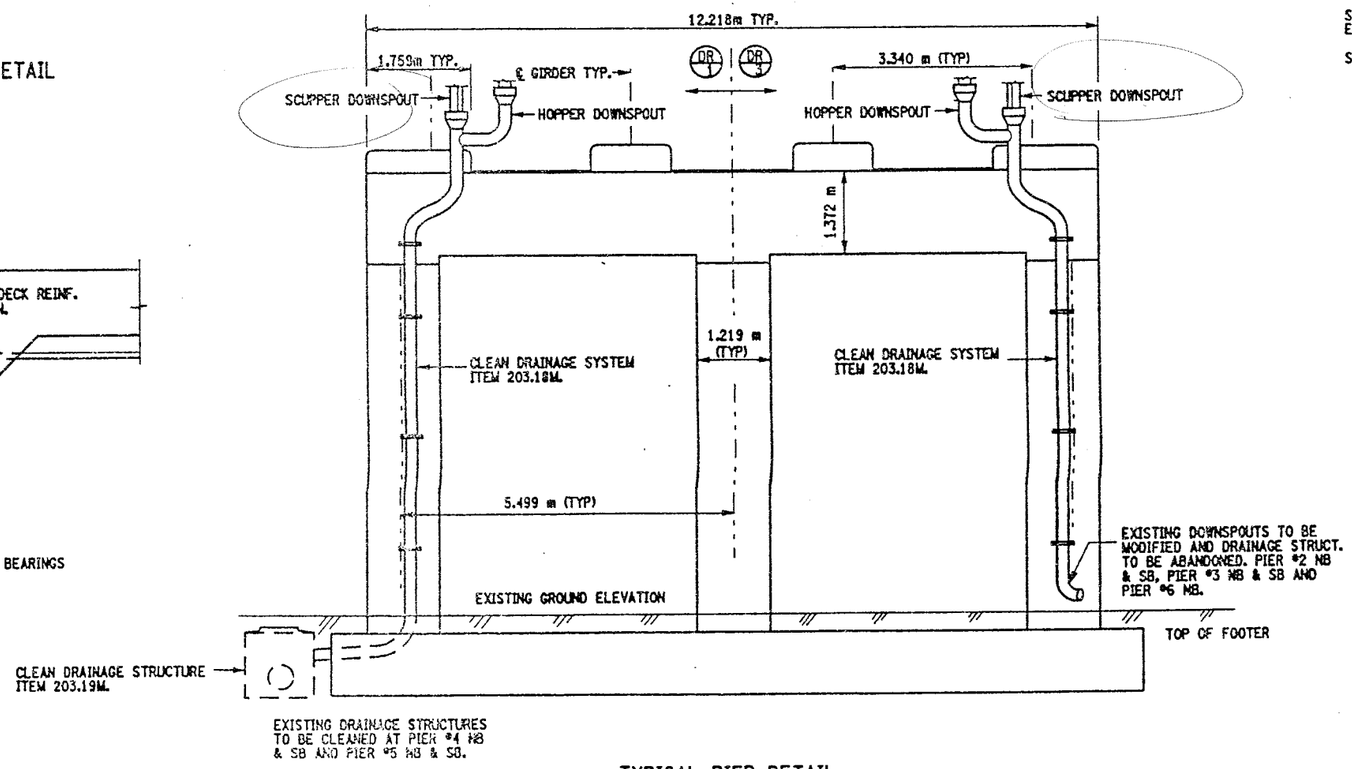

TYPICAL PIER DETAIL

NOT TO SCALE

ITEMS USED:

ITEM 203.07M - SELECT GRANULAR FILL, (CM)
ITEM 207.10M - GEOTEXILE BEDDING, (SM)
ITEM 203.18M - CLEAN CLOSED DRAINAGE SYSTEMS (LF)
ITEM 203.19M - CLEAN DRAINAGE STRUCTURES & MANHOLES (EA)
ITEM 620.03M - STONE FILL, LIGHT, (CM)

ALL DIMENSIONS ARE IN mm UNLESS OTHERWISE NOTED

AS BUILT REVISIONS

SIGNATURE | DATE

INTERSTATE 481 OVER CSX RR YARD

DRAINAGE CLEANING DETAILS

STATE OF NEW YORK
DEPARTMENT OF TRANSPORTATION

FILENAME	REGION	DATE	DRAWING NO.
305613AE.DS1	3	10/02	D017-8

DESIGN SUPERVISOR ____ JOB MANAGER ____ DESIGNED BY ____ CHECKED BY ____ DRAFTED BY ____ CHECKED BY ____ ESTIMATED BY ____

FED ROAD REG. NO.	STATE	CONTRACT NO.	SHEET NO.	TOTAL SHEETS
1	N.Y.	D259214	297	432

BRIDGE REHABILITATION PROJECT (ELEMENT SPECIFIC)
VARIOUS BRIDGES ON INTERSTATE 481
TOWNS OF DEWITT AND CICERO
ONONDAGA COUNTY
P.I.N. 305613 B.I.N. 1093571

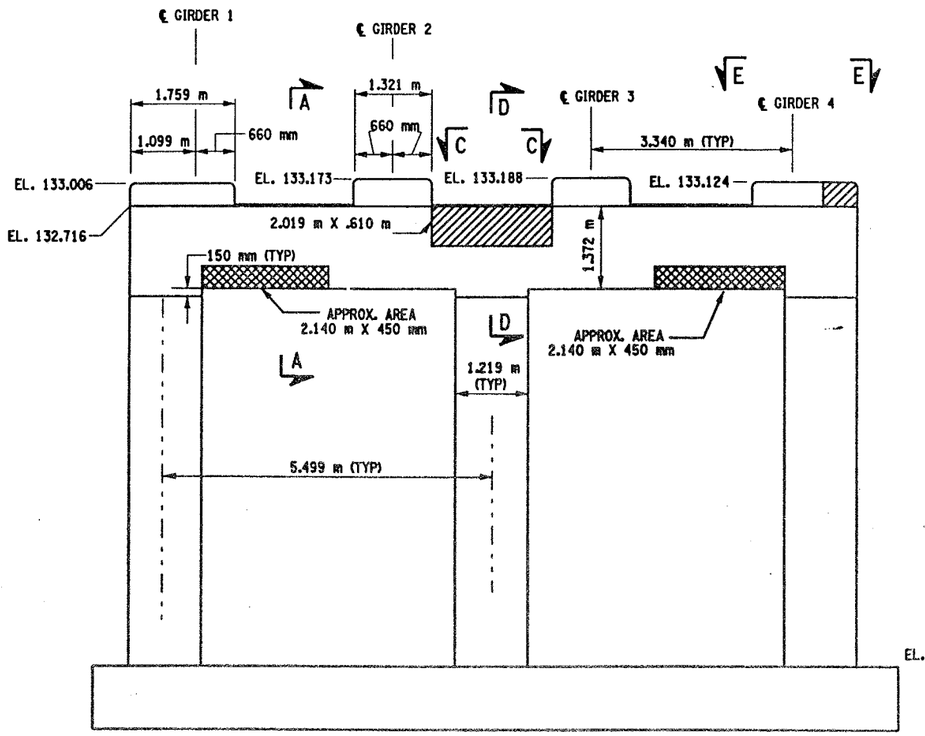

PIER 1 - FRONT FACE (LOOKING NORTH)
BIN 1093571
SCALE: 1 TO 50

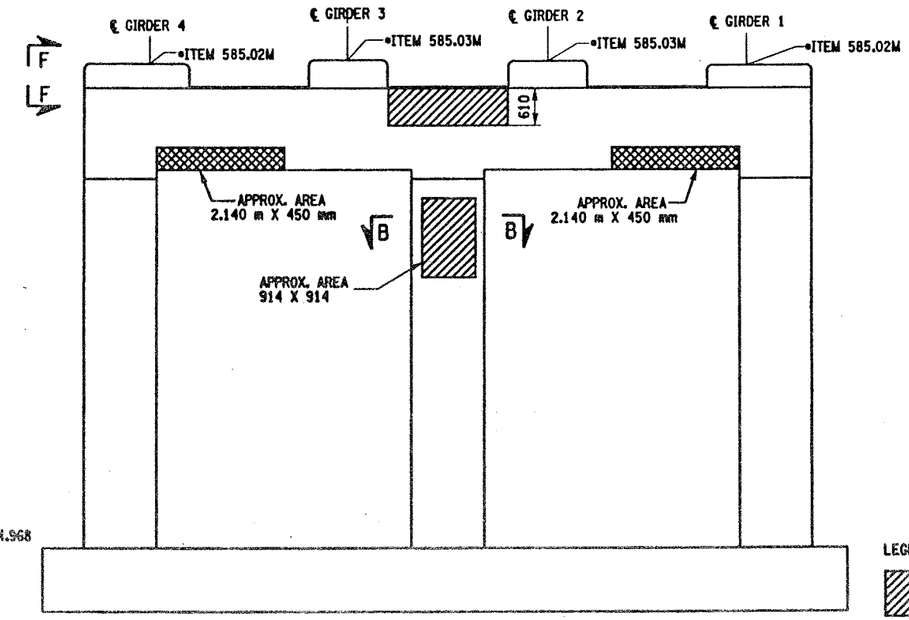

PIER 1- BACK FACE (LOOKING SOUTH)
BIN 1093571
SCALE: 1 TO 50

NOTES:

1. ALL REINFORCEMENT TO REMAIN.
2. RESTORE TO ORIGINAL DIMENSIONS.
3. PEDESTALS NUMERICALLY NUMBERED FROM WEST TO EAST.
4. FOR THE CONCRETE REPAIR AREAS, THE CONCRETE SHALL BE REMOVED TO AT LEAST 40mm MIN. BEYOND THE ENCOUNTERED REINFORCEMENT AND TO SOUND CONCRETE, A.O.B.E.
5. ELEVATIONS SHOWN ARE FROM ORIGINAL CONTRACT PLANS F.I.S.H. 70-7 AND ARE FOR REFERENCE ONLY.
6. REMOVAL DIMENSIONS SHOWN ON PLANS ARE ESTIMATED AND SHALL BE FIELD VERIFIED BY THE CONTRACTOR PRIOR TO BEGINNING OF REMOVAL OPERATIONS A.O.B.E.
7. PERFORM BEARING RESTORATION TO ALL EXPANSION BEARINGS (TO INCLUDE RESETTING OF UNDEREXTENDED OR OVEREXTENDED BEARINGS). SEE DWG. BR-10 & BR-11 FOR BEARING RESTORATION DETAILS.
8. SEE DWG. PR17-2S FOR SECTIONS A-A, B-B, D-D, E-E AND F-F.
9. ALL CONCRETE REMOVAL SHALL BE SAWCUT TO PRODUCE NEAT REMOVAL LINES. COST TO BE INCLUDED IN THE PRICE BID FOR ITEM 582.05M AND ITEM 582.07M.
10. CONTRACTOR SHALL REMOVE DEBRIS FROM TOP OF PEDESTALS AND TOP OF CAP BEAM. COST TO BE INCLUDED IN THE PRICE BID FOR VARIOUS OTHER ITEMS OF CONTRACT.

LEGEND:

ITEM 582.05M - REMOVAL OF STRUCTURAL CONCRETE- REPLACE WITH CLASS A CONCRETE. (CM)

ITEM 582.07M - REMOVAL OF STRUCTURAL CONCRETE - REPLACE WITH VERTICAL OVER-HEAD PATCH MATERIAL. (SM)

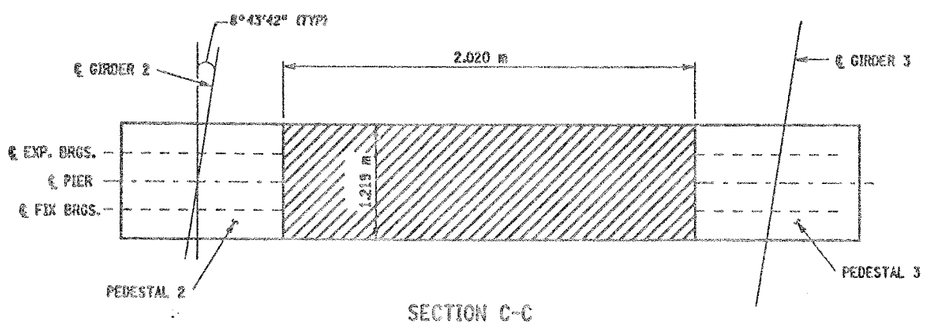

SECTION C-C
NOT TO SCALE

JACKING NOTES:

THE METHOD OF LIFTING SHALL BE APPROVED BY THE DEPUTY CHEIF ENGINEER (STRUCTURES), DSES, TWO WEEKS PRIOR TO THE START OF THE WORK.

NO LIFTING WILL BE ALLOWED UNTIL ALL TEMPORARY SUPPORTS ARE SECURED.

WHEN POSSIBLE, THERE WILL BE NO LIVE LOAD DURING LIFTING.

LIFTING SHALL BE CONFINED TO ONE END OF A SPAN AT ANY ONE TIME.

IF THE CONTRACTOR ELECTS TO LIFT ONLY ONE GIRDER AT A TIME PER PIER (TO A MAXIMUM OF 3 mm TO REMOVE LOAD FROM BEARING), NO VEHICULAR TRAFFIC RESTRICTIONS WILL BE REQUIRED AS STATED IN THE SPECIFICATION SECTION 585-STRUCTURAL LIFTING OPERATIONS.

WHERE THE CONTRACTOR IS REQUIRED TO PERFORM BEARING RESTORATION (SEE BR-11) AS WELL AS CONCRETE REPAIRS REQUIRING STRUCTURAL LIFTING, ONLY ONE STRUCTURAL LIFTING PAYMENT WILL BE MADE.

• PERFORM STRUCTURAL LIFTING UNDER ITEM 585.02M - STRUCTURAL LIFTING OPERATIONS - TYPE B (LIFTING AT A PIER) OR ITEM 585.03M - STRUCTURAL LIFTING OPERATIONS - TYPE C (LIFTING AT A PIER WHERE THE CONTRACTOR SHALL BE REQUIRED TO LIFT OFF THE FOOTING AND/OR GROUND LEVEL.

JACKING LOADS:

D.L. = 75 MT
L.L. = 50 MT
TOTAL = 125 MT

BRIDGE BEARING RESTORATION NOTES:

1. BRIDGE BEARING RESTORATION ITEM 15565.4302M SHALL INCLUDE ALL DESIGNATED WORK AS PER THE SPECIFICATION.
2. STRUCTURAL LIFTING SHALL BE USED WITH ALL EXPANSION BEARING RESTORATION.
3. IF THE CONTRACTOR ELECTS TO LIFT ONLY ONE GIRDER AT A TIME PER SPAN (TO A MAXIMUM OF 3 mm TO REMOVE LOAD FROM BEARINGS), NO VEHICULAR TRAFFIC RESTRICTIONS WILL BE REQUIRED AS STATED IN SPECIFICATIONS SECTON 585-STRUCTURAL LIFTING OPERATIONS.
4. BEARING RESTORATION SHALL AS A MINIMUM, AND IN ALL CASES INCLUDE REPLACEMENT OF BRONZE PLATE.
5. FIXED BEARING TO BE CLEANED IN PLACE. DO NOT DISASSEMBLE.

LIST OF ITEMS USED:

ITEM 15565.4302M	- BRIDGE BEARING RESTORATION (EA)
ITEM 582.05M	- REMOVAL OF STRUCTURAL CONCRETE - REPLACE WITH CLASS A CONCRETE (CM)
ITEM 582.07M	- REMOVAL OF STRUCTURAL CONCRETE - REPLACE WITH VERTICAL OVERHEAD PATCH MATERIAL (SM)
ITEM 585.02M	- STRUCTURAL LIFTING OPERATIONS - TYPE B (EA)
ITEM 585.03M	- STRUCTURAL LIFTING OPERATION - TYPE C (EA)

ALL DIMENSIONS ARE IN mm UNLESS OTHERWISE NOTED

AS BUILT REVISIONS

SIGNATURE DATE

INTERSTATE 481 SB
OVER
CSX RAILROAD YARD
PIER 1

STATE OF NEW YORK
DEPARTMENT OF TRANSPORTATION

FILENAME	REGION	DATE	DRAWING NO.
305613AE.P1A	3	10/02	PR17-1S

DESIGN SUPERVISOR ____ JOB MANAGER ____ DESIGNED BY ____ CHECKED BY ____ DRAFTED BY ____ ESTIMATED BY ____ CHECKED BY ____

FED ROAD REG. NO.	STATE	CONTRACT NO.	SHEET NO.	TOTAL SHEETS
1	N.Y.	D259214	298	432

BRIDGE REHABILITATION PROJECT (ELEMENT SPECIFIC)

VARIOUS BRIDGES ON INTERSTATE 481

TOWNS OF DEWITT AND CICERO

ONONDAGA COUNTY

P.I.N. 305613 | B.I.N. 1093571

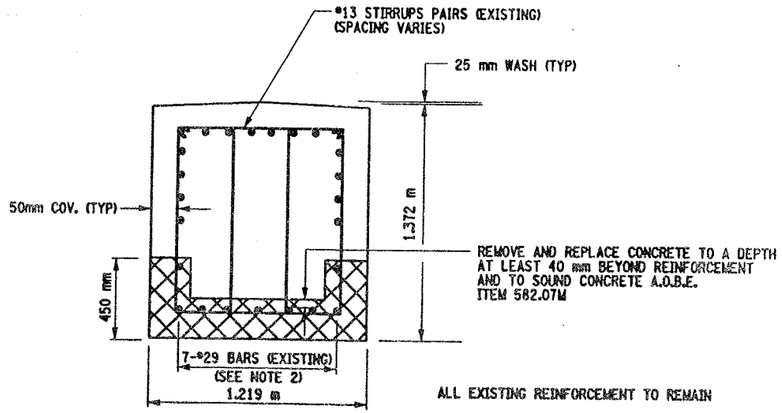

SECTION A-A

NOT TO SCALE

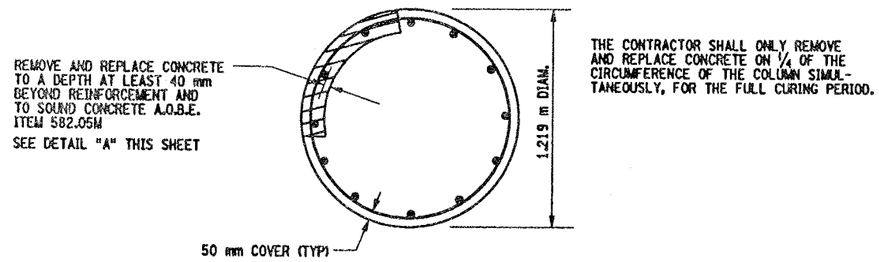

THE CONTRACTOR SHALL ONLY REMOVE AND REPLACE CONCRETE ON 1/4 OF THE CIRCUMFERENCE OF THE COLUMN SIMULTANEOUSLY, FOR THE FULL CURING PERIOD.

SECTION B-B

NOT TO SCALE

NOTES:

1. ALL CONCRETE REMOVAL OPERATIONS SHALL INCLUDE SAW CUTTING TO PRODUCE NEAT REMOVAL LINES. COST TO BE INCLUDED IN PRICE BID FOR THE APPROPRIATE REMOVAL ITEM.
2. THE REINFORCEMENT SHOWN IS TYPICAL FOR PIER #1. THE NUMBER AND OR SIZE OF REINFORCEMENT IN OTHER PIERS MAY VARY.
3. CONTRACTOR SHALL REMOVE DEBRIS FROM TOP OF PEDESTALS AND TOP OF CAP BEAM. COST TO BE INCLUDED IN THE PRICE BID FOR VARIOUS OTHER ITEMS OF CONTRACT.
4. CONTRACTOR SHALL REMOVE DEBRIS FROM TOP OF PEDESTALS AND TOP OF CAP BEAM. COST TO BE INCLUDED IN THE PRICE BID FOR VARIOUS OTHER ITEMS OF CONTRACT.

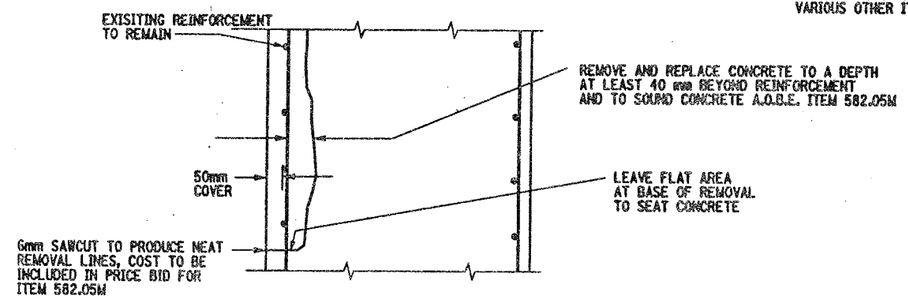

DETAIL "A"

NOT TO SCALE

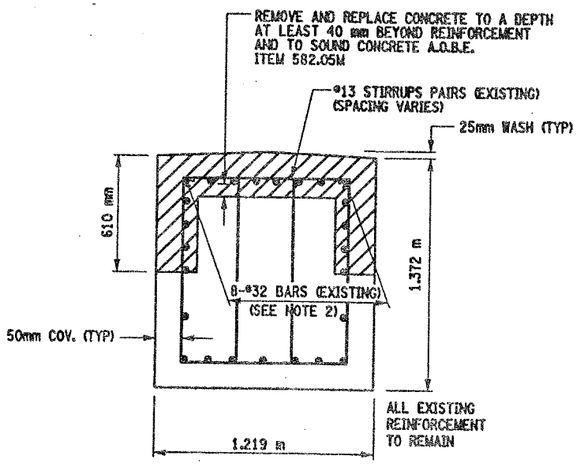

SECTION D-D

NOT TO SCALE

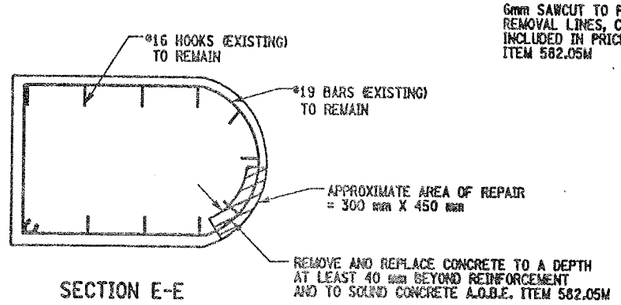

SECTION E-E

NOT TO SCALE

LEGEND:

ITEM 582.05M - REMOVAL OF STRUCTURAL CONCRETE- REPLACE WITH CLASS A CONCRETE. (CM)

ITEM 582.07M - REMOVAL OF STRUCTURAL CONCRETE - REPLACE WITH VERTICAL OVERHEAD PATCH MATERIAL. (SM)

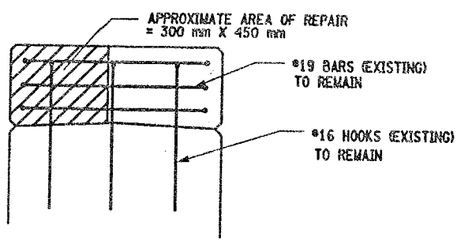

SECTION F-F

NOT TO SCALE

LIST OF ITEMS USED:

ITEM 582.05M - REM. OF STRUC. CONC. - REPLACE WITH CLASS A CONCRETE (CM)
ITEM 582.07M - REM. OF STRUC. CONC. - REPL. W/ VERT. OVERHEAD PATCH MAT'L (SM)

ALL DIMENSIONS ARE IN mm UNLESS OTHERWISE NOTED

AS BUILT REVISIONS

SIGNATURE | DATE

INTERSTATE 481 SB
OVER
CSX RAILROAD YARD
PIER 1

STATE OF NEW YORK
DEPARTMENT OF TRANSPORTATION

FILENAME	REGION	DATE	DRAWING NO.
305613AE.P1A	3	10/02	PR17-2S

DESIGN SUPERVISOR ____ JOB MANAGER ____ DESIGNED BY ____ CHECKED BY ____ DRAFTED BY ____ CHECKED BY ____ ESTIMATED BY ____

FED ROAD REG. NO.	STATE	CONTRACT NO.	SHEET NO.	TOTAL SHEETS
1	N.Y.	D259214	299	432

BRIDGE REHABILITATION PROJECT (ELEMENT SPECIFIC)
VARIOUS BRIDGES ON INTERSTATE 481
TOWNS OF DEWITT AND CICERO
ONONDAGA COUNTY
P.I.N. 305613 B.I.N. 1093571

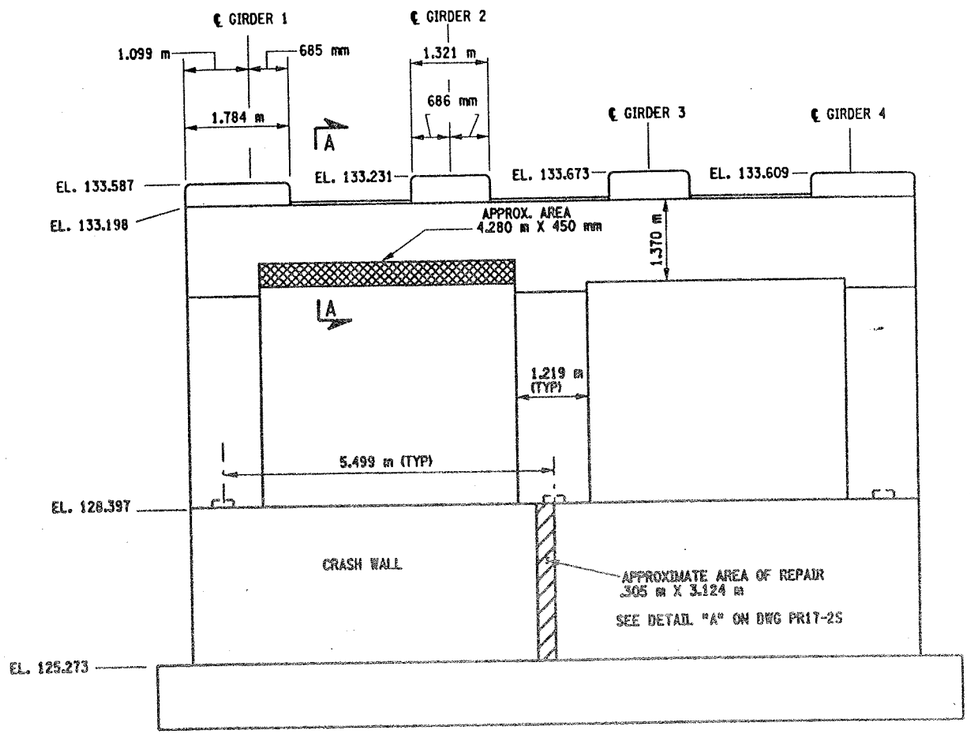

PIER 2 - FRONT FACE (LOOKING NORTH)
BIN 1093571
SCALE: 1 TO 50

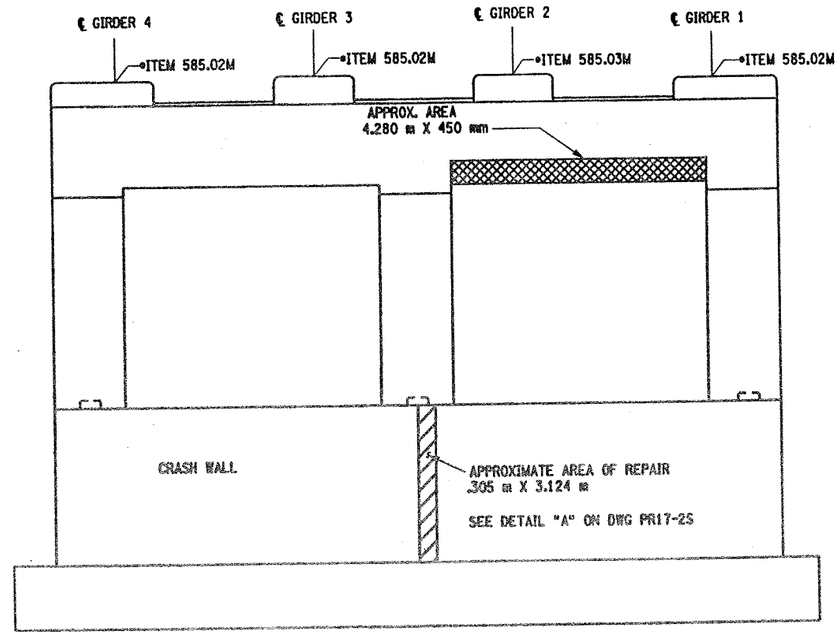

PIER 2- BACK FACE (LOOKING SOUTH)
BIN 1093571
SCALE: 1 TO 50

NOTES:

1. ALL REINFORCEMENT TO REMAIN.
2. RESTORE TO ORIGINAL DIMENSIONS.
3. PEDESTALS NUMERICALLY NUMBERED FROM WEST TO EAST.
4. FOR THE CONCRETE REPAIR AREAS, THE CONCRETE SHALL BE REMOVED TO AT LEAST 40mm MIN. BEYOND THE ENCOUNTERED REINFORCEMENT AND TO SOUND CONCRETE, A.O.B.E.
5. ELEVATIONS SHOWN ARE FROM ORIGINAL CONTRACT PLANS F.I.S.H. 70-7 AND ARE FOR REFERENCE ONLY.
6. REMOVAL DIMENSIONS SHOWN ON PLANS ARE ESTIMATED AND SHALL BE FIELD VERIFIED BY THE CONTRACTOR PRIOR TO BEGINNING OF REMOVAL OPERATIONS A.O.B.E.
7. PERFORM BEARING RESTORATION TO ALL EXPANSION BEARINGS (TO INCLUDE RESETTING OF UNDEREXTENDED OR OVEREXTENDED BEARINGS), SEE DWG. BR-10 & BR-11 FOR BEARING RESTORATION DETAILS. SEE DWG. PR17-1S FOR BEARING RESTORATION NOTES.
8. SEE DWG. PR17-2S FOR SECTION A-A AND DETAIL "A".
9. ALL CONCRETE REMOVAL SHALL BE SAWCUT TO PRODUCE NEAT REMOVAL LINES. COST TO BE INCLUDED IN THE PRICE BID FOR ITEM 582.05M AND ITEM 582.07M.
10. FOR JACKING NOTES SEE DWG. PR17-1S
11. CONTRACTOR WHALL REMOVE DEBRIS FROM TOP OF PEDESTALS AND TOP OF CAP BEAM. COST TO BE INCLUDED IN THE PRICE BE FOR VARIOUS OTHER ITEMS OF CONTRACT.

• PERFORM STRUCTURAL LIFTING UNDER ITEM 585.02M - STRUCTURAL LIFTING OPERATIONS - TYPE B (LIFTING AT A PIER) OR ITEM 585.03M - STRUCTURAL LIFTING OPERATIONS - TYPE C (LIFTING AT A PIER WHERE THE CONTRACTOR SHALL BE REQUIRED TO LIFT OFF THE FOOTING AND/OR GROUND LEVEL.

JACKING LOADS:

D.L. = 75 MT
L.L. = 50 MT
TOTAL = 125 MT

LEGEND:

ITEM 582.05M - REMOVAL OF STRUCTURAL CONCRETE- REPLACE WITH CLASS A CONCRETE (CM)

ITEM 582.07M - REMOVAL OF STRUCTURAL CONCRETE - REPLACE WITH VERTICAL OVER-HEAD PATCH MATERIAL. (SM)

LIST OF ITEMS USED

ITEM 15565.4302M - BRIDGE BEARING RESTORATION (EA)
ITEM 582.05M - REM. OF STRUC. CONC. - REPLACE WITH CLASS A CONCRETE (CM)
ITEM 582.07M - REM. OF STRUC. CONC. - REPL. W/ VERT. OVERHEAD PATCH MAT'L (SM)
ITEM 585.02M - STRUCTURAL LIFTING OPERATIONS - TYPE B (EA)
ITEM 585.03M - STRUCTURAL LIFTING OPERATION - TYPE C (EA)

ALL DIMENSIONS ARE IN mm UNLESS OTHERWISE NOTED

AS BUILT REVISIONS

SIGNATURE DATE

INTERSTATE 481 SB
OVER
CSX RAILROAD YARD
PIER 2

STATE OF NEW YORK
DEPARTMENT OF TRANSPORTATION

FILENAME	REGION	DATE	DRAWING NO.
305613AEJP2A	3	10/02	PR17-3S

DESIGN SUPERVISOR ____ JOB MANAGER ____ DESIGNED BY ____ CHECKED BY ____ ESTIMATED BY ____ DRAFTED BY ____ CHECKED BY ____

FED ROAD REG. NO.	STATE	CONTRACT NO.	SHEET NO.	TOTAL SHEETS
1	N.Y.	D259214	300	432

BRIDGE REHABILITATION PROJECT (ELEMENT SPECIFIC)
VARIOUS BRIDGES ON INTERSTATE 481
TOWNS OF DEWITT AND CICERO
ONONDAGA COUNTY
P.I.N. 305613 | B.I.N. 1093571

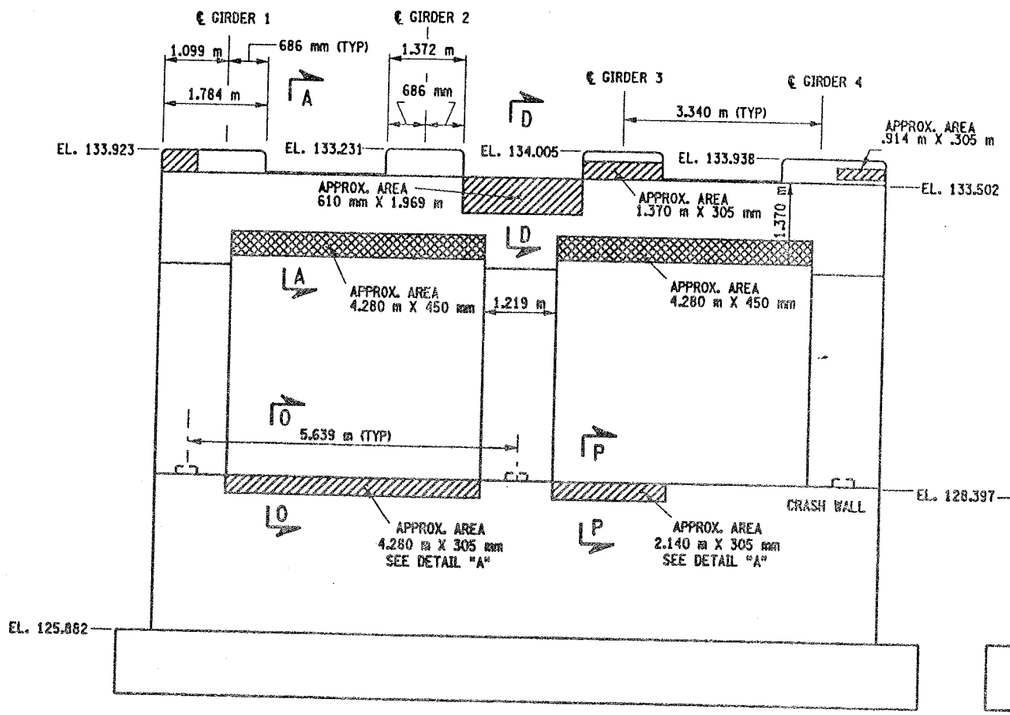

PIER 3 - FRONT FACE (LOOKING NORTH)

BIN 1093571

SCALE: 1 TO 50

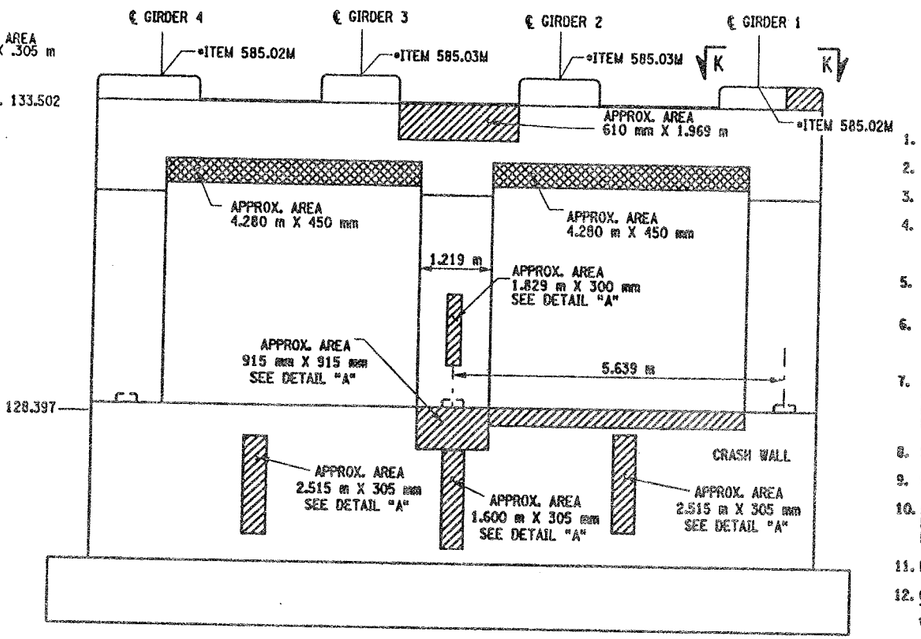

PIER 3 - BACK FACE (LOOKING SOUTH)

BIN 1093571

SCALE: 1 TO 50

NOTES:

1. ALL REINFORCEMENT TO REMAIN.
2. RESTORE TO ORIGINAL DIMENSIONS.
3. PEDESTALS NUMERICALLY NUMBERED FROM WEST TO EAST.
4. FOR THE CONCRETE REPAIR AREAS, THE CONCRETE SHALL BE REMOVED TO AT LEAST 40mm MIN. BEYOND THE ENCOUNTERED REINFORCEMENT AND TO SOUND CONCRETE, A.O.B.E.
5. ELEVATIONS SHOWN ARE FROM ORIGINAL CONTRACT PLANS F.I.S.H. 70-7 AND ARE FOR REFERENCE ONLY.
6. REMOVAL DIMENSIONS SHOWN ON PLANS ARE ESTIMATED AND SHALL BE FIELD VERIFIED BY THE CONTRACTOR PRIOR TO BEGINNING OF REMOVAL OPERATIONS A.O.B.E.
7. PERFORM BEARING RESTORATION TO ALL EXPANSION BEARINGS (TO INCLUDE RESETTING OF UNDEREXTENDED OR OVEREXTENDED BEARINGS). SEE DWG BR-10 & BR-11 FOR BEARING RESTORATION DETAILS. SEE DWG. PR17-1S FOR BEARING RESTORATION NOTES.
8. SEE DWG. PR17-2S FOR SECTIONS A-A, D-D AND DETAIL "A".
9. SEE DWG. PR17-2N FOR SECTION K-K.
10. ALL CONCRETE REMOVAL SHALL BE SAWCUT TO PRODUCE NEAT REMOVAL LINES. COST TO BE INCLUDED IN THE PRICE BID FOR ITEM 582.05M AND ITEM 582.07M.
11. FOR JACKING NOTES SEE DWG. PR17-1S.
12. CONTRACTOR SHALL REMOVE DEBRIS FROM TOP OF PEDISTALS AND TOP OF CAPBEAM. COST TO BE INCLUDED IN THE PRICE BID FOR VARIOUS OTHER ITEMS OF CONTRACT.

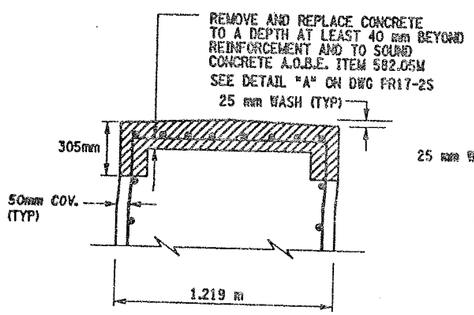

ALL EXISTING REINFORCEMENT TO REMAIN

SECTION O-O

NOT TO SCALE

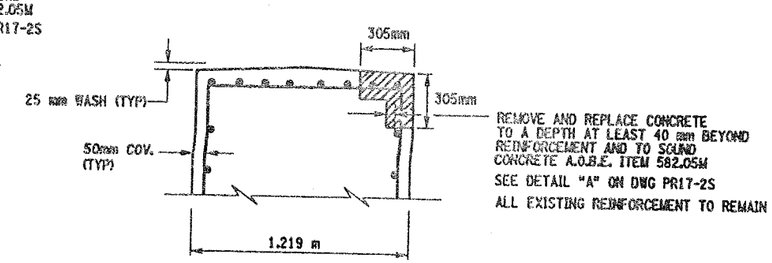

SECTION P-P

NOT TO SCALE

• PERFORM STRUCTURAL LIFTING UNDER ITEM 585.02M - STRUCTURAL LIFTING OPERATIONS - TYPE B (LIFTING AT A PIER) OR ITEM 585.03M - STRUCTURAL LIFTING OPERATIONS - TYPE C (LIFTING AT A PIER WHERE THE CONTRACTOR SHALL BE REQUIRED TO LIFT OFF THE FOOTING AND/OR GROUND LEVEL.

JACKING LOADS:

D.L. = 100 MT
L.L. = 50 MT
TOTAL = 150 MT

LEGEND:

ITEM 582.05M - REMOVAL OF STRUCTURAL CONCRETE- REPLACE WITH CLASS A CONCRETE (CM)

ITEM 582.07M - REMOVAL OF STRUCTURAL CONCRETE - REPLACE WITH VERTICAL OVERHEAD PATCH MATERIAL. (SM)

LIST OF ITEMS USED:

ITEM 15565.4302M - BRIDGE BEARING RESTORATION (EA)
ITEM 582.05M - REM. OF STRUC. CONC. - REPLACE WITH CLASS A CONCRETE (CM)
ITEM 582.07M - REM. OF STRUC. CONC. - REPL. W/ VERT. OVERHEAD PATCH MAT'L (SM)
ITEM 585.02M - STRUCTURAL LIFTING OPERATIONS - TYPE B (EA)
ITEM 585.03M - STRUCTURAL LIFTING OPERATION - TYPE C (EA)

ALL DIMENSIONS ARE IN mm UNLESS OTHERWISE NOTED

AS BUILT REVISIONS

SIGNATURE | DATE

INTERSTATE 481 SB
OVER
CSX RAIROAD YARD
PIER 3

STATE OF NEW YORK
DEPARTMENT OF TRANSPORTATION

FILENAME	REGION	DATE	DRAWING NO.
305613AE.P3A	3	10/02	PR17-4S

DESIGN SUPERVISOR ____ JOB MANAGER ____ DESIGNED BY ____ CHECKED BY ____ ESTIMATED BY ____ DRAFTED BY ____ CHECKED BY ____

FED ROAD REG. NO.	STATE	CONTRACT NO.	SHEET NO.	TOTAL SHEETS
1	N.Y.	D259214	301	432

BRIDGE REHABILITATION PROJECT (ELEMENT SPECIFIC)
VARIOUS BRIDGES ON INTERSTATE 481
TOWNS OF DEWITT AND CICERO
ONONDAGA COUNTY
P.I.N. 305613 B.I.N. 1093571

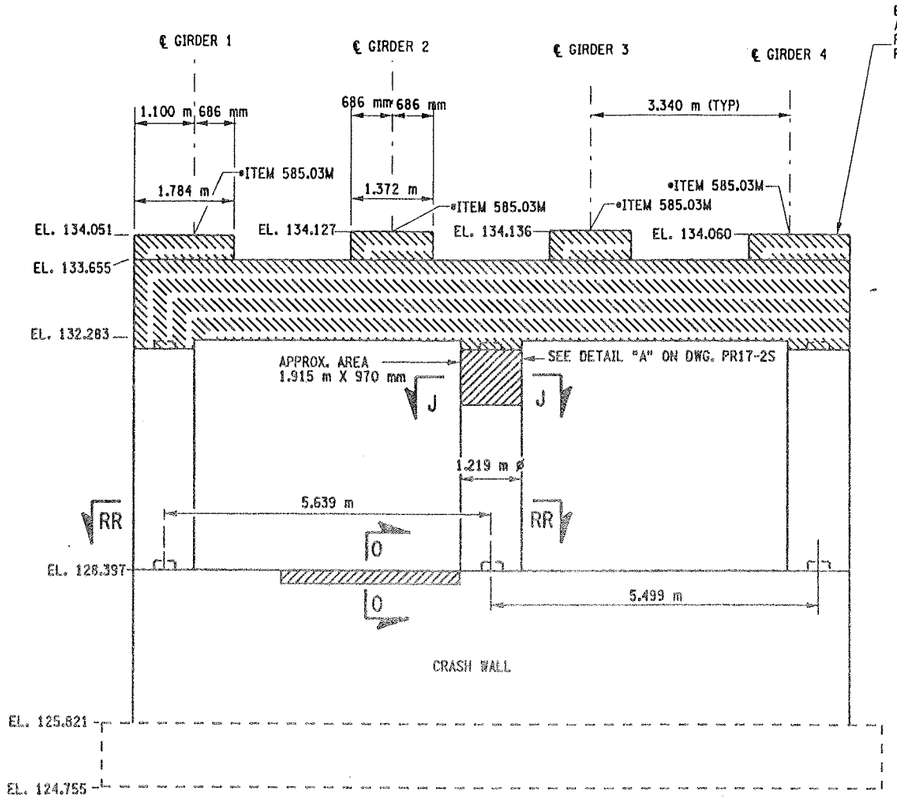

PIER 4 - FRONT FACE (LOOKING NORTH)
BIN 1093571 REMOVAL
SCALE: 1 TO 50

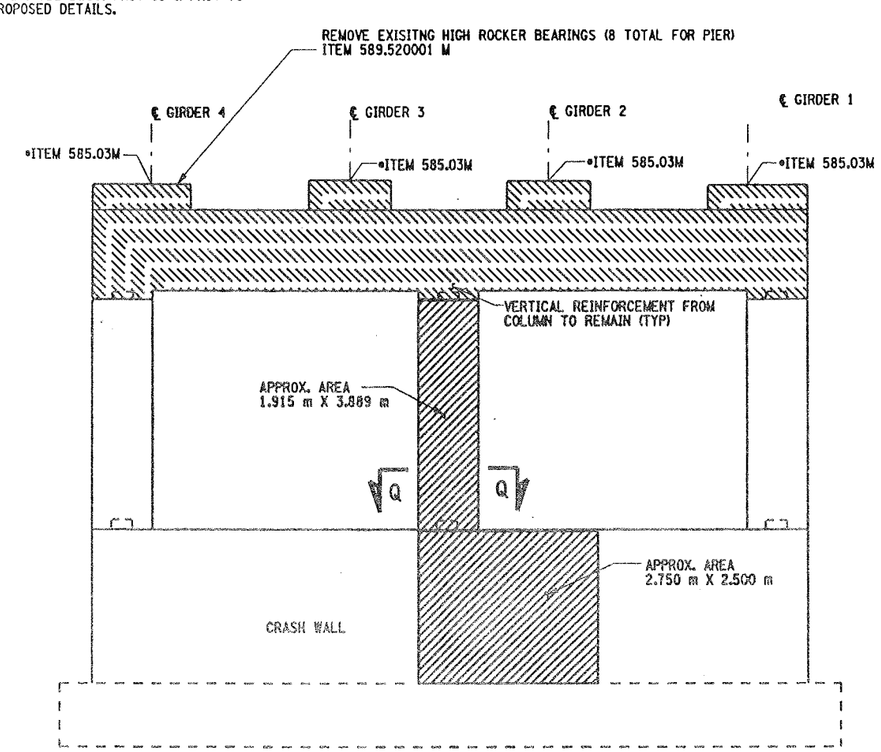

PIER 4 - BACKFACE (LOOKING SOUTH)
BIN 1093571 REMOVAL
SCALE: 1 TO 50

NOTES:

1. ALL REINFORCEMENT TO REMAIN, (EXCEPT PEDESTAL REINFORCEMENT AND CAPBEAM REINFORCEMENT). THE VERTICAL REINFORCEMENT IN THE CAPBEAMS-ORIGINATING FROM THE COLUMNS SHALL REMAIN.
2. PEDESTALS NUMERICALLY NUMBERED FROM WEST TO EAST.
3. FOR THE CONCRETE REPAIR AREAS, THE CONCRETE SHALL BE REMOVED TO AT LEAST 40mm MIN. BEYOND THE ENCOUNTERED REINFORCEMENT AND TO SOUND CONCRETE, A.O.B.E.
4. ELEVATIONS SHOWN ARE FROM ORIGINAL CONTRACT PLANS F.I.S.H. 70-7 AND ARE FOR REFERENCE ONLY.
5. REMOVAL DIMENSIONS SHOWN ON PLANS ARE ESTIMATED AND SHALL BE FIELD VERIFIED BY THE CONTRACTOR AND ENGINEER PRIOR TO BEGINNING OF REMOVAL OPERATIONS A.O.B.E.
6. SEE DWG. PR17-4N FOR SECTION Q-Q.
7. SEE DWG. PR17-2N FOR SECTION J-J.
8. SEE DWG. PR17-4S FOR SECTION O-O.
9. ALL CONCRETE REMOVAL SHALL BE SAWCUT TO PRODUCE NEAT REMOVAL LINES. COST TO BE INCLUDED IN THE PRICE BID FOR ITEM 582.05M AND ITEM 582.07M.
10. FOR JACKING NOTES SEE DWG. PR17-1S
11. CONTRACTOR SHALL REMOVE DEBRIS FROM TOP OF PEDESTALS AND TOP OF CAP BEAM. COST TO BE INCLUDED IN THE PRICE BID FOR VARIOUS OTHER ITEMS OF CONTRACT.
12. SEE BR-1 AND BR-2 FOR BEARING TABLE AND BEARING DETAILS.

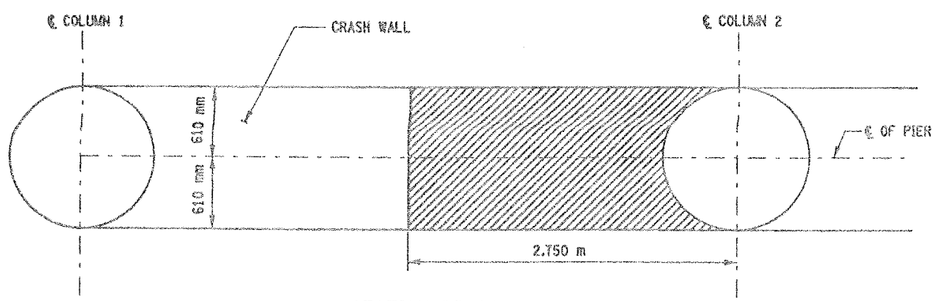

SECTION RR-RR
SCALE 1:25

• PERFORM STRUCTURAL LIFTING UNDER ITEM 585.02M - STRUCTURAL LIFTING OPERATIONS - TYPE B (LIFTING AT A PIER) OR ITEM 585.03M - STRUCTURAL LIFTING OPERATIONS - TYPE C (LIFTING AT A PIER WHERE THE CONTRACTOR SHALL BE REQUIRED TO LIFT OFF THE FOOTING AND/OR GROUND LEVEL.

JACKING LOADS:

D.L. = 100 MT
L.L. = 50 MT
TOTAL = 150 MT

LIST OF ITEMS USED:

ITEM 580.01M - REMOVAL OF STRUCTURAL CONCRETE (CM)
ITEM 582.05M - REM. OF STRUC. CONC. - REPLACE WITH CLASS A CONCRETE (CM)
ITEM 585.03M - STRUCTURAL LIFTING OPERATION - TYPE C (EA)
ITEM 589.520001M - REMOVAL OF EXISTING STEEL (EA)

LEGEND:

REPAIR: ITEM 582.05M - REMOVAL OF STRUCTURAL CONCRETE- REPLACE WITH CLASS A CONCRETE (CM)

REPLACEMENT: ITEM 580.01M - REMOVAL OF STRUCTURAL CONCRETE - (CM) (COMPLETE REMOVAL)

ALL DIMENSIONS ARE IN mm UNLESS OTHERWISE NOTED

AS BUILT REVISIONS

SIGNATURE DATE

INTERSTATE 481 SB
OVER
CSX RAILROAD YARD
PIER 4
REMOVAL DETAILS

STATE OF NEW YORK
DEPARTMENT OF TRANSPORTATION

FILENAME	REGION	DATE	DRAWING NO.
305613AE.P4A	3	10/02	PR17-5S

CHECKED BY
DRAFTED BY
ESTIMATED BY
CHECKED BY
DESIGNED BY
JOB MANAGER
DESIGN SUPERVISOR

FED ROAD REG. NO.	STATE	CONTRACT NO.	SHEET NO.	TOTAL SHEETS
1	N.Y.	D259214	302	432

BRIDGE REHABILITATION PROJECT (ELEMENT SPECIFIC)
VARIOUS BRIDGES ON INTERSTATE 481
TOWNS OF DEWITT AND CICERO
COUNTY OF ONONDAGA
P.I.N. 305613 | B.I.N. 1093571

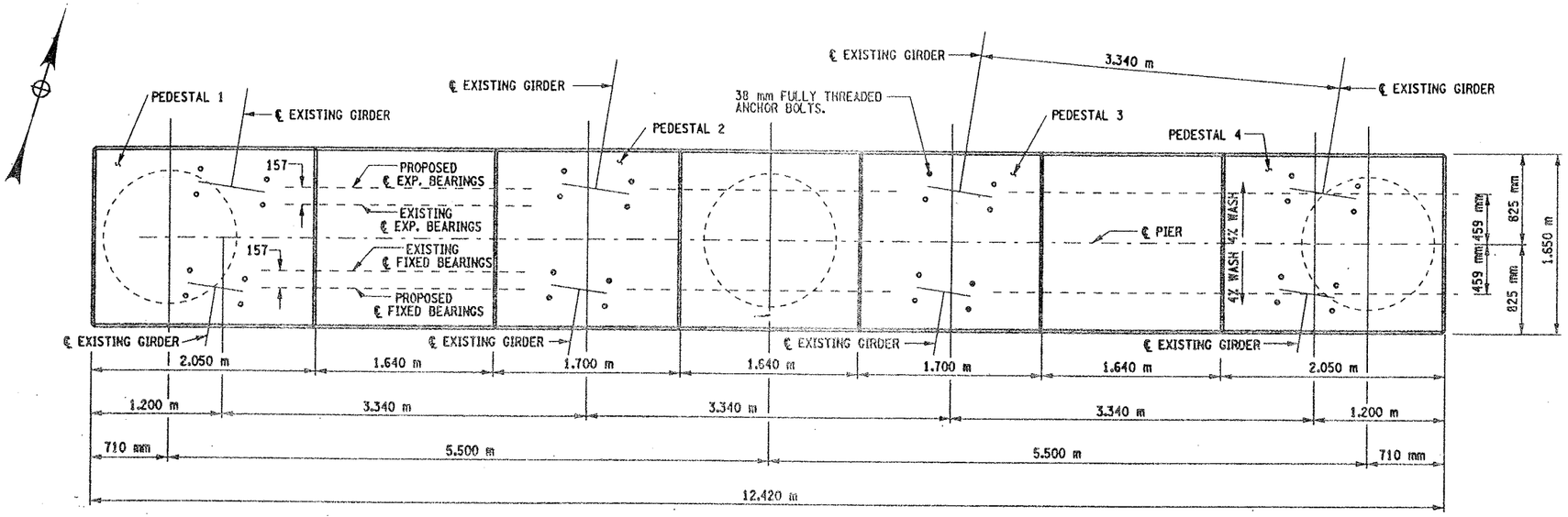

PROPOSED PLAN
SCALE 1:25

NOTES:

1. THESE ELEVATIONS MAY HAVE TO BE ADJUSTED TO ACCOMMODATE THE ACTUAL BEARINGS FURNISHED. IT IS THE RESPONSIBILITY OF THE CONTRACTOR TO COORDINATE ANY CHANGES IN THE BEARINGS WHICH MAY AFFECT THE PEDESTAL ELEVATIONS OR DIMENSIONS.
2. SEE DWG PR17-7S FOR ANCHOR BOLT LAYOUT, PEDESTAL REINFORCEMENT DETAILS, SECTION QQ-QQ, AND CHAMFER DETAIL.
3. SEE DWG. NO. BL-6 FOR BAR LIST AND BAR BENDING DIAGRAMS.
4. SEE BR-1 AND BR-2 FOR BEARING DETAILS.
5. REINF. BAR LAPS, IF REQUIRED SHALL BE STAGGERED SO NO MORE THAN 50% OF THE BARS ARE LAPPED AT ANY ONE LOCATION.

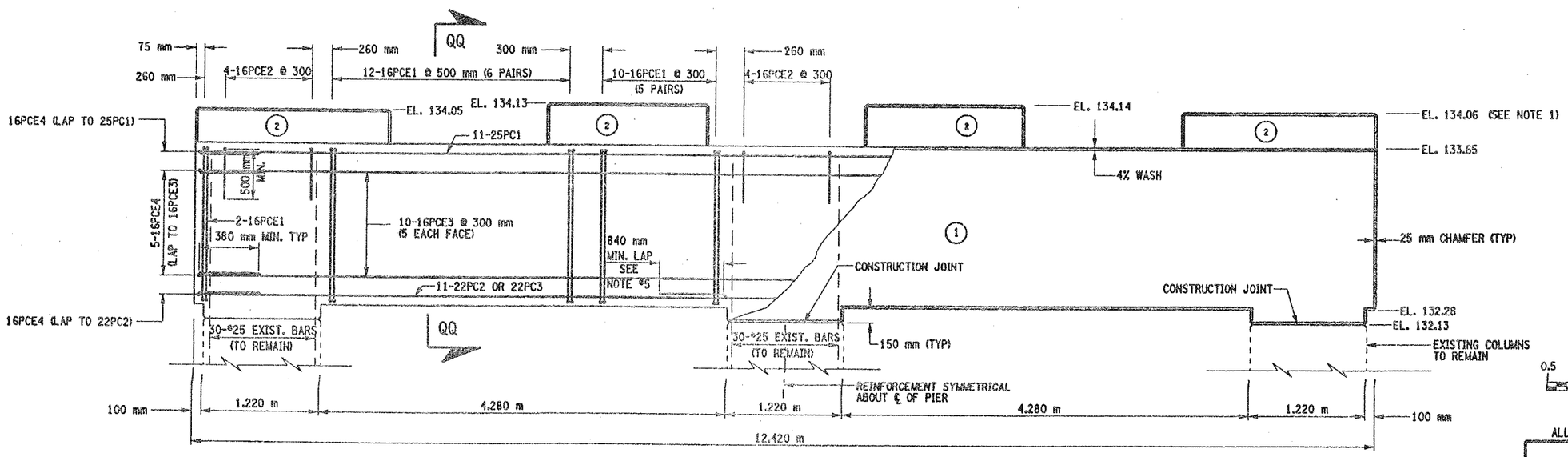

(NO.) INDICATES CONCRETE PLACEMENT NUMBER

PROPOSED ELEVATION
SCALE 1:25

0.5 0 0.5 1 1.5 2 2.5 m
SCALE

ALL DIMENSIONS ARE IN mm UNLESS OTHERWISE NOTED

AS BUILT REVISIONS

SIGNATURE DATE

INTERSTATE 481 SB
OVER
CSX RAILROAD YARD
PIER 4

STATE OF NEW YORK
DEPARTMENT OF TRANSPORTATION

FILENAME	REGION	DATE	DRAWING NO.
305613AE.P4A	3	10/02	PR17-6S

CONCRETE TABLE (m^3)

PLACEMENT	QUANTITY	ITEM NO.
1	5.46	555.09M
2	28.60	555.09M

LIST OF ITEMS USED:

ITEM 555.09M - CONCRETE FOR STRUCTURES, CLASS HP (CM)
ITEM 556.0201M - UNCOATED BAR REINFORCEMENT FOR CONCRETE STRUC. (KG)
ITEM 556.0202M - EPOXY-COATED BAR REINFORCEMENT FOR STRUC. (KG)

DESIGN SUPERVISOR ___ JOB MANAGER ___ ESTIMATED BY ___ DESIGNED BY ___ CHECKED BY ___ DRAFTED BY ___ CHECKED BY ___

FED ROAD REG. NO.	STATE	CONTRACT NO.	SHEET NO.	TOTAL SHEETS
1	N.Y.	D259214	303	432

BRIDGE REHABILITATION PROJECT (ELEMENT SPECIFIC)
VARIOUS BRIDGES ON INTERSTATE 481
TOWNS OF DEWITT AND CICERO
COUNTY OF ONONDAGA
P.I.N. 305613 B.I.N. 1093571

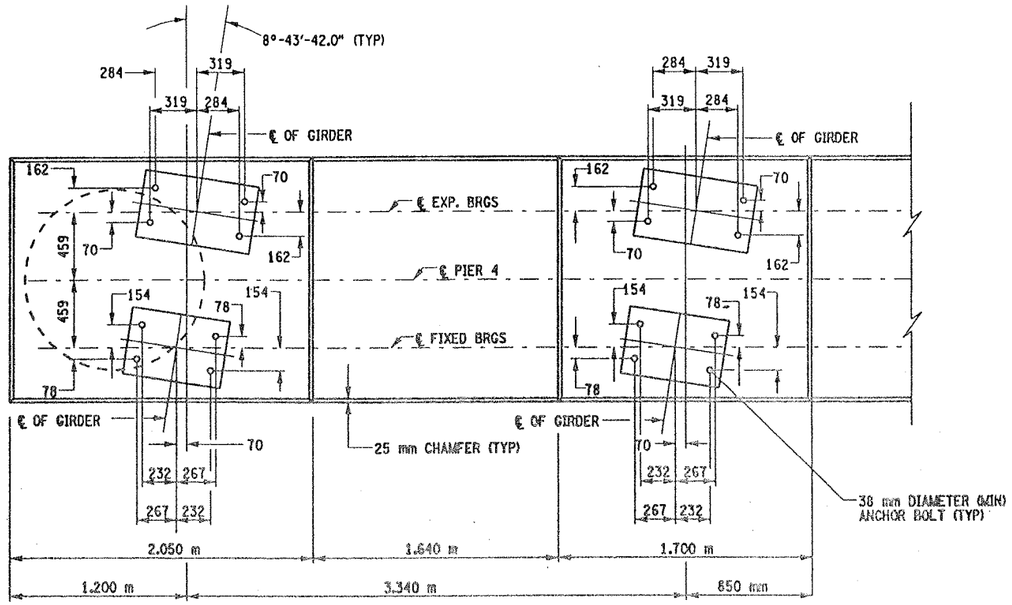

ANCHOR BOLT LAYOUT

SCALE 1:20

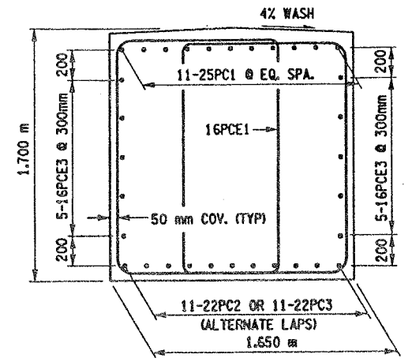

SECTION QQ-QQ

SCALE 1 TO 20

NOTES:

1. SEE DWG. NO. BL-6 FOR BAR LIST AND BAR BENDING DIAGRAM.
2. CONTRACTOR SHALL REMOVE DEBRIS FROM TOP OF PEDESTALS AND TOP OF CAP BEAM. COST TO BE INCLUDED IN THE PRICE BID FOR VARIOUS OTHER ITEMS OF CONTRACT.
3. SEE BR-1 AND BR-2 FOR BEARING DETAILS.
4. SAME BAR MARKS SHALL APPLY FOR BOTH PIERS.

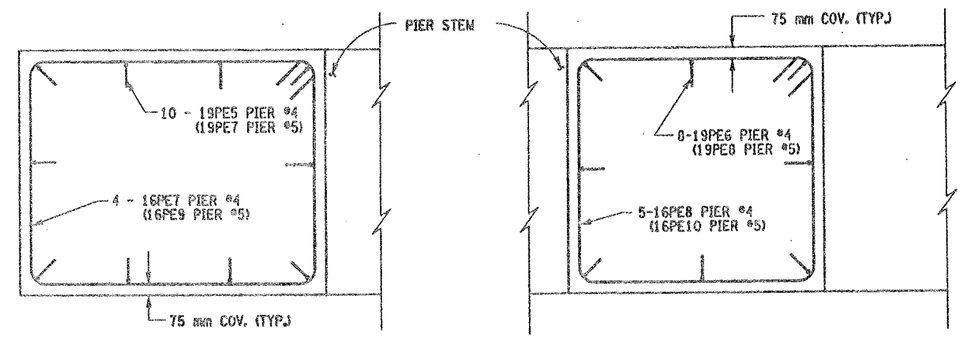

PEDESTALS 1 & 4

PEDESTALS 2 & 3

PEDESTAL REINFORCEMENT (PLAN)

SCALE 1:20

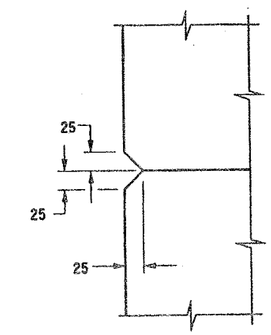

CHAMFER DETAIL

NOT TO SCALE

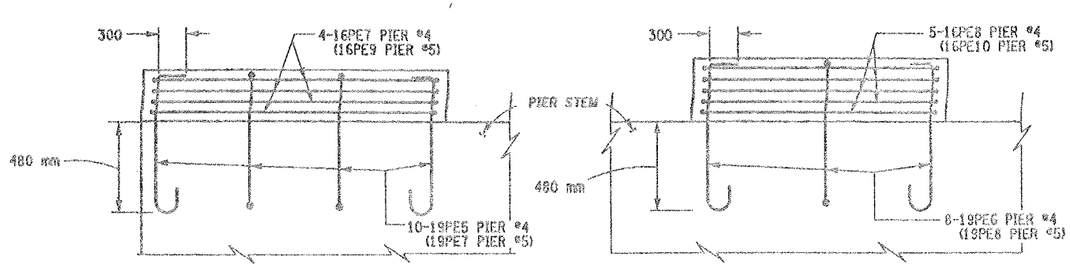

PEDESTALS 1
(PEDESTAL 4 SIMILAR)

PEDESTALS 2 & 3

PEDESTAL REINFORCEMENT (ELEVATION)

SCALE 1:20

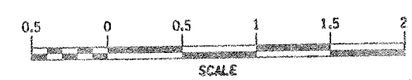

ALL DIMENSIONS ARE IN mm UNLESS OTHERWISE NOTED

LIST OF ITEMS USED:

ITEM 555.09M - CONCRETE FOR STRUCTURES, CLASS HP (CM)
ITEM 555.0201M - UNCOATED BAR REINFORCEMENT FOR CONCRETE STRUC. (KG)
ITEM 555.0202M - EPOXY-COATED BAR REINFORCEMENT FOR STRUC. (KG)
ITEM 580.01M - REMOVAL OF STRUCTURAL CONCRETE (CM)

AS BUILT REVISIONS

SIGNATURE DATE

INTERSTATE 481 SB
OVER
CSX RAILROAD YARD
PIERS 4 & 5

STATE OF NEW YORK
DEPARTMENT OF TRANSPORTATION

FILENAME	REGION	DATE	DRAWING NO.
305613AE.P4A	3	10/02	PR17-7S

CHECKED BY
DRAFTED BY
ESTIMATED BY
CHECKED BY
DESIGNED BY
JOB MANAGER
DESIGN SUPERVISOR

FED ROAD REG. NO.	STATE	CONTRACT NO.	SHEET NO.	TOTAL SHEETS
1	N.Y.	D259214	304	432

BRIDGE REHABILITATION PROJECT (ELEMENT SPECIFIC)
VARIOUS BRIDGES ON INTERSTATE 481
TOWNS OF DEWITT AND CICERO
ONONDAGA COUNTY
P.I.N. 305613 | B.I.N. 1093571

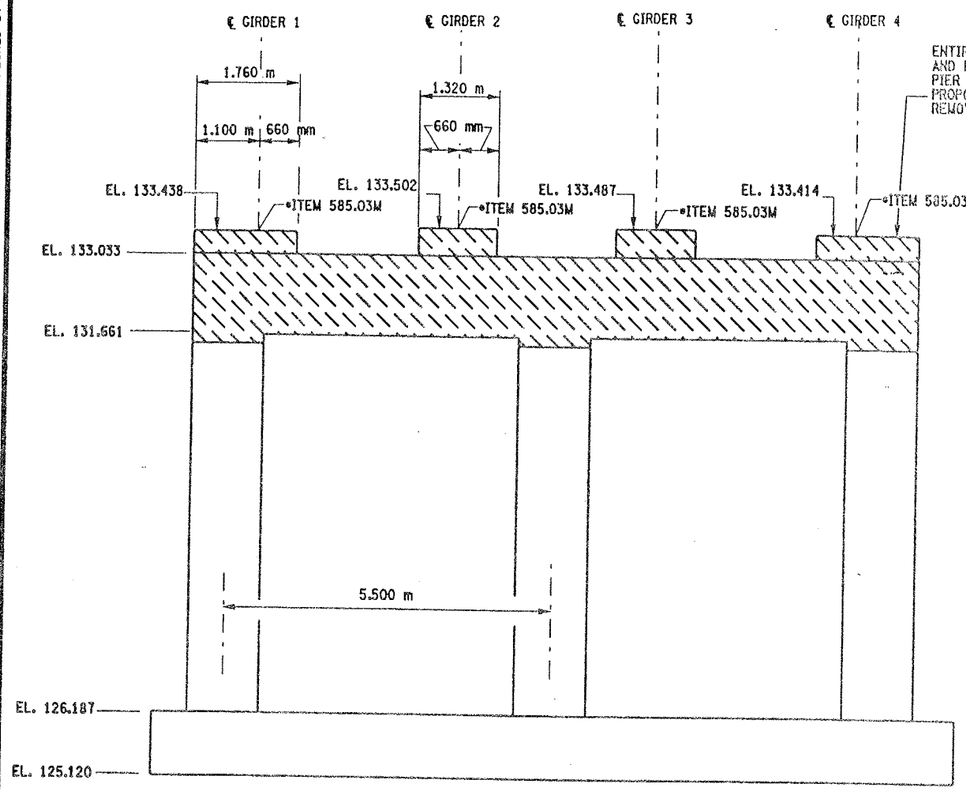

PIER 5 - FRONT FACE (LOOKING NORTH)
BIN 1093571 (REMOVAL)
SCALE: 1 TO 50

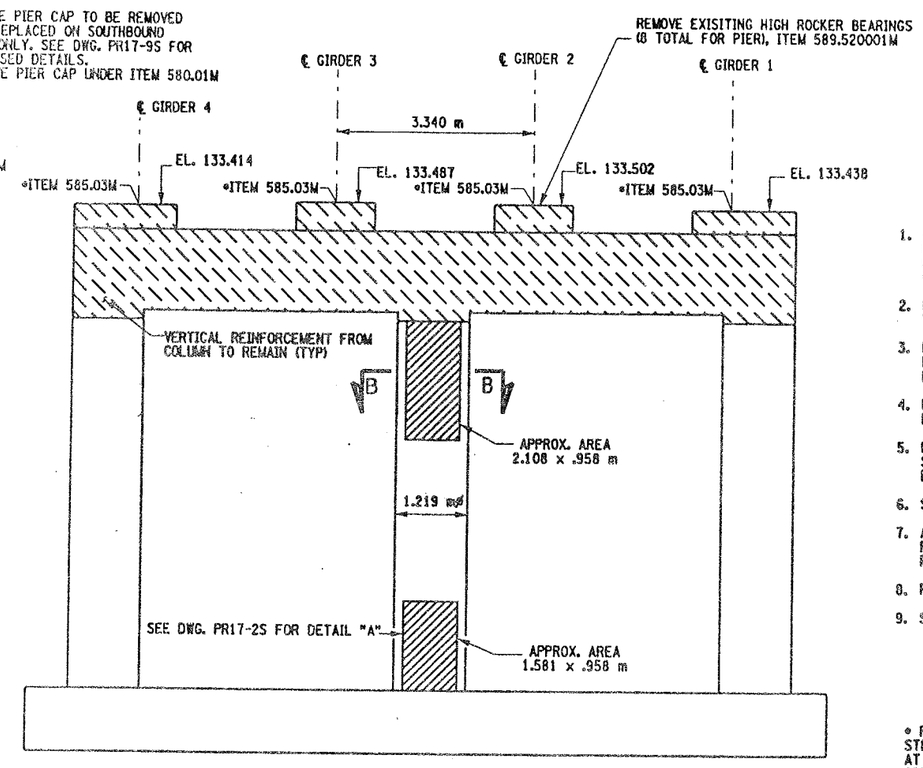

PIER 5 - BACK FACE (LOOKING SOUTH)
BIN 1093571 (REMOVAL)
SCALE: 1 TO 50

NOTES:

1. ALL REINFORCEMENT TO REMAIN, (EXCEPT PEDESTAL REINFORCEMENT AND CAPBEAM REINFORCEMENT). THE VERTICAL REINFORCEMENT IN THE CAPBEAMS-ORIGINATING FROM THE COLUMNS SHALL REMAIN.
2. PEDESTALS NUMERICALLY NUMBERED FROM WEST TO EAST.
3. FOR THE CONCRETE REPAIR AREAS, THE CONCRETE SHALL BE REMOVED TO AT LEAST 40mm MIN. BEYOND THE ENCOUNTERED REINFORCEMENT AND TO SOUND CONCRETE, A.O.B.E.
4. ELEVATIONS SHOWN ARE FROM ORIGINAL CONTRACT PLANS F.I.S.H. 70-7 AND ARE FOR REFERENCE ONLY.
5. REMOVAL DIMENSIONS SHOWN ON PLANS ARE ESTIMATED AND SHALL BE FIELD VERIFIED BY THE CONTRACTOR AND ENGINEER PRIOR TO BEGINNING OF REMOVAL OPERATIONS A.O.B.E.
6. SEE DWG. PR17-2S FOR SECTION B-B AND DETAIL "A".
7. ALL CONCRETE REMOVAL SHALL BE SAWCUT TO PRODUCE NEAT REMOVAL LINES. COST TO BE INCLUDED IN THE PRICE BID FOR ITEM 582.05M AND ITEM 582.07M
8. FOR JACKING LOADS SEE DWG. PR17-1S
9. SEE BR-1 AND BR-2 FOR BEARING TABLE AND BEARING DETAIL

• PERFORM STRUCTURAL LIFTING UNDER ITEM 585.02M - STRUCTURAL LIFTING OPERATIONS - TYPE B (LIFTING AT A PIER) OR ITEM 585.03M - STRUCTURAL LIFTING OPERATIONS - TYPE C (LIFTING AT A PIER WHERE THE CONTRACTOR SHALL BE REQUIRED TO LIFT OFF THE FOOTING AND/OR GROUND LEVEL.

JACKING LOADS:

D.L. = 100 MT
L.L. = 50 MT
TOTAL = 150 MT

LEGEND:

REPAIR: ITEM 582.05M - REMOVAL OF STRUCTURAL CONCRETE- REPLACE WITH CLASS A CONCRETE (CM)

REPLACEMENT: *ITEM 580.01M - REMOVAL OF STRUCTURAL* CONCRETE - (CM) (COMPLETE REMOVAL)

ALL DIMENSIONS ARE IN mm UNLESS OTHERWISE NOTED

LIST OF ITEMS USED:

ITEM 580.01M - REMOVAL OF STRUCTURAL CONCRETE (CM)
ITEM 582.05M - REM. OF STRUC. CONC. - REPLACE WITH CLASS A CONCRETE (CM)
ITEM 585.02M - STRUCTURAL LIFTING OPERATION - TYPE C (EACH)
ITEM 589.520001M - REMOVAL OF EXISITING STEEL (EACH)

AS BUILT REVISIONS

SIGNATURE | DATE

INTERSTATE 481 SB
OVER
CSX RAILROAD YARD
PIER 5

STATE OF NEW YORK
DEPARTMENT OF TRANSPORTATION

FILENAME	REGION	DATE	DRAWING NO.
305613AE.P5A	3	10/02	PR17-8S

DESIGN SUPERVISOR ____ JOB MANAGER ____ DESIGNED BY ____ ESTIMATED BY ____ DRAFTED BY ____ CHECKED BY ____ CHECKED BY ____

FED ROAD REG. NO.	STATE	CONTRACT NO.	SHEET NO.	TOTAL SHEETS
1	N.Y.	D259214	305	432

BRIDGE REHABILITATION PROJECT (ELEMENT SPECIFIC)
VARIOUS BRIDGES ON INTERSTATE 481
TOWNS OF DEWITT AND CICERO
COUNTY OF ONONDAGA
P.I.N. 305613 B.I.N. 1093571

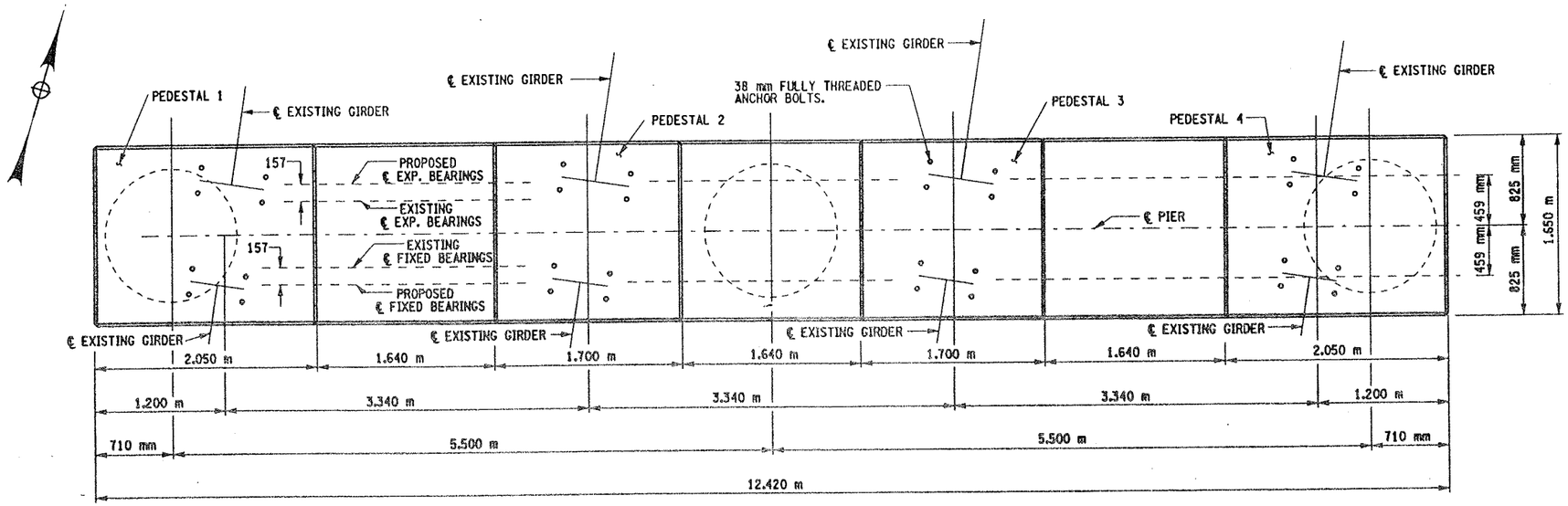

PROPOSED
PLAN
SCALE 1:25

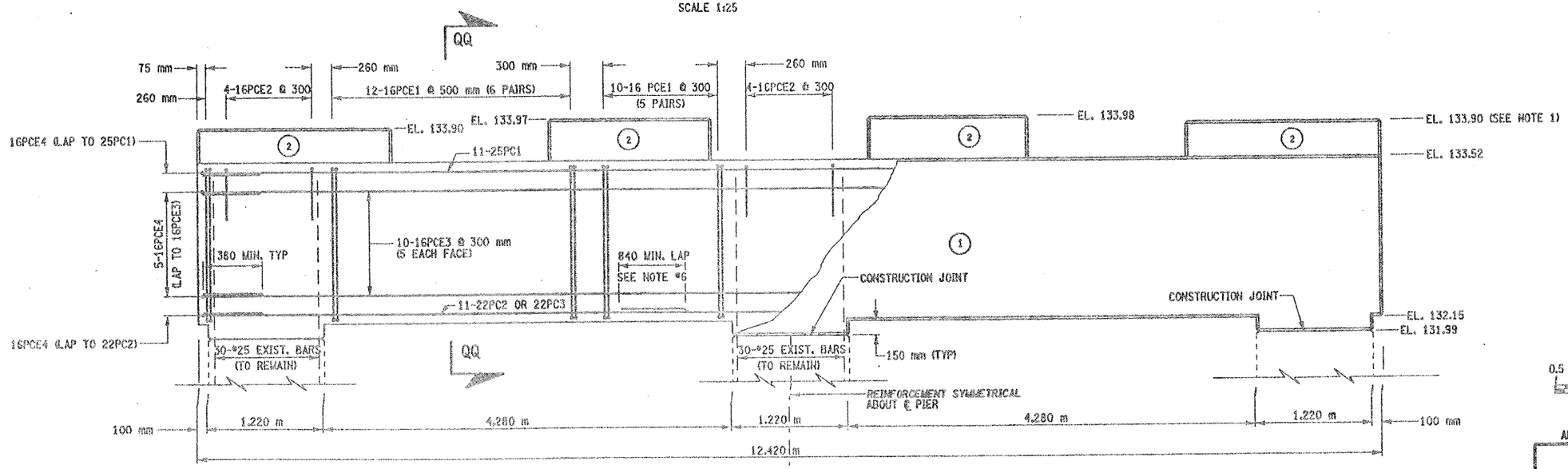

(NO.) INDICATES CONCRETE PLACEMENT NUMBER

PROPOSED
ELEVATION
SCALE 1:25

NOTES:

1. THESE ELEVATIONS MAY HAVE TO BE ADJUSTED TO ACCOMMODATE THE ACTUAL BEARINGS FURNISHED. IT IS THE RESPONSIBILITY OF THE CONTRACTOR TO COORDINATE ANY CHANGES IN THE BEARINGS WHICH MAY AFFECT THE PEDESTAL ELEVATIONS OR DIMENSIONS.
2. SEE DWG. NO. PR17-7S FOR ANCHOR BOLT LAYOUT, PEDESTAL REINFORCEMENT DETAIL AND SECTION Q-Q FOR CHAMFER DETAIL.
3. SEE DWG. NO. BL-6 FOR BARLIST AND BAR BENDING DIAGRAMS.
4. SEE BR-1 AND BR-2 FOR BEARING DETAILS.
5. CONTRACTOR SHALL REMOVE DEBRIS FROM TOP OF PEDESTALS AND TOP OF CAP BEAM. COST TO BE INCLUDED IN THE PRICE BID FOR VARIOUS OTHER ITEMS OF CONTRACT.
6. REINFORCING BAR LAPS, IF REQUIRED, SHALL BE STAGGERED SO THAT NO MORE THAN 50% OF THE BARS ARE LAPPED AT ANY ONE LOCATION.

0.5 0 0.5 1 1.5 2 2.5 m
SCALE

ALL DIMENSIONS ARE IN mm UNLESS OTHERWISE NOTED

AS BUILT REVISIONS

SIGNATURE DATE

INTERSTATE 481 SB
OVER
CSX RAILROAD YARD
PIER 5

STATE OF NEW YORK
DEPARTMENT OF TRANSPORTATION

FILENAME	REGION	DATE	DRAWING NO.
305613AE.P5A	3	10/02	PR17-9S

CONCRETE TABLE (m^3)

PLACEMENT	QUANTITY	ITEM NO.
1	5.12	555.09M
2	28.60	555.09M

LIST OF ITEMS USED:

ITEM 555.09M - CONCRETE FOR STRUCTURES, CLASS HP (CM)
ITEM 556.0201M - UNCOATED BAR REINFORCEMENT FOR CONCRETE STRUC. (KG)
ITEM 556.0202M - EPOXY-COATED BAR REINFORCEMENT FOR STRUC. (KG)

CHECKED BY
DRAFTED BY
ESTIMATED BY
CHECKED BY
DESIGNED BY
JOB MANAGER
DESIGN SUPERVISOR

FED ROAD REG. NO.	STATE	CONTRACT NO.	SHEET NO.	TOTAL SHEETS
1	N.Y.	D259214	306	432

BRIDGE REHABILITATION PROJECT (ELEMENT SPECIFIC)
VARIOUS BRIDGES ON INTERSTATE 481
TOWNS OF DEWITT AND CICERO
ONONDAGA COUNTY
P.I.N. 305613 B.I.N. 1093571

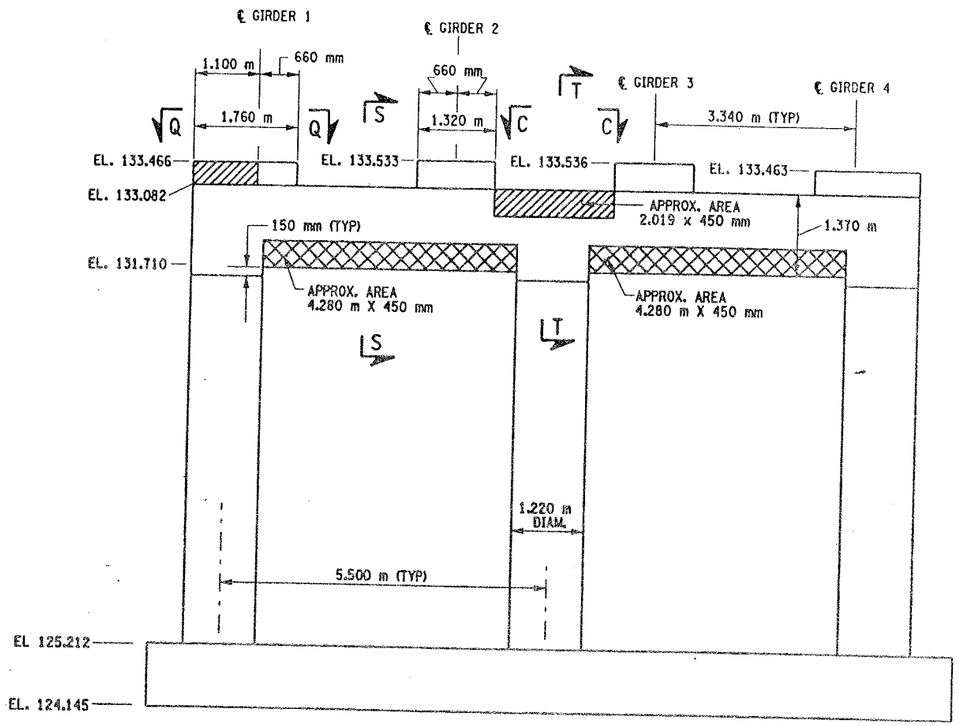

PIER 6 - FRONT FACE (LOOKING NORTH)

BIN 1093571

SCALE: 1 TO 50

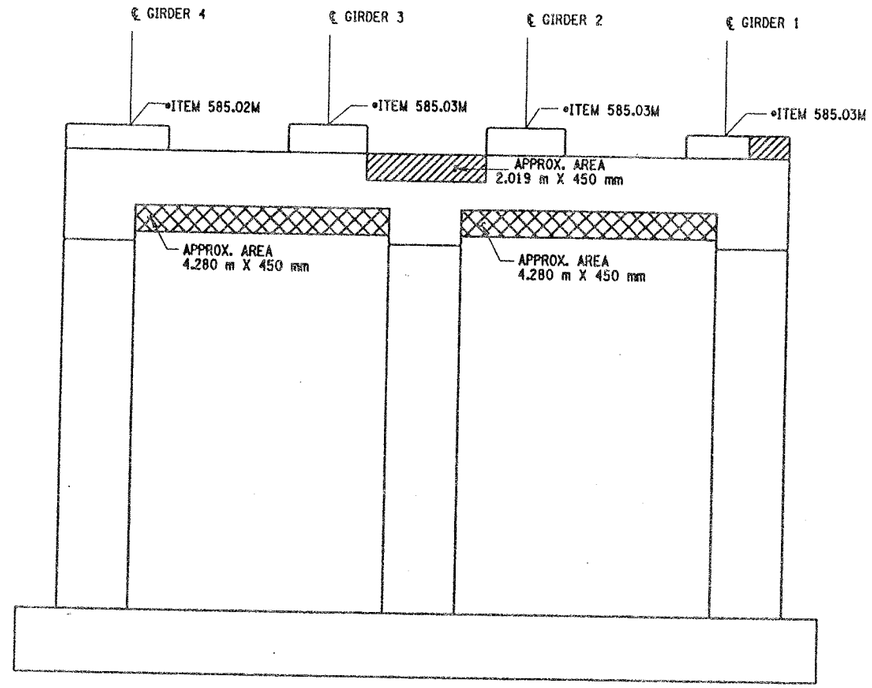

PIER 6- BACK FACE (LOOKING SOUTH)

BIN 1093571

SCALE: 1 TO 50

NOTES:

1. ALL REINFORCEMENT TO REMAIN.
2. RESTORE TO ORIGINAL DIMENSIONS.
3. PEDESTALS NUMERICALLY NUMBERED FROM WEST TO EAST.
4. FOR THE CONCRETE REPAIR AREAS, THE CONCRETE SHALL BE REMOVED TO AT LEAST 40mm MIN. BEYOND THE ENCOUNTERED REINFORCEMENT AND TO SOUND CONCRETE, A.O.B.E.
5. ELEVATIONS SHOWN ARE FROM ORIGINAL CONTRACT PLANS F.I.S.H. 70-7 AND ARE FOR REFERENCE ONLY.
6. REMOVAL DIMENSIONS SHOWN ON PLANS ARE ESTIMATED AND SHALL BE FIELD VERIFIED BY THE CONTRACTOR AND ENGINEER PRIOR TO BEGINNING OF REMOVAL OPERATIONS A.O.B.E.
7. PERFORM BEARING RESTORATION TO ALL EXPANSION BEARINGS (TO INCLUDE RESETTING OF UNDEREXTENDED OR OVEREXTENDED BEARINGS). SEE DWG. BR-10 & BR-11 FOR BEARING RESTORATION DETAILS. SEE DWG. PR17-1S FOR BEARING RESTORATION NOTES.
8. SEE DWG. PR17-1S FOR SECTION C-C.
9. SEE DWG. PR17-5N FOR SECTION T-T.
10. ALL CONCRETE REMOVAL SHALL BE SAWCUT TO PRODUCE NEAT REMOVAL LINES. COST TO BE INCLUDED IN THE PRICE BID FOR ITEM 582.05M AND 582.07M.
11. FOR JACKING NOTES SEE DWG PR17-1S.

• PERFORM STRUCTURAL LIFTING UNDER ITEM 585.02M - STRUCTURAL LIFTING OPERATIONS - TYPE B (LIFTING AT A PIER) OR ITEM 585.03M - STRUCTURAL LIFTING OPERATIONS - TYPE C (LIFTING AT A PIER WHERE THE CONTRACTOR SHALL BE REQUIRED TO LIFT OFF THE FOOTING AND/OR GROUND LEVEL.

JACKING LOADS:

D.L. = 75 MT
L.L. = 50 MT
TOTAL = 125 MT

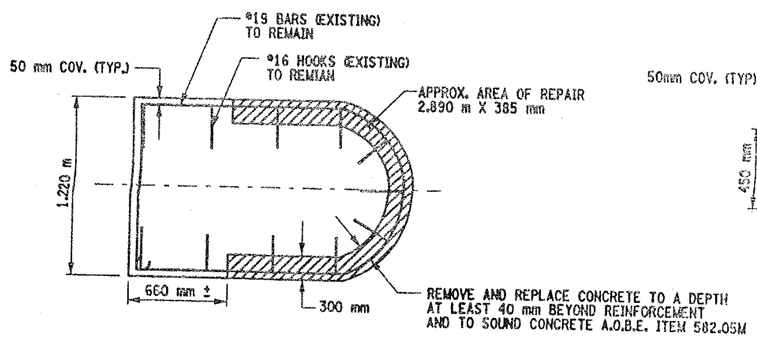

SECTION Q-Q

NOT TO SCALE

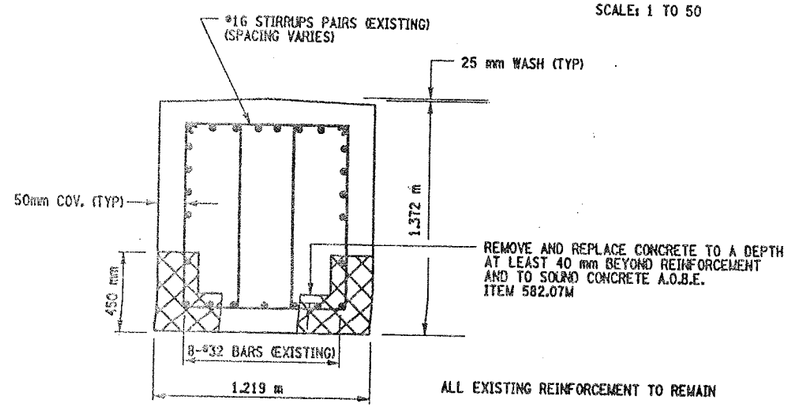

ALL EXISTING REINFORCEMENT TO REMAIN

SECTION S-S

NOT TO SCALE

LEGEND:

ITEM 582.05M - REMOVAL OF STRUCTURAL CONCRETE- REPLACE WITH CLASS A CONCRETE (CM)

ITEM 582.07M - REMOVAL OF STRUCTURAL CONCRETE - REPLACE WITH VERTICAL OVER-HEAD PATCH MATERIAL. (SM)

LIST OF ITEMS USED:

ITEM 15565.4302M - BRIDGE BEARING RESTORATION (EA)
ITEM 582.05M - REM. OF STRUC. CONC. - REPLACE WITH CLASS A CONCRETE (CM)
ITEM 582.07M - REM. OF STRUC. CONC. - REPL. W/ VERT. OVERHEAD PATCH MAT'L (SM)
ITEM 585.02M - STRUCTURAL LIFTING OPERATIONS - TYPE B (EA)
ITEM 585.03M - STRUCTURAL LIFTING OPERATION - TYPE C (EA)

ALL DIMENSIONS ARE IN mm UNLESS OTHERWISE NOTED

AS BUILT REVISIONS

SIGNATURE DATE

INTERSTATE 481 SB
OVER
CSX RAILROAD YARD
PIER 6

STATE OF NEW YORK
DEPARTMENT OF TRANSPORTATION

FILENAME	REGION	DATE	DRAWING NO.
305613AE.P6A	3	10/02	PR17-10S

DESIGN SUPERVISOR ____ JOB MANAGER ____ DESIGNED BY ____ CHECKED BY ____ ESTIMATED BY ____ DRAFTED BY ____ CHECKED BY ____

FED ROAD REG. NO.	STATE	CONTRACT NO.	SHEET NO.	TOTAL SHEETS
1	N.Y.	D259214	307	432

BRIDGE REHABILITATION PROJECT (ELEMENT SPECIFIC)
VARIOUS BRIDGES ON INTERSTATE 481
TOWNS OF DEWITT AND CICERO
ONONDAGA COUNTY
P.I.N. 305613 B.I.N. 1093571

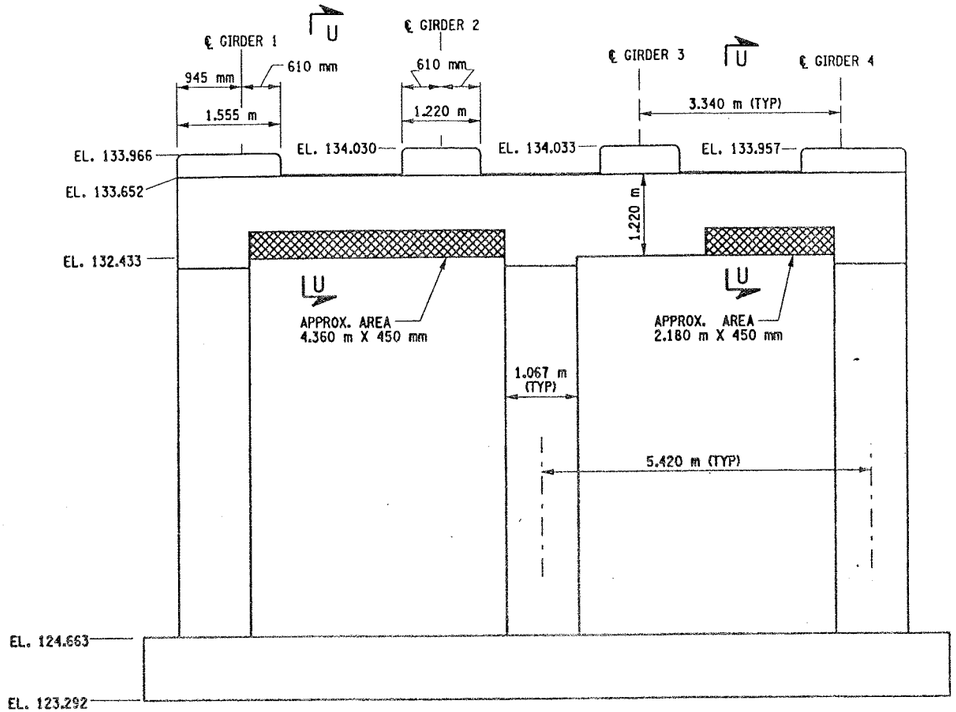

PIER 7 - FRONT FACE LOOKING NORTH
BIN 1093571
SCALE: 1 TO 50

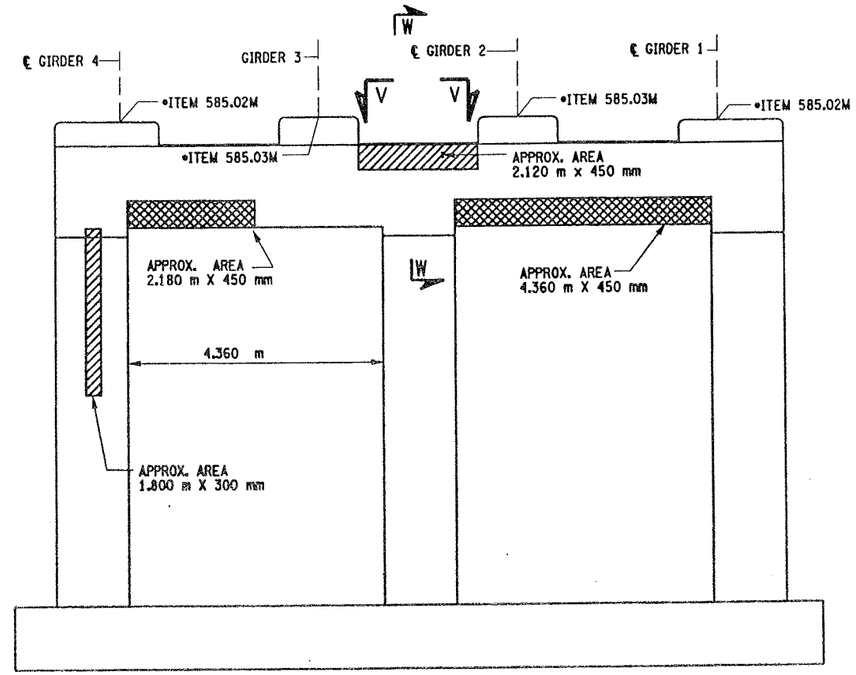

PIER 7 - BACK FACE LOOKING SOUTH
BIN 1093571
SCALE: 1 TO 50

NOTES:

1. ALL REINFORCEMENT TO REMAIN.
2. RESTORE TO ORIGINAL DIMENSIONS.
3. PEDESTALS NUMERICALLY NUMBERED FROM WEST TO EAST.
4. FOR THE CONCRETE REPAIR AREAS, THE CONCRETE SHALL BE REMOVED TO AT LEAST 40mm MIN. BEYOND THE ENCOUNTERED REINFORCEMENT AND TO SOUND CONCRETE. A.O.B.E.
5. ELEVATIONS SHOWN ARE FROM ORIGINAL CONTRACT PLANS F.I.S.H. 70-7 AND ARE FOR REFERENCE ONLY.
6. REMOVAL DIMENSIONS SHOWN ON PLANS ARE ESTIMATED AND SHALL BE FIELD VERIFIED BY THE CONTRACTOR PRIOR TO BEGINNING OF REMOVAL OPERATIONS A.O.B.E.
7. PERFORM BEARING RESTORATION TO ALL EXPANSION BEARINGS (TO INCLUDE RESETTING OF UNDEREXTENDED OR OVEREXTENDED BEARINGS). SEE DWG. PR17-1S FOR BEARING RESTORATION NOTES. SEE DWG. BR-10 & BR-11 FOR BEARING RESTORATION DETAILS.
8. ALL CONCRETE REMOVAL SHALL BE SAWCUT TO PRODUCE NEAT REMOVAL LINES. COST TO BE INCLUDED IN THE PRICE BID FOR ITEM 582.05M AND 582.07M.
9. FOR JACKING NOTES SEE DWG PR17-1S.

• PERFORM STRUCTURAL LIFTING UNDER ITEM 585.02M - STRUCTURAL LIFTING OPERATIONS - TYPE B (LIFTING AT A PIER) OR ITEM 585.03M - STRUCTURAL LIFTING OPERATIONS - TYPE C (LIFTING AT A PIER WHERE THE CONTRACTOR SHALL BE REQUIRED TO LIFT OFF THE FOOTING AND/OR GROUND LEVEL.

JACKING LOADS:

D.L. = 75 MT
L.L. = 50 MT
TOTAL = 125 MT

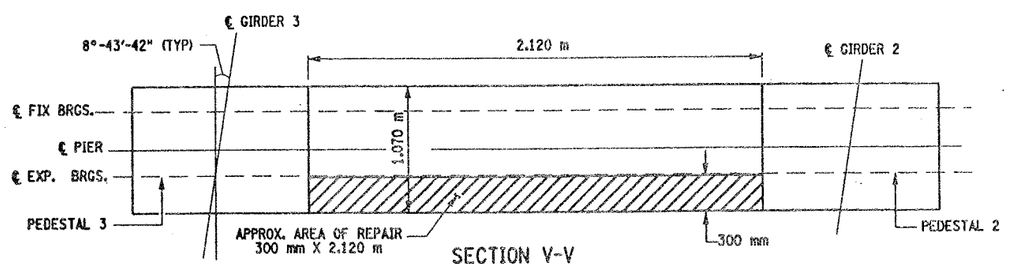

SECTION V-V
NOT TO SCALE

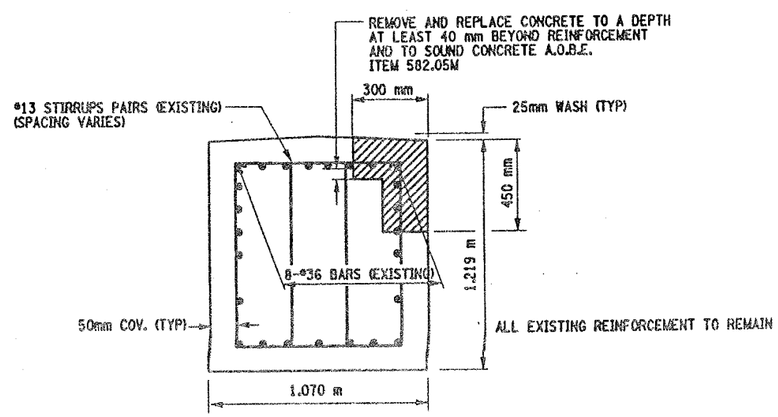

SECTION W-W
NOT TO SCALE

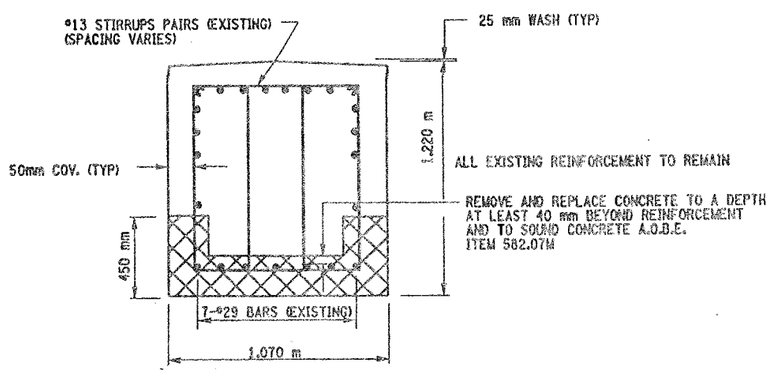

SECTION U-U
NOT TO SCALE

LEGEND:

ITEM 582.05M - REMOVAL OF STRUCTURAL CONCRETE- REPLACE WITH CLASS A CONCRETE (CM)

ITEM 582.07M - REMOVAL OF STRUCTURAL CONCRETE - REPLACE WITH VERTICAL OVER-HEAD PATCH MATERIAL. (SM)

ALL DIMENSIONS ARE IN mm UNLESS OTHERWISE NOTED

LIST OF ITEMS USED:

ITEM 15565.4302M - BRIDGE BEARING RESTORATION
ITEM 582.05M - REM. OF STRUC. CONC. - REPLACE WITH CLASS A CONCRETE (CM)
ITEM 582.07M - REM. OF STRUC. CONC. - REPL. W/ VERT. OVERHEAD PATCH MAT.L (SM)
ITEM 585.02M - STRUCTURAL LIFTING OPERATIONS - TYPE B (EA)
ITEM 585.03M - STRUCTURAL LIFTING OPERATION - TYPE C (EA)

AS BUILT REVISIONS

SIGNATURE DATE

INTERSTATE 481 SB
OVER
CSX RAILROAD YARD
PIER 7

STATE OF NEW YORK
DEPARTMENT OF TRANSPORTATION

FILENAME	REGION	DATE	DRAWING NO.
305613AEJP7A	3	10/02	PR17-11S

DESIGN SUPERVISOR ____ JOB MANAGER ____ DESIGNED BY ____ CHECKED BY ____ ESTIMATED BY ____ DRAFTED BY ____ CHECKED BY ____

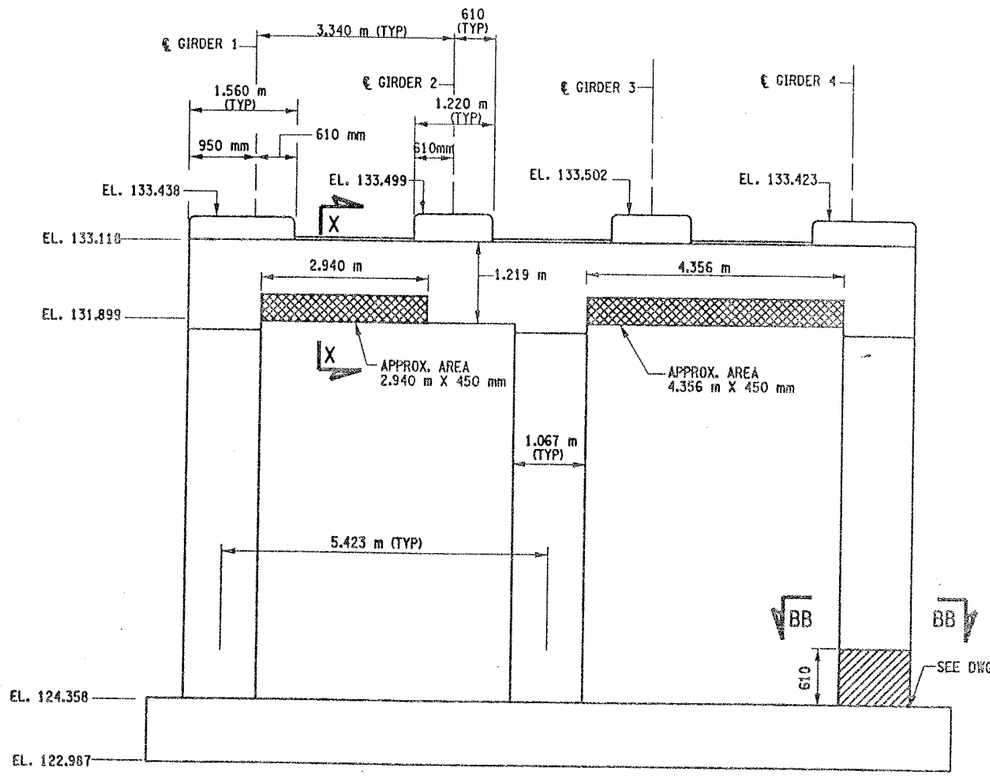

PIER 8 - FRONT FACE (LOOKING NORTH)

BIN 1093571

SCALE: 1 TO 50

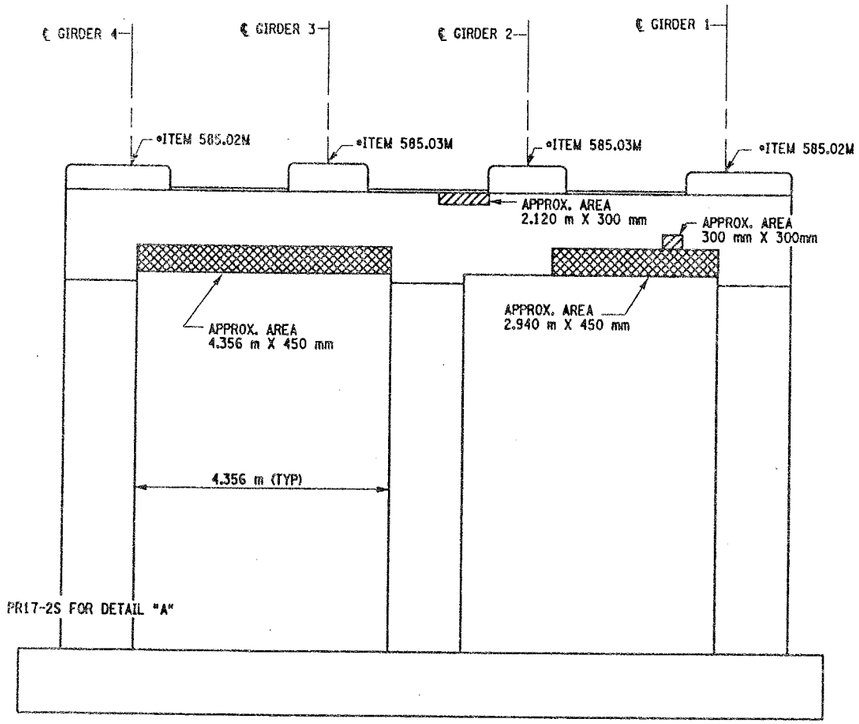

PIER 8 - BACK FACE (LOOKING SOUTH)

BIN 1093571

SCALE: 1 TO 50

FED ROAD REG. NO.	STATE	CONTRACT NO.	SHEET NO.	TOTAL SHEETS
1	N.Y.	D259214	308	432

BRIDGE REHABILITATION PROJECT (ELELMENT SPECIFIC)

VARIOUS BRIDGES ON INTERSTATE 481

TOWNS OF DEWITT AND CICERO

ONONDAGA COUNTY

P.I.N. 305613 | B.I.N. 1093571

NOTES:

1. ALL REINFORCEMENT TO REMAIN.
2. RESTORE TO ORIGINAL DIMENSIONS.
3. PEDESTALS NUMERICALLY NUMBERED FROM WEST TO EAST.
4. FOR THE CONCRETE REPAIR AREAS, THE CONCRETE SHALL BE REMOVED TO AT LEAST 40mm MIN. BEYOND THE ENCOUNTERED REINFORCEMENT AND TO SOUND CONCRETE, A.O.B.E.
5. ELEVATIONS SHOWN ARE FROM ORIGINAL CONTRACT PLANS F.I.S.H. TO-7 AND ARE FOR REFERENCE ONLY.
6. REMOVAL DIMENSIONS SHOWN ON PLANS ARE ESTIMATED AND SHALL BE FIELD VERIFIED BY THE CONTRACTOR AND ENGINEER PRIOR TO BEGINNING OF REMOVAL OPERATIONS A.O.B.E.
7. SEE DWG. PR17-7N FOR SECTIONS X-X.
8. ALL CONCRETE REMOVAL SHALL BE SAWCUT TO PRODUCE NEAT REMOVAL LINES. COST TO BE INCLUDED IN THE PRICE BID FOR ITEM 582.05M AND ITEM 582.07M.
9. FOR JACKING NOTES SEE DWG. PR17-1S
10. CONTRACTOR SHALL REMOVE DEBRIS FROM TOP OF PEDESTALS AND TOP OF CAP BEAM. COST TO BE INCLUDED IN THE PRICE BID FOR VARIOUS OTHER ITEMS OF THE CONTRACT.

LEGEND:

ITEM 582.05M - REMOVAL OF STRUCTURAL CONCRETE- REPLACE WITH CLASS A CONCRETE (CM)

ITEM 582.07M - REMOVAL OF STRUCTURAL CONCRETE - REPLACE WITH VERTICAL OVER-HEAD PATCH MATERIAL. (SM)

• PERFORM STRUCTURAL LIFTING UNDER ITEM 585.02M - STRUCTURAL LIFTING OPERATIONS - TYPE B (LIFTING AT A PIER) OR ITEM 585.03M - STRUCTURAL LIFTING OPERATIONS - TYPE C (LIFTING AT A PIER WHERE THE CONTRACTOR SHALL BE REQUIRED TO LIFT OFF THE FOOTING AND/OR GROUND LEVEL.

JACKING LOADS:

D.L. = 75 MT
L.L. = 50 MT
TOTAL = 125 MT

THE CONTRACTOR SHALL ONLY REMOVE AND REPLACE CONCRETE ON 1/4 OF THE CIRCUMFERENCE OF THE COLUMN SIMUL-TANEOUSLY, FOR THE FULL CURING PERIOD.

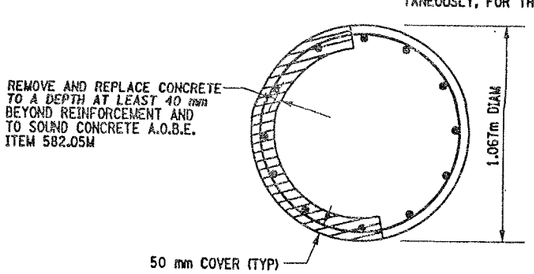

SECTION BB-BB

NOT TO SCALE

LIST OF ITEMS USED:

ITEM 582.05M - REM. OF STRUC. CONC. - REPLACE WITH CLASS A CONCRETE (CM)
ITEM 582.07M - REM. OF STRUC. CONC. - REPL. W/ VERT. OVERHEAD PATCH MAT'L (SM)
ITEM 585.02M - STRUCTURAL LIFTING OPERATIONS - TYPE B (EA)
ITEM 585.03M - STRUCTURAL LIFTING OPERATION - TYPE C (EA)

ALL DIMENSIONS ARE IN mm UNLESS OTHERWISE NOTED

AS BUILT REVISIONS

SIGNATURE | DATE

INTERSTATE 481 SB
OVER
CSX RAILROAD
PIER 8

STATE OF NEW YORK
DEPARTMENT OF TRANSPORTATION

FILENAME	REGION	DATE	DRAWING NO.
305613AE.P8A	3	10/02	PR17-12S

DESIGN SUPERVISOR ____ JOB MANAGER ____ DESIGNED BY ____ CHECKED BY ____ ESTIMATED BY ____ DRAFTED BY ____ CHECKED BY ____

FED ROAD REG. NO.	STATE	CONTRACT NO.	SHEET NO.	TOTAL SHEETS
1	N.Y.	D259214	309	432

BRIDGE REHABILITATION PROJECT (ELEMENT SPECIFIC)
VARIOUS BRIDGES ON INTERSTATE 481
TOWNS OF DEWITT AND CICERO
ONONDAGA COUNTY
P.I.N. 305613 B.I.N. 1093571

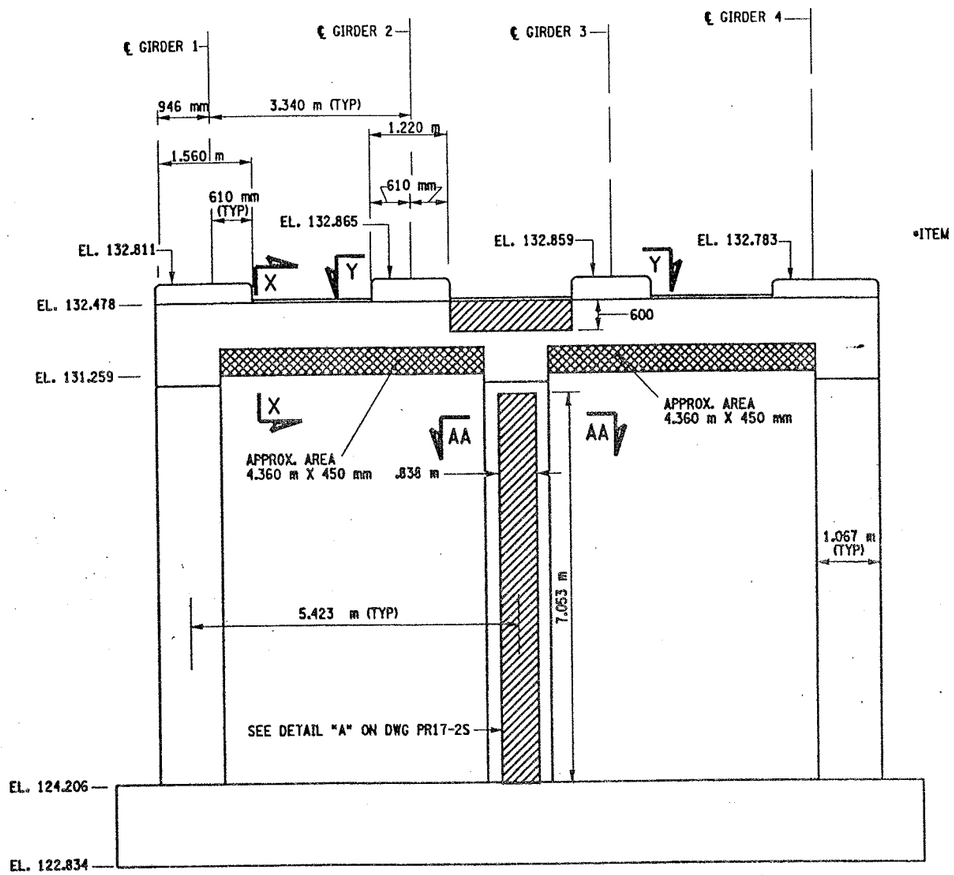

PIER 9 - FRONT FACE (LOOKING NORTH)
BIN 1093571
SCALE: 1 TO 50

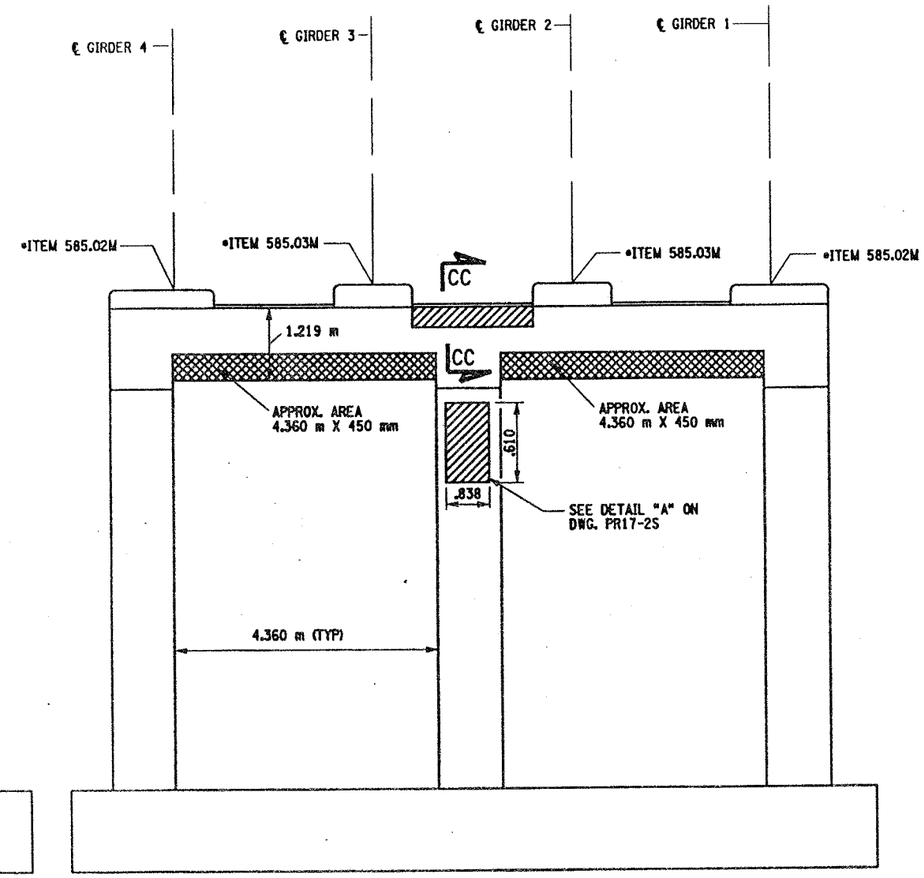

PIER 9 - BACK FACE (LOOKING SOUTH)
BIN 1093571
SCALE: 1 TO 50

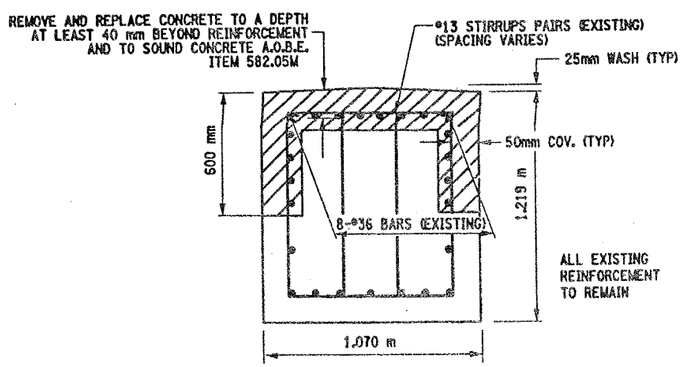

SECTION CC-CC
NOT TO SCALE

NOTES:

1. ALL REINFORCEMENT TO REMAIN.
2. RESTORE TO ORIGINAL DIMENSIONS.
3. PEDESTALS NUMERICALLY NUMBERED FROM WEST TO EAST.
4. FOR THE CONCRETE REPAIR AREAS, THE CONCRETE SHALL BE REMOVED TO AT LEAST 40mm MIN. BEYOND THE ENCOUNTERED REINFORCEMENT AND TO SOUND CONCRETE, A.O.B.E.
5. ELEVATIONS SHOWN ARE FROM ORIGINAL CONTRACT PLANS F.I.S.H. 70-7 AND ARE FOR REFERENCE ONLY.
6. REMOVAL DIMENSIONS SHOWN ON PLANS ARE ESTIMATED AND SHALL BE FIELD VERIFIED BY THE CONTRACTOR PRIOR TO BEGINNING OF REMOVAL OPERATIONS A.O.B.E.
7. PERFORM BEARING RESTORATION TO ALL EXPANSION BEARINGS (TO INCLUDE RESETTING OF UNDEREXTENDED OR OVEREXTENDED BEARINGS). SEE DWG. PR17-1S FOR BEARING RESTORATION NOTES. SEE DWG. BR-10 & BR-11 FOR BEARING RESTORATION DETAILS.
8. SEE DWG. PR17-7N FOR SECTIONS AA-AA, Y-Y AND X-X.
9. ALL CONCRETE REMOVAL SHALL BE SAWCUT TO PRODUCE NEAT REMOVAL LINES. COST TO BE INCLUDED IN THE PRICE BID FOR ITEM 582.05M AND 582.07M.
10. FOR JACKING NOTES SEE DWG PR17-1S
11. CONTRACTOR SHALL REMOVE DEBRIS FROM TOP OF CAP BEAM. COST TO BE INCLUDED IN THE PRICE BID FOR VARIOUS OTHER ITEMS OF CONTRACT.

• PERFORM STRUCTURAL LIFTING UNDER ITEM 585.02M - STRUCTURAL LIFTING OPERATIONS - TYPE B (LIFTING AT A PIER) OR ITEM 585.03M - STRUCTURAL LIFTING OPERATIONS - TYPE C (LIFTING AT A PIER WHERE THE CONTRACTOR SHALL BE REQUIRED TO LIFT OFF THE FOOTING AND/OR GROUND LEVEL.

JACKING LOADS:

D.L. = 75 MT
L.L. = 50 MT
TOTAL = 125 MT

LEGEND:

ITEM 582.05M - REMOVAL OF STRUCTURAL CONCRETE- REPLACE WITH CLASS A CONCRETE. (CM)

ITEM 582.07M - REMOVAL OF STRUCTURAL CONCRETE - REPLACE WITH VERTICAL OVER-HEAD PATCH MATERIAL. (SM)

LIST OF ITEMS USED:

ITEM 15565.4302M - BRIDGE BEARING RESTORATION (EA)
ITEM 582.05M - REM. OF STRUC. CONC. - REPLACE WITH CLASS A CONCRETE (CM)
ITEM 582.07M - REM. OF STRUC. CONC. - REPL. W/ VERT. OVERHEAD PATCH MAT'L. (SM)
ITEM 585.02M - STRUCTURAL LIFTING OPERATIONS - TYPE B (EA)
ITEM 585.03M - STRUCTURAL LIFTING OPERATION - TYPE C (EA)

ALL DIMENSIONS ARE IN mm UNLESS OTHERWISE NOTED

AS BUILT REVISIONS

SIGNATURE DATE

INTERSTATE 481 SB
OVER
CSX RAILROAD YARD
PIER 9

STATE OF NEW YORK
DEPARTMENT OF TRANSPORTATION

FILENAME	REGION	DATE	DRAWING NO.
305613AE.P9A	3	10/02	PR17-13S

CHECKED BY
DRAFTED BY
ESTIMATED BY
CHECKED BY
DESIGNED BY
JOB MANAGER
DESIGN SUPERVISOR

FED ROAD REG. NO.	STATE	CONTRACT NO.	SHEET NO.	TOTAL SHEETS
1	N.Y.	D259214	310	432

BRIDGE REHABILITATION PROJECT (ELEMENT SPECIFIC)
VARIOUS BRIDGES ON INTERSTATE 481
TOWNS OF DEWITT AND CICERO
ONONDAGA COUNTY
P.I.N. 305613 B.I.N. 1093571

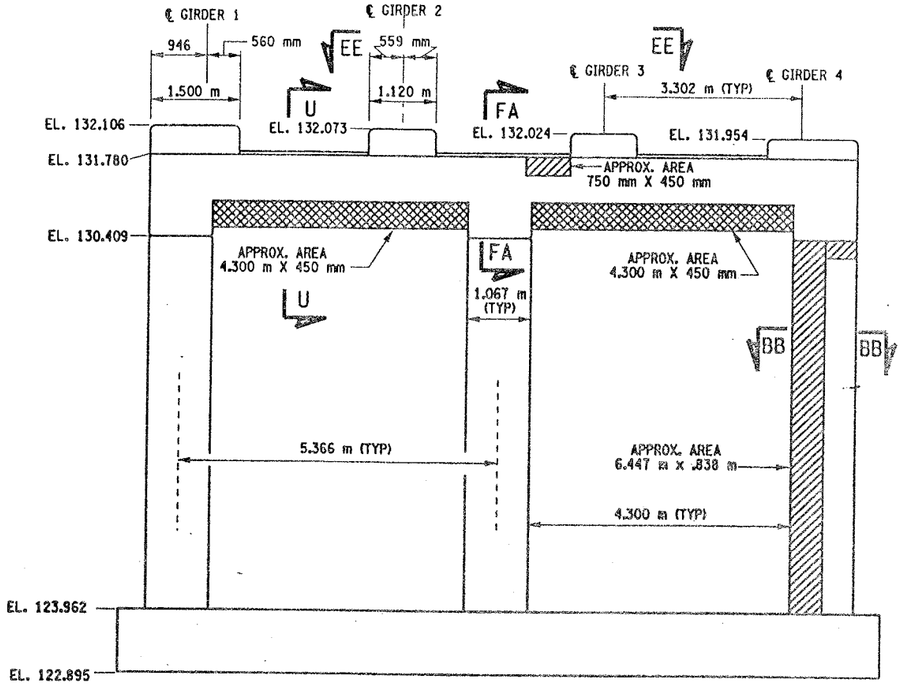

PIER 10 - FRONT FACE (LOOKING NORTH)
BIN 1093571
SCALE: 1 TO 50

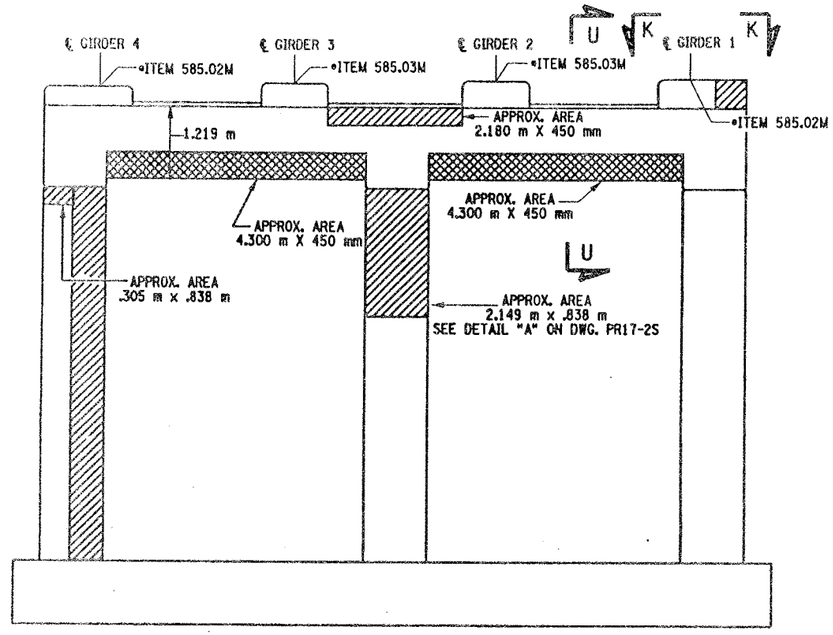

PIER 10 - BACK FACE (LOOKING SOUTH)
BIN 1093571
SCALE: 1 TO 50

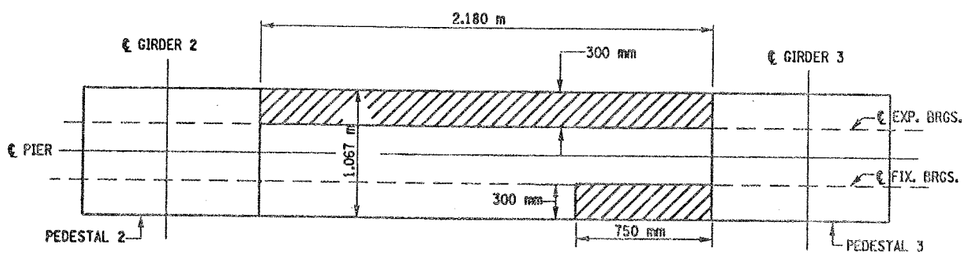

SECTION EE-EE
NOT TO SCALE

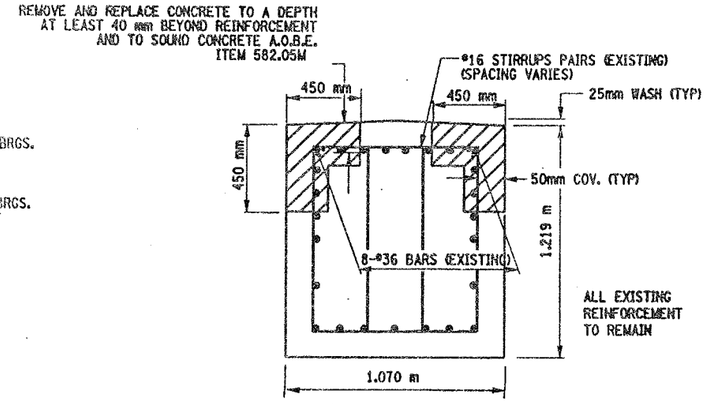

SECTION FA-FA
NOT TO SCALE

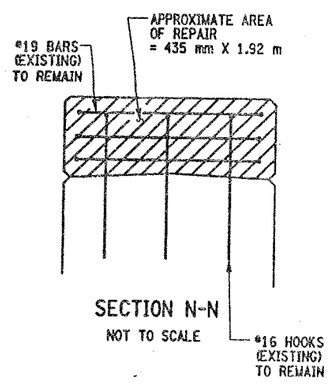

SECTION N-N
NOT TO SCALE

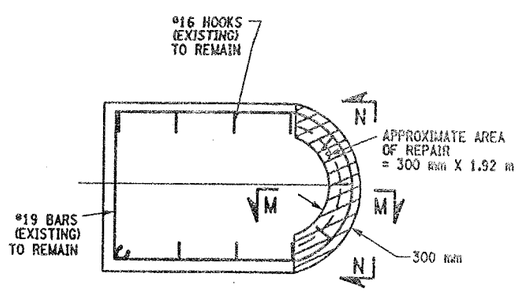

SECTION K-K
NOT TO SCALE

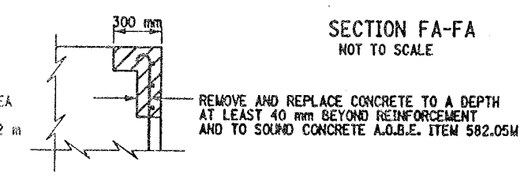

SECTION M-M
NOT TO SCALE

LIST OF ITEMS USED:

ITEM 15565.4302M - BRIDGE BEARING RESTORATION (EA)
ITEM 582.05M - REM. OF STRUC. CONC. - REPLACE WITH CLASS A CONCRETE (CM)
ITEM 582.07M - REM. OF STRUC. CONC. - REPL. W/ VERT. OVERHEAD PATCH MAT'L (SM)
ITEM 585.02M - STRUCTURAL LIFTING OPERATIONS - TYPE B (EA)
ITEM 585.03M - STRUCTURAL LIFTING OPERATION - TYPE C (EA)

NOTES:

1. ALL REINFORCEMENT TO REMAIN.
2. RESTORE TO ORIGINAL DIMENSIONS.
3. PEDESTALS NUMERICALLY NUMBERED FROM WEST TO EAST.
4. FOR THE CONCRETE REPAIR AREAS, THE CONCRETE SHALL BE REMOVED TO AT LEAST 40mm MIN. BEYOND THE ENCOUNTERED REINFORCEMENT AND TO SOUND CONCRETE, A.O.B.E.
5. ELEVATIONS SHOWN ARE FROM ORIGINAL CONTRACT PLANS F.I.S.H. 70-7 AND ARE FOR REFERENCE ONLY.
6. REMOVAL DIMENSIONS SHOWN ON PLANS ARE ESTIMATED AND SHALL BE FIELD VERIFIED BY THE CONTRACTOR PRIOR TO BEGINNING OF REMOVAL OPERATIONS A.O.B.E.
7. PERFORM BEARING RESTORATION TO ALL EXPANSION BEARINGS (TO INCLUDE RESETTING OF UNDEREXTENDED OR OVEREXTENDED BEARINGS). SEE DWG. PR17-1S FOR BEARING RESTORATION NOTES. SEE DWG. BR-10 & BR-11 FOR BEARING RESTORATION DETAILS.
8. SEE DWG. PR17-12S FOR SECTION BB-BB.
9. ALL CONCRETE REMOVAL SHALL BE SAWCUT TO PRODUCE NEAT REMOVAL LINES. COST TO BE INCLUDED IN THE PRICE BID FOR ITEM 582.05M AND 582.07M.
10. FOR JACKING NOTES SEE DWG PR17-1S.
11. SEE DWG. PR-17-11S FOR SECTION U-U.

• PERFORM STRUCTURAL LIFTING UNDER ITEM 585.02M - STRUCTURAL LIFTING OPERATIONS - TYPE B (LIFTING AT A PIER) OR ITEM 585.03M - STRUCTURAL LIFTING OPERATIONS - TYPE C (LIFTING AT A PIER WHERE THE CONTRACTOR SHALL BE REQUIRED TO LIFT OFF THE FOOTING AND/OR GROUND LEVEL.

JACKING LOADS:

D.L. = 75 MT
L.L. = 50 MT
TOTAL = 125 MT

LEGEND:

ITEM 582.05M - REMOVAL OF STRUCTURAL CONCRETE- REPLACE WITH CLASS A CONCRETE (CM)

ITEM 582.07M - REMOVAL OF STRUCTURAL CONCRETE - REPLACE WITH VERTICAL OVER-HEAD PATCH MATERIAL. (SM)

ALL DIMENSIONS ARE IN mm UNLESS OTHERWISE NOTED

AS BUILT REVISIONS

SIGNATURE DATE

INTERSTATE 481 SB
OVER
CSX RAILROAD YARD
PIER 10

STATE OF NEW YORK
DEPARTMENT OF TRANSPORTATION

FILENAME	REGION	DATE	DRAWING NO.
305613AE.P10	3	10/02	PR17-14S

DESIGN SUPERVISOR ____ JOB MANAGER ____ DESIGNED BY ____ ESTIMATED BY ____ CHECKED BY ____ DRAFTED BY ____ CHECKED BY ____

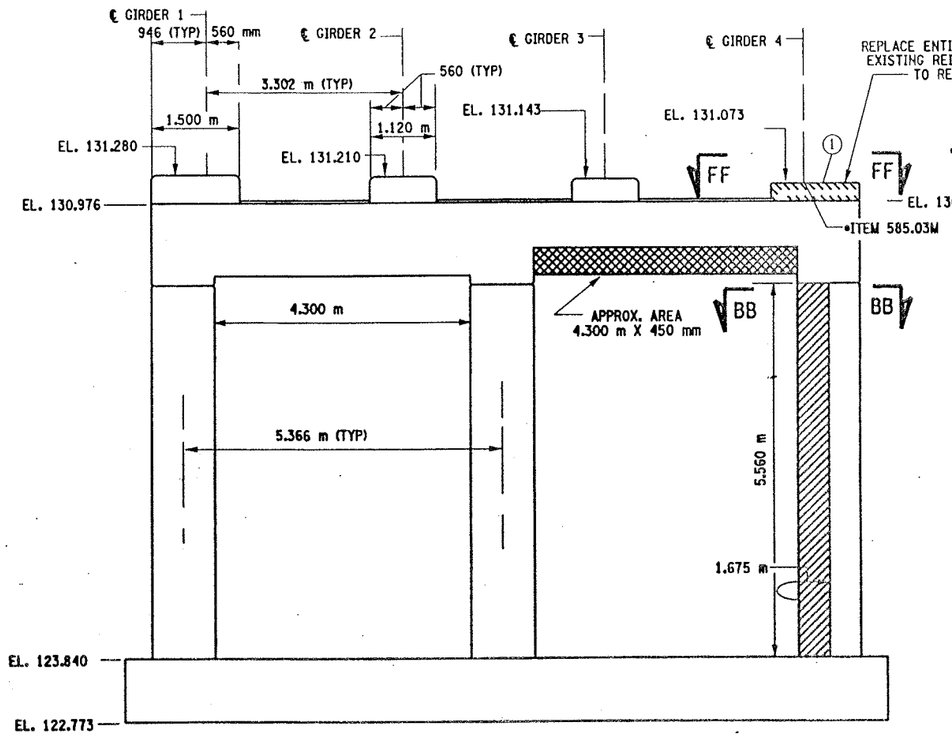

PIER 11 - FRONT FACE (LOOKING NORTH)
BIN 1093571

SCALE: 1 TO 50

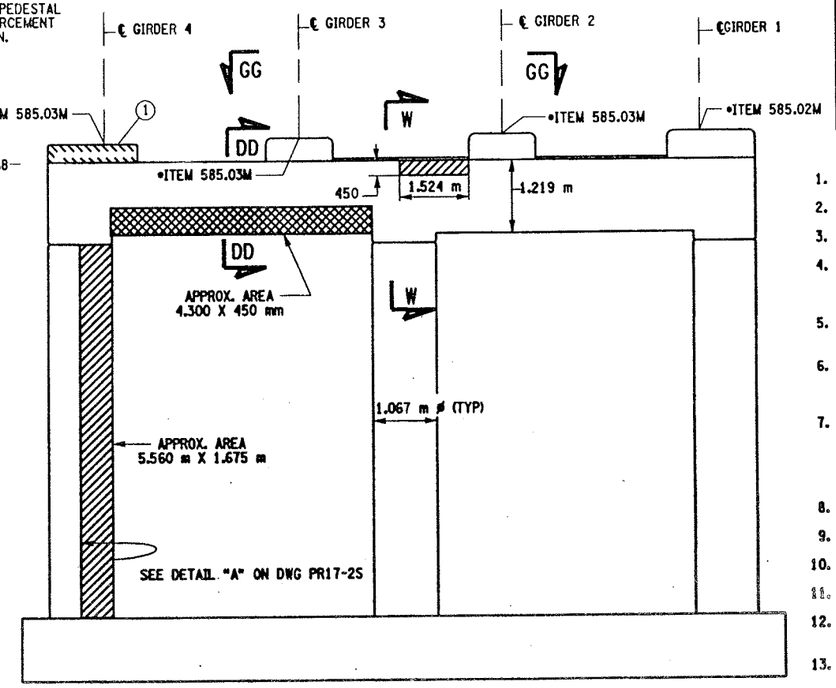

PIER 11 - BACK FACE (LOOKING SOUTH)
BIN 1093571

SCALE: 1 TO 50

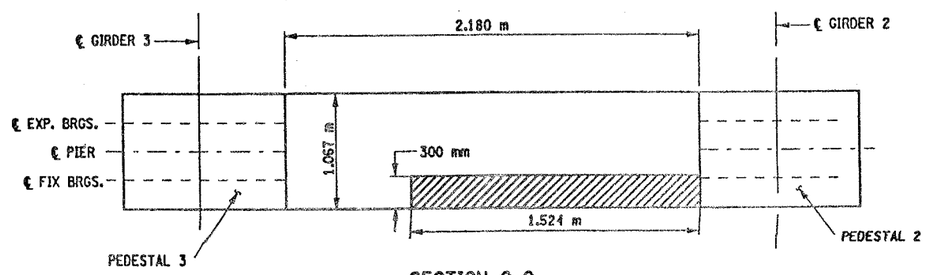

SECTION G-G

NOT TO SCALE

CONCRETE TABLE (m³)		
PLACEMENT	QUANTITY	ITEM NO.
1	0.49	555.0105M

① INDICATES CONCRETE PLACEMENT NUMBER

LIST OF ITEMS USED

ITEM 15565.4302M - BRIDGE BEARING RESTORATION (EA)
ITEM 555.0105M - CONCRETE FOR STRUCTURES, CLASS A (CM)
ITEM 580.01M - REMOVAL OF STRUCTURAL CONCRETE (CM)
ITEM 582.05M - REM. OF STRUC. CONC. - REPLACE WITH CLASS A CONCRETE (CM)
ITEM 582.07M - REM. OF STRUC. CONC. - REPL. W/ VERT. OVERHEAD PATCH MAT'L. (SM)
ITEM 585.02M - STRUCTURAL LIFTING OPERATIONS - TYPE B (EA)
ITEM 585.03M - STRUCTURAL LIFTING OPERATION - TYPE (EA)

FED ROAD REG. NO.	STATE	CONTRACT NO.	SHEET NO.	TOTAL SHEETS
1	N.Y.	D259214	311	432

BRIDGE REHABILITATION PROJECT (ELEMENT SPECIFIC)
VARIOUS BRIDGES ON INTERSTATE 481
TOWNS OF DEWITT AND CICERO
ONONDAGA COUNTY
P.I.N. 305613 B.I.N. 1093571

NOTES:

1. ALL REINFORCEMENT TO REMAIN.
2. RESTORE TO ORIGINAL DIMENSIONS.
3. PEDESTALS NUMERICALLY NUMBERED FROM WEST TO EAST.
4. FOR THE CONCRETE REPAIR AREAS, THE CONCRETE SHALL BE REMOVED TO AT LEAST 40mm MIN. BEYOND THE ENCOUNTERED REINFORCEMENT AND TO SOUND CONCRETE, A.O.B.E.
5. ELEVATIONS SHOWN ARE FROM ORIGINAL CONTRACT PLANS F.I.S.H. 70-7 AND ARE FOR REFERENCE ONLY.
6. REMOVAL DIMENSIONS SHOWN ON PLANS ARE ESTIMATED AND SHALL BE FIELD VERIFIED BY THE CONTRACTOR PRIOR TO BEGINNING OF REMOVAL OPERATIONS A.O.B.E.
7. PERFORM BEARING RESTORATION TO ALL EXPANSION BEARINGS (TO INCLUDE RESETTING OF UNDEREXTENDED OR OVEREXTENDED BEARINGS). SEE DWG. PR17-1S FOR BEARING RESTORATION NOTES. SEE DWG. BR-10 & BR-11 FOR BEARING RESTORATION DETAILS.
8. SEE DWG. PR17-12S FOR SECTION BB-BB.
9. SEE DWG PR17-10N FOR SECTION DD-DD.
10. SEE DWG PR17-11N FOR SECTION FF-FF.
11. SEE DWG. PR17-11S FOR SECTION W-W.
12. PEDESTAL 4 SHALL BE REPLACED TO EXISITING DIMENSIONS, ITEM 555.0105 M.
13. ALL CONCRETE REMOVAL SHALL BE SAWCUT TO PRODUCE NEAT REMOVAL LINES. COST TO BE INCLUDED IN THE PRICE BID FOR ITEM 582.05M AND ITEM 582.07M.
14. FOR JACKING NOTES SEE DWG. PR17-1S

• PERFORM STRUCTURAL LIFTING UNDER ITEM 585.02M - STRUCTURAL LIFTING OPERATIONS - TYPE B (LIFTING AT A PIER) OR ITEM 585.03M - STRUCTURAL LIFTING OPERATIONS - TYPE C (LIFTING AT A PIER WHERE THE CONTRACTOR SHALL BE REQUIRED TO LIFT OFF THE FOOTING AND/OR GROUND LEVEL.

JACKING LOADS:

D.L. = 75 MT
L.L. = 50 MT
TOTAL = 125 MT

LEGEND:

ITEM 582.05M - REMOVAL OF STRUCTURAL CONCRETE- REPLACE WITH CLASS A CONCRETE. (CM)

ITEM 582.07M - REMOVAL OF STRUCTURAL CONCRETE - REPLACE WITH VERTICAL OVER-HEAD PATCH MATERIAL. (SM)

ITEM 580.01 M - REMOVAL OF STRUCTURAL CONCRETE. (CM) AND ITEM 555.0105 M - CONCRETE FOR STRUCTURES CLASS A. (CM)

ALL DIMENSIONS ARE IN mm UNLESS OTHERWISE NOTED

AS BUILT REVISIONS

SIGNATURE DATE

INTERSTATE 481 SB
OVER
CSX RAILROAD YARD
PIER 11

STATE OF NEW YORK
DEPARTMENT OF TRANSPORTATION

FILENAME	REGION	DATE	DRAWING NO.
305613AE.P11	3	10/02	PR17-15S

DESIGN SUPERVISOR ____ JOB MANAGER ____ DESIGNED BY ____ CHECKED BY ____ DRAFTED BY ____ CHECKED BY ____ ESTIMATED BY ____

FED ROAD REG. NO.	STATE	CONTRACT NO.	SHEET NO.	TOTAL SHEETS
1	N.Y.	D259214	314	432

BRIDGE REHABILITATION PROJECT (ELEMENT SPECIFIC)
VARIOUS BRIDGES ON INTERSTATE 481
TOWNS OF DEWITT AND CICERO
ONONDAGA COUNTY
P.I.N. 305613 B.I.N. 1093571

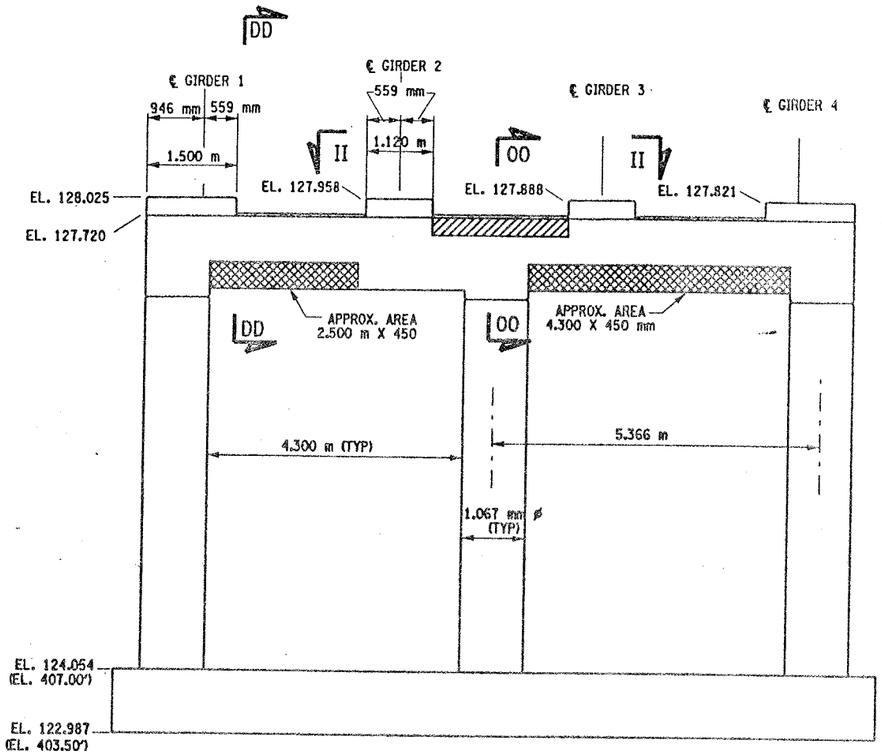

PIER 14 - FRONT FACE (LOOKING NORTH)
BIN 1093571
SCALE: 1 TO 50

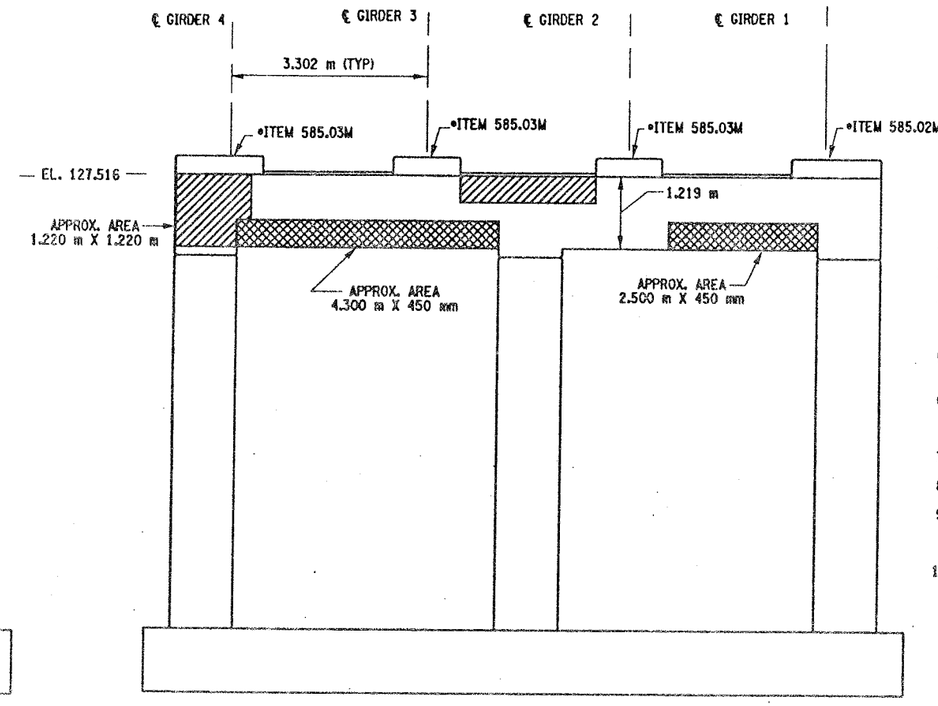

PIER 14 - BACK FACE (LOOKING SOUTH)
BIN 1093571
SCALE: 1 TO 50

NOTES:

1. ALL REINFORCEMENT TO REMAIN.
2. RESTORE TO ORIGINAL DIMENSIONS.
3. PEDESTALS NUMERICALLY NUMBERED FROM WEST TO EAST.
4. FOR THE CONCRETE REPAIR AREAS, THE CONCRETE SHALL BE REMOVED TO AT LEAST 40mm MIN. BEYOND THE ENCOUNTERED REINFORCEMENT AND TO SOUND CONCRETE, A.O.B.E.
5. ELEVATIONS SHOWN ARE FROM ORIGINAL CONTRACT PLANS F.I.S.H. TO-7 AND ARE FOR REFERENCE ONLY.
6. REMOVAL DIMENSIONS SHOWN ON PLANS ARE ESTIMATED AND SHALL BE FIELD VERIFIED BY THE CONTRACTOR PRIOR TO BEGINNING OF REMOVAL OPERATIONS A.O.B.E.
7. SEE DWG. PR17-10N FOR SECTION DD-DD.
8. SEE DWG. PR17-16S FOR SECTION II-II.
9. ALL CONCRETE REMOVAL SHALL BE SAWCUT TO PRODUCE NEAT REMOVAL LINES. COST TO BE INCLUDED IN THE PRICE BID FOR ITEM 582.05M AND 582.07M.
10. FOR JACKING NOTES SEE DWG PR17-1S.

• PERFORM STRUCTURAL LIFTING UNDER ITEM 585.02M - STRUCTURAL LIFTING OPERATIONS - TYPE B (LIFTING AT A PIER) OR ITEM 585.03M - STRUCTURAL LIFTING OPERATIONS - TYPE C (LIFTING AT A PIER WHERE THE CONTRACTOR SHALL BE REQUIRED TO LIFT OFF THE FOOTING AND/OR GROUND LEVEL.

JACKING LOADS:

D.L. = 75 MT
L.L. = 50 MT
TOTAL = 125 MT

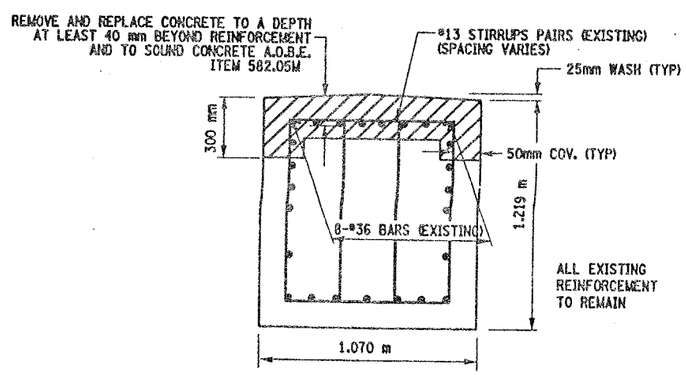

SECTION 00-00
NOT TO SCALE

LEGEND:

ITEM 582.05M - REMOVAL OF STRUCTURAL CONCRETE- REPLACE WITH CLASS A CONCRETE. (CM)

ITEM 582.07M - REMOVAL OF STRUCTURAL CONCRETE - REPLACE WITH VERTICAL OVERHEAD PATCH MATERIAL. (SM)

ALL DIMENSIONS ARE IN mm UNLESS OTHERWISE NOTED

LIST OF ITEMS USED:

ITEM 582.05M - REM. OF STRUC. CONC. - REPLACE WITH CLASS A CONCRETE (CM)
ITEM 582.07M - REM. OF STRUC. CONC. - REPL. W/ VERT. OVERHEAD PATCH MAT'L (SM)
ITEM 585.02M - STRUCTURAL LIFTING OPERATIONS - TYPE B (EA)
ITEM 585.03M - STRUCTURAL LIFTING OPERATION - TYPE C (EA)

AS BUILT REVISIONS

SIGNATURE DATE

INTERSTATE 481 SB
OVER
CSX RAILROAD YARD
PIER 14

STATE OF NEW YORK
DEPARTMENT OF TRANSPORTATION

FILENAME	REGION	DATE	DRAWING NO.
305613AE.P14	3	10/02	PR17-18S

DESIGN SUPERVISOR ____ JOB MANAGER ____ DESIGNED BY ____ CHECKED BY ____ ESTIMATED BY ____ DRAFTED BY ____ CHECKED BY ____

FED ROAD REG. NO.	STATE	CONTRACT NO.	SHEET NO.	TOTAL SHEETS
1	N.Y.	D259214	315	432

BRIDGE REHABILITATION PROJECT (ELEMENT SPECIFIC)
VARIOUS BRIDGES ON INTERSTATE 481
TOWN OF DEWITT AND CICERO
ONONDAGA COUNTY
P.I.N. 305613 B.I.N. 1093572

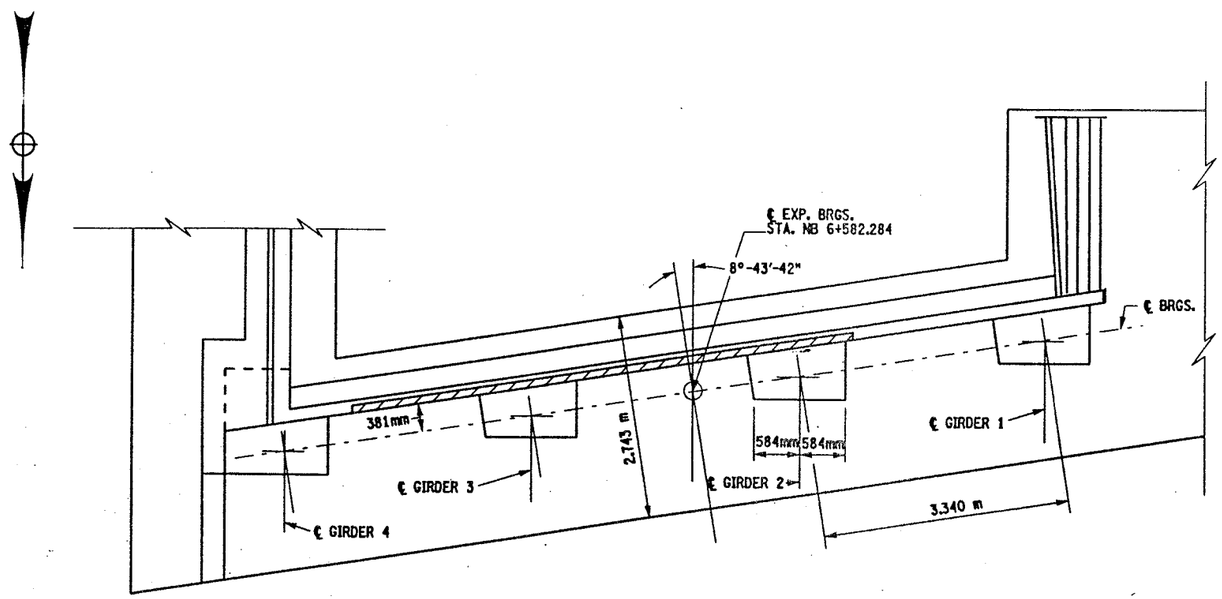

SOUTH ABUTMENT
PLAN

SCALE 1:40

NOTES:

1. ALL DIMENSIONS SHOWN FOR CONCRETE REMOVAL ARE APPROXIMATE AND SHALL BE FIELD VERIFIED BY THE CONTRACTOR AND EIC.
2. REMOVE CONCRETE TO LIMITS SHOWN AS WELL AS TO SOUND CONCRETE, A.O.B.E.
3. WHEN REMOVING EXISTING CONCRETE, SAWCUT 5 mm MIN. TO PRODUCE NEAT REMOVAL LINES. ANY COST TO BE
4. INCLUDED IN THE BID PRICE FOR ITEM 582.05M.
5. ALL EXISTING REINFORCEMENT TO REMAIN.
6. ELEVATIONS ARE GIVEN FOR QUANTITY ESTIMATES ONLY.
7. REFER TO CONTRACT D250094 FOR ORIGINAL CONSTRUCTION DETAILS.

AREAS OF PROPOSED WORK: ITEM 582.05M
REMOVAL OF STRUCTURAL CONCRETE-
REPLACEMENT WITH CLASS A CONCRETE (CM)

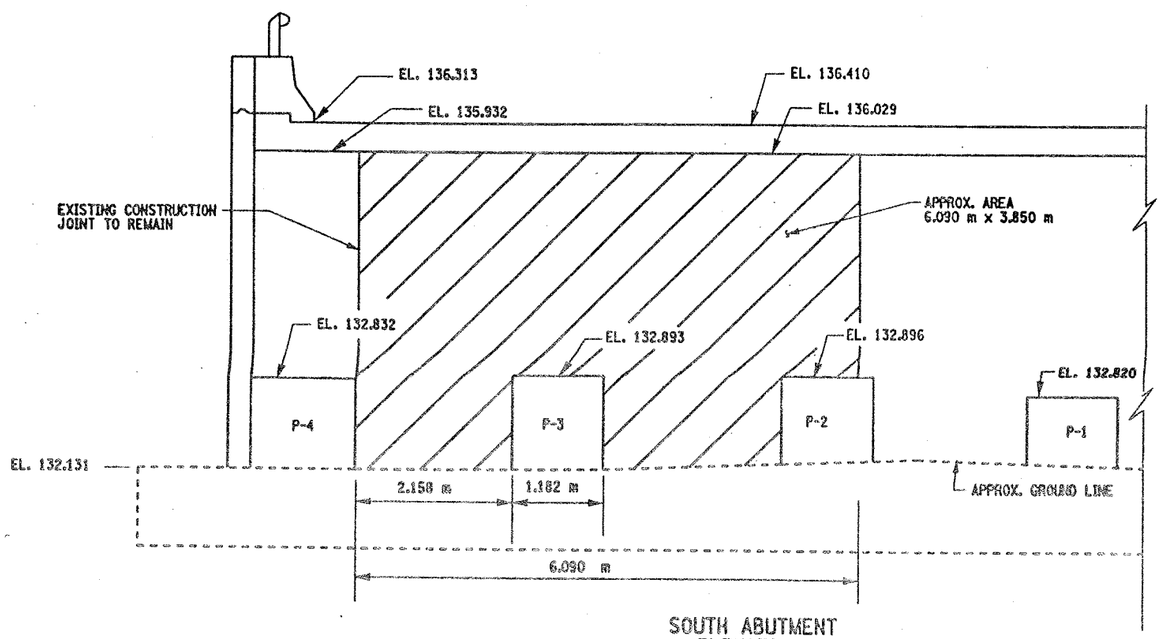

SOUTH ABUTMENT
ELEVATION

SCALE 1:40

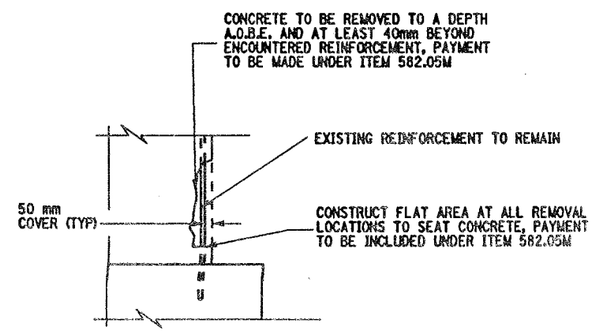

REMOVAL DETAIL
NOT TO SCALE

LIST OF ITEMS USED:

ITEM 582.05M - REMOVE STRUCTURAL CONCRETE WITH CLASS A CONCRETE (CM)

ALL DIMENSIONS ARE IN m UNLESS OTHERWISE NOTED

AS BUILT REVISIONS

SIGNATURE DATE

INTERSTATE 481 NB
OVER
CSX RAILROAD
SOUTH ABUTMENT

STATE OF NEW YORK
DEPARTMENT OF TRANSPORTATION

FILENAME	REGION	DATE	DRAWING NO.
305613AE.A1B	3	10/02	AB17-1

DESIGN SUPERVISOR ____ JOB MANAGER ____ DESIGNED BY ____ CHECKED BY ____ ESTIMATED BY ____ DRAFTED BY ____ CHECKED BY ____

FED ROAD REG. NO.	STATE	CONTRACT NO.	SHEET NO.	TOTAL SHEETS
1	N.Y.	D259214	316	432

BRIDGE REHABILITATION PROJECT (ELEMENT SPECIFIC)
VARIOUS BRIDGES ON INTERSTATE 481
TOWNS OF DEWITT AND CICERO
ONONDAGA COUNTY
P.I.N. 305613 B.I.N. 1093572

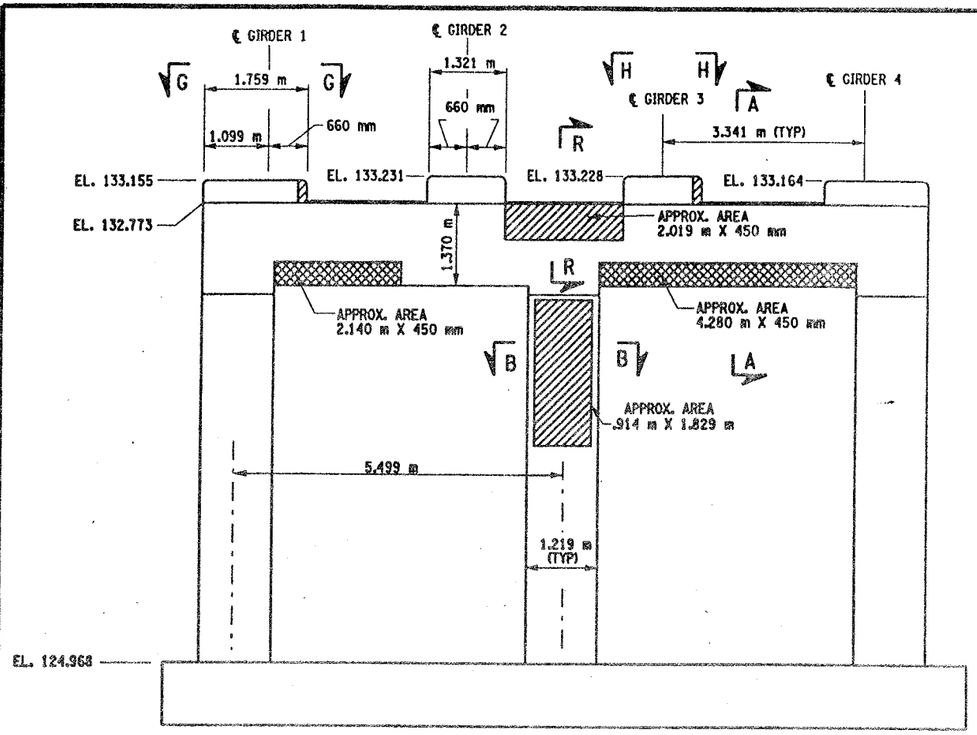

PIER 1 - FRONT FACE (LOOKING NORTH)
BIN 1093572
SCALE: 1 TO 50

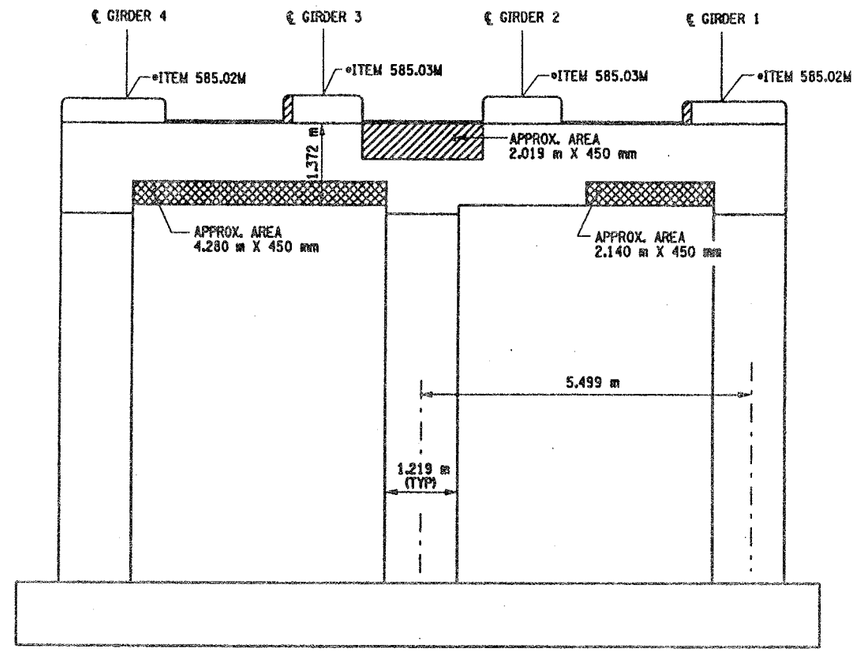

PIER 1- BACK FACE (LOOKING SOUTH)
BIN 1093572
SCALE: 1 TO 50

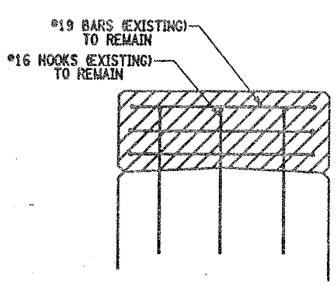

SECTION I-I
NOT TO SCALE

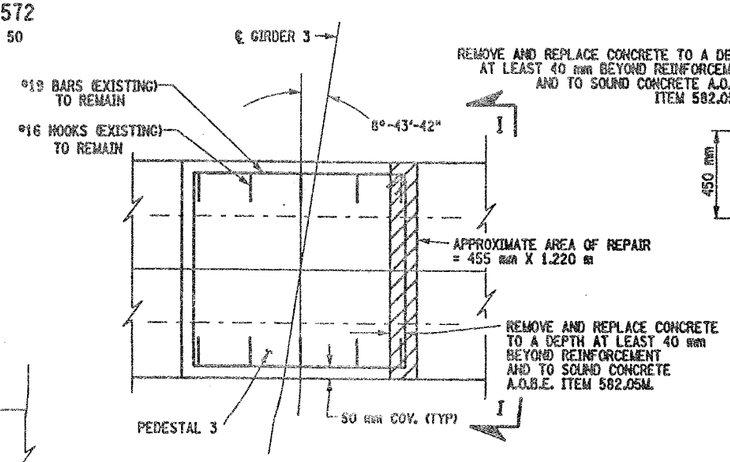

SECTION H-H
NOT TO SCALE

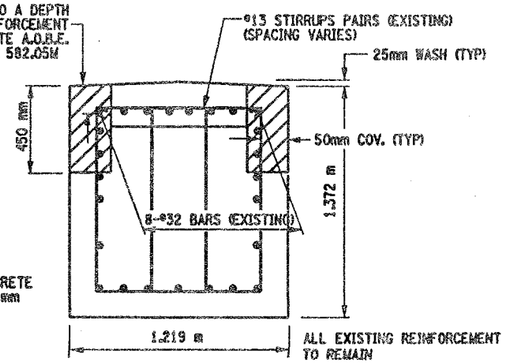

SECTION R-R
NOT TO SCALE

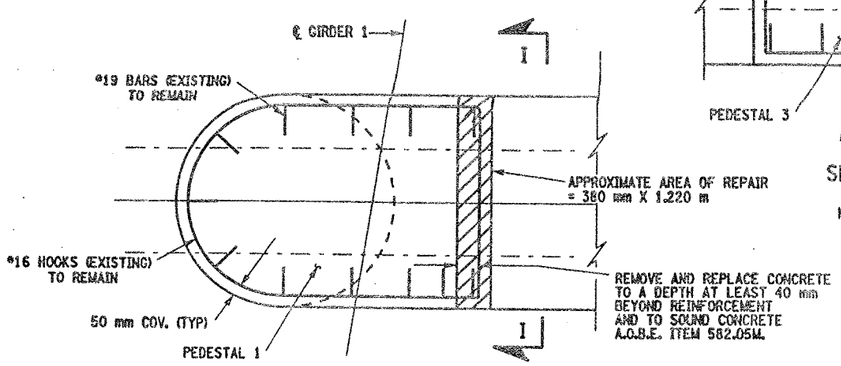

SECTION G-G
NOT TO SCALE

NOTES:

1. ALL REINFORCEMENT TO REMAIN.
2. RESTORE TO ORIGINAL DIMENSIONS.
3. PEDESTALS NUMERICALLY NUMBERED FROM WEST TO EAST.
4. FOR THE CONCRETE REPAIR AREAS, THE CONCRETE SHALL BE REMOVED TO AT LEAST 40mm MIN. BEYOND THE ENCOUNTERED REINFORCEMENT AND TO SOUND CONCRETE, A.O.B.E.
5. ELEVATIONS SHOWN ARE FROM ORIGINAL CONTRACT PLANS F.I.S.H. 70-7 AND ARE FOR REFERENCE ONLY.
6. REMOVAL DIMENSIONS SHOWN ON PLANS ARE ESTIMATED AND SHALL BE FIELD VERIFIED BY THE CONTRACTOR PRIOR TO BEGINNING OF REMOVAL OPERATIONS A.O.B.E.
7. PERFORM BEARING RESTORATION TO ALL EXPANSION BEARINGS (TO INCLUDE RESETTING OF UNDEREXTENDED OR OVEREXTENDED BEARINGS). SEE DWG. BR-10 & BR-11 FOR BEARING RESTORATION DETAILS. SEE DWG. PR17-1S FOR BEARING RESTORATION NOTES.
8. FOR SECTION A-A AND B-B SEE DWG. PR17-2S.
9. ALL CONCRETE REMOVAL SHALL BE SAWCUT TO PRODUCE NEAT REMOVAL LINES. COST TO BE INCLUDED IN THE PRICE BID FOR ITEM 582.05M AND ITEM 582.07M
10. CONTRACTOR SHALL REMOVE DEBRIS FROM TOP OF PEDESTALS AND TOP OF CAP BEAM. COST TO BE INCLUDED IN THE PRICE BID FOR VARIOUS OTHER ITEMS OF CONTRACT.
11. FOR JACKING NOTES SEE DWG. PR17-1S.

• PERFORM STRUCTURAL LIFTING UNDER ITEM 585.02M - STRUCTURAL LIFTING OPERATIONS - TYPE B (LIFTING AT A PIER) OR ITEM 585.03M - STRUCTURAL LIFTING OPERATIONS - TYPE C (LIFTING AT A PIER WHERE THE CONTRACTOR SHALL BE REQUIRED TO LIFT OFF THE FOOTING AND/OR GROUND LEVEL.

JACKING LOADS:

D.L. = 75 MT
L.L. = 50 MT
TOTAL = 125 MT

LEGEND:

ITEM 582.05M - REMOVAL OF STRUCTURAL CONCRETE- REPLACE WITH CLASS A CONCRETE (CM)

ITEM 582.07M - REMOVAL OF STRUCTURAL CONCRETE - REPLACE WITH VERTICAL OVER-HEAD PATCH MATERIAL. (SM)

ALL DIMENSIONS ARE IN mm UNLESS OTHERWISE NOTED

LIST OF ITEMS USED:

ITEM 15565.4302 - BRIDGE BEARING RESTORATION
ITEM 582.05M - REM. OF STRUC. CONC. - REPLACE WITH CLASS A CONCRETE (CM)
ITEM 582.07M - REM. OF STRUC. CONC. - REPL. W/ VERT. OVERHEAD PATCH MAT'L. (SM)
ITEM 585.02M - STRUCTURAL LIFTING OPERATIONS - TYPE B (EA)
ITEM 585.03M - STRUCTURAL LIFTING OPERATION - TYPE C (EA)

AS BUILT REVISIONS

SIGNATURE DATE

INTERSTATE 481 NB
OVER
CSX RAILROAD YARD
PIER 1

STATE OF NEW YORK
DEPARTMENT OF TRANSPORTATION

FILENAME	REGION	DATE	DRAWING NO.
305613AE.P1A	3	10/02	PR17-1N

DESIGN SUPERVISOR ____ JOB MANAGER ____ DESIGNED BY ____ CHECKED BY ____ ESTIMATED BY ____ DRAFTED BY ____ CHECKED BY ____

FED ROAD REG. NO.	STATE	CONTRACT NO.	SHEET NO.	TOTAL SHEETS
1	N.Y.	D259214	317	432

BRIDGE REHABILITAITON PROJECT (ELEMENT SPECIFIC)
VARIOUS BRIDGES ON INTERSTATE 481
TOWNS OF DEWITT AND CICERO
ONONDAGA COUNTY
P.I.N. 305613 B.I.N. 1093572

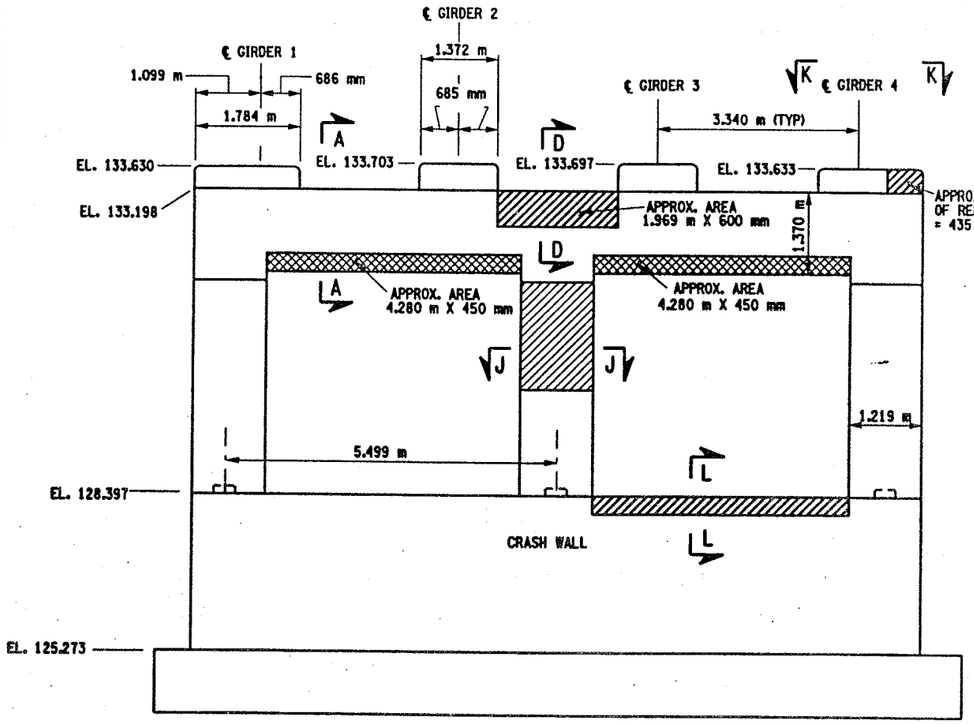

PIER 2 - FRONT FACE (LOOKING NORTH)
BIN 1093572
SCALE: 1 TO 50

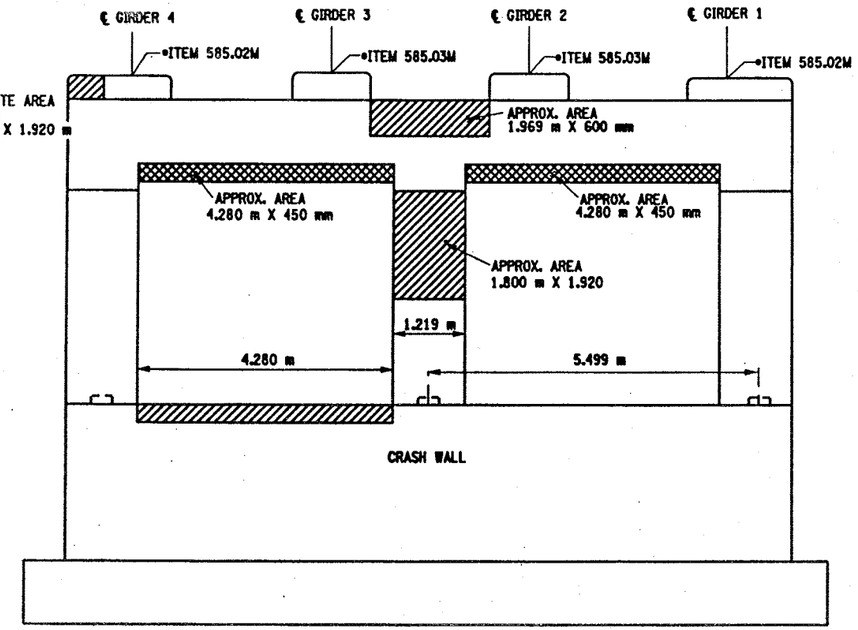

PIER 2- BACK FACE (LOOKING SOUTH)
BIN 1093572
SCALE: 1 TO 50

NOTES:

1. ALL REINFORCEMENT TO REMAIN.
2. RESTORE TO ORIGINAL DIMENSIONS.
3. PEDESTALS NUMERICALLY NUMBERED FROM WEST TO EAST.
4. FOR THE CONCRETE REPAIR AREAS, THE CONCRETE SHALL BE REMOVED TO AT LEAST 40mm MIN. BEYOND THE ENCOUNTERED REINFORCEMENT AND TO SOUND CONCRETE, A.O.B.E.
5. ELEVATIONS SHOWN ARE FROM ORIGINAL CONTRACT PLANS F.I.S.H. 70-7 AND ARE FOR REFERENCE ONLY.
6. REMOVAL DIMENSIONS SHOWN ON PLANS ARE ESTIMATED AND SHALL BE FIELD VERIFIED BY THE CONTRACTOR PRIOR TO BEGINNING OF REMOVAL OPERATIONS A.O.B.E.
7. PERFORM BEARING RESTORATION TO ALL EXPANSION BEARINGS (TO INCLUDE RESETTING OF UNDEREXTENDED OR OVEREXTENDED BEARINGS). SEE DWG. BR-10 & BR-11 FOR BEARING RESTORATION DETAILS. SEE DWG PR17-1S FOR BEARING RESTORATION NOTES.
8. SEE DWG. PR17-2S FOR SECTION A-A, D-D AND DETAIL "A".
9. ALL CONCRETE REMOVAL SHALL BE SAWCUT TO PRODUCE NEAT REMOVAL LINES. COST TO BE INCLUDED IN THE PROCE BID FOR ITEM 582.05M AND ITEM 582.07M.
10. FOR JACKING NOTES SEE DWG. PR17-1S
11. CONTRACTOR SHALL REMOVE DEBRIS FROM TOP OF PEDESTALS AND TOP OF CAP BEAM. COST TO BE INCLUDED IN THE PRICE BID FOR VARIOUS OTHER ITEMS OF CONTRACT.

• PERFORM STRUCTURAL LIFTING UNDER ITEM 585.02M - STRUCTURAL LIFTING OPERATIONS - TYPE B (LIFTING AT A PIER) OR ITEM 585.03M - STRUCTURAL LIFTING OPERATIONS - TYPE C (LIFTING AT A PIER WHERE THE CONTRACTOR SHALL BE REQUIRED TO LIFT OFF THE FOOTING AND/OR GROUND LEVEL.

JACKING LOADS:

D.L. = 75 MT
L.L. = 50 MT
TOTAL = 125 MT

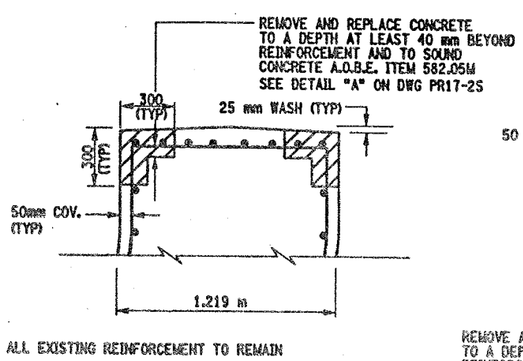

SECTION L-L
NOT TO SCALE

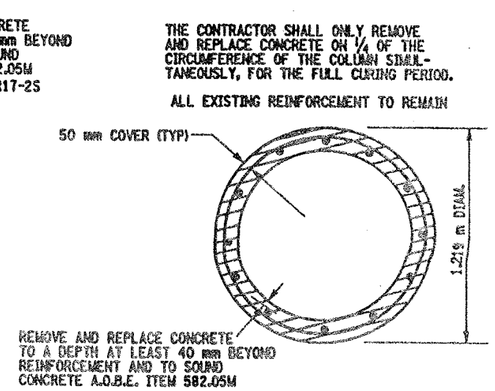

SECTION J-J
NOT TO SCALE

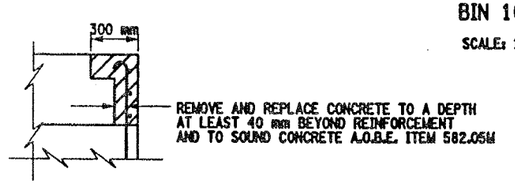

SECTION M-M
NOT TO SCALE

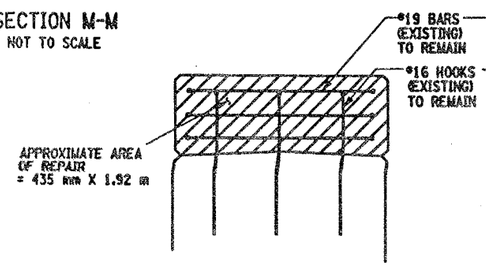

SECTION N-N
NOT TO SCALE

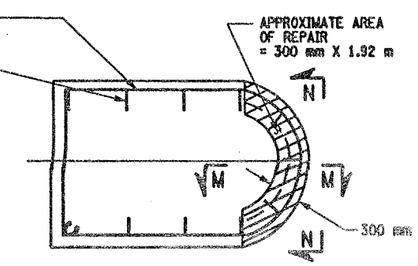

SECTION K-K
NOT TO SCALE

LEGEND:

ITEM 582.05M - REMOVAL OF STRUCTURAL CONCRETE- REPLACE WITH CLASS A CONCRETE (CM)

ITEM 582.07M - REMOVAL OF STRUCTURAL CONCRETE - REPLACE WITH VERTICAL OVER-HEAD PATCH MATERIAL. (SM)

LIST OF ITEMS USED:

ITEM 15565.4302M - BRIDGE BEARING RESTORATION (EA)
ITEM 582.05M - REM. OF STRUC. CONC. - REPLACE WITH CLASS A CONCRETE (CM)
ITEM 582.07M - REM. OF STRUC. CONC. - REPL. W/ VERT. OVERHEAD PATCH MAT.L (SM)
ITEM 585.02M - STRUCTURAL LIFTING OPERATIONS - TYPE B (EA)
ITEM 585.03M - STRUCTURAL LIFTING OPERATION - TYPE C (EA)

ALL DIMENSIONS ARE IN mm UNLESS OTHERWISE NOTED

AS BUILT REVISIONS

SIGNATURE DATE

INTERSTATE 481 NB
OVER
CSX RAILROAD YARD
PIER 2

STATE OF NEW YORK
DEPARTMENT OF TRANSPORTATION

FILENAME	REGION	DATE	DRAWING NO.
305613AE.P2A	3	10/02	PR17-2N

DESIGN SUPERVISOR ____ JOB MANAGER ____ DESIGNED BY ____ CHECKED BY ____ ESTIMATED BY ____ DRAFTED BY ____ CHECKED BY ____

FED ROAD REG. NO.	STATE	CONTRACT NO.	SHEET NO.	TOTAL SHEETS
1	N.Y.	D259214	318	432

BRIDGE REHABILITATION PROJECT (ELEMENT SPECIFIC)
VARIOUS BRIDGES ON INTERSTATE 481
TOWNS OF DEWITT AND CICERO
ONONDAGA COUNTY
P.I.N. 305613 B.I.N. 1093572

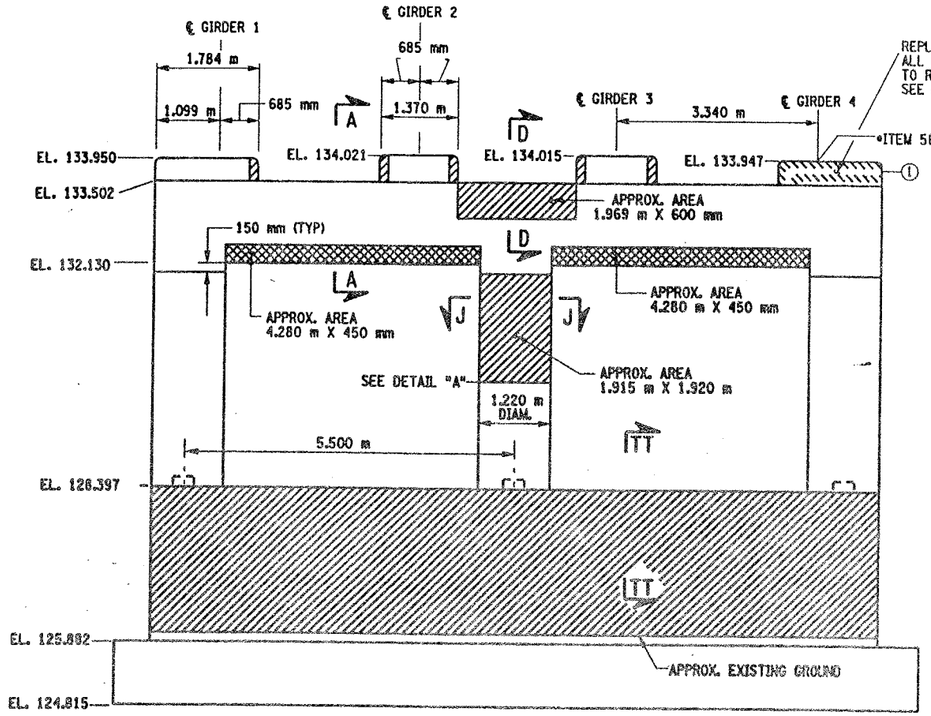

PIER 3 - FRONT FACE (LOOKING NORTH)
BIN 1093572
SCALE: 1 TO 50

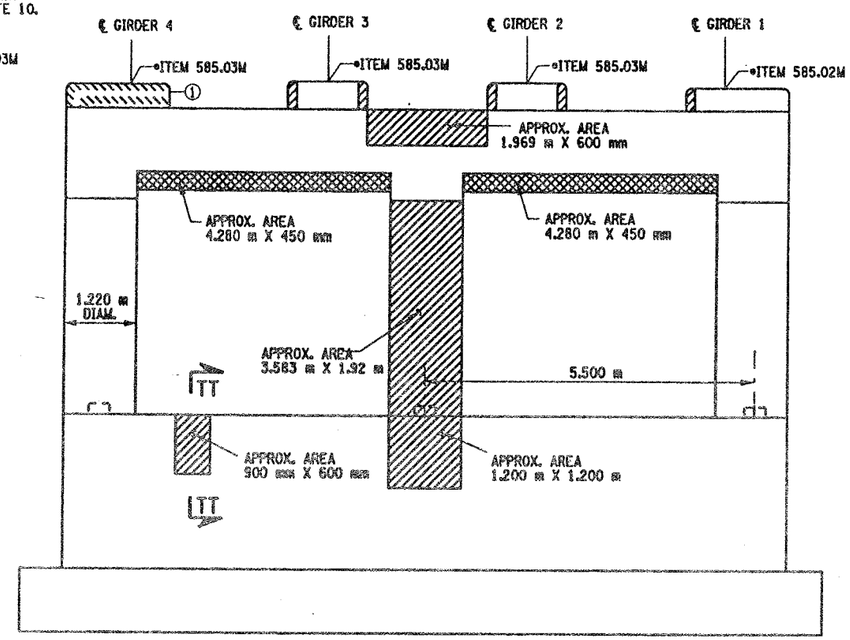

PIER 3 - BACK FACE (LOOKING SOUTH)
BIN 1093572
SCALE: 1 TO 50

○— INDICATES CONCRETE PLACEMENT NUMBER

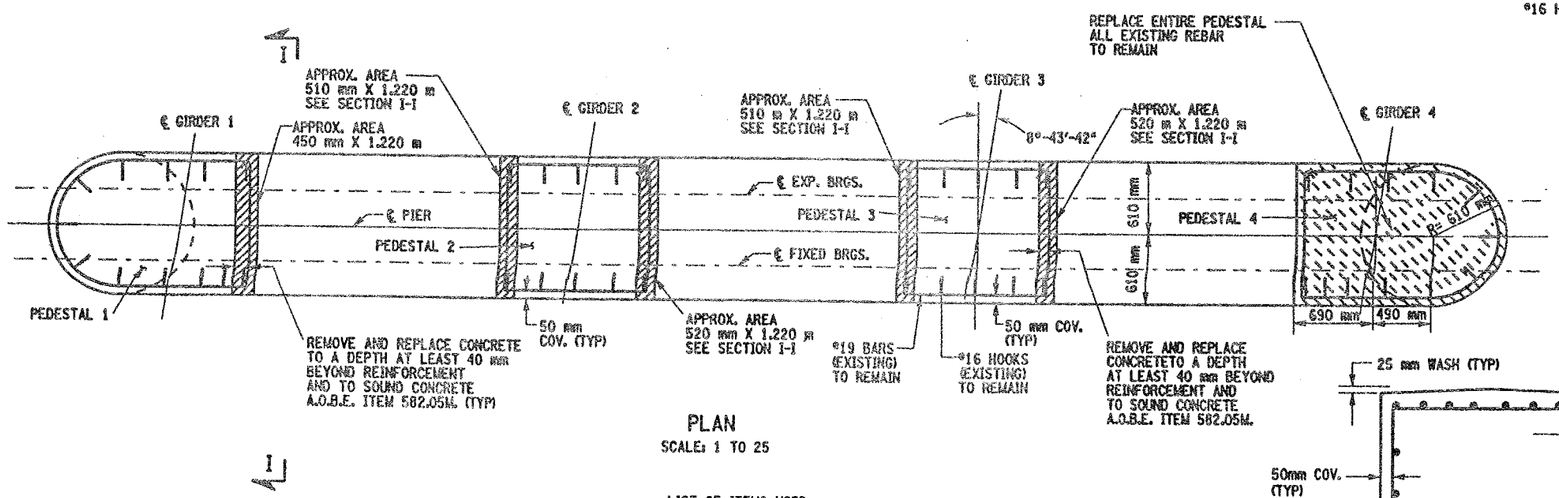

PLAN
SCALE: 1 TO 25

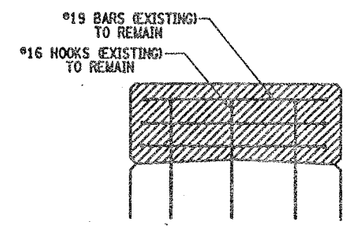

SECTION I-I
NOT TO SCALE

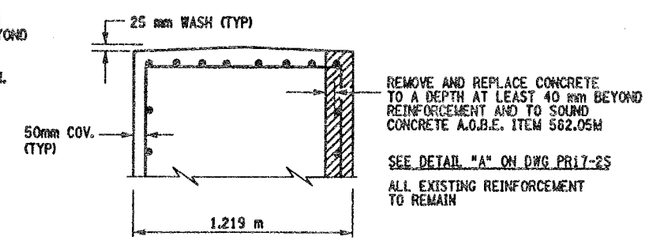

SECTION TT-TT
NOT TO SCALE

CONCRETE TABLE (m³)		
PLACEMENT	QUANTITY	ITEM NO.
1	0.90	555.0105M

LIST OF ITEMS USED:

ITEM 15565.4302M - BRIDGE BEARING RESTORATION (EA)
ITEM 555.0105M - CONCRETE FOR STRUCTURES CLASS A (CM)
ITEM 580.01M - REMOVAL OF STRUCTURAL CONCRETE (CM)
ITEM 582.05M - REM. OF STRUC. CONC. - REPLACE WITH CLASS A CONCRETE (CM)
ITEM 582.07M - REM. OF STRUC. CONC. - REPL. W/ VERT. OVERHEAD PATCH MAT.L (SM)
ITEM 585.02M - STRUCTURAL LIFTING OPERATIONS - TYPE B (EA)
ITEM 585.03M - STRUCTURAL LIFTING OPERATION - TYPE C (EA)

NOTES:

1. ALL REINFORCEMENT TO REMAIN.
2. RESTORE TO ORIGINAL DIMENSIONS.
3. PEDESTALS NUMERICALLY NUMBERED FROM WEST TO EAST.
4. FOR THE CONCRETE REPAIR AREAS, THE CONCRETE SHALL BE REMOVED TO AT LEAST 40mm MIN. BEYOND THE ENCOUNTERED REINFORCEMENT AND TO SOUND CONCRETE, A.O.B.E.
5. ELEVATIONS SHOWN ARE FROM ORIGINAL CONTRACT PLANS F.I.S.H. 70-7 AND ARE FOR REFERENCE ONLY.
6. REMOVAL DIMENSIONS SHOWN ON PLANS ARE ESTIMATED AND SHALL BE FIELD VERIFIED BY THE CONTRACTOR PRIOR TO BEGINNING OF REMOVAL OPERATIONS A.O.B.E.
7. PERFORM BEARING RESTORATION TO ALL EXPANSION BEARINGS (TO INCLUDE RESETTING OF UNDEREXTENDED OR OVEREXTENDED BEARINGS). SEE DWG BR-10 & BR-11 FOR BEARING RESTORATION DETAILS. SEE DWG. PR17-1S FOR BEARING RESTORATION NOTES.
8. SEE DWG. PR17-2S FOR SECTIONS A-A, D-D AND DETAIL "A"
9. SEE DWG. PR17-2N FOR SECTION J-J
10. PEDESTAL 4 SHALL BE REPLACED TO EXISTING DIMENSIONS. ITEM 555.0105 M
11. ALL CONCRETE REMOVAL SHALL BE SAWCUT TO PRODUCE NEAT REMOVAL LINES. COST TO BE INCLUDED IN THE PRICE BID FOR ITEM 582.05M AND ITEM 582.07M.
12. FOR JACKING NOTES SEE DWG. PR17-1S
13. CONTRACTOR SHALL REMOVE DEBRIS FROM TOP OF PEDESTALS AND TOP OF CAPBEAM. COST TO BE INCLUDED IN THE PRICE BID FOR VARIOUS OTHER ITEMS OF CONTRACT.

• PERFORM STRUCTURAL LIFTING UNDER ITEM 585.02M - STRUCTURAL LIFTING OPERATIONS - TYPE B (LIFTING AT A PIER) OR ITEM 585.03M - STRUCTURAL LIFTING OPERATIONS - TYPE C (LIFTING AT A PIER WHERE THE CONTRACTOR SHALL BE REQUIRED TO LIFT OFF THE FOOTING AND/OR GROUND LEVEL.

JACKING LOADS:

D.L. = 100 MT
L.L. = 50 MT
TOTAL = 150 MT

LEGEND:

ITEM 582.05M - REMOVAL OF STRUCTURAL CONCRETE- REPLACE WITH CLASS A CONCRETE (CM)

ITEM 582.07M - REMOVAL OF STRUCTURAL CONCRETE - REPLACE WITH VERTICAL OVER-HEAD PATCH MATERIAL. (SM)

ITEM 580.01 M - REMOVAL OF STRUCTURAL CONCRETE. (CM) AND ITEM 555.0105 M - CONCRETE FOR STRUCTURES CLASS A. (CM)

ALL DIMENSIONS ARE IN mm UNLESS OTHERWISE NOTED

AS BUILT REVISIONS

SIGNATURE DATE

INTERSTATE 401 NB
OVER
CSX RAILROAD YARD
PIER 3

STATE OF NEW YORK
DEPARTMENT OF TRANSPORTATION

FILENAME	REGION	DATE	DRAWING NO.
305613AE.P3A	3	10/02	PR17-3N

DESIGN SUPERVISOR ____ JOB MANAGER ____ DESIGNED BY ____ CHECKED BY ____ ESTIMATED BY ____ DRAFTED BY ____ CHECKED BY ____

FED ROAD REG. NO.	STATE	CONTRACT NO.	SHEET NO.	TOTAL SHEETS
1	N.Y.	D259214	319	432

BRIDGE REHABILITATION PROJECT (ELEMENT SPECIFIC)
VARIOUS BRIDGES ON INTERSTATE 481
TOWNS OF DEWITT AND CICERO
ONONDAGA COUNTY
P.I.N. 305613 B.I.N. 1093572

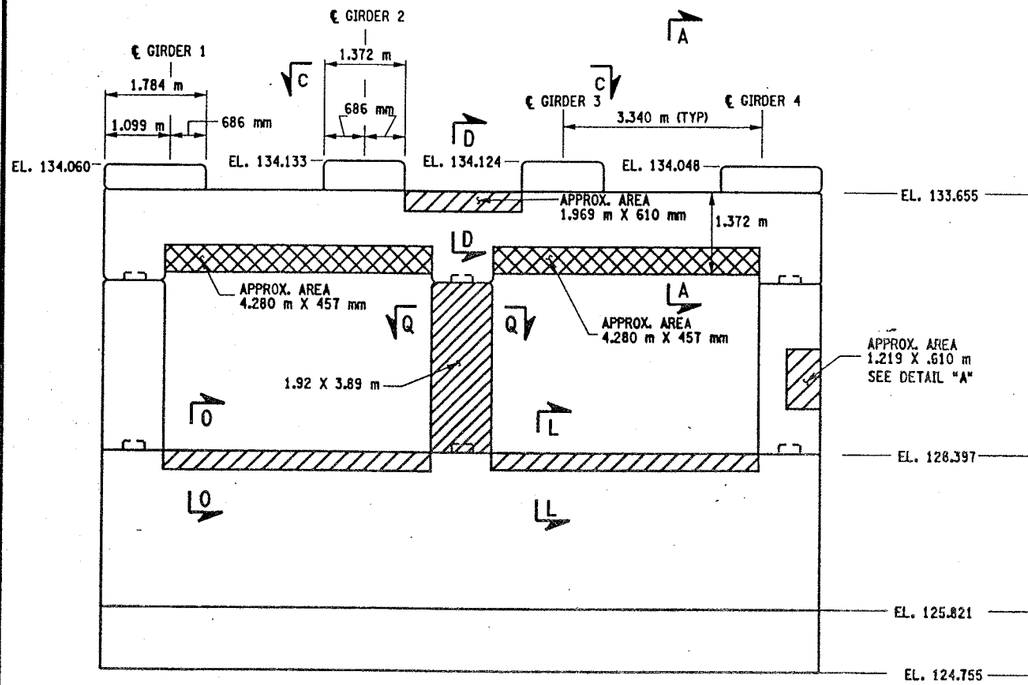

PIER 4 - FRONT FACE (LOOKING NORTH)
BIN 1093572
SCALE: 1 TO 50

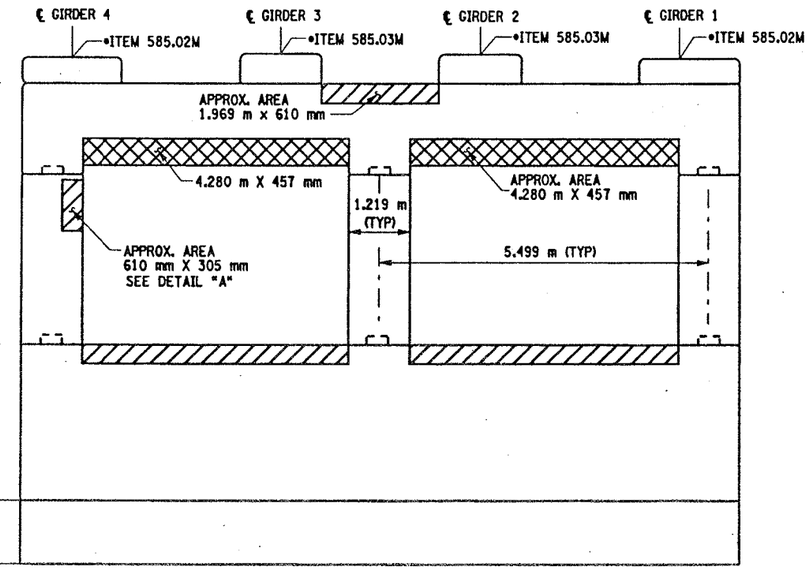

PIER 4 - BACK FACE (LOOKING SOUTH)
BIN 1093572
SCALE: 1 TO 50

NOTES:

1. ALL REINFORCEMENT TO REMAIN.
2. RESTORE TO ORIGINAL DIMENSIONS.
3. PEDESTALS NUMERICALLY NUMBERED FROM WEST TO EAST.
4. FOR THE CONCRETE REPAIR AREAS, THE CONCRETE SHALL BE REMOVED TO AT LEAST 40mm MIN. BEYOND THE ENCOUNTERED REINFORCEMENT AND TO SOUND CONCRETE, A.O.B.E.
5. ELEVATIONS SHOWN ARE FROM ORIGINAL CONTRACT PLANS F.I.S.H. 70-7 AND ARE FOR REFERENCE ONLY.
6. REMOVAL DIMENSIONS SHOWN ON PLANS ARE ESTIMATED AND SHALL BE FIELD VERIFIED BY THE CONTRACTOR AND ENGINEER PRIOR TO BEGINNING OF REMOVAL OPERATIONS A.O.B.E.
7. PERFORM BEARING RESTORATION TO ALL EXPANSION BEARINGS (TO INCLUDE RESETTING OF UNDEREXTENDED OR OVEREXTENDED BEARINGS). SEE DWG. BR-10 AND BR-11 FOR BEARING RESTORATION DETAILS. SEE DWG. PR17-1S FOR BEARING RESTORATION NOTES.
8. SEE DWG. PR17-2S FOR SECTIONS A-A, D-D AND DETAIL "A".
9. SEE DWG. PR17-4S FOR SECTION O-O.
10. SEE DWG. PR17-2N FOR SECTION L-L.
11. ALL CONCRETE REMOVAL SHALL BE SAWCUT TO PRODUCE NEAT REMOVAL LILNES. COST TO BE INCLUDED IN THE PRICE BID FOR ITEM 582.05M AND ITEM 582.07M.
12. FOR JACKING NOTES SEE DWG PR17-1S.
13. CONTRACTOR SHALL REMOVE DEBRIS FROM TOP OF PEDESTALS AND TOP OF CAP BEAM. COST TO BE INCLUDED IN THE PRICE BID FOR VARIOUS OTHER ITEMS OF CONTRACT.

• PERFORM STRUCTURAL LIFTING UNDER ITEM 585.02M - STRUCTURAL LIFTING OPERATIONS - TYPE B (LIFTING AT A PIER) OR ITEM 585.03M - STRUCTURAL LIFTING OPERATIONS - TYPE C (LIFTING AT A PIER WHERE THE CONTRACTOR SHALL BE REQUIRED TO LIFT OFF THE FOOTING AND/OR GROUND LEVEL.

JACKING LOADS:

D.L. = 100 MT
L.L. = 50 MT
TOTAL = 150 MT

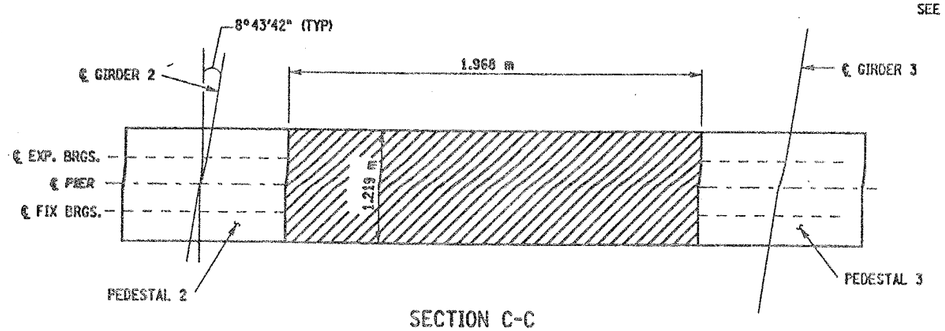

SECTION C-C
NOT TO SCALE

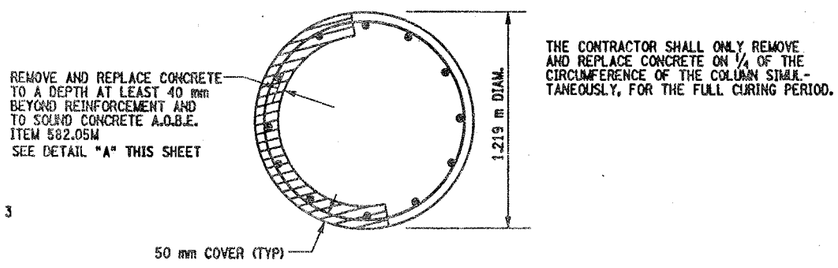

THE CONTRACTOR SHALL ONLY REMOVE AND REPLACE CONCRETE ON 1/4 OF THE CIRCUMFERENCE OF THE COLUMN SIMULTANEOUSLY, FOR THE FULL CURING PERIOD.

SECTION Q-Q
NOT TO SCALE

LEGEND:

ITEM 582.05M - REMOVAL OF STRUCTURAL CONC. REPLACE WITH CLASS A CONCRETE (CM)

ITEM 582.07M - REMOVAL OF STRUCTURAL CONCRETE - REPLACE WITH VERTICAL OVERHEAD PATCH MATERIAL. (SM)

ALL DIMENSIONS ARE IN mm UNLESS OTHERWISE NOTED

LIST OF ITEMS USED:

ITEM 15565.4302M - BRIDGE BEARING RESTORATION (EA)
ITEM 582.05M - REM. OF STRUC. CONC. - REPLACE WITH CLASS A CONCRETE (CM)
ITEM 582.07M - REM. OF STRUC. CONC. - REPL. W/VERT. OVERHEAD PATCH MAT.L (SM)
ITEM 585.02M - STRUCTURAL LIFTING OPERATIONS - TYPE B (EA)
ITEM 585.03M - STRUCTURAL LIFTING OPERATION - TYPE C (EA)

AS BUILT REVISIONS

SIGNATURE DATE

INTERSTATE 481 NB
OVER
CSX RAILROAD
PIER 4

STATE OF NEW YORK
DEPARTMENT OF TRANSPORTATION

FILENAME	REGION	DATE	DRAWING NO.
305613AE.P4A	3	10/02	PR17-4N

DESIGN SUPERVISOR ____ JOB MANAGER ____ DESIGNED BY ____ CHECKED BY ____ ESTIMATED BY ____ DRAFTED BY ____ CHECKED BY ____

FED ROAD REG. NO.	STATE	CONTRACT NO.	SHEET NO.	TOTAL SHEETS
1	N.Y.	D259214	320	432

BRIDGE REHABILITATION PROJECT (ELEMENT SPECIFIC)
VARIOUS BRIDGES ON INTERSTATE 481
TOWNS OF DEWITT AND CICERO
ONONDAGA COUNTY
P.I.N. 305613 | B.I.N. 1093572

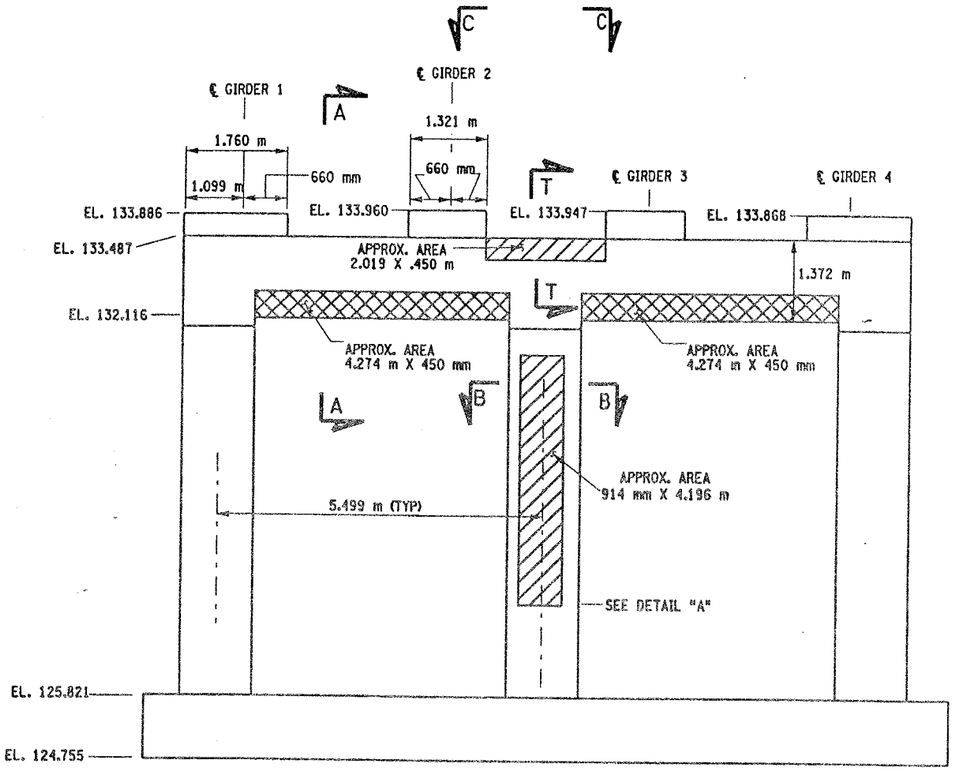

PIER 5 - FRONT FACE (LOOKING NORTH)
BIN 1093572
SCALE: 1 TO 50

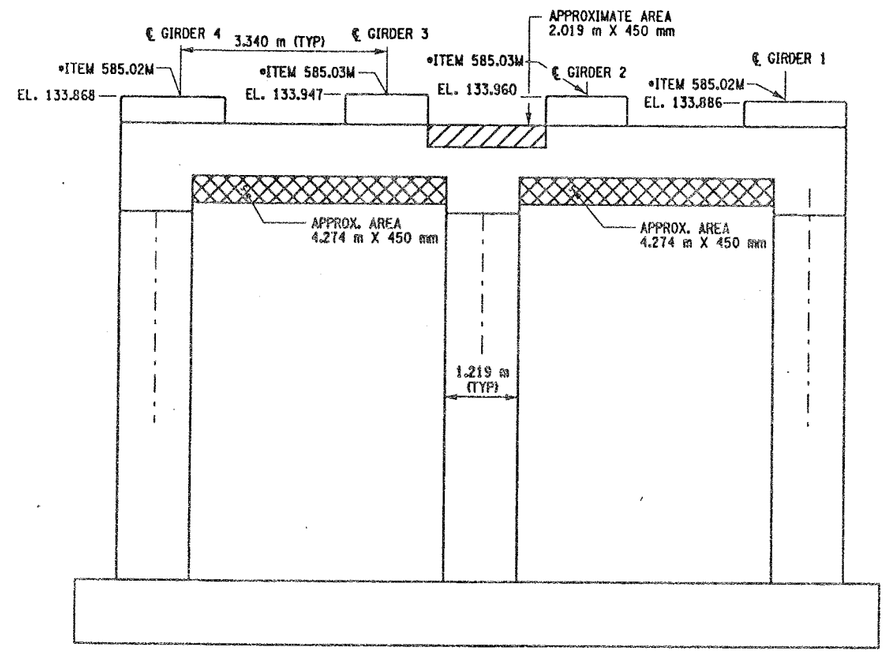

PIER 5 - BACK FACE (LOOKING SOUTH)
BIN 1093572
SCALE: 1 TO 50

NOTES:

1. ALL REINFORCEMENT TO REMAIN.
2. RESTORE TO ORIGINAL DIMENSIONS.
3. PEDESTALS NUMERICALLY NUMBERED FROM WEST TO EAST.
4. FOR THE CONCRETE REPAIR AREAS, THE CONCRETE SHALL BE REMOVED TO AT LEAST 40mm MIN. BEYOND THE ENCOUNTERED REINFORCEMENT AND TO SOUND CONCRETE, A.O.B.E.
5. ELEVATIONS SHOWN ARE FROM ORIGINAL CONTRACT PLANS F.I.S.H. 70-7 AND ARE FOR REFERENCE ONLY.
6. REMOVAL DIMENSIONS SHOWN ON PLANS ARE ESTIMATED AND SHALL BE FIELD VERIFIED BY THE CONTRACTOR AND ENGINEER PRIOR TO BEGINNING OF REMOVAL OPERATIONS A.O.B.E.
7. PERFORM BEARING RESTORATION TO ALL EXPANSION BEARINGS (TO INCLUDE RESETTING OF UNDEREXTENDED OR OVEREXTENDED BEARINGS). SEE DWG. BR-10 & BR-11 FOR BEARING RESTORATION DETAILS. SEE DWG. PR17-1S FOR BEARING RESTORATION NOTES.
8. SEE DWG. PR17-2S FOR SECTION A-A AND B-B AND DETAIL "A".
9. SEE DWG PR17-1S FOR SECTION C-C.
10. ALL CONCRET REMOVAL SHALL BE SAWCUT TO PRODUCE NEAT REMOVAL LINES. COST TO BE INCLUDED IN THE PRICE BID FOR ITEM 582.05M AND ITEM 582.07M.
11. FOR JACKING NOTES SEE DWG. PR17-1S.
12. CONTRACTOR SHALL REMOVE DEBRIS FROM TOP OF CAP BEAM. COST TO BE INCLUDED IN THE PRICE BID FOR VARIOUS ITEMS OF CONTRACT.

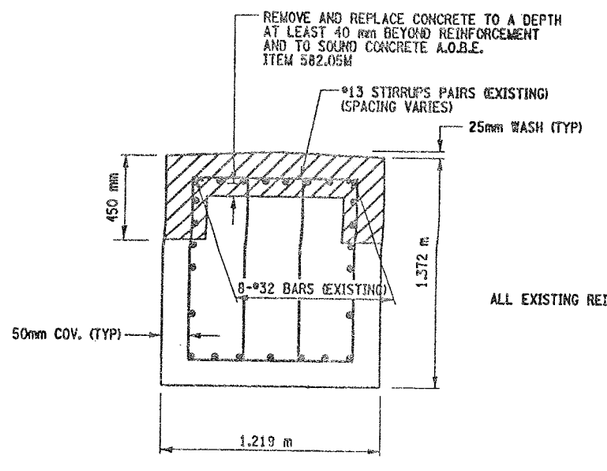

SECTION T-T
NOT TO SCALE

ALL EXISTING REINFORCEMENT TO REMAIN

• PERFORM STRUCTURAL LIFTING UNDER ITEM 585.02M - STRUCTURAL LIFTING OPERATIONS - TYPE B (LIFTING AT A PIER) OR ITEM 585.03M - STRUCTURAL LIFTING OPERATIONS - TYPE C (LIFTING AT A PIER WHERE THE CONTRACTOR SHALL BE REQUIRED TO LIFT OFF THE FOOTING AND/OR GROUND LEVEL.

JACKING LOADS:

D.L. = 100 MT
L.L. = 50 MT
TOTAL = 150 MT

LIST OF ITEMS USED:
ITEM 15565.4302M - BRIDGE BEARING RESTORATION (EA)
ITEM 582.05M - REM. OF STRUC. CONC. - REPLACE WITH CLASS A CONCRETE (CM)
ITEM 582.07M - REM. OF STRUC. CONC. - REPL. W/ VERT. OVERHEAD PATCH MAT'L (SM)
ITEM 585.02M - STRUCTURAL LIFTING OPERATIONS - TYPE B (EA)
ITEM 585.03M - STRUCTURAL LIFTING OPERATION - TYPE C (EA)

LEGEND:

ITEM 582.05M - REMOVAL OF STRUCTURAL CONCRETE- REPLACE WITH CLASS A CONCRETE (CM)

ITEM 582.07M - REMOVAL OF STRUCTURAL CONCRETE - REPLACE WITH VERTICAL OVER-HEAD PATCH MATERIAL. (SM)

ALL DIMENSIONS ARE IN mm UNLESS OTHERWISE NOTED

AS BUILT REVISIONS

SIGNATURE | DATE

INTERSTATE 481 NB
OVER
CSX RAILROAD YARD
PIER 5

STATE OF NEW YORK
DEPARTMENT OF TRANSPORTATION

FILENAME	REGION	DATE	DRAWING NO.
305613AE.P5A	3	10/02	PR17-5N

DESIGN SUPERVISOR ____ JOB MANAGER ____ DESIGNED BY ____ ESTIMATED BY ____ DRAFTED BY ____ CHECKED BY ____ CHECKED BY ____

FED ROAD REG. NO.	STATE	CONTRACT NO.	SHEET NO.	TOTAL SHEETS
1	N.Y.	D259214	321	432

BRIDGE REHABILITATION PROJECT (ELEMENT SPECIFIC)
VARIOUS BRIDGES ON INTERSTATE 481
TOWNS OF DEWITT AND CICERO
ONONDAGA COUNTY
P.I.N. 305613 B.I.N. 1093572

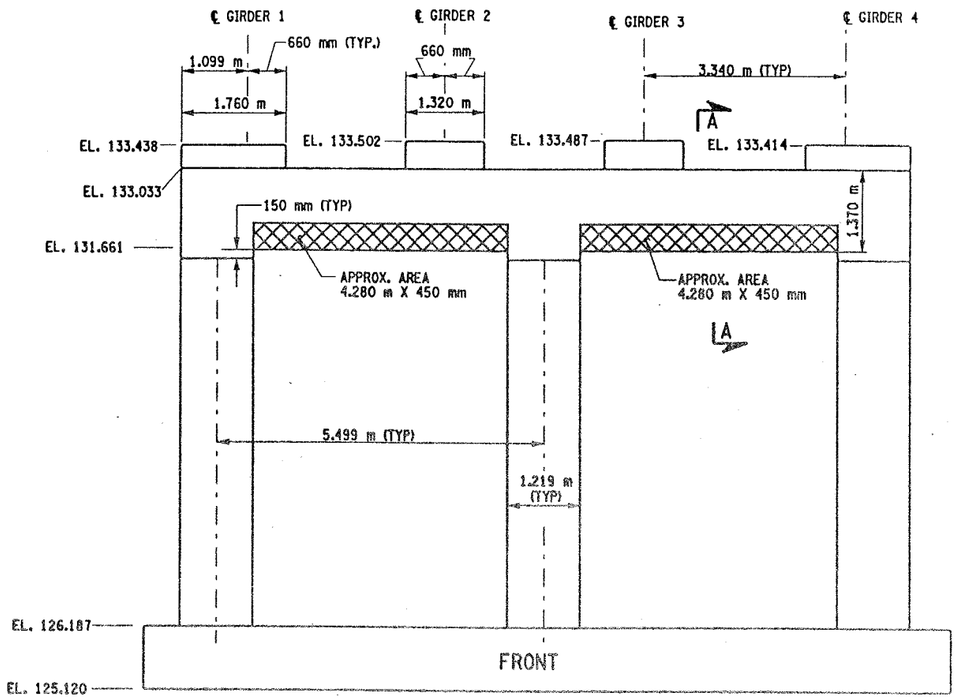

PIER 6 -FRONT FACE (LOOKING NORTH)

BIN 1093572

SCALE: 1 TO 50

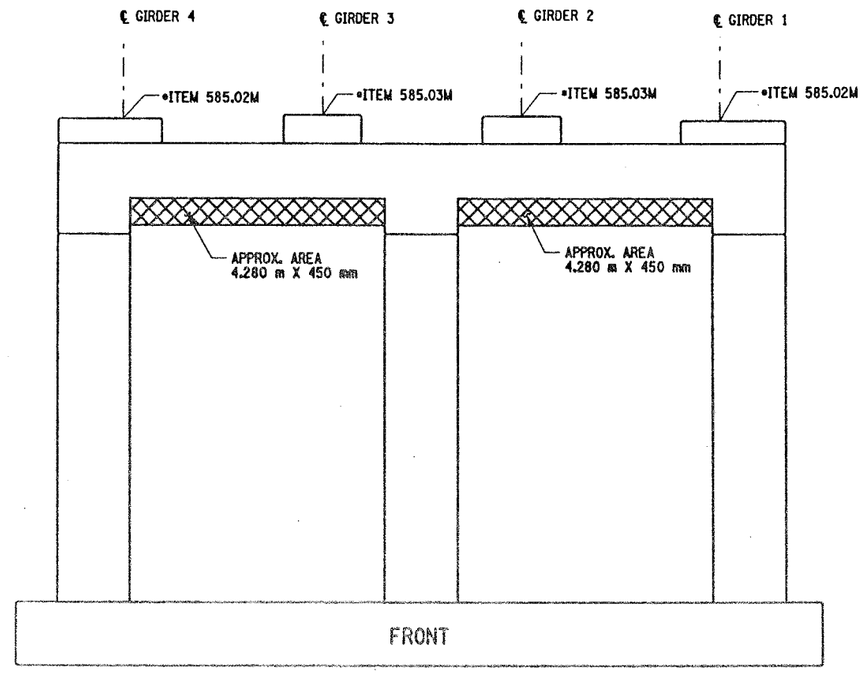

PIER 6 BACK FACE (LOOKING SOUTH)

BIN 1093572

SCALE: 1 TO 50

NOTES:

1. ALL REINFORCEMENT TO REMAIN.
2. RESTORE TO ORIGINAL DIMENSIONS.
3. PEDESTALS NUMERICALLY NUMBERED FROM WEST TO EAST.
4. FOR THE CONCRETE REPAIR AREAS, THE CONCRETE SHALL BE REMOVED TO AT LEAST 40mm MIN. BEYOND THE ENCOUNTERED REINFORCEMENT AND TO SOUND CONCRETE, A.O.B.E.
5. ELEVATIONS SHOWN ARE FROM ORIGINAL CONTRACT PLANS F.I.S.H. 70-7 AND ARE FOR REFERENCE ONLY.
6. REMOVAL DIMENSIONS SHOWN ON PLANS ARE ESTIMATED AND SHALL BE FIELD VERIFIED BY THE CONTRACTOR AND ENGINEER PRIOR TO BEGINNING OF REMOVAL OPERATIONS A.O.B.E.
7. ~~PERFORM BEARING RESTORATION TO ALL EXPANSION BEARINGS (TO INCLUDE RESETTING OF UNDEREXTENDED OR OVEREXTENDED BEARINGS). SEE DWG. BR-10 & BR-11 FOR BEARING RESTORATION DETAILS. SEE DWG. PR17-1S FOR BEARING RESTORATION NOTES.~~
8. SEE DWG. PR17-2S FOR SECTION "A-A".
9. ALL CONCRETE REMOVAL SHALL BE SAWCUT TO PRODUCE NEAT REMOVAL LINES. COST TO BE INCLUDED IN THE PRICE BID FOR ITEM 582.05M AND 582.07M.
10. FOR JACKING NOTES SEE DWG. PR17-1S.

• PERFORM STRUCTURAL LIFTING UNDER ITEM 585.02M - STRUCTURAL LIFTING OPERATIONS - TYPE B (LIFTING AT A PIER) OR ITEM 585.03M - STRUCTURAL LIFTING OPERATIONS - TYPE C (LIFTING AT A PIER WHERE THE CONTRACTOR SHALL BE REQUIRED TO LIFT OFF THE FOOTING AND/OR GROUND LEVEL.

JACKING LOADS:

D.L. = 75 MT
L.L. = 50 MT
TOTAL = 125 MT

LEGEND

ITEM 582.07M - REMOVAL OF STRUCTURAL CONCRETE - REPLACE WITH VERTICAL OVERHEAD PATCH MATERIAL. (SM)

LIST OF ITEMS USED:

ITEM 15565.4302M- BRIDGE BEARING RESTORATION (EA)
ITEM 582.07M - REM. OF STRUC. CONC. - REPL. W/ VERT. OVERHEAD PATCH MAT'L (SM)
ITEM 585.02M - STRUCTURAL LIFTING OPERATIONS - TYPE B (EA)
ITEM 585.03M - STRUCTURAL LIFTING OPERATION - TYPE C (EA)

ALL DIMENSIONS ARE IN mm UNLESS OTHERWISE NOTED

AS BUILT REVISIONS

SIGNATURE DATE

INTERSTATE 481 NB
OVER
CSX RAILROAD YARD
PIER 6

STATE OF NEW YORK
DEPARTMENT OF TRANSPORTATION

FILENAME	REGION	DATE	DRAWING NO.
305613AE.P6A	3	10/02	PR17-6N

DESIGN SUPERVISOR ____ JOB MANAGER ____ DESIGNED BY ____ CHECKED BY ____ ESTIMATED BY ____ DRAFTED BY ____ CHECKED BY ____

FED ROAD REG. NO.	STATE	CONTRACT NO.	SHEET NO.	TOTAL SHEETS
1	N.Y.	D259214	322	432

BRIDGE REHABILITATION PROJECT (ELEMENT SPECIFIC)
VARIOUS BRIDGES ON INTERSTATE 481
TOWNS OF DEWITT AND CICERO
ONONDAGA COUNTY
P.I.N. 305613 B.I.N. 1093572

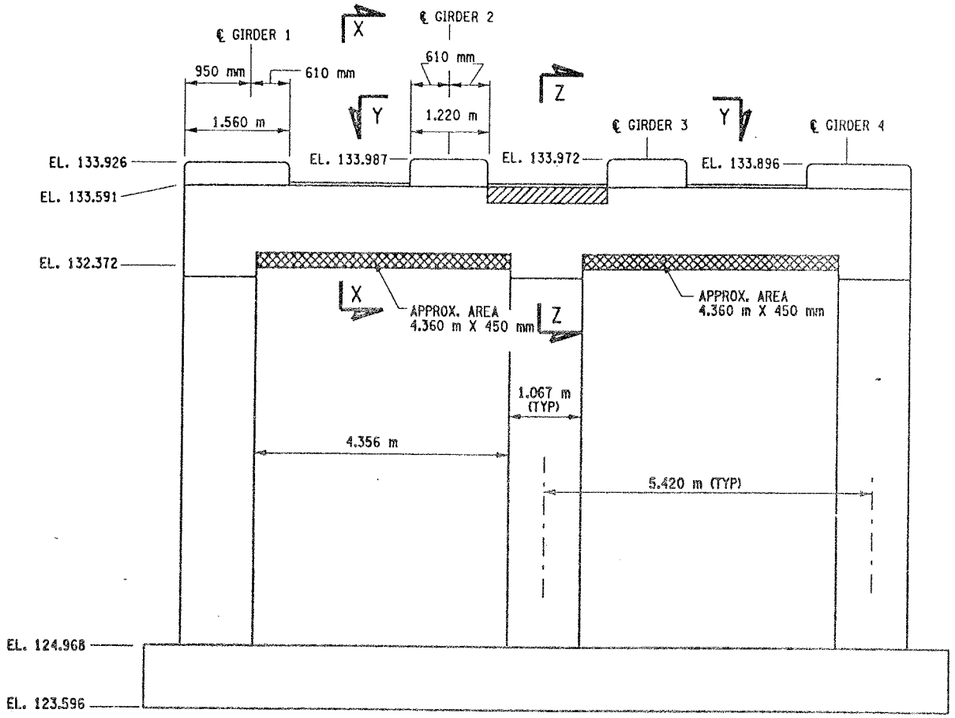

PIER 7 - FRONT FACE (LOOKING NORTH)
BIN 1093572
SCALE: 1 TO 50

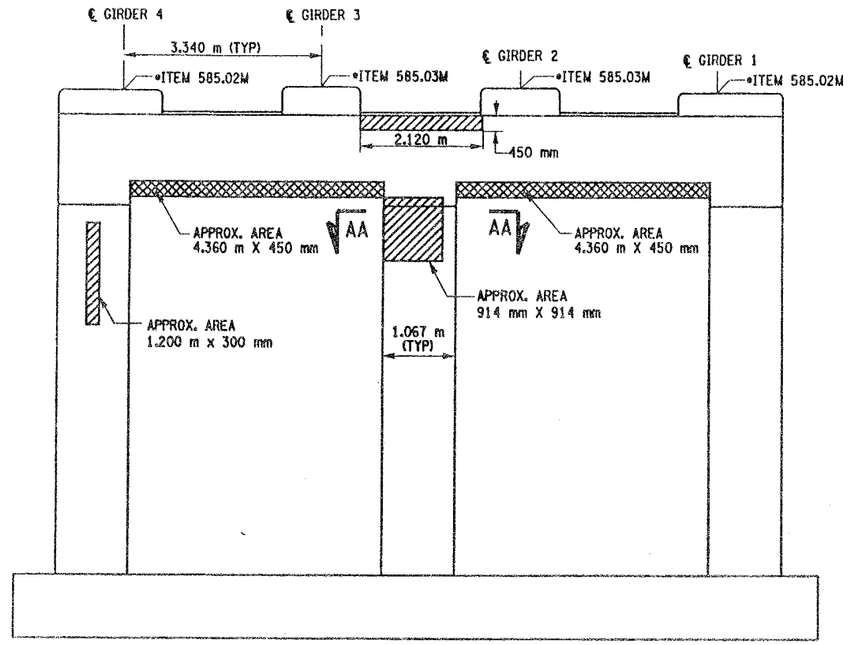

PIER 7 - BACK FACE (LOOKING SOUTH)
BIN 1093572
SCALE: 1 TO 50

NOTES:

1. ALL REINFORCEMENT TO REMAIN.
2. RESTORE TO ORIGINAL DIMENSIONS.
3. PEDESTALS NUMERICALLY NUMBERED FROM WEST TO EAST.
4. FOR THE CONCRETE REPAIR AREAS, THE CONCRETE SHALL BE REMOVED TO AT LEAST 40mm MIN. BEYOND THE ENCOUNTERED REINFORCEMENT AND TO SOUND CONCRETE, A.O.B.E.
5. ELEVATIONS SHOWN ARE FROM ORIGINAL CONTRACT PLANS F.I.S.H. 70-7 AND ARE FOR REFERENCE ONLY.
6. REMOVAL DIMENSIONS SHOWN ON PLANS ARE ESTIMATED AND SHALL BE FIELD VERIFIED BY THE CONTRACTOR PRIOR TO BEGINNING OF REMOVAL OPERATIONS A.O.B.E.
7. PERFORM BEARING RESTORATION TO ALL EXPANSION BEARINGS (TO INCLUDE RESETTING OF UNDEREXTENDED OR OVEREXTENDED BEARINGS). SEE DWG. PR17-1S FOR BEARING RESTORATION NOTES. SEE DWG. BR-10 & BR-11 FOR BEARING RESTORATION DETAILS.
8. ALL CONCRETE REMOVAL SHALL BE SAWCUT TO PRODUCE NEAT REMOVAL LINES. COST TO BE INCLUDED IN THE PRICE BID FOR ITEM 582.05M AND 582.07M.
9. FOR JACKING NOTES SEE DWG PR17-1S.

• PERFORM STRUCTURAL LIFTING UNDER ITEM 585.02M - STRUCTURAL LIFTING OPERATIONS - TYPE B (LIFTING AT A PIER) OR ITEM 585.03M - STRUCTURAL LIFTING OPERATIONS - TYPE C (LIFTING AT A PIER WHERE THE CONTRACTOR SHALL BE REQUIRED TO LIFT OFF THE FOOTING AND/OR GROUND LEVEL.

JACKING LOADS:

D.L. = 75 MT
L.L. = 50 MT
TOTAL = 125 MT

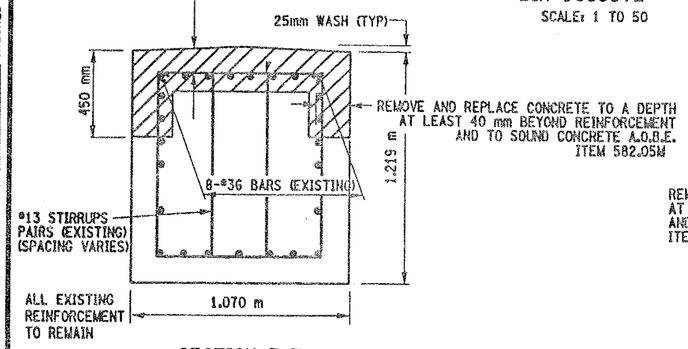

SECTION Z-Z
NOT TO SCALE

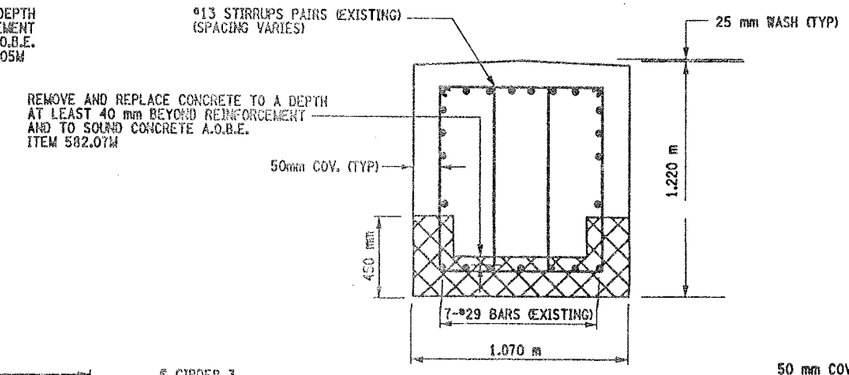

ALL EXISTING REINFORCEMENT TO REMAIN

SECTION X-X
NOT TO SCALE

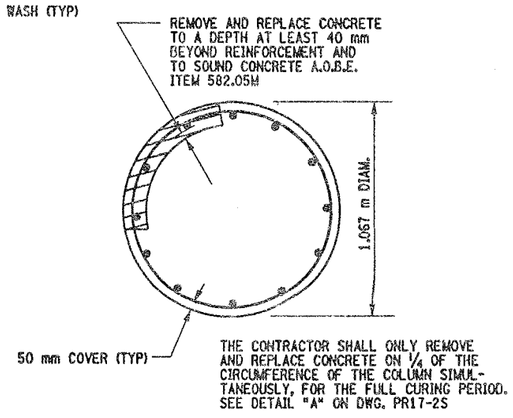

SECTION AA-AA

NOT TO SCALE

LEGEND:

ITEM 582.05M - REMOVAL OF STRUCTURAL CONCRETE- REPLACE WITH CLASS A CONCRETE. (CM)

ITEM 582.07M - REMOVAL OF STRUCTURAL CONCRETE - REPLACE WITH VERTICAL OVERHEAD PATCH MATERIAL. (SM)

ALL DIMENSIONS ARE IN mm UNLESS OTHERWISE NOTED

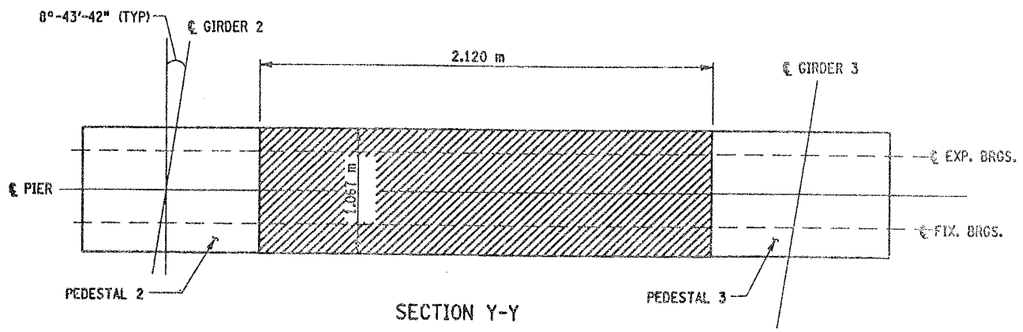

SECTION Y-Y
NOT TO SCALE

LIST OF ITEMS USED:

ITEM 15565.4302M - BRIDGE BEARING RESTORATION (EA)
ITEM 582.05M - REM. OF STRUC. CONC. - REPLACE WITH CLASS A CONCRETE (CM)
ITEM 582.07M - REM. OF STRUC. CONC. - REPL. W/ VERT. OVERHEAD PATCH MAT'L (SM)
ITEM 585.02M - STRUCTURAL LIFTING OPERATIONS - TYPE B (EA)
ITEM 585.03M - STRUCTURAL LIFTING OPERATION - TYPE C (EA)

AS BUILT REVISIONS

SIGNATURE DATE

INTERSTATE 481 NB
OVER
CSX RAILROAD YARD
PIER 7

STATE OF NEW YORK
DEPARTMENT OF TRANSPORTATION

FILENAME	REGION	DATE	DRAWING NO.
305613AE.PTA	3	10/02	PR17-7N

DESIGN SUPERVISOR ____ JOB MANAGER ____ DESIGNED BY ____ CHECKED BY ____ ESTIMATED BY ____ DRAFTED BY ____ CHECKED BY ____

FED ROAD REG. NO.	STATE	CONTRACT NO.	SHEET NO.	TOTAL SHEETS
1	N.Y.	D259214	323	432

BRIDGE REHABILITATION PROJECT (ELEMENT SPECIFIC)
VARIOUS BRIDGES ON INTERSTATE 481
TOWNS OF DEWITT AND CICERO
ONONDAGA COUNTY
P.I.N. 305613 B.I.N. 1093572

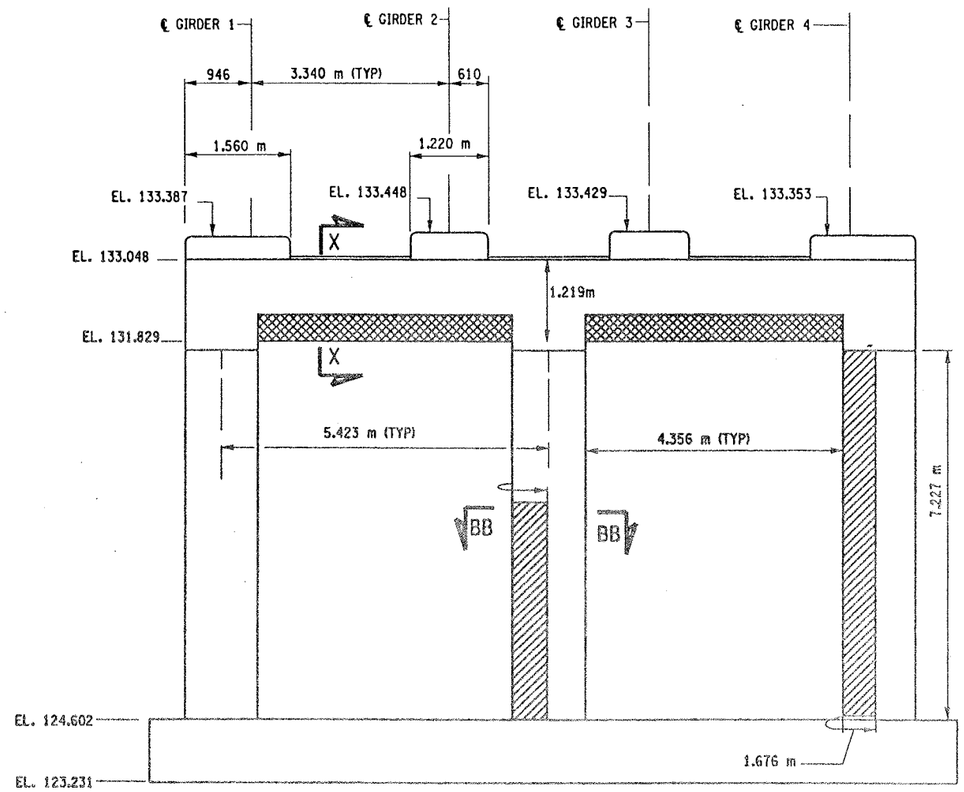

PIER 8 - FRONT FACE (LOOKING NORTH)
BIN 1093572
SCALE: 1 TO 50

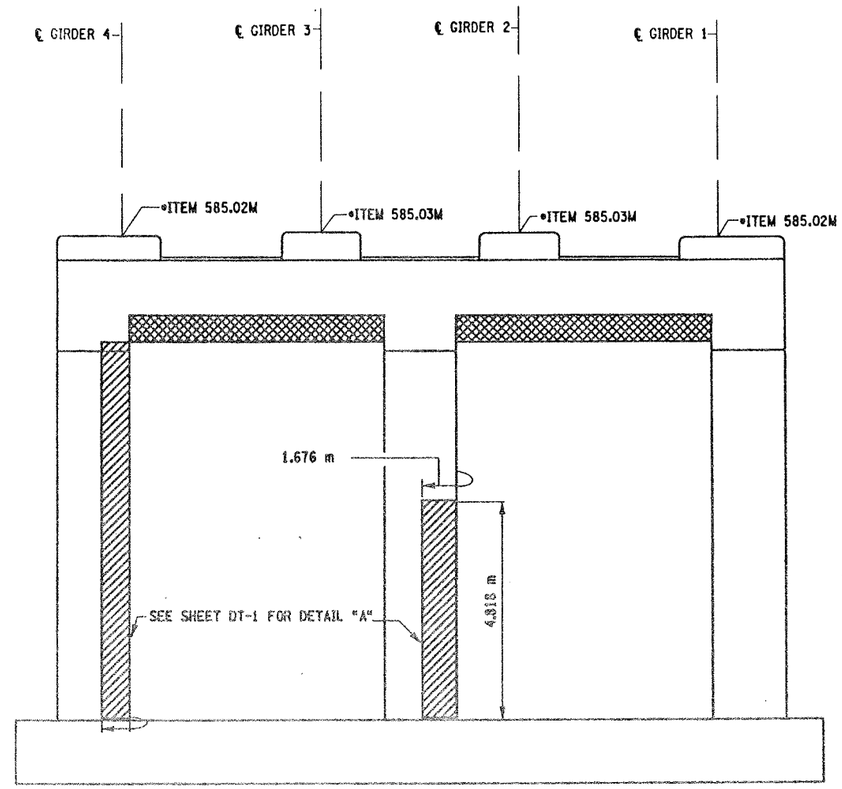

PIER 8 - BACK FACE (LOOKING SOUTH)
BIN 1093572
SCALE: 1 TO 50

NOTES:

1. ALL REINFORCEMENT TO REMAIN.
2. RESTORE TO ORIGINAL DIMENSIONS.
3. PEDESTALS NUMERICALLY NUMBERED FROM WEST TO EAST.
4. FOR THE CONCRETE REPAIR AREAS, THE CONCRETE SHALL BE REMOVED TO AT LEAST 40mm MIN. BEYOND THE ENCOUNTERED REINFORCEMENT AND TO SOUND CONCRETE, A.O.B.E.
5. ELEVATIONS SHOWN ARE FROM ORIGINAL CONTRACT PLANS F.I.S.H. 70-7 AND ARE FOR REFERENCE ONLY.
6. REMOVAL DIMENSIONS SHOWN ON PLANS ARE ESTIMATED AND SHALL BE FIELD VERIFIED BY THE CONTRACTOR AND ENGINEER PRIOR TO BEGINNING OF REMOVAL OPERATIONS A.O.B.E.
7. PERFORM BEARING RESTORATION TO ALL EXPANSION BEARINGS (TO INCLUDE RESETTING OF UNDEREXTENDED OR OVEREXTENDED BEARINGS). SEE DWG. BR-10 & BR-11 FOR BEARING RESTORATION DETAILS. SEE DWG. PR17-1S FOR BEARING RESTORATION NOTES.
8. SEE DWG. PR17-12S FOR SECTION BB-BB.
9. SEE DWG. PR17-7N FOR SECTION X-X.
10. ALL CONCRETE REMOVAL SHALL BE SAWCUT TO PRODUCE NEAT REMOVAL LINES. COST TO BE INCLUDED IN THE PRICE BID FOR ITEM 582.05M AND 582.07M.
11. FOR JACKING NOTES SEE DWG PR17-1S.

• PERFORM STRUCTURAL LIFTING UNDER ITEM 585.02M - STRUCTURAL LIFTING OPERATIONS - TYPE B (LIFTING AT A PIER) OR ITEM 585.03M - STRUCTURAL LIFTING OPERATIONS - TYPE C (LIFTING AT A PIER WHERE THE CONTRACTOR SHALL BE REQUIRED TO LIFT OFF THE FOOTING AND/OR GROUND LEVEL.

JACKING LOADS:

D.L. = 75 MT
L.L. = 50 MT
TOTAL = 125 MT

LEGEND:

ITEM 582.05M - REMOVAL OF STRUCTURAL CONCRETE- REPLACE WITH CLASS A CONCRETE (CM)

ITEM 582.07M - REMOVAL OF STRUCTURAL CONCRETE - REPLACE WITH VERTICAL OVERHEAD PATCH MATERIAL. (SM)

ALL DIMENSIONS ARE IN mm UNLESS OTHERWISE NOTED

LIST OF ITEMS USED:

ITEM 15565.4302M - BRIDGE BEARING RESTORATION (EA)
ITEM 582.05M - REM. OF STRUC. CONC. - REPLACE WITH CLASS A CONCRETE (CM)
ITEM 582.07M - REM. OF STRUC. CONC. - REPL. W/ VERT. OVERHEAD PATCH MATL. (SM)
ITEM 585.02M - STRUCTURAL LIFTING OPERATIONS - TYPE B (EA)
ITEM 585.03M - STRUCTURAL LIFTING OPERATION - TYPE C (EA)

AS BUILT REVISIONS

SIGNATURE DATE

INTERSTATE 481 NB
OVER
CSX RAILROAD YARD
PIER 8

STATE OF NEW YORK
DEPARTMENT OF TRANSPORTATION

FILENAME	REGION	DATE	DRAWING NO.
305613AE.P8A	3	10/02	PR17-8N

DESIGN SUPERVISOR ____ JOB MANAGER ____ DESIGNED BY ____ ESTIMATED BY ____ DRAFTED BY ____ CHECKED BY ____ CHECKED BY ____

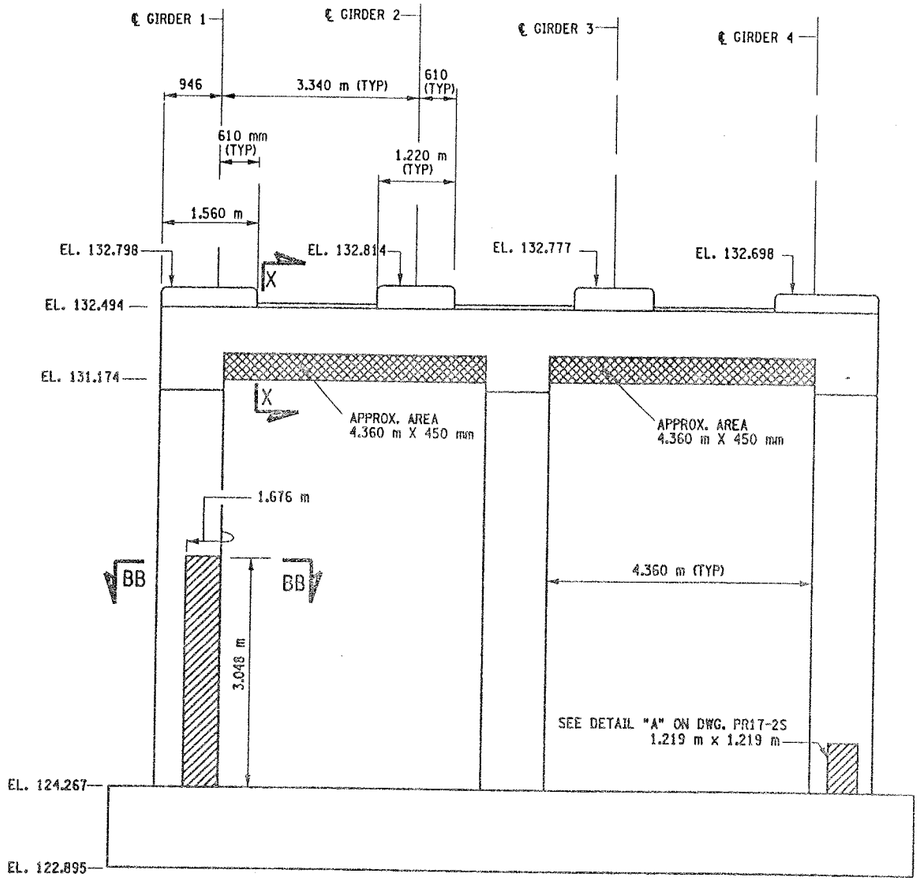

PIER 9 - FRONT FACE (LOOKING NORTH)

BIN 1093572

SCALE: 1 TO 50

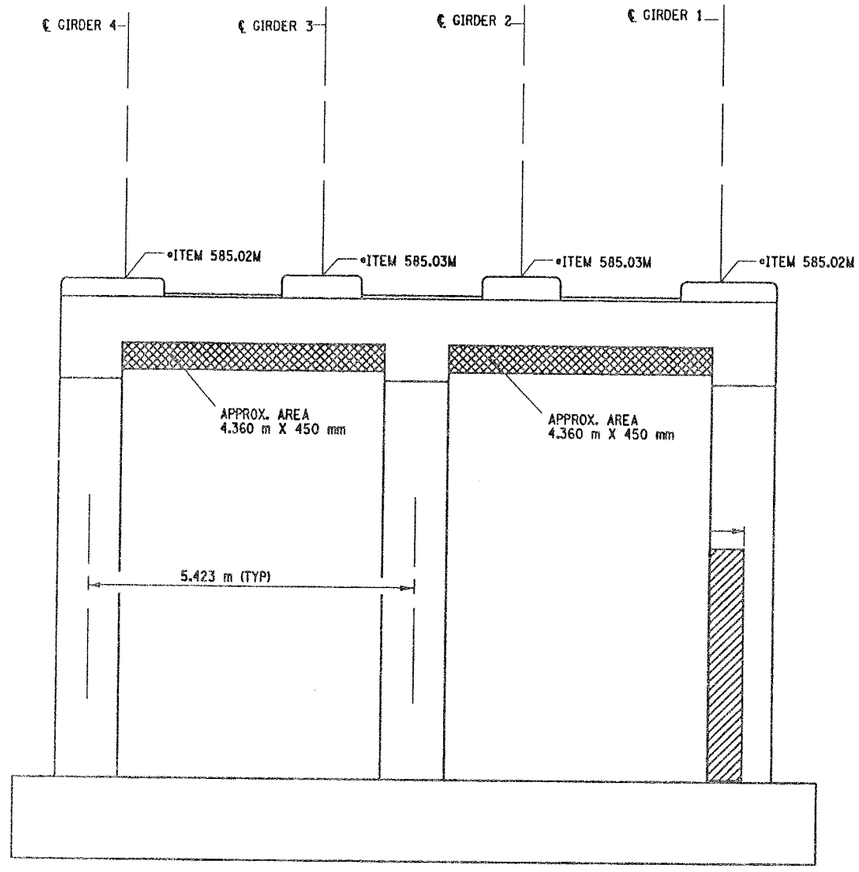

PIER 9 - BACK FACE (LOOKING SOUTH)

BIN 1093572

SCALE: 1 TO 50

FED ROAD REG. NO.	STATE	CONTRACT NO.	SHEET NO.	TOTAL SHEETS
1	N.Y.	D259214	324	432

BRIDGE REHABILITATION PROJECT (ELEMENT SPECIFIC)

VARIOUS BRIDGES ON INTERSTATE 481

TOWNS OF DEWITT AND CICERO

ONONDAGA COUNTY

P.I.N. 305613 B.I.N. 1093572

NOTES:

1. ALL REINFORCEMENT TO REMAIN.
2. RESTORE TO ORIGINAL DIMENSIONS.
3. PEDESTALS NUMERICALLY NUMBERED FROM WEST TO EAST.
4. FOR THE CONCRETE REPAIR AREAS, THE CONCRETE SHALL BE REMOVED TO AT LEAST 40mm MIN. BEYOND THE ENCOUNTERED REINFORCEMENT AND TO SOUND CONCRETE, A.O.B.E.
5. ELEVATIONS SHOWN ARE FROM ORIGINAL CONTRACT PLANS F.I.S.H. 70-7 AND ARE FOR REFERENCE ONLY.
6. REMOVAL DIMENSIONS SHOWN ON PLANS ARE ESTIMATED AND SHALL BE FIELD VERIFIED BY THE CONTRACTOR PRIOR TO BEGINNING OF REMOVAL OPERATIONS A.O.B.E.
7. PERFORM BEARING RESTORATION TO ALL EXPANSION BEARINGS (TO INCLUDE RESETTING OF UNDEREXTENDED OR OVEREXTENDED BEARINGS). SEE DWG. PR-1S FOR BEARING RESTORATION NOTES. SEE DWG. BR-10 & BR-11 FOR BEARING RESTORATION DETAILS.
8. SEE DWG. PR17- 12S FOR SECTION BB-BB.
9. ALL CONCRETE REMOVAL SHALL BE SAWCUT TO PRODUCE NEAT REMOVAL LINES. COST TO BE INCLUDED IN THE PRICE BID FOR ITEM 582.05M AND 582.07M.
10. FOR JACKING NOTES SEE DWG PR17-1S
11. SEE DWG. PR17-7N FOR SECTION X - X.

• PERFORM STRUCTURAL LIFTING UNDER ITEM 585.02M - STRUCTURAL LIFTING OPERATIONS - TYPE B LIFTING AT A PIER) OR ITEM 585.03M - STRUCTURAL LIFTING OPERATIONS - TYPE C LIFTING AT A PIER WHERE THE CONTRACTOR SHALL BE REQUIRED TO LIFT OFF THE FOOTING AND/OR GROUND LEVEL.

JACKING LOADS:

D.L. = 75 MT
L.L. = 50 MT
TOTAL = 125 MT

LEGEND:

ITEM 582.05M - REMOVAL OF STRUCTURAL CONCRETE- REPLACE WITH CLASS A CONCRETE. (CM)

ITEM 582.07M - REMOVAL OF STRUCTURAL CONCRETE - REPLACE WITH VERTICAL OVER-HEAD PATCH MATERIAL. (SM)

LIST OF ITEMS USED:

ITEM 15565.4302M - BRIDGE BEARING RESTORATION (EA)
ITEM 582.05M - REM. OF STRUC. CONC. - REPLACE WITH CLASS A CONCRETE (CM)
ITEM 582.07M - REM. OF STRUC. CONC. - REPL. W/ VERT. OVERHEAD PATCH MAT.L (SM)
ITEM 585.02M - STRUCTURAL LIFTING OPERATIONS - TYPE B (EA)
ITEM 585.03M - STRUCTURAL LIFTING OPERATION - TYPE C (EA)

ALL DIMENSIONS ARE IN mm UNLESS OTHERWISE NOTED

AS BUILT REVISIONS

SIGNATURE DATE

INTERSTATE ROUTE 481 NB
OVER CSX RAILROAD YARD
PIER 9

STATE OF NEW YORK
DEPARTMENT OF TRANSPORTATION

FILENAME	REGION	DATE	DRAWING NO.
305613AE.P9A	3	10/02	PR17-9N

DESIGN SUPERVISOR ____ JOB MANAGER ____ DESIGNED BY ____ CHECKED BY ____ ESTIMATED BY ____ DRAFTED BY ____ CHECKED BY ____

FED ROAD REG. NO.	STATE	CONTRACT NO.	SHEET NO.	TOTAL SHEETS
1	N.Y.	D259214	325	432

BRIDGE REHABILITATION PROJECT (ELEMENT SPECIFIC)
VARIOUS BRIDGES ON INTERSTATE 481
TOWNS OF DEWITT AND CICERO
ONONDAGA COUNTY
P.I.N. 305613 | B.I.N. 1093572

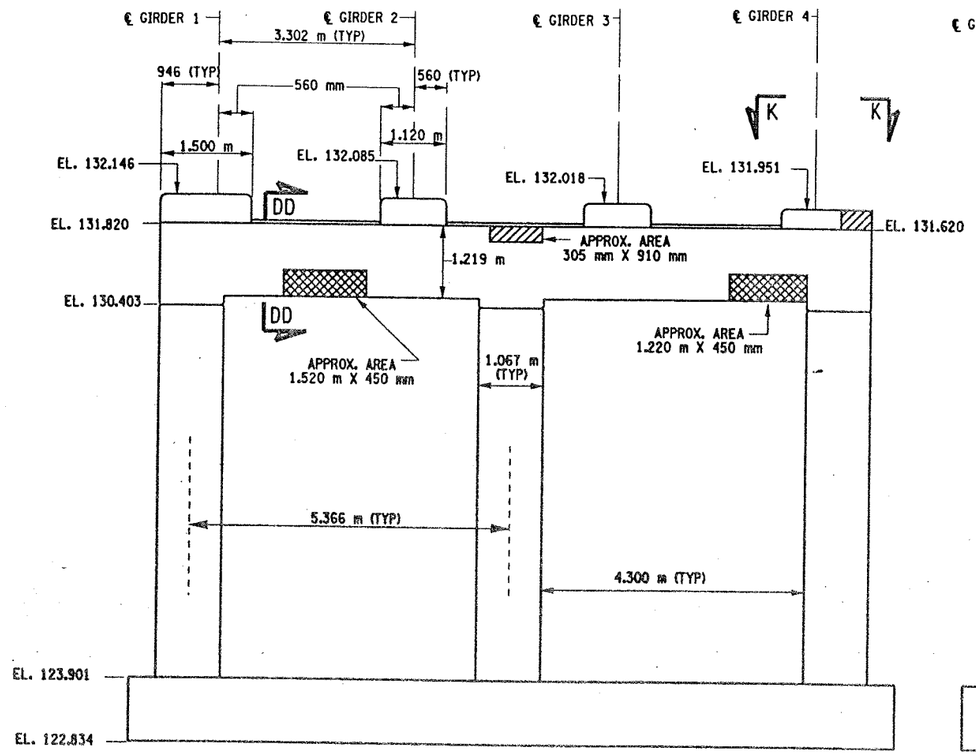

PIER 10 - FRONT FACE (LOOKING NORTH)
BIN 1093572
SCALE: 1 TO 50

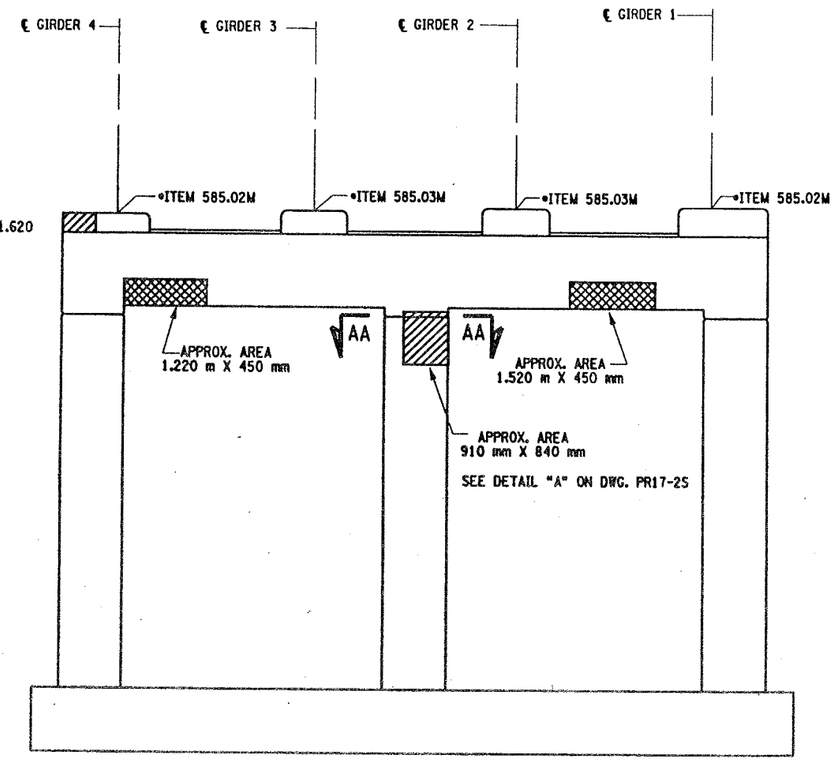

PIER 10 - BACK FACE (LOOKING SOUTH)
BIN 1093572
SCALE: 1 TO 50

NOTES:

1. ALL REINFORCEMENT TO REMAIN.
2. RESTORE TO ORIGINAL DIMENSIONS.
3. PEDESTALS NUMERICALLY NUMBERED FROM WEST TO EAST.
4. FOR THE CONCRETE REPAIR AREAS, THE CONCRETE SHALL BE REMOVED TO AT LEAST 40mm MIN. BEYOND THE ENCOUNTERED REINFORCEMENT AND TO SOUND CONCRETE, A.O.B.E.
5. ELEVATIONS SHOWN ARE FROM ORIGINAL CONTRACT PLANS F.I.S.H. 70-7 AND ARE FOR REFERENCE ONLY.
6. REMOVAL DIMENSIONS SHOWN ON PLANS ARE ESTIMATED AND SHALL BE FIELD VERIFIED BY THE CONTRACTOR PRIOR TO BEGINNING OF REMOVAL OPERATIONS A.O.B.E.
7. PERFORM BEARING RESTORATION TO ALL EXPANSION BEARINGS (TO INCLUDE RESETTING OF UNDEREXTENDED OR OVEREXTENDED BEARINGS). SEE DWG. PR17-1S FOR BEARING RESTORATION NOTES. SEE DWG. BR-10 & BR-11 FOR BEARING RESTORATION DETAILS.
8. FOR SECTION AA-AA SEE DWG. PR17-7N.
9. ALL CONCRETE REMOVAL SHALL BE SAWCUT TO PRODUCE NEAT REMOVAL LINES. COST TO BE INCLUDED IN THE PRICE BID FOR ITEM 582.05M AND ITEM 582.07M.
10. FOR JACKING NOTES SEE DWG PR17-1S.

• PERFORM STRUCTURAL LIFTING UNDER ITEM 585.02M - STRUCTURAL LIFTING OPERATIONS - TYPE B LIFTING AT A PIER) OR ITEM 585.03M - STRUCTURAL LIFTING OPERATIONS - TYPE C LIFTING AT A PIER WHERE THE CONTRACTOR SHALL BE REQUIRED TO LIFT OFF THE FOOTING AND/OR GROUND LEVEL.

JACKING LOADS:

D.L. = 75 MT
L.L. = 50 MT
TOTAL = 125 MT

LEGEND:

ITEM 582.05M - REMOVAL OF STRUCTURAL CONCRETE- REPLACE WITH CLASS A CONCRETE (CM)

ITEM 582.07M - REMOVAL OF STRUCTURAL CONCRETE - REPLACE WITH VERTICAL OVER-HEAD PATCH MATERIAL. (SM)

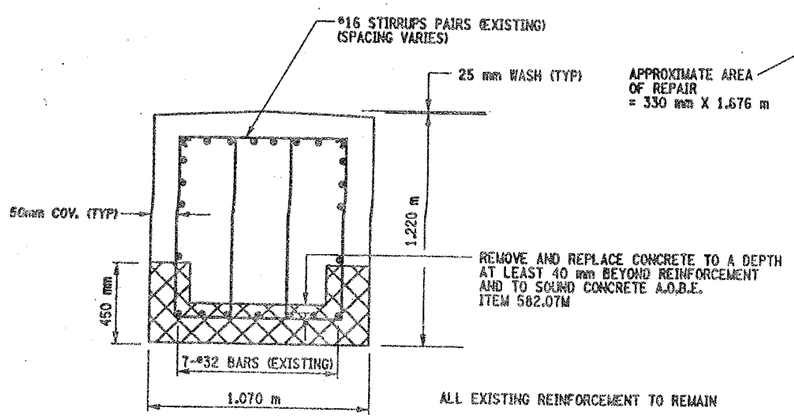

SECTION DD-DD
NOT TO SCALE

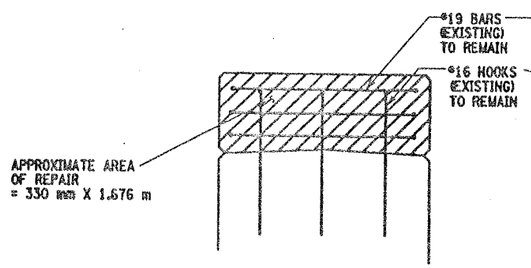

SECTION N-N
NOT TO SCALE

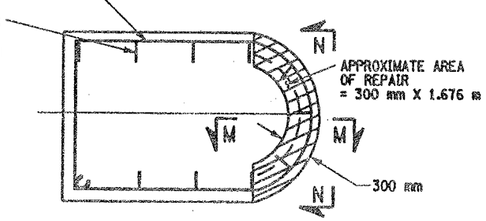

SECTION K-K
NOT TO SCALE

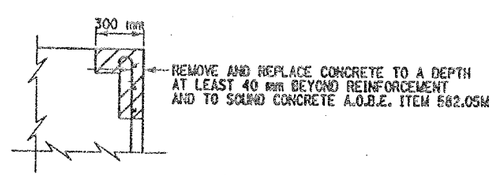

SECTION M-M
NOT TO SCALE

LIST OF ITEMS USED:

ITEM 15565.4302M - BRIDGE BEARING RESTORATION (EA)
ITEM 582.05M - REM. OF STRUC. CONC. - REPLACE WITH CLASS A CONCRETE (CM)
ITEM 582.07M - REM. OF STRUC. CONC. - REPL. W/ VERT. OVERHEAD PATCH MAT'L. (SM)
ITEM 585.02M - STRUCTURAL LIFTING OPERATIONS - TYPE B (EA)
ITEM 585.03M - STRUCTURAL LIFTING OPERATION - TYPE C (EA)

ALL DIMENSIONS ARE IN mm UNLESS OTHERWISE NOTED

AS BUILT REVISIONS

SIGNATURE | DATE

INTERSTATE 481 NB
OVER
CSX RAILROAD YARD
PIER 10

STATE OF NEW YORK
DEPARTMENT OF TRANSPORTATION

FILENAME	REGION	DATE	DRAWING NO.
305613AE.P10	3	10/02	PR17-10N

DESIGN SUPERVISOR ____ JOB MANAGER ____ DESIGNED BY ____ CHECKED BY ____ ESTIMATED BY ____ DRAFTED BY ____ CHECKED BY ____

FED ROAD REG. NO.	STATE	CONTRACT NO.	SHEET NO.	TOTAL SHEETS
1	N.Y.	D259214	326	432

BRIDGE REHABILITATION PROJECT (ELEMENT SPECIFIC)
VARIOUS BRIDGES ON INTERSTATE 481
TOWNS OF DEWITT AND CICERO
ONONDAGA COUNTY
P.I.N. 305613 | B.I.N. 1093572

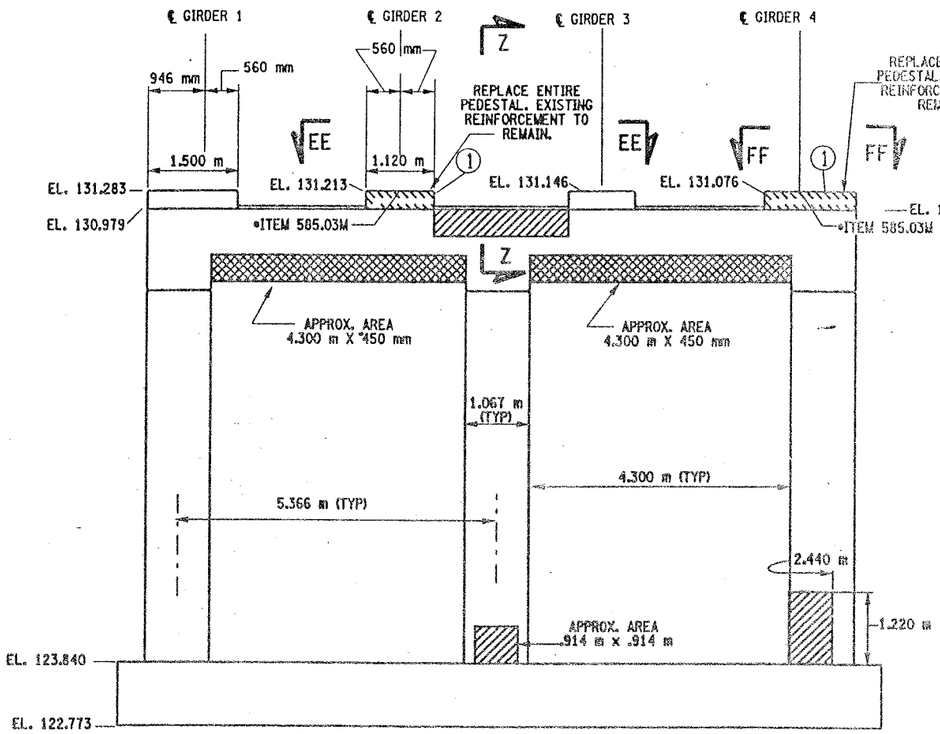

PIER 11 - FRONT FACE (LOOKING NORTH)
BIN 1093572
SCALE: 1 TO 50

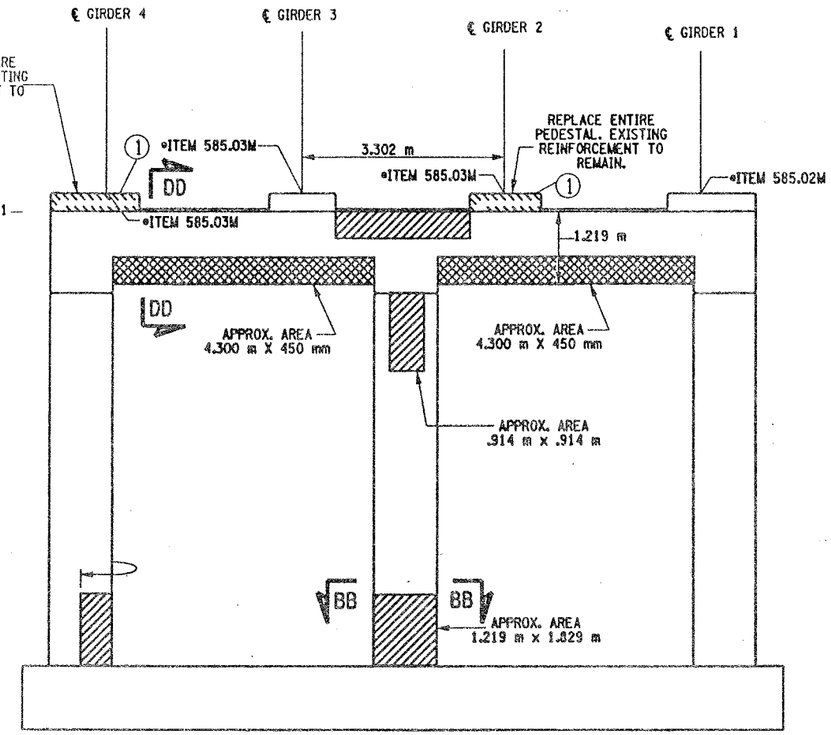

PIER 11- BACK FACE (LOOKING SOUTH)
BIN 1093572
SCALE: 1 TO 50

NOTES:

1. ALL REINFORCEMENT TO REMAIN.
2. RESTORE TO ORIGINAL DIMENSIONS.
3. PEDESTALS NUMERICALLY NUMBERED FROM WEST TO EAST.
4. FOR THE CONCRETE REPAIR AREAS, THE CONCRETE SHALL BE REMOVED TO AT LEAST 40mm MIN. BEYOND THE ENCOUNTERED REINFORCEMENT AND TO SOUND CONCRETE, A.O.B.E.
5. ELEVATIONS SHOWN ARE FROM ORIGINAL CONTRACT PLANS F.I.S.H. 70-7 AND ARE FOR REFERENCE ONLY.
6. REMOVAL DIMENSIONS SHOWN ON PLANS ARE ESTIMATED AND SHALL BE FIELD VERIFIED BY THE CONTRACTOR PRIOR TO BEGINNING OF REMOVAL OPERATIONS A.O.B.E.
7. PERFORM BEARING RESTORATION TO ALL EXPANSION BEARINGS (TO INCLUDE RESETTING OF UNDEREXTENDED OR OVEREXTENDED BEARINGS). SEE DWG. PR17-1S FOR BEARING RESTORATION NOTES. SEE DWG. BR-10 & BR-11 FOR BEARING RESTORATION DETAILS.
8. SEE DWG PR17-10N FOR SECTION DD-DD.
9. SEE DWG. PR17-12S FOR SECTION BB-BB.
10. SEE DWG. PR17-7N FOR SECTION Z-Z.
11. PEDESTALS 2 AND 4 SHALL BE REPLACED TO EXISTING DIMENSIONS. ITEM 555.0105 M
12. ALL CONCRETE REMOVAL SHALL BE SAWCUT TO PRODUCE NEAT REMOVAL LINES. COST TO BE INCLUDED IN THE PRICE BID FOR ITEM 582.05M AND ITEM 582.07M.
13. FOR JACKING NOTES SEE DWG PR17-1S.

• PERFORM STRUCTURAL LIFTING UNDER ITEM 585.02M - STRUCTURAL LIFTING OPERATIONS - TYPE B (LIFTING AT A PIER) OR ITEM 585.03M - STRUCTURAL LIFTING OPERATIONS - TYPE C (LIFTING AT A PIER WHERE THE CONTRACTOR SHALL BE REQUIRED TO LIFT OFF THE FOOTING AND/OR GROUND LEVEL.

JACKING LOADS:

D.L. = 75 MT
L.L. = 50 MT
TOTAL = 125 MT

(1) INDICATES CONCRETE PLACEMENT NUMBER

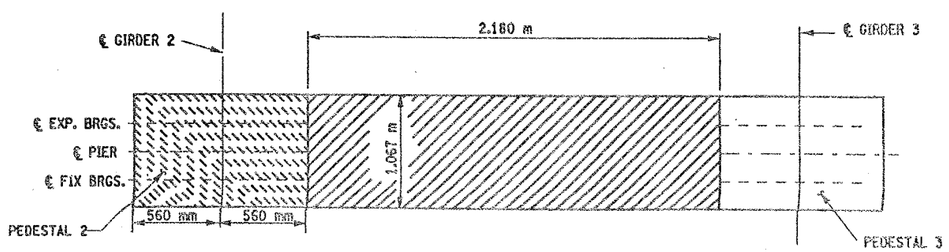

SECTION EE-EE
NOT TO SCALE

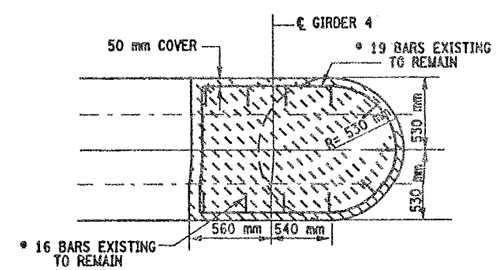

SECTION FF-FF
NOT TO SCALE

LEGEND:

- ITEM 582.05M - REMOVAL OF STRUCTURAL CONCRETE- REPLACE WITH CLASS A CONCRETE. (CM)
- ITEM 582.07M - REMOVAL OF STRUCTURAL CONCRETE - REPLACE WITH VERTICAL OVER-HEAD PATCH MATERIAL. (SM)
- ITEM 580.01 M - REMOVAL OF STRUCTURAL CONCRETE. (CM) AND ITEM 555.0105 M - CONCRETE FOR STRUCTURES CLASS A. (CM)

ALL DIMENSIONS ARE IN mm UNLESS OTHERWISE NOTED

CONCRETE TABLE (m^3)		
PLACEMENT	QUANTITY	ITEM NO.
1	0.80	555.0105M

LIST OF ITEMS USED

ITEM 555.0105M - CONCRETE FOR STRUCTURES, CLASS A (CM)
ITEM 15565.4302M - BRIDGE BEARING RESTORATION (EA)
ITEM 580.01M - REMOVAL OF STRUCTURAL CONCRETE (CM)
ITEM 582.05M - REM. OF STRUC. CONC. - REPLACE WITH CLASS A CONCRETE (CM)
ITEM 582.07M - REM. OF STRUC. CONC. - REPL. W/ VERT. OVERHEAD PATCH MAT'L (SM)
ITEM 585.02M - STRUCTURAL LIFTING OPERATIONS - TYPE B (EA)
ITEM 585.03M - STRUCTURAL LIFTING OPERATION - TYPE C (EA)

AS BUILT REVISIONS

SIGNATURE | DATE

INTERSTATE 481 NB
OVER
CSX RAILROAD YARD
PIER 11

STATE OF NEW YORK
DEPARTMENT OF TRANSPORTATION

FILENAME	REGION	DATE	DRAWING NO.
305613AE.P11	3	10/02	PR17-11N

DESIGN SUPERVISOR ____ JOB MANAGER ____ DESIGNED BY ____ CHECKED BY ____ ESTIMATED BY ____ DRAFTED BY ____ CHECKED BY ____

FED ROAD REG. NO.	STATE	CONTRACT NO.	SHEET NO.	TOTAL SHEETS
1	N.Y.	D259214	327	432

BRIDGE REHABILITATION PROJECT (ELEMENT SPECIFIC)
VARIOUS BRIDGES ON INTERSTATE 481
TOWNS OF DEWITT AND CICERO
ONONDAGA COUNTY
P.I.N. 305613 B.I.N. 1093572

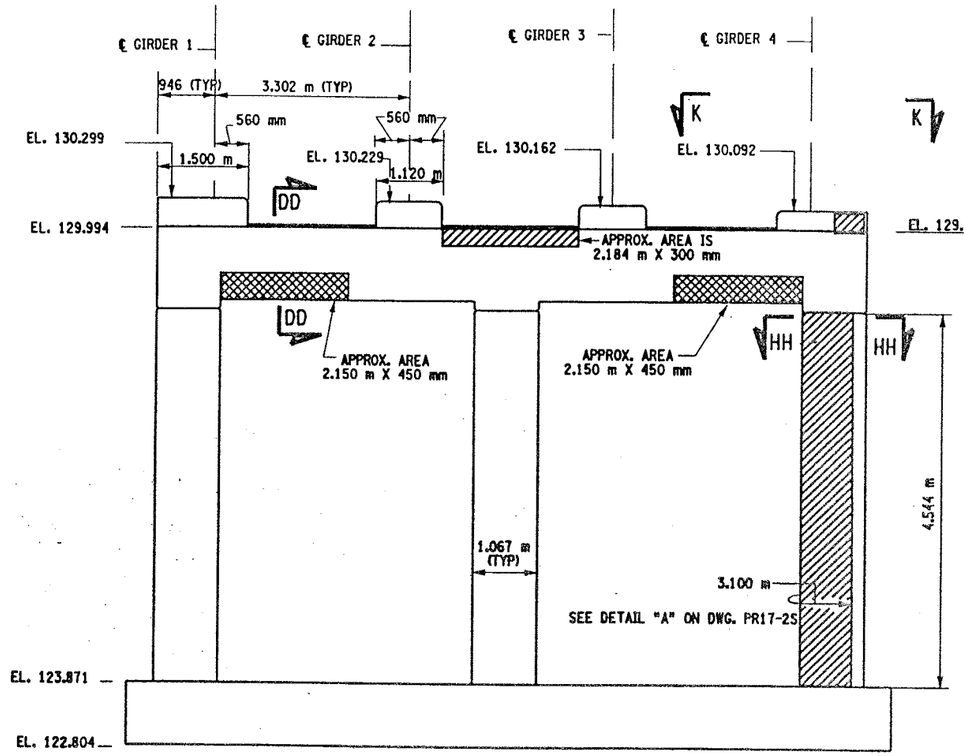

PIER 12 - FRONT FACE (LOOKING NORTH)
BIN 1093572
SCALE: 1 TO 50

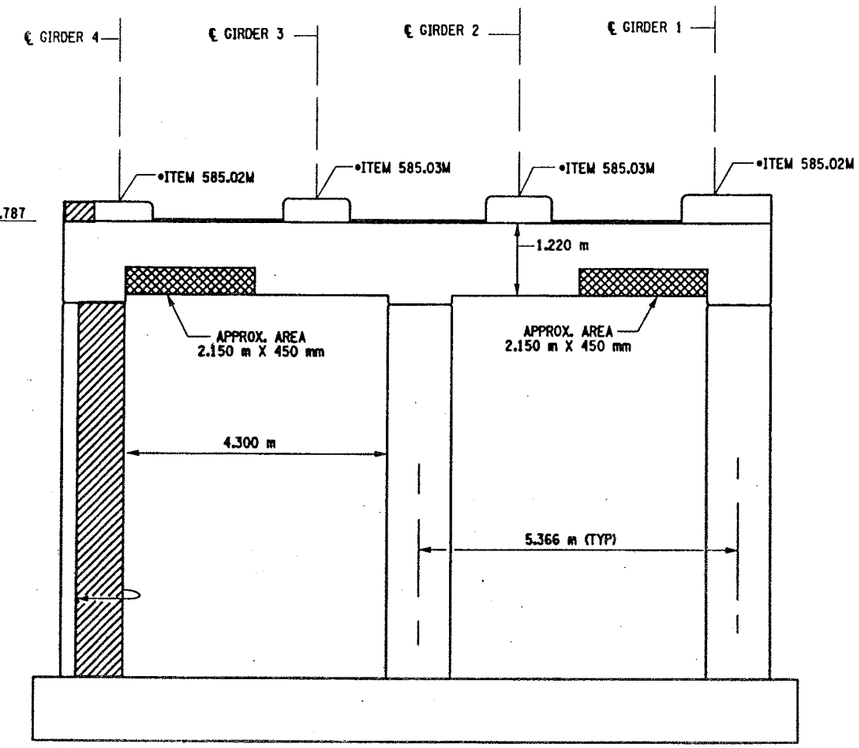

PIER 12 - BACK FACE (LOOKING SOUTH)
BIN 1093572
SCALE: 1 TO 50

NOTES:

1. ALL REINFORCEMENT TO REMAIN.
2. RESTORE TO ORIGINAL DIMENSIONS.
3. PEDESTALS NUMERICALLY NUMBERED FROM WEST TO EAST.
4. FOR THE CONCRETE REPAIR AREAS, THE CONCRETE SHALL BE REMOVED TO AT LEAST 40mm MIN. BEYOND THE ENCOUNTERED REINFORCEMENT AND TO SOUND CONCRETE, A.O.B.E.
5. ELEVATIONS SHOWN ARE FROM ORIGINAL CONTRACT PLANS F.I.S.H. 70-7 AND ARE FOR REFERENCE ONLY.
6. REMOVAL DIMENSIONS SHOWN ON PLANS ARE ESTIMATED AND SHALL BE FIELD VERIFIED BY THE CONTRACTOR PRIOR TO BEGINNING OF REMOVAL OPERATIONS A.O.B.E.
7. PERFORM BEARING RESTORATION TO ALL EXPANSION BEARINGS (TO INCLUDE RESETTING OF UNDEREXTENDED OR OVEREXTENDED BEARINGS). SEE DWG. PR17-1S FOR BEARING RESTORATION NOTES. SEE DWG. BR-10 & BR-11 FOR BEARING RESTORATION DETAILS.
8. SEE DWG PR17-10N FOR SECTION DD-DD.
9. ALL CONCRETE REMOVAL SHALL BE SAWCUT TO PRODUCE NEAT REMOVAL LINES. COST TO BE INCLUDED IN THE PRICE BID FOR ITEM 582.05M AND 582.07M.
10. FOR JACKING NOTES SEE DWG PR17-1S.

• PERFORM STRUCTURAL LIFTING UNDER ITEM 585.02M - STRUCTURAL LIFTING OPERATIONS - TYPE B (LIFTING AT A PIER) OR ITEM 585.03M - STRUCTURAL LIFTING OPERATIONS - TYPE C (LIFTING AT A PIER WHERE THE CONTRACTOR SHALL BE REQUIRED TO LIFT OFF THE FOOTING AND/OR GROUND LEVEL.

JACKING LOADS:

D.L. = 75 MT
L.L. = 50 MT
TOTAL = 125 MT

LEGEND:

ITEM 582.05M - REMOVAL OF STRUCTURAL CONCRETE- REPLACE WITH CLASS A CONCRETE. (CM)

ITEM 582.07M - REMOVAL OF STRUCTURAL CONCRETE - REPLACE WITH VERTICAL OVER-HEAD PATCH MATERIAL. (SM)

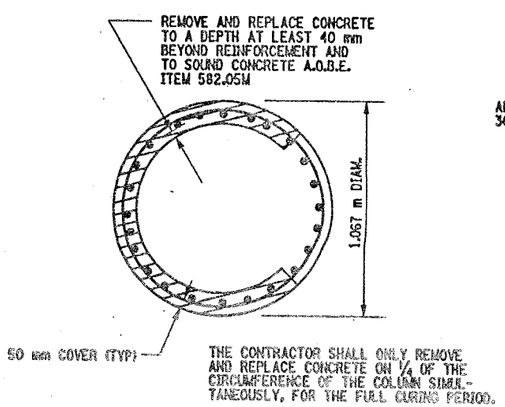

SECTION HH-HH
NOT TO SCALE

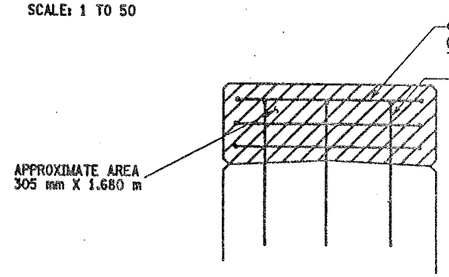

SECTION N-N
NOT TO SCALE

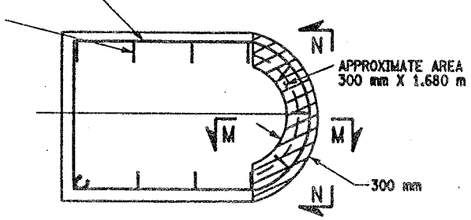

SECTION K-K
NOT TO SCALE

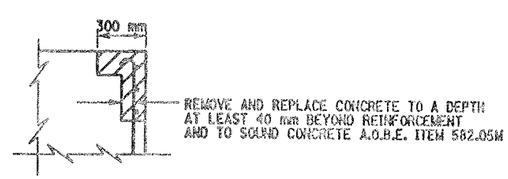

SECTION M-M
NOT TO SCALE

LIST OF ITEMS USED:

ITEM 15565.4302M - BRIDGE BEARING RESTORATION (EA)
ITEM 582.05M - REM. OF STRUC. CONC. - REPLACE WITH CLASS A CONCRETE (CM)
ITEM 582.07M - REM. OF STRUC. CONC. - REPL. W/ VERT. OVERHEAD PATCH MAT'L (SM)
ITEM 585.02M - STRUCTURAL LIFTING OPERATIONS - TYPE B (EA)
ITEM 585.03M - STRUCTURAL LIFTING OPERATION - TYPE C (EA)

ALL DIMENSIONS ARE IN mm UNLESS OTHERWISE NOTED

AS BUILT REVISIONS

SIGNATURE DATE

INTERSTATE 481 NB
OVER
CSX RAILROAD YARD
PIER 12

STATE OF NEW YORK
DEPARTMENT OF TRANSPORTATION

FILENAME	REGION	DATE	DRAWING NO.
305613AE.P12	3	10/02	PR17-12N

DESIGN SUPERVISOR ____ JOB MANAGER ____ DESIGNED BY ____ ESTIMATED BY ____ DRAFTED BY ____ CHECKED BY ____ CHECKED BY ____

FED ROAD REG. NO.	STATE	CONTRACT NO.	SHEET NO.	TOTAL SHEETS
1	N.Y.	D259214	328	432

BRIDGE REHABILITATION PROJECT (ELEMENT SPECIFIC)
VARIOUS BRIDGES ON INTERSTATE 481
TOWNS OF DEWITT AND CICERO
ONONDAGA COUNTY
P.I.N. 305613 B.I.N. 1093572

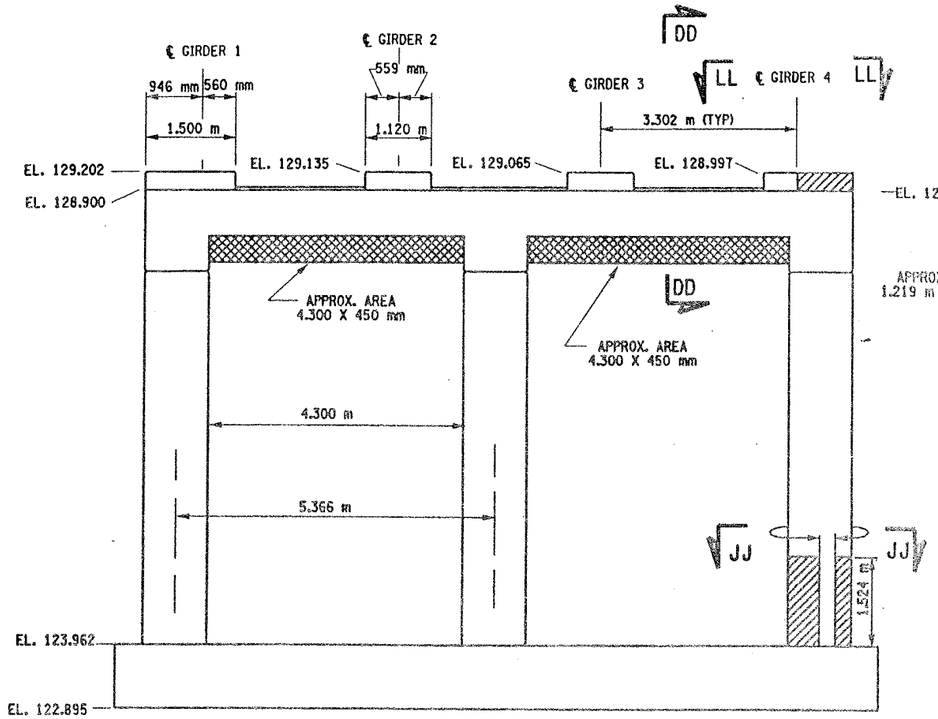

PIER 13 - FRONT FACE (LOOKING NORTH)
BIN 1093572
SCALE: 1 TO 50

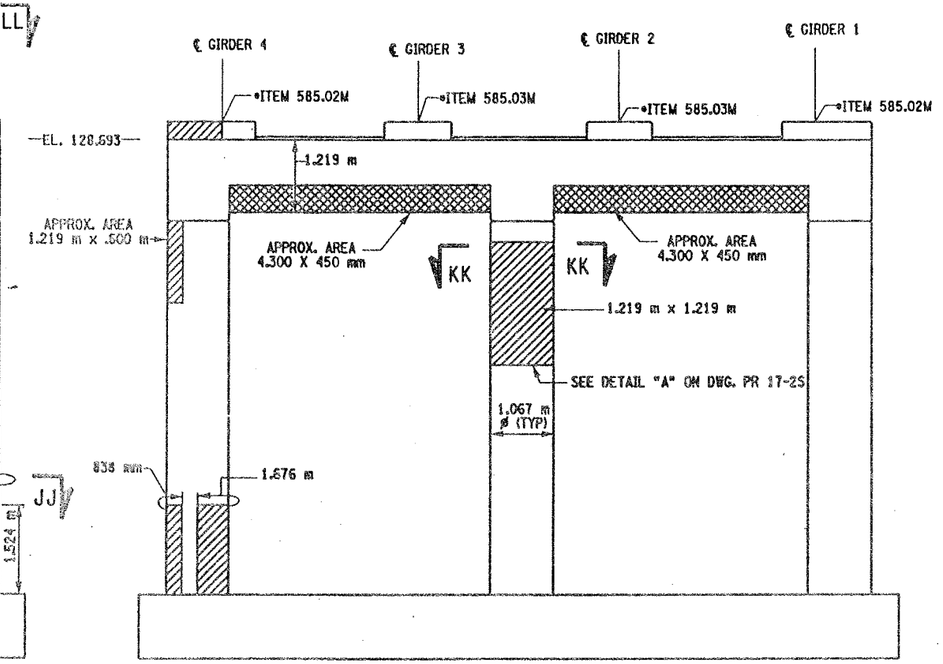

PIER 13- BACK FACE (LOOKING SOUTH)
BIN 1093572
SCALE: 1 TO 50

NOTES:

1. ALL REINFORCEMENT TO REMAIN.
2. RESTORE TO ORIGINAL DIMENSIONS.
3. PEDESTALS NUMERICALLY NUMBERED FROM WEST TO EAST.
4. FOR THE CONCRETE REPAIR AREAS, THE CONCRETE SHALL BE REMOVED TO AT LEAST 40mm MIN. BEYOND THE ENCOUNTERED REINFORCEMENT AND TO SOUND CONCRETE, A.O.B.E.
5. ELEVATIONS SHOWN ARE FROM ORIGINAL CONTRACT PLANS F.I.S.H. 70-7 AND ARE FOR REFERENCE ONLY.
6. REMOVAL DIMENSIONS SHOWN ON PLANS ARE ESTIMATED AND SHALL BE FIELD VERIFIED BY THE CONTRACTOR PRIOR TO BEGINNING OF REMOVAL OPERATIONS A.O.B.E.
7. PERFORM BEARING RESTORATION TO ALL EXPANSION BEARINGS (TO INCLUDE RESETTING OF UNDEREXTENDED OR OVEREXTENDED BEARINGS). SEE DWG. PR17-1S FOR BEARING RESTORATION NOTES. SEE DWG. BR-10 & BR-11 FOR BEARING RESTORATION DETAILS.
8. SEE DWG. PR 17-10N FOR SECTION DD-DD.
9. ALL CONCRETE REMOVAL SHALL BE SAWCUT TO PRODUCE NEAT REMOVAL LINES. COST TO BE INCLUDED IN THE PRICE BID FOR ITEM 582.05M AND 582.07M.
10. FOR JACKING NOTES SEE DWG PR17-1S.

• PERFORM STRUCTURAL LIFTING UNDER ITEM 585.02M - STRUCTURAL LIFTING OPERATIONS - TYPE B (LIFTING AT A PIER) OR ITEM 585.03M - STRUCTURAL LIFTING OPERATIONS - TYPE C (LIFTING AT A PIER WHERE THE CONTRACTOR SHALL BE REQUIRED TO LIFT OFF THE FOOTING AND/OR GROUND LEVEL.

JACKING LOADS:

D.L. = 75 MT
L.L. = 50 MT
TOTAL = 125 MT

LEGEND:

ITEM 582.05M - REMOVAL OF STRUCTURAL CONCRETE- REPLACE WITH CLASS A CONCRETE. (CM)

ITEM 582.07M - REMOVAL OF STRUCTURAL CONCRETE - REPLACE WITH VERTICAL OVER-HEAD PATCH MATERIAL. (SM)

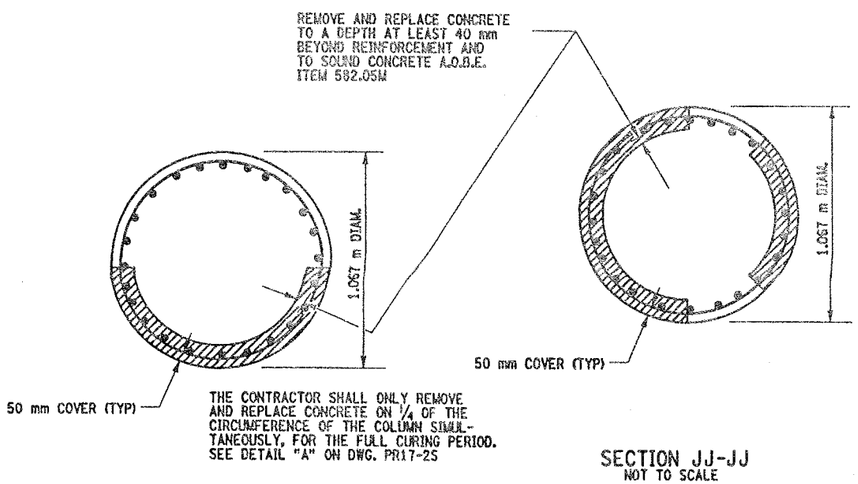

SECTION KK-KK
NOT TO SCALE

SECTION JJ-JJ
NOT TO SCALE

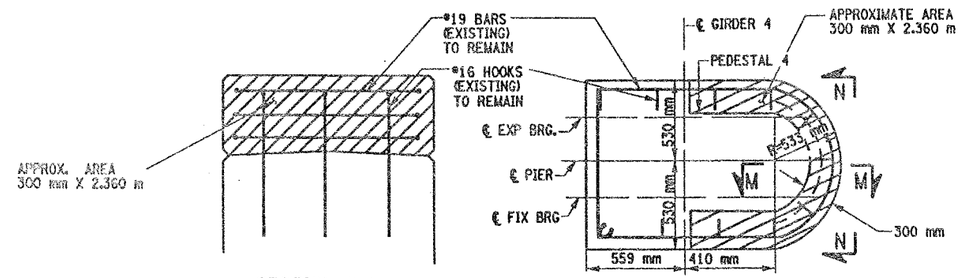

SECTION N-N
NOT TO SCALE

SECTION LL- LL
NOT TO SCALE

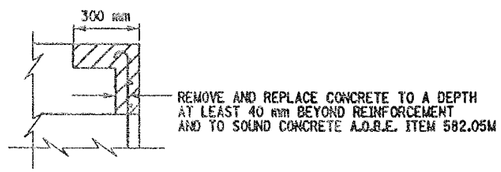

SECTION M-M
NOT TO SCALE

LIST OF ITEMS USED:

ITEM 15565.4302M - BRIDGE BEARING RESTORATION (EA)
ITEM 582.05M - REM. OF STRUC. CONC. - REPLACE WITH CLASS A CONCRETE (CM)
ITEM 582.07M - REM. OF STRUC. CONC. - REPL. W/ VERT. OVERHEAD PATCH MAT.L (SM)
ITEM 585.02M - STRUCTURAL LIFTING OPERATIONS - TYPE B (EA)
ITEM 585.03M - STRUCTURAL LIFTING OPERATION - TYPE C (EA)

ALL DIMENSIONS ARE IN mm UNLESS OTHERWISE NOTED

AS BUILT REVISIONS

SIGNATURE DATE

INTERSTATE 481 NB
OVER
CSX RAILROAD YARD
PIER 13

STATE OF NEW YORK
DEPARTMENT OF TRANSPORTATION

FILENAME	REGION	DATE	DRAWING NO.
305613AE.P13	3	10/02	PR17-13N

DESIGN SUPERVISOR ____ JOB MANAGER ____ DESIGNED BY ____ CHECKED BY ____ ESTIMATED BY ____ DRAFTED BY ____ CHECKED BY ____

FED ROAD REG. NO.	STATE	CONTRACT NO.	SHEET NO.	TOTAL SHEETS
1	N.Y.	D259214	329	432

BRIDGE REHABILITATION PROJECT (ELEMENT SPECIFIC)
VARIOUS BRIDGES ON INTERSTATE 481
TOWNS OF DEWITT AND CICERO
ONONDAGA COUNTY
P.I.N. 305613 B.I.N. 1093572

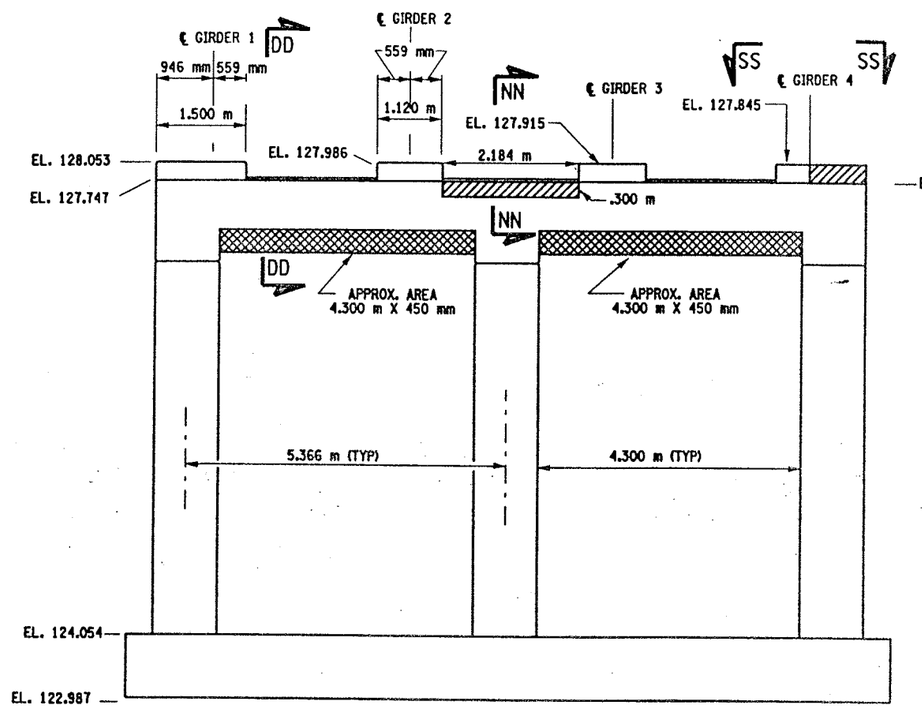

PIER 14 - FRONT FACE (LOOKING NORTH)
BIN 1093572
SCALE: 1 TO 50

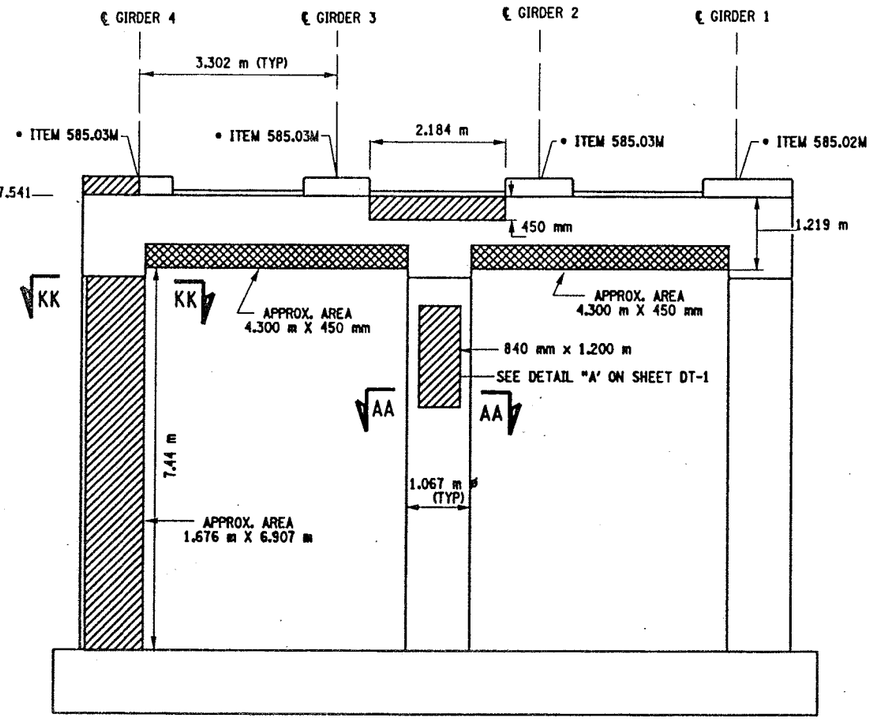

PIER 14 - BACK FACE (LOOKING SOUTH)
BIN 1093572
SCALE: 1 TO 50

NOTES:

1. ALL REINFORCEMENT TO REMAIN.
2. RESTORE TO ORIGINAL DIMENSIONS.
3. PEDESTALS NUMERICALLY NUMBERED FROM WEST TO EAST.
4. FOR THE CONCRETE REPAIR AREAS, THE CONCRETE SHALL BE REMOVED TO AT LEAST 40mm MIN. BEYOND THE ENCOUNTERED REINFORCEMENT AND TO SOUND CONCRETE, A.O.B.E.
5. ELEVATIONS SHOWN ARE FROM ORIGINAL CONTRACT PLANS F.I.S.H. 70-7 AND ARE FOR REFERENCE ONLY.
6. REMOVAL DIMENSIONS SHOWN ON PLANS ARE ESTIMATED AND SHALL BE FIELD VERIFIED BY THE CONTRACTOR PRIOR TO BEGINNING OF REMOVAL OPERATIONS A.O.B.E.
7. PERFORM BEARING RESTORATION TO ALL EXPANSION BEARINGS (TO INCLUDE RESETTING OF UNDEREXTENDED OR OVEREXTENDED BEARINGS). SEE DWG. PR17-1S FOR BEARING RESTORATION NOTES. SEE DWG. BR-10 & BR-11 FOR BEARING RESTORATION DETAILS.
8. SEE DWG. PR17-10N FOR SECTION DD-DD.
9. SEE DWG. PR17-7N FOR SECTION AA-AA.
10. SEE DWG. PR17-13N FOR SECTION KK-KK.
11. ALL CONCRETE REMOVAL SHALL BE SAWCUT TO PRODUCE NEAT REMOVAL LINES. COST TO BE INCLUDED IN THE PRICE BID FOR ITEM 582.05M AND ITEM 582.07M.
12. FOR JACKING NOTES SEE DWG PR17-1S.

• PERFORM STRUCTURAL LIFTING UNDER ITEM 585.02M - STRUCTURAL LIFTING OPERATIONS - TYPE B (LIFTING AT A PIER) OR ITEM 585.03M - STRUCTURAL LIFTING OPERATIONS - TYPE C (LIFTING AT A PIER WHERE THE CONTRACTOR SHALL BE REQUIRED TO LIFT OFF THE FOOTING AND/OR GROUND LEVEL.

JACKING LOADS:

D.L. = 75 MT
L.L. = 50 MT
TOTAL = 125 MT

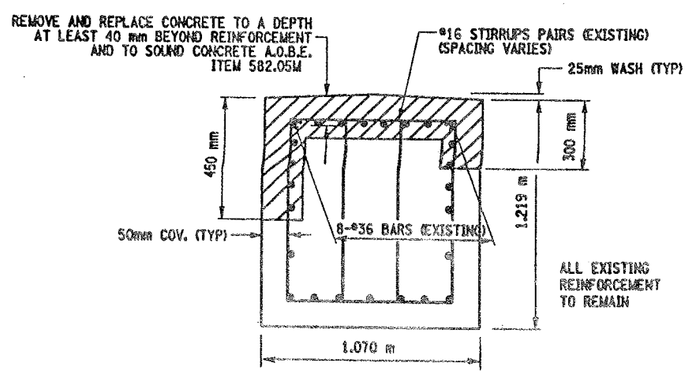

SECTION NN-NN
NOT TO SCALE

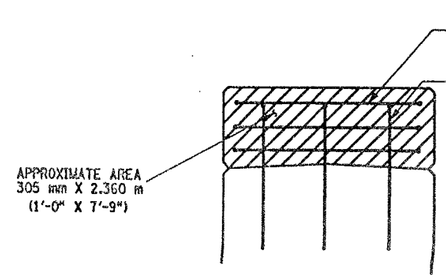

SECTION N-N
NOT TO SCALE

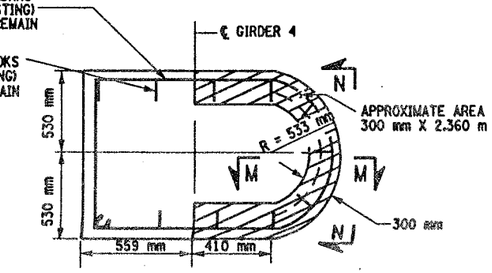

SECTION SS-SS
NOT TO SCALE

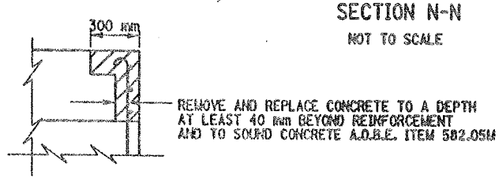

SECTION M-M
NOT TO SCALE

LIST OF ITEMS USED:

ITEM 15565.4302M - BRIDGE BEARING RESTORATION (EA)
ITEM 582.05M - REM. OF STRUC. CONC. - REPLACE WITH CLASS A CONCRETE (CM)
ITEM 582.07M - REM. OF STRUC. CONC. - REPL. W/ VERT. OVERHEAD PATCH MAT'L. (SM)
ITEM 585.02M - STRUCTURAL LIFTING OPERATIONS - TYPE B (EA)
ITEM 585.03M - STRUCTURAL LIFTING OPERATION - TYPE C (EA)

LEGEND:

ITEM 582.05M - REMOVAL OF STRUCTURAL CONCRETE- REPLACE WITH CLASS A CONCRETE. (CM)

ITEM 582.07M - REMOVAL OF STRUCTURAL CONCRETE - REPLACE WITH VERTICAL OVER-HEAD PATCH MATERIAL. (SM)

ALL DIMENSIONS ARE IN mm UNLESS OTHERWISE NOTED

AS BUILT REVISIONS

SIGNATURE DATE

INTERSTATE 481 NB
OVER
CSX RAILROAD YARD
PIER 14

STATE OF NEW YORK
DEPARTMENT OF TRANSPORTATION

FILENAME	REGION	DATE	DRAWING NO.
305613AE.P14	3	10/02	PR17-14N

CHECKED BY
DRAFTED BY
ESTIMATED BY
CHECKED BY
DESIGNED BY
JOB MANAGER
DESIGN SUPERVISOR

FED ROAD REG. NO.	STATE	CONTRACT NO.	SHEET NO.	TOTAL SHEETS
1	N.Y.	D259214	330	432

BRIDGE REHABILITATION PROJECT (ELEMENT SPECIFIC)
VARIOUS BRIDGES ON INTERSTATE 481
TOWNS OF DEWITT AND CICERO
ONONDAGA COUNTY
P.I.N. 305613 B.I.N. 1093571 & 1093572

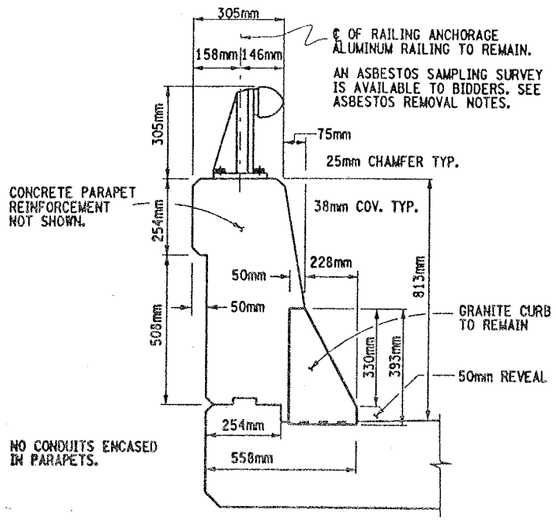

TYPICAL SECTION THRU SUPERSTRUCTURE
PARAPET CONCRETE DETAILS

NOT TO SCALE

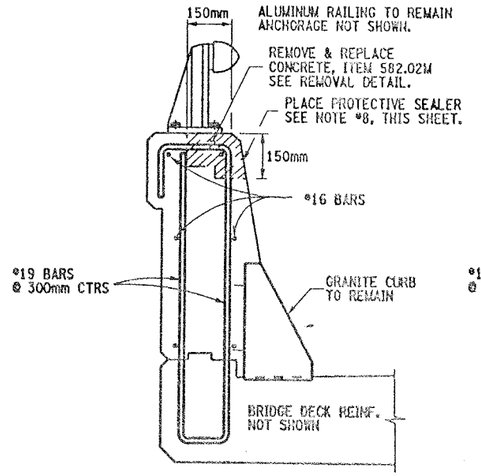

(I) REPAIR DETAILS
150mmX150mm TOP

NOT TO SCALE

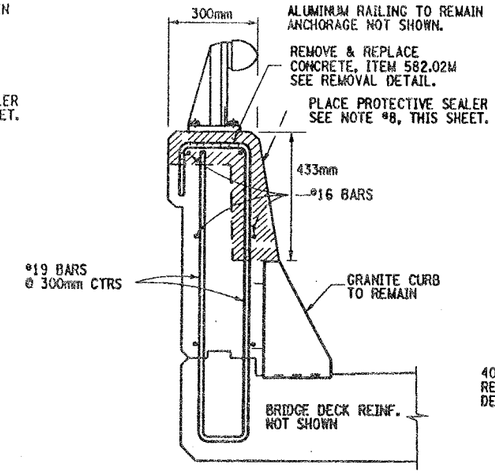

(II) REPAIR DETAILS
FULL TOP & FRONT FACE

NOT TO SCALE

CONCRETE REMOVAL NOTES:

REMOVE ALL DETERIORATED CONCRETE TO SOUND CONCRETE AND AT LEAST 40mm BEYOND ENCOUNTERED REINFORCEMENT BARS, AOBE. PAYMENT TO BE PAID UNDER ITEM 582.05M.

CONCRETE REMOVAL, SAWCUT 6mm DEPTH MINIMUM TO PRODUCE NEAT REMOVAL LINES, ALL COSTS SHALL BE INCLUDED IN PRICE BID FOR ITEM 582.05M.

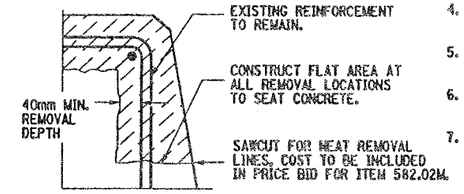

TYPICAL REMOVAL DETAIL

NOT TO SCALE

CONCRETE PARAPET REPAIR NOTES:

1. ALUMINUM RAILING TO REMAIN, ANCHORAGE NOT SHOWN.
2. EXISTING PARAPET REINFORCEMENT TO REMAIN.
3. GRANITE CURB TO REMAIN, ANCHOR BARS NOT SHOWN.
4. REMOVAL OF CONCRETE TO LIMITS SHOWN, AOBE. SEE TYPICAL REMOVAL DETAIL, THIS SHEET.
5. ALL DIMENSIONS SHOWN FOR CONCRETE REMOVAL ARE APPROXIMATE AND SHALL BE FIELD VERIFIED.
6. CONTRACTOR SHALL RESTORE CONCRETE PARAPET TO ORIGINAL DIMENSIONS.
7. IT IS DESIRABLE TO RETAIN ALL EXISTING GRANITE CURB, BUT AT SOME LOCATIONS ADJACENT TO THE JOINT BLOCK-OUTS IT MAY BE NECESSARY TO REPLACE OR REPAIR THE SECTION OF CURB, TO THE SATISFACTION OF THE ENGINEER. COST TO BE INCLUDE IN PRICE BID FOR ITEM 582.05M.
8. AFTER PARAPET REPAIRS ARE COMPLETED AND SUFFICIENT CURE TIME AS DECIDED BY ENGINEER, APPLY A COATING TYPE PROTECTIVE SEALERS WHICH MEETS MATERIAL SPECIFICATION 717-04. THIS PROTECTIVE SEALER SHALL BE APPLIED TO THE FRONT FACE AND TOP OF ALL PARAPETS (REPAIRED AREAS & ORIGINAL AREAS) TO ENSURE A UNIFORMED APPEARANCE. COST OF THIS SEALER TO BE INCLUDED IN PRICE BID FOR ITEM 18559.1696 M.

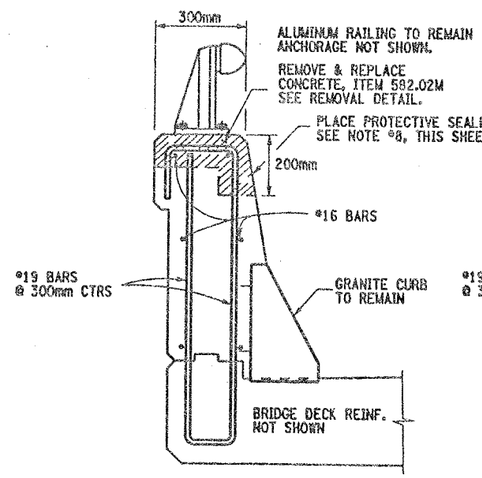

(III) REPAIR DETAILS
FULL TOP & 200mm FACE

NOT TO SCALE

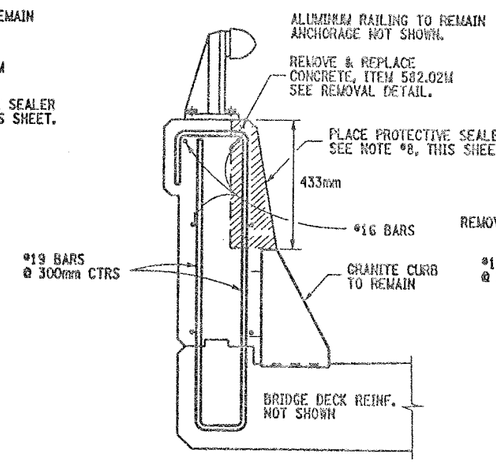

(IV) REPAIR DETAILS
FRONT FACE

NOT TO SCALE

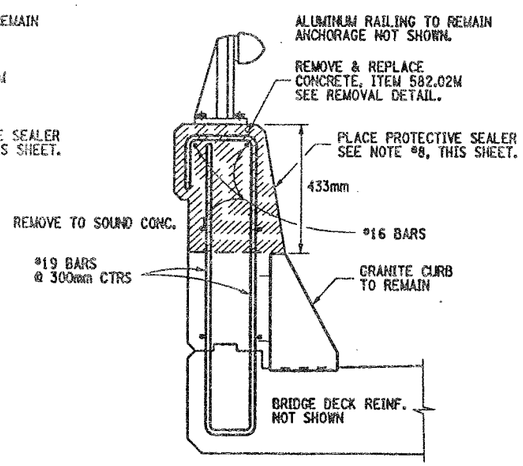

(V) REPAIR DETAILS
FULL SECTION

NOT TO SCALE

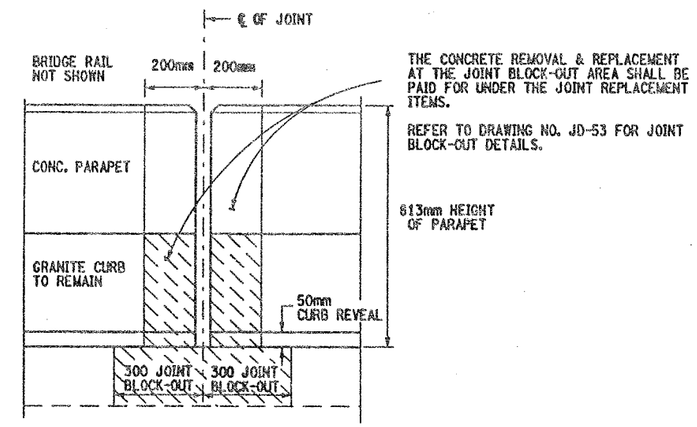

THE CONCRETE REMOVAL & REPLACEMENT AT THE JOINT BLOCK-OUT AREA SHALL BE PAID FOR UNDER THE JOINT REPLACEMENT ITEMS.

REFER TO DRAWING NO. JD-53 FOR JOINT BLOCK-OUT DETAILS.

FRONT FACE PARAPET CONCRETE DETAIL
SHOWS TYPICAL CONC. REMOVAL AT JOINT

NOT TO SCALE

ASBESTOS MATERIAL REMOVAL NOTES:

THE REMOVAL OF ALL ASBESTOS CONTAINING CAULK (ITEM 210.5433M) SHALL BE COMPLETED PRIOR TO COMMENCEMENT OF ANY PARAPET REPAIR WORK.

THIS REMOVAL OF THE ASBESTOS CAULK SHALL BE PERFORMED AT EACH BRIDGE RAIL BASE PLATE ON BOTH N.B. & S.B. BRIDGES. (REMOVE ASBESTOS CALKING AT ALL RAIL BASE PLATES BOTH BRIDGES)

AFTER COMPLETION OF THE PARAPET REPAIRS INSTALL A CAULKING COMPOUND AROUND THE BASE PLATES OF THE RAILING WHICH MEETS MATERIAL SPECIF. 705-06 AND IS ACCEPTABLE TO THE ENGINEER. PAID UNDER ITEM 210.5433M.

REFER TO ORIGINAL CONTRACT PLANS F.I.S.H. 70-7 FOR RAIL LAY-OUT DETAILS.

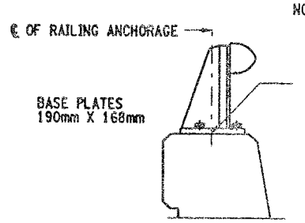

REMOVE EXISTING GRAY ASBESTOS CAULKING COMPOUND AT THE ALUMINUM RAILING BASE PLATES. IT IS ASSUMED THAT THE CAULK COMPOUND IS SURROUNDING (PERIMETER) THE RAILING BASE PLATES. THIS PERIMETER REMOVAL OPERATION SHALL BE PERFORM AT EACH RAILING BASE PLATE ON BOTH STRUCTURES.

HOWEVER, SOME CAULK MATERIAL MAY BE FOUND UNDER THE RAILING BASE PLATES. THIS CAULKING COMPOUND UNDER THE BASE PLATES SHALL BE REMOVED ONLY AT LOCATIONS WHERE THE PARAPET CONCRETE REPAIRS WILL DISTURB THE MATERIAL (REMOVAL AS ENCOUNTERED).

ALL COSTS TO BE PAID UNDER ITEM 210.5433M. SEE ASBESTOS MATERIAL REMOVAL NOTES, THIS SHEET.

TYPICAL BRIDGE RAIL DETAIL

NOT TO SCALE

ITEMS USED:

ITEM 582.05M	- REMOVAL OF STRUCTURAL CONCRETE REPLACE WITH CLASS "A" CONCRETE (CM)
ITEM 210.5433M	- REMOVAL & DISPOSAL OF ASBESTOS CONTAINING CAULK (BV 12) (L.S)
ITEM 18559.1696M	- PROTECTIVE SEALING OF STRUCTURAL CONCRETE (SM)

ALL DIMENSIONS ARE IN mm UNLESS OTHERWISE NOTED

AS BUILT REVISIONS

SIGNATURE DATE

INTERSTATE 481 OVER CSX RR YARD

PARAPET REPAIR DETAILS

STATE OF NEW YORK
DEPARTMENT OF TRANSPORTATION

FILENAME	REGION	DATE	DRAWING NO.
305613AB.R1A	3	10/02	PW17-1

ESTIMATED BY ____ CHECKED BY ____
DRAFTED BY ____ CHECKED BY ____
DESIGNED BY ____
JOB MANAGER ____
DESIGN SUPERVISOR ____

FED ROAD REG. NO.	STATE	CONTRACT NO.	SHEET NO.	TOTAL SHEETS
1	N.Y.	D259214	331	432

BRIDGE REHABILITATION PROJECT (ELEMENT SPECIFIC)
VARIOUS BRIDGES ON INTERSTATE 481
TOWNS OF DEWITT AND CICERO
ONONDAGA COUNTY
P.I.N. 305613 B.I.N. 1093571 & 1093572

PARAPET REPAIR TABLE (ITEM 582.05M)

BIN 1093571	STATION TO STATION	RIGHT SIDE (EAST)	LEFT SIDE (WEST)	REMARKS
SPAN 1	6+626.288 TO 6+627.588	1.300m		(I) REPAIR PROCEDURE
	6+653.795 TO 6+654.495	.700m		(V) REPLACE FULL SECTION
	6+653.595 TO 6+654.495		.900m	(V) REPLACE FULL SECTION
SPAN 2	6+654.895 TO 6+655.505	.600m		(V) REPLACE FULL SECTION
	6+654.895 TO 6+655.505		.600m	(V) REPLACE FULL SECTION
	6+654.895 TO 6+664.895	10.000m		(I) REPAIR PROCEDURE
	6+669.995 TO 6+673.695	3.700m		(I) REPAIR PROCEDURE
SPAN 3	6+731.266 TO 6+735.466	4.200m		(I) REPAIR PROCEDURE
	6+753.266 TO 6+754.266	1.000m		(V) REPLACE FULL SECTION
	6+753.266 TO 6+754.266		1.000m	(V) REPLACE FULL SECTION
SPAN 4	6+754.666 TO 6+755.666	1.000m		(V) REPLACE FULL SECTION
	6+760.466 TO 6+769.866		9.400m	(I) REPAIR PROCEDURE
	6+760.666 TO 6+778.966	18.300m		(I) REPAIR PROCEDURE*
	6+790.116 TO 6+791.616		1.500m	(I) REPAIR PROCEDURE (BACKFACE)
	6+789.316 TO 6+801.316	12.000m		(I) REPAIR PROCEDURE
	6+794.116 TO 6+803.616		9.500m	(III) REPAIR PROCEDURE
	6+813.616 TO 6+814.616	1.000m		(V) REPLACE FULL SECTION
	6+813.616 TO 6+814.616		1.000m	(IV) REPAIR PROCEDURE
SPAN 5	6+815.016 TO 6+816.016	1.000m		(V) REPLACE FULL SECTION
	6+823.166 TO 6+871.166	48.000m		(I) REPAIR PROCEDURE
	6+870.966 TO 6+874.966	4.000m		(V) REPLACE FULL SECTION
SPAN 6	6+875.366 TO 6+876.366	1.000m		(V) REPLACE FULL SECTION
	6+875.366 TO 6+895.366		20.000m	(IV) REPAIR PROCEDURE
	6+875.317 TO 6+935.317	60.000m		(III) REPAIR PROCEDURE
	6+908.317 TO 6+914.317		6.000m	(IV) REPAIR PROCEDURE
	6+920.517 TO 6+928.517		8.000m	(IV) REPAIR PROCEDURE
	6+923.317 TO 6+935.317		12.000m	(IV) REPAIR PROCEDURE
SPAN 7	6+935.717 TO 6+947.217	11.500m		(IV) REPAIR PROCEDURE
	6+949.917 TO 6+951.417	1.500m		(I) REPAIR PROCEDURE
	6+952.112 TO 6+967.112		15.000m	(IV) REPAIR PROCEDURE
	6+967.012 TO 6+969.612	2.600m		(IV) REPAIR PROCEDURE
SPAN 8	6+973.512 TO 7+010.907	37.400m		(I) REPAIR PROCEDURE
	6+981.907 TO 6+990.407		8.500m	(IV) REPAIR PROCEDURE
	6+996.907 TO 7+010.907		14.000m	(IV) REPAIR PROCEDURE
SPAN 9	7+011.307 TO 7+048.702		37.400m	(II) REPAIR PROCEDURE
SPAN 10	7+070.325 TO 7+074.325		4.000m	(IV) REPAIR PROCEDURE
SPAN 11	7+091.825 TO 7+098.825	7.000m		(I) REPAIR PROCEDURE
	7+102.525 TO 7+106.025	3.500m		(I) REPAIR PROCEDURE
	7+100.325 TO 7+108.325		8.000m	(I) REPAIR PROCEDURE
	7+109.325 TO 7+110.825	1.500m		(I) REPAIR PROCEDURE
	7+112.725 TO 7+128.725		16.000m	(I) REPAIR PROCEDURE
	7+114.825 TO 7+117.825	3.000m		(I) REPAIR PROCEDURE
SPAN 12	7+129.125 TO 7+166.825		37.700m	(II) REPAIR PROCEDURE
	7+131.925 TO 7+137.925	6.000m		(III) REPAIR PROCEDURE
	7+158.025 TO 7+159.525	1.500m		(III) REPAIR PROCEDURE
SPAN 13	7+167.225 TO 7+204.925	37.700m		(I) REPAIR PROCEDURE
	7+172.225 TO 7+184.225		12.000m	(I) REPAIR PROCEDURE
	7+189.925 TO 7+204.925		15.000m	(I) REPAIR PROCEDURE
SPAN 14	7+205.325 TO 7+243.025	37.700m		(I) REPAIR PROCEDURE
	7+205.325 TO 7+243.025		37.700m	(II) REPAIR PROCEDURE
SPAN 15	7+243.425 TO 7+281.530		38.100m	(II) REPAIR PROCEDURE
	7+248.530 TO 7+254.330	5.800m		(III) REPAIR PROCEDURE
	7+257.430 TO 7+262.030	4.600m		(I) REPAIR PROCEDURE
	7+265.030 TO 7+266.530	1.500m		(I) REPAIR PROCEDURE
	7+268.230 TO 7+271.730	3.500m		(I) REPAIR PROCEDURE

* FULL SECTION REPLACEMENT AS DIRECTED BY ENGINEER TO INCLUDE IF NECESSITY, REPLACEMENT OR REPAIR OF THE GRANITE CURB. ALL COST TO BE INCLUDED IN BID PRICE FOR ITEM 582.05M.

(BACKFACE) INDICATES REPAIR AREA IS ON THE OUTSIDE OR BACKFACE OF PARAPET. CAUTION MUST BE TAKEN WHEN WORKING OVER R.R. TRACKS.

PARAPET REPAIR TABLE (ITEM 582.05M)

BIN 1093572	STATION TO STATION	RIGHT SIDE (EAST)	LEFT SIDE (WEST)	REMARKS
SPAN 1	6+578.084 TO 6+582.084	4.000m		(I) REPAIR PROCEDURE
	6+592.589 TO 6+594.789	2.200m		(I) REPAIR PROCEDURE
	6+593.884 TO 6+600.884		7.000m	(I) REPAIR PROCEDURE (BACKFACE)
	6+597.489 TO 6+599.489	2.000m		(I) REPAIR PROCEDURE
	6+600.581 TO 6+608.297	7.700m		(I) REPAIR PROCEDURE
	6+602.697 TO 6+608.297		5.600m	(I) REPAIR PROCEDURE (BACKFACE)
SPAN 2	6+608.697 TO 6+620.197		11.500m	(I) REPAIR PROCEDURE (BACKFACE)
	6+639.497 TO 6+641.497		2.000m	(I) REPAIR PROCEDURE (BACKFACE)
	6+646.997 TO 6+653.497		6.500m	(I) REPAIR PROCEDURE (BACKFACE)
SPAN 3	6+662.597 TO 6+664.597		2.000m	(II) REPAIR PROCEDURE
	6+676.097 TO 6+684.097	8.000m		(I) REPAIR PROCEDURE
	6+697.097 TO 6+698.097	1.000m		(I) REPAIR PROCEDURE
	6+707.070 TO 6+708.070	1.000m		(V) REPLACE FULL SECTION *
	6+707.070 TO 6+708.070		1.000m	(V) REPLACE FULL SECTION *
SPAN 4	6+708.470 TO 6+709.470	1.000m		(V) REPLACE FULL SECTION
	6+715.570 TO 6+757.070	41.500m		(I) REPAIR PROCEDURE
	6+719.070 TO 6+728.070		9.000m	(I) REPAIR PROCEDURE
	6+750.420 TO 6+768.420		18.000m	(III) REPAIR PROCEDURE
	6+767.420 TO 6+768.420		1.000m	(V) REPLACE FULL SECTION
SPAN 5	6+768.820 TO 6+770.320	1.500m		(V) REPLACE FULL SECTION
	6+773.120 TO 6+786.120	13.000m		(I) REPAIR PROCEDURE
	6+778.920 TO 6+783.220		4.300m	(I) REPAIR PROCEDURE
	6+799.620 TO 6+802.120		2.500m	(I) REPAIR PROCEDURE
	6+804.620 TO 6+815.620	11.000m		(I) REPAIR PROCEDURE
	6+826.771 TO 6+828.771		2.000m	(V) REPLACE FULL SECTION
SPAN 6	6+829.171 TO 6+830.171	1.000m		(V) REPLACE FULL SECTION
	6+829.171 TO 6+830.171		1.000m	(V) REPLACE FULL SECTION
	6+830.171 TO 6+888.771		58.600m	(II) REPAIR PROCEDURE
	6+846.971 TO 6+849.971	3.000m		(I) REPAIR PROCEDURE
	6+855.621 TO 6+889.121	33.500m		(I) REPAIR PROCEDURE
SPAN 7	6+889.126 TO 6+926.916	37.400m		(I) REPAIR PROCEDURE
	6+892.221 TO 6+897.521		5.300m	(I) REPAIR PROCEDURE
	6+903.321 TO 6+907.621		4.300m	(I) REPAIR PROCEDURE
	6+909.721 TO 6+911.721		2.000m	(I) REPAIR PROCEDURE
	6+916.916 TO 6+926.916		10.000m	(III) REPAIR PROCEDURE
SPAN 8	6+927.316 TO 6+964.712	37.400m		(IV) REPAIR PROCEDURE
SPAN 9	6+965.112 TO 6+996.112	31.000m		(I) REPAIR PROCEDURE
SPAN 10	7+014.602 TO 7+023.602		9.000m	(II) REPAIR PROCEDURE
	7+020.302 TO 7+040.302	20.000m		(II) REPAIR PROCEDURE
SPAN 11	7+044.302 TO 7+046.302		2.000m	(I) REPAIR PROCEDURE
	7+060.397 TO 7+067.697	7.300m		(I) REPAIR PROCEDURE
SPAN 12	7+099.892 TO 7+101.892	2.000m		(I) REPAIR PROCEDURE
SPAN 13	7+119.492 TO 7+125.492		6.000m	(I) REPAIR PROCEDURE
	7+168.283 TO 7+186.283		18.000m	(I) REPAIR PROCEDURE
	7+168.983 TO 7+191.483	22.500m		(I) REPAIR PROCEDURE
SPAN 14	7+171.093 TO 7+191.483	20.400m		(I) REPAIR PROCEDURE
	7+165.783 TO 7+179.283		13.500m	(I) REPAIR PROCEDURE
SPAN 15	7+197.883 TO 7+199.883		2.000m	(I) REPAIR PROCEDURE
	7+198.283 TO 7+229.683	31.400m		(I) REPAIR PROCEDURE

GENERAL NOTES:

WORK ADJACENT TO JOINT BLOCK-OUT (200mm) SHALL BE INCLUDED IN THE BRIDGE JOINT REPLACEMENT ITEMS. SEE DRAWING NO. JD-53 FOR JOINT BLOCK-OUT REMOVAL DETAILS.

SOME REPAIRS ARE ON THE BACK FACE OF THE PARAPETS SOME OF THIS WORK MAY BE OVER THE RAIL ROAD TRACKS.

REFER TO DRAWING NO. PW17-1 FOR CONCRETE REMOVAL DETAILS AND NOTES.

STATIONING AND DIMENSIONS SHOWN FOR CONCRETE REMOVAL ARE APPROXIMATE AND SHALL BE FIELD VERIFIED BY CONTRACTOR AND ENGINEER.

REFER TO RECONSTRUCTION NOTES ON DRAWING NO. GN-1.

ALL DIMENSIONS ARE IN m UNLESS OTHERWISE NOTED

AS BUILT REVISIONS

SIGNATURE DATE

INTERSTATE 481
OVER
CSX RAILROAD YARD

TABLE OF PARAPET REPAIRS

STATE OF NEW YORK
DEPARTMENT OF TRANSPORTATION

FILENAME	REGION	DATE	DRAWING NO.
305613AB.R1A	3	10/02	PW17-2

ESTIMATED BY ____ DRAFTED BY ____ CHECKED BY ____
DESIGNED BY ____ CHECKED BY ____
JOB MANAGER ____
DESIGN SUPERVISOR ____

FED ROAD REG. NO.	STATE	CONTRACT NO.	SHEET NO.	TOTAL SHEETS
1	N.Y.	D259214	332	432

BRIDGE REHABILITATION PROJECT (ELEMENT SPECIFIC)
VARIOUS BRIDGES ON INTERSTATE 481
TOWNS OF DEWITT AND CICERO
ONONDAGA COUNTY
P.I.N. 305613 B.I.N. 1093572

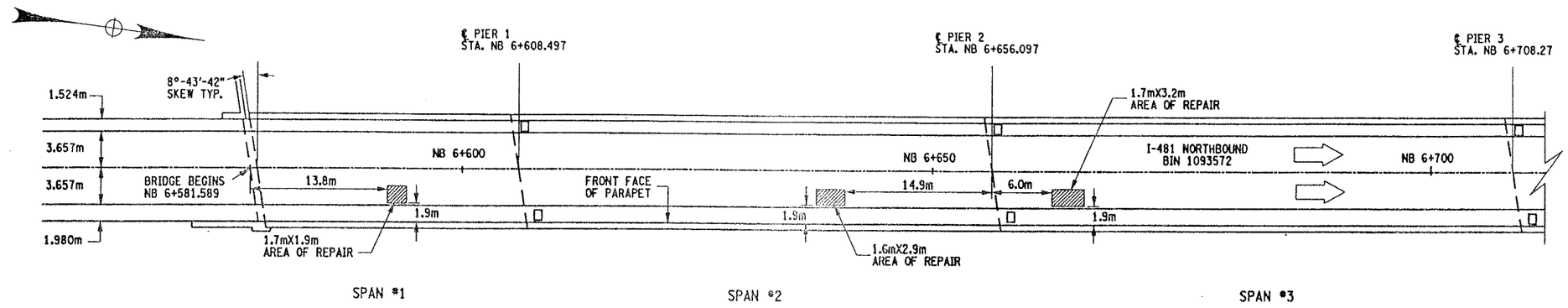

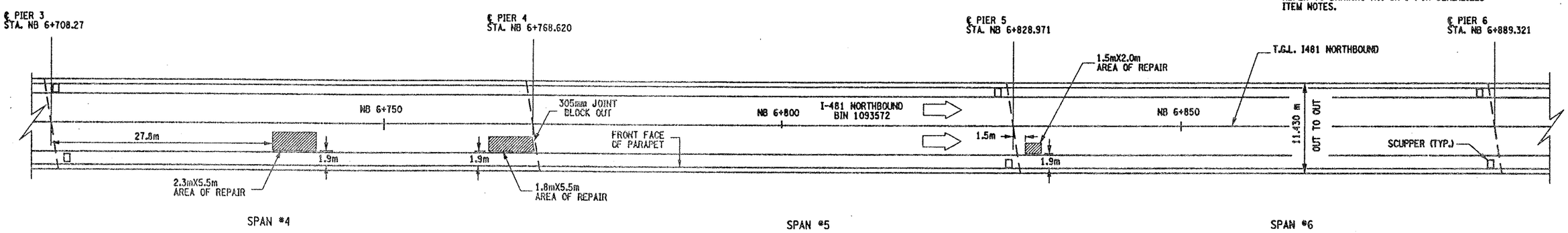

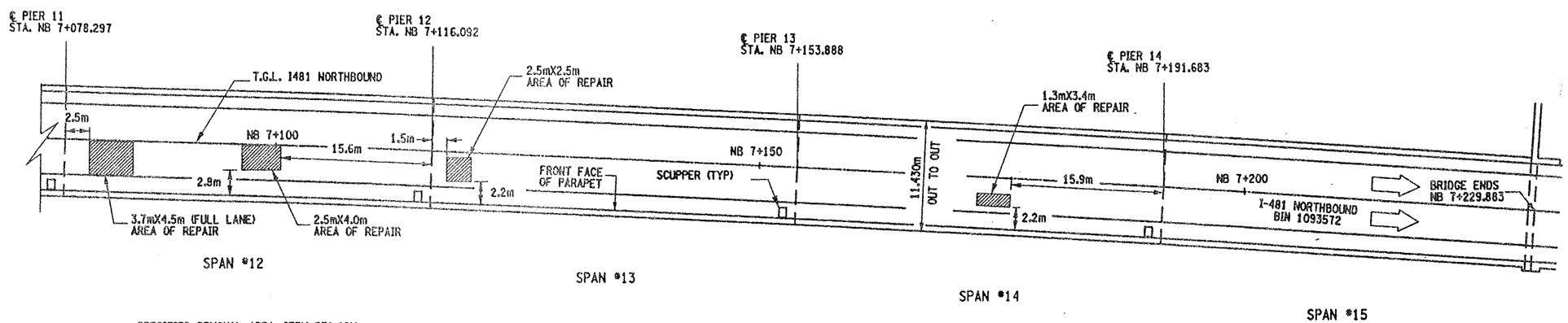

PLAN VIEW OF SPOT DECK REPAIRS

NOT TO SCALE

ALL DIMENSIONS ARE IN m UNLESS OTHERWISE NOTED

GENERAL NOTES:

THIS WORK ONLY PERTAINS TO BIN 1093572 NB.

THE AREAS SHOWN ARE THE RESULTS OF FIELD INVESTIGATIONS AND ARE ONLY APPROXIMATE. THE ACTUAL LIMITS SHALL BE AS DIRECTED BY ENGINEER.

NO FULL DEPTH SLAB REPAIRS ARE EXPECTED AT THESE LOCATIONS.

REFER TO DRAWING NO. GN-1 FOR SERIALIZED ITEM NOTES.

REMOVAL NOTES:

ORIGINAL BRIDGE DECK 203mm MONOLITHIC SLAB. A 38mm CONC. OVERLAY HAS BEEN ADDED.

THESE LOCATIONS ARE CURRENTLY FILLED WITH ASPHALT (BLACKTOP). DEPTH OF ASPHALT IS UNKNOWN, ESTIMATED AT @ 38mm. THE REMOVAL OF THE ASPHALT AND CONCRETE TO LIMITS SHOWN TO BE PAID UNDER ITEM 579.02M.

REMOVE CONCRETE TO LIMITS SHOWN AND TO SOUND CONCRETE, AS ORDER BY ENGINEER.

ALL AREAS THAT ARE REPAIRED SHALL ALSO RECEIVE ITEM 558.01 - TRANSVERSE SAWCUT GROOVING AND ITEM 18559.1896M - PROTECTIVE SEALING.

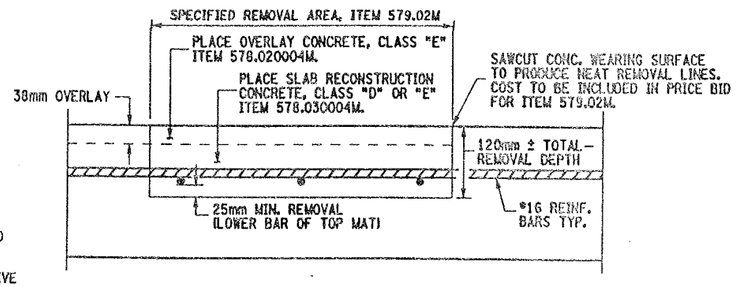

CROSS SECTION VIEW THROUGH REPAIR LOCATION

NOT TO SCALE

ITEMS USED:

ITEM 558.01M - TRANSVERSE SAWCUT GROOVING (SM)
ITEM 18559.1896M - PROTECTIVE SEALING FOR STRUCT. CONC. (SM)
ITEM 578.020004M - OVERLAY CONCRETE, CLASS "E" (SM)
ITEM 578.030004M - SLAB RECONSTRUCTION CONCRETE, CLASS "D" OR "E" (SM)
ITEM 579.02M - REINFORCING BAR EXPOSURE (SM)

AS BUILT REVISIONS

SIGNATURE DATE

INTERSTATE 481
OVER
CSX RAILROAD YARD
BRIDGE DECK REPAIRS

STATE OF NEW YORK
DEPARTMENT OF TRANSPORTATION

FILENAME	REGION	DATE	DRAWING NO.
305613AB.R1A	3	10/02	DR17-1

DESIGN SUPERVISOR ____ JOB MANAGER ____ DESIGNED BY ____ CHECKED BY ____ ESTIMATED BY ____ DRAFTED BY ____ CHECKED BY ____

FED ROAD REG. NO.	STATE	CONTRACT NO.	SHEET NO.	TOTAL SHEETS
1	N.Y.	D259214	325	432

BRIDGE REHABILITATION PROJECT (ELEMENT SPECIFIC)
VARIOUS BRIDGES ON INTERSTATE 481
TOWNS OF DEWITT AND CICERO
ONONDAGA COUNTY
P.I.N. 305613 | B.I.N. 1093572

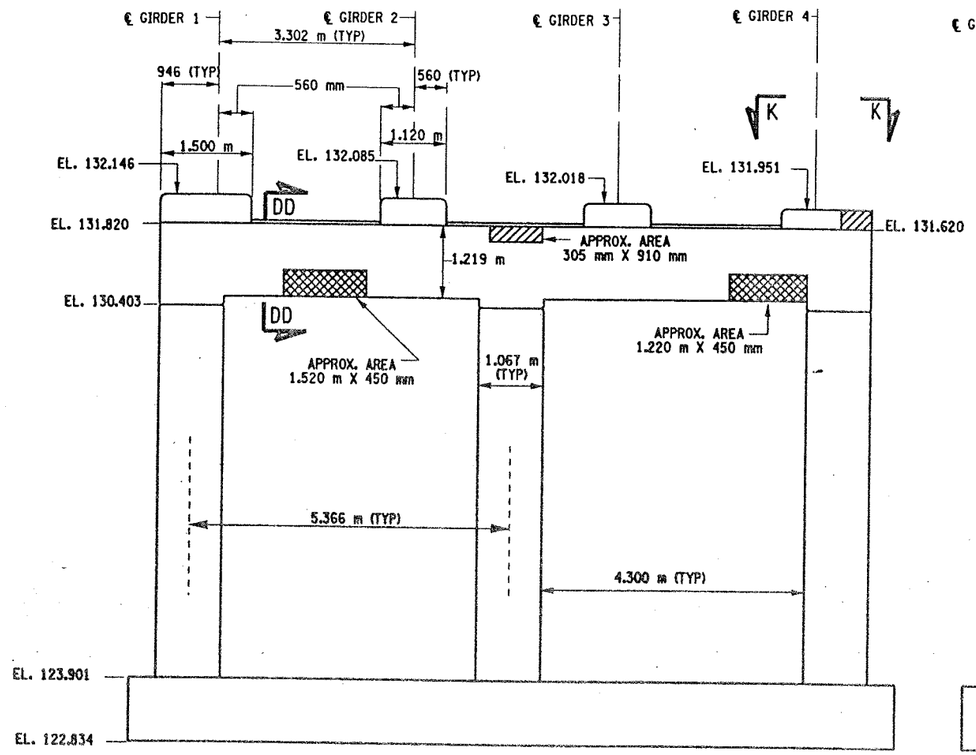

PIER 10 - FRONT FACE (LOOKING NORTH)
BIN 1093572
SCALE: 1 TO 50

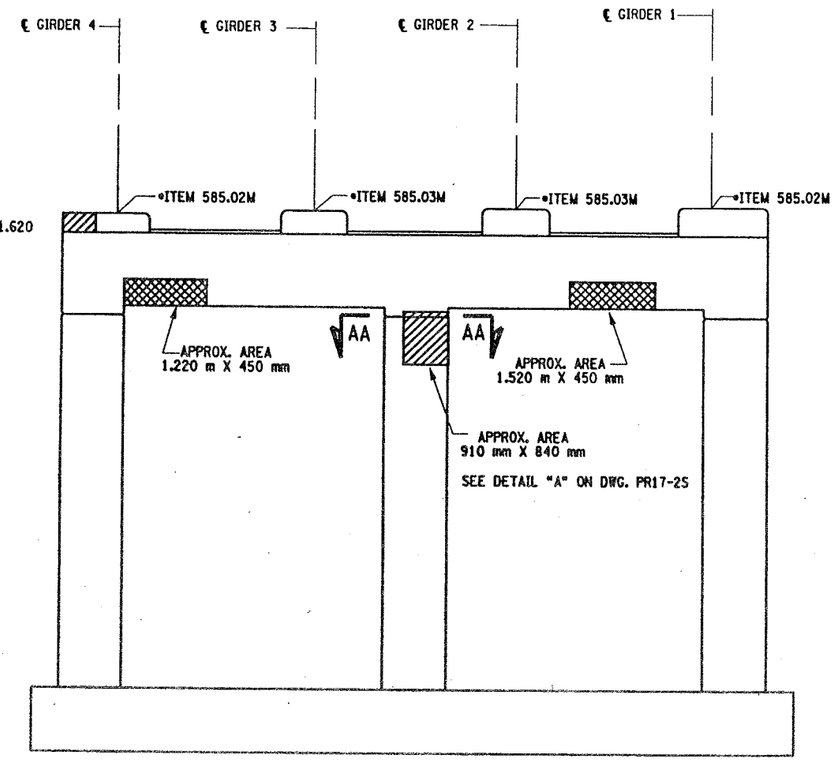

PIER 10 - BACK FACE (LOOKING SOUTH)
BIN 1093572
SCALE: 1 TO 50

NOTES:

1. ALL REINFORCEMENT TO REMAIN.
2. RESTORE TO ORIGINAL DIMENSIONS.
3. PEDESTALS NUMERICALLY NUMBERED FROM WEST TO EAST.
4. FOR THE CONCRETE REPAIR AREAS, THE CONCRETE SHALL BE REMOVED TO AT LEAST 40mm MIN. BEYOND THE ENCOUNTERED REINFORCEMENT AND TO SOUND CONCRETE, A.O.B.E.
5. ELEVATIONS SHOWN ARE FROM ORIGINAL CONTRACT PLANS F.I.S.H. 70-7 AND ARE FOR REFERENCE ONLY.
6. REMOVAL DIMENSIONS SHOWN ON PLANS ARE ESTIMATED AND SHALL BE FIELD VERIFIED BY THE CONTRACTOR PRIOR TO BEGINNING OF REMOVAL OPERATIONS A.O.B.E.
7. PERFORM BEARING RESTORATION TO ALL EXPANSION BEARINGS (TO INCLUDE RESETTING OF UNDEREXTENDED OR OVEREXTENDED BEARINGS). SEE DWG. PR17-1S FOR BEARING RESTORATION NOTES. SEE DWG. BR-10 & BR-11 FOR BEARING RESTORATION DETAILS.
8. FOR SECTION AA-AA SEE DWG. PR17-7N.
9. ALL CONCRETE REMOVAL SHALL BE SAWCUT TO PRODUCE NEAT REMOVAL LINES. COST TO BE INCLUDED IN THE PRICE BID FOR ITEM 582.05M AND ITEM 582.07M.
10. FOR JACKING NOTES SEE DWG PR17-1S.

• PERFORM STRUCTURAL LIFTING UNDER ITEM 585.02M - STRUCTURAL LIFTING OPERATIONS - TYPE B LIFTING AT A PIER) OR ITEM 585.03M - STRUCTURAL LIFTING OPERATIONS - TYPE C LIFTING AT A PIER WHERE THE CONTRACTOR SHALL BE REQUIRED TO LIFT OFF THE FOOTING AND/OR GROUND LEVEL.

JACKING LOADS:

D.L. = 75 MT
L.L. = 50 MT
TOTAL = 125 MT

LEGEND:

ITEM 582.05M - REMOVAL OF STRUCTURAL CONCRETE- REPLACE WITH CLASS A CONCRETE (CM)

ITEM 582.07M - REMOVAL OF STRUCTURAL CONCRETE - REPLACE WITH VERTICAL OVER-HEAD PATCH MATERIAL. (SM)

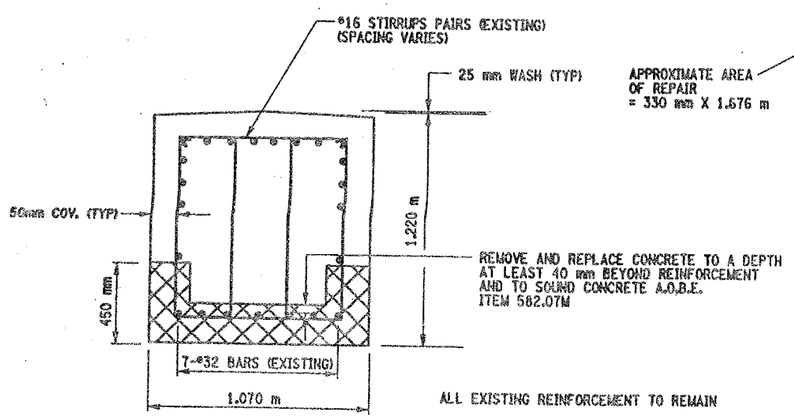

SECTION DD-DD
NOT TO SCALE

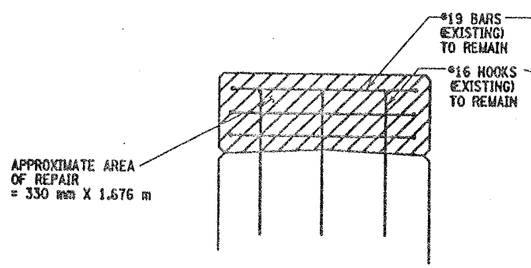

SECTION N-N
NOT TO SCALE

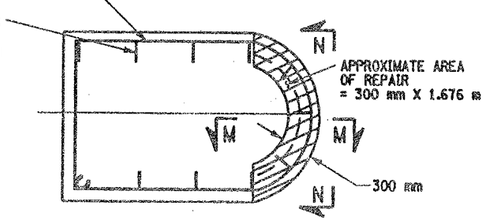

SECTION K-K
NOT TO SCALE

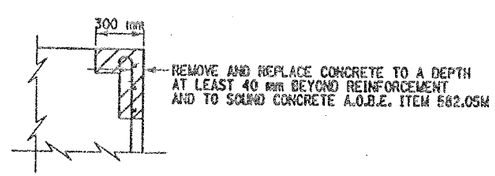

SECTION M-M
NOT TO SCALE

LIST OF ITEMS USED:

ITEM 15565.4302M - BRIDGE BEARING RESTORATION (EA)
ITEM 582.05M - REM. OF STRUC. CONC. - REPLACE WITH CLASS A CONCRETE (CM)
ITEM 582.07M - REM. OF STRUC. CONC. - REPL. W/ VERT. OVERHEAD PATCH MAT'L. (SM)
ITEM 585.02M - STRUCTURAL LIFTING OPERATIONS - TYPE B (EA)
ITEM 585.03M - STRUCTURAL LIFTING OPERATION - TYPE C (EA)

ALL DIMENSIONS ARE IN mm UNLESS OTHERWISE NOTED

AS BUILT REVISIONS

SIGNATURE | DATE

INTERSTATE 481 NB
OVER
CSX RAILROAD YARD
PIER 10

STATE OF NEW YORK
DEPARTMENT OF TRANSPORTATION

FILENAME	REGION	DATE	DRAWING NO.
305613AE.P10	3	10/02	PR17-10N

DESIGN SUPERVISOR ____ JOB MANAGER ____ DESIGNED BY ____ CHECKED BY ____ ESTIMATED BY ____ DRAFTED BY ____ CHECKED BY ____

FED ROAD REG. NO.	STATE	CONTRACT NO.	SHEET NO.	TOTAL SHEETS
1	N.Y.	D259214	326	432

BRIDGE REHABILITATION PROJECT (ELEMENT SPECIFIC)
VARIOUS BRIDGES ON INTERSTATE 481
TOWNS OF DEWITT AND CICERO
ONONDAGA COUNTY
P.I.N. 305613 | B.I.N. 1093572

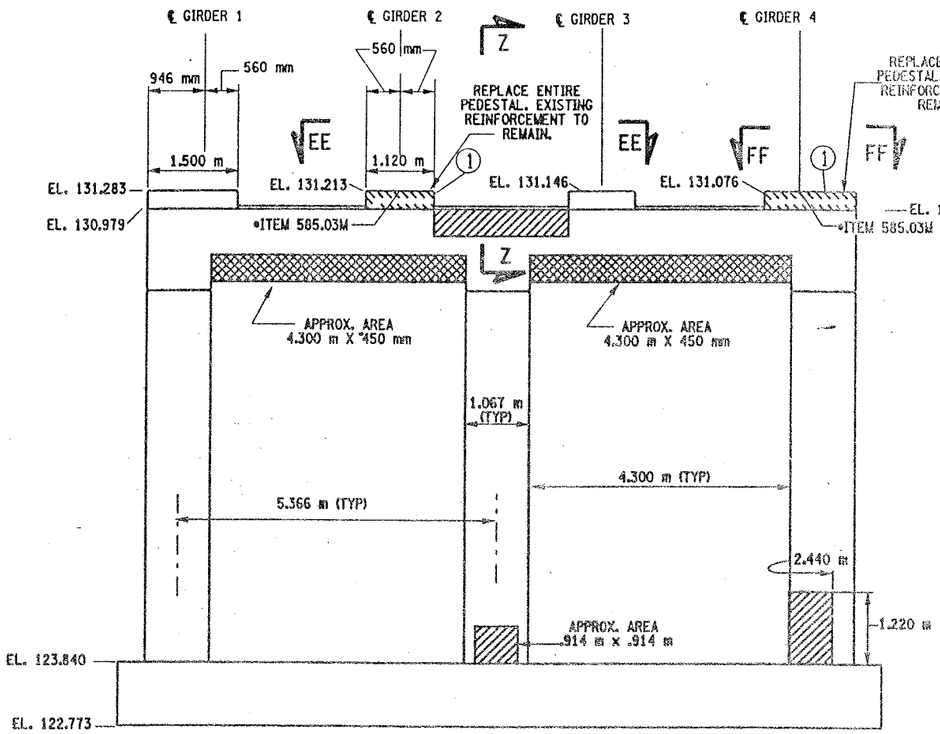

PIER 11 - FRONT FACE (LOOKING NORTH)
BIN 1093572
SCALE: 1 TO 50

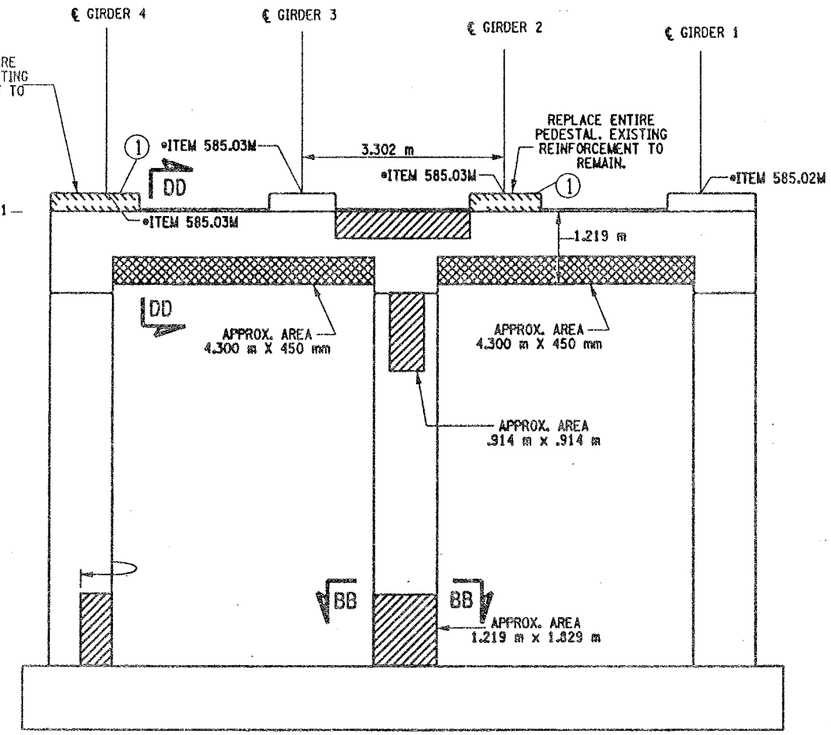

PIER 11- BACK FACE (LOOKING SOUTH)
BIN 1093572
SCALE: 1 TO 50

NOTES:

1. ALL REINFORCEMENT TO REMAIN.
2. RESTORE TO ORIGINAL DIMENSIONS.
3. PEDESTALS NUMERICALLY NUMBERED FROM WEST TO EAST.
4. FOR THE CONCRETE REPAIR AREAS, THE CONCRETE SHALL BE REMOVED TO AT LEAST 40mm MIN. BEYOND THE ENCOUNTERED REINFORCEMENT AND TO SOUND CONCRETE, A.O.B.E.
5. ELEVATIONS SHOWN ARE FROM ORIGINAL CONTRACT PLANS F.I.S.H. 70-7 AND ARE FOR REFERENCE ONLY.
6. REMOVAL DIMENSIONS SHOWN ON PLANS ARE ESTIMATED AND SHALL BE FIELD VERIFIED BY THE CONTRACTOR PRIOR TO BEGINNING OF REMOVAL OPERATIONS A.O.B.E.
7. PERFORM BEARING RESTORATION TO ALL EXPANSION BEARINGS (TO INCLUDE RESETTING OF UNDEREXTENDED OR OVEREXTENDED BEARINGS). SEE DWG. PR17-1S FOR BEARING RESTORATION NOTES. SEE DWG. BR-10 & BR-11 FOR BEARING RESTORATION DETAILS.
8. SEE DWG PR17-10N FOR SECTION DD-DD.
9. SEE DWG. PR17-12S FOR SECTION BB-BB.
10. SEE DWG. PR17-7N FOR SECTION Z-Z.
11. PEDESTALS 2 AND 4 SHALL BE REPLACED TO EXISTING DIMENSIONS. ITEM 555.0105 M
12. ALL CONCRETE REMOVAL SHALL BE SAWCUT TO PRODUCE NEAT REMOVAL LINES. COST TO BE INCLUDED IN THE PRICE BID FOR ITEM 582.05M AND ITEM 582.07M.
13. FOR JACKING NOTES SEE DWG PR17-1S.

• PERFORM STRUCTURAL LIFTING UNDER ITEM 585.02M - STRUCTURAL LIFTING OPERATIONS - TYPE B (LIFTING AT A PIER) OR ITEM 585.03M - STRUCTURAL LIFTING OPERATIONS - TYPE C (LIFTING AT A PIER WHERE THE CONTRACTOR SHALL BE REQUIRED TO LIFT OFF THE FOOTING AND/OR GROUND LEVEL.

JACKING LOADS:

D.L. = 75 MT
L.L. = 50 MT
TOTAL = 125 MT

(1) INDICATES CONCRETE PLACEMENT NUMBER

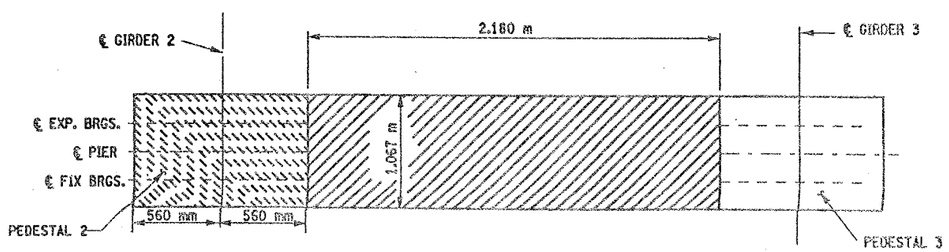

SECTION EE-EE
NOT TO SCALE

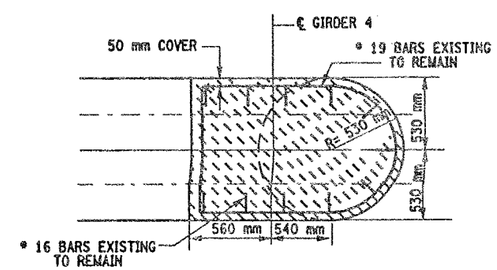

SECTION FF-FF
NOT TO SCALE

LEGEND:

- ITEM 582.05M - REMOVAL OF STRUCTURAL CONCRETE- REPLACE WITH CLASS A CONCRETE. (CM)
- ITEM 582.07M - REMOVAL OF STRUCTURAL CONCRETE - REPLACE WITH VERTICAL OVER-HEAD PATCH MATERIAL. (SM)
- ITEM 580.01 M - REMOVAL OF STRUCTURAL CONCRETE. (CM) AND ITEM 555.0105 M - CONCRETE FOR STRUCTURES CLASS A. (CM)

ALL DIMENSIONS ARE IN mm UNLESS OTHERWISE NOTED

CONCRETE TABLE (m^3)		
PLACEMENT	QUANTITY	ITEM NO.
1	0.80	555.0105M

LIST OF ITEMS USED

ITEM 555.0105M - CONCRETE FOR STRUCTURES, CLASS A (CM)
ITEM 15565.4302M - BRIDGE BEARING RESTORATION (EA)
ITEM 580.01M - REMOVAL OF STRUCTURAL CONCRETE (CM)
ITEM 582.05M - REM. OF STRUC. CONC. - REPLACE WITH CLASS A CONCRETE (CM)
ITEM 582.07M - REM. OF STRUC. CONC. - REPL. W/ VERT. OVERHEAD PATCH MAT'L (SM)
ITEM 585.02M - STRUCTURAL LIFTING OPERATIONS - TYPE B (EA)
ITEM 585.03M - STRUCTURAL LIFTING OPERATION - TYPE C (EA)

AS BUILT REVISIONS

SIGNATURE | DATE

INTERSTATE 481 NB
OVER
CSX RAILROAD YARD
PIER 11

STATE OF NEW YORK
DEPARTMENT OF TRANSPORTATION

FILENAME	REGION	DATE	DRAWING NO.
305613AE.P11	3	10/02	PR17-11N

DESIGN SUPERVISOR ____ JOB MANAGER ____ DESIGNED BY ____ CHECKED BY ____ ESTIMATED BY ____ DRAFTED BY ____ CHECKED BY ____

FED ROAD REG. NO.	STATE	CONTRACT NO.	SHEET NO.	TOTAL SHEETS
1	N.Y.	D259214	327	432

BRIDGE REHABILITATION PROJECT (ELEMENT SPECIFIC)
VARIOUS BRIDGES ON INTERSTATE 481
TOWNS OF DEWITT AND CICERO
ONONDAGA COUNTY
P.I.N. 305613 B.I.N. 1093572

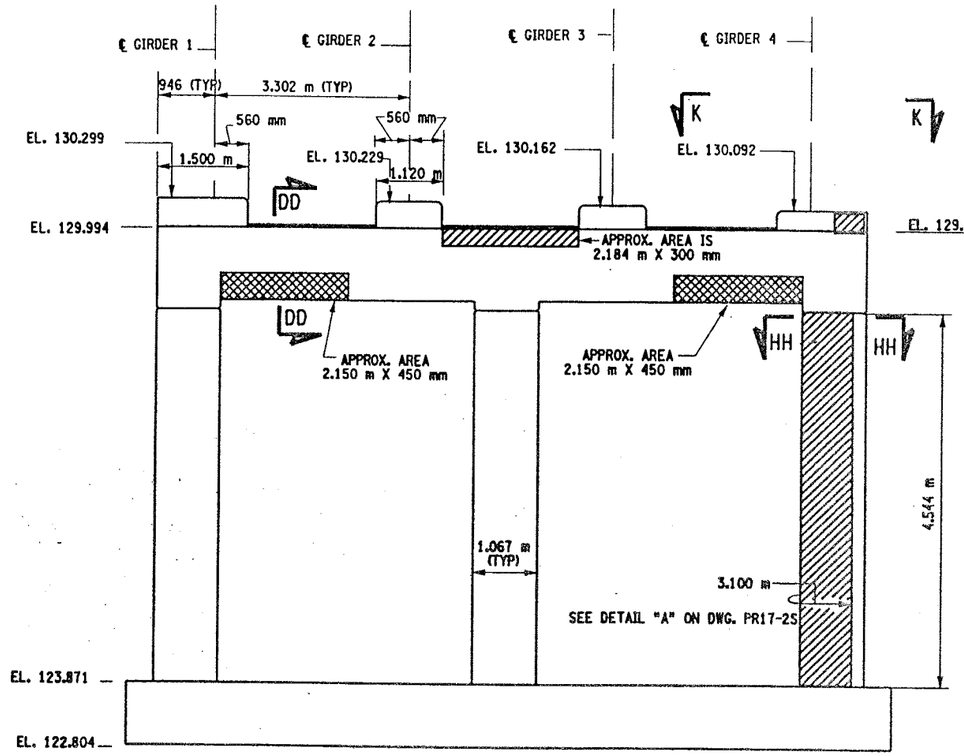

PIER 12 - FRONT FACE (LOOKING NORTH)
BIN 1093572
SCALE: 1 TO 50

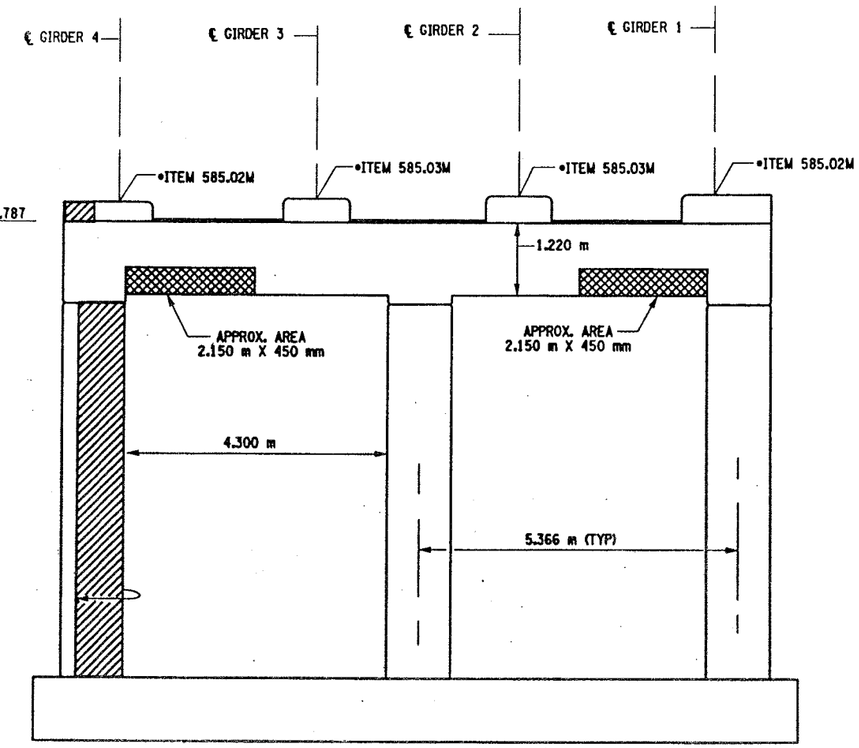

PIER 12 - BACK FACE (LOOKING SOUTH)
BIN 1093572
SCALE: 1 TO 50

NOTES:

1. ALL REINFORCEMENT TO REMAIN.
2. RESTORE TO ORIGINAL DIMENSIONS.
3. PEDESTALS NUMERICALLY NUMBERED FROM WEST TO EAST.
4. FOR THE CONCRETE REPAIR AREAS, THE CONCRETE SHALL BE REMOVED TO AT LEAST 40mm MIN. BEYOND THE ENCOUNTERED REINFORCEMENT AND TO SOUND CONCRETE, A.O.B.E.
5. ELEVATIONS SHOWN ARE FROM ORIGINAL CONTRACT PLANS F.I.S.H. 70-7 AND ARE FOR REFERENCE ONLY.
6. REMOVAL DIMENSIONS SHOWN ON PLANS ARE ESTIMATED AND SHALL BE FIELD VERIFIED BY THE CONTRACTOR PRIOR TO BEGINNING OF REMOVAL OPERATIONS A.O.B.E.
7. PERFORM BEARING RESTORATION TO ALL EXPANSION BEARINGS (TO INCLUDE RESETTING OF UNDEREXTENDED OR OVEREXTENDED BEARINGS). SEE DWG. PR17-1S FOR BEARING RESTORATION NOTES. SEE DWG. BR-10 & BR-11 FOR BEARING RESTORATION DETAILS.
8. SEE DWG PR17-10N FOR SECTION DD-DD.
9. ALL CONCRETE REMOVAL SHALL BE SAWCUT TO PRODUCE NEAT REMOVAL LINES. COST TO BE INCLUDED IN THE PRICE BID FOR ITEM 582.05M AND 582.07M.
10. FOR JACKING NOTES SEE DWG PR17-1S.

• PERFORM STRUCTURAL LIFTING UNDER ITEM 585.02M - STRUCTURAL LIFTING OPERATIONS - TYPE B (LIFTING AT A PIER) OR ITEM 585.03M - STRUCTURAL LIFTING OPERATIONS - TYPE C (LIFTING AT A PIER WHERE THE CONTRACTOR SHALL BE REQUIRED TO LIFT OFF THE FOOTING AND/OR GROUND LEVEL.

JACKING LOADS:

D.L. = 75 MT
L.L. = 50 MT
TOTAL = 125 MT

LEGEND:

ITEM 582.05M - REMOVAL OF STRUCTURAL CONCRETE- REPLACE WITH CLASS A CONCRETE. (CM)

ITEM 582.07M - REMOVAL OF STRUCTURAL CONCRETE - REPLACE WITH VERTICAL OVER-HEAD PATCH MATERIAL. (SM)

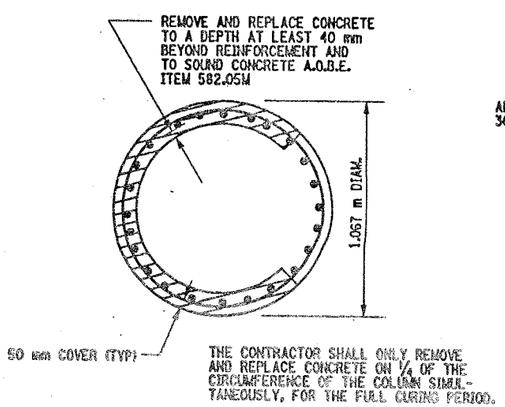

SECTION HH-HH
NOT TO SCALE

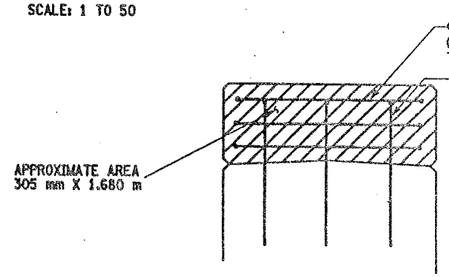

SECTION N-N
NOT TO SCALE

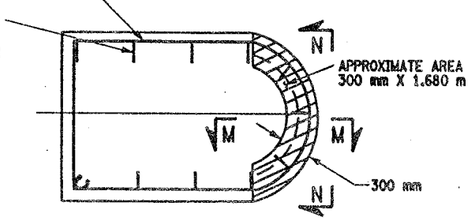

SECTION K-K
NOT TO SCALE

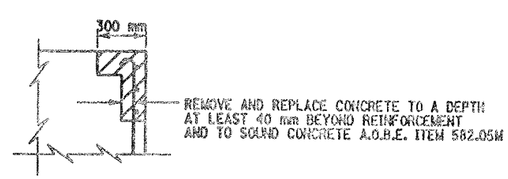

SECTION M-M
NOT TO SCALE

LIST OF ITEMS USED:

ITEM 15565.4302M - BRIDGE BEARING RESTORATION (EA)
ITEM 582.05M - REM. OF STRUC. CONC. - REPLACE WITH CLASS A CONCRETE (CM)
ITEM 582.07M - REM. OF STRUC. CONC. - REPL. W/ VERT. OVERHEAD PATCH MAT'L (SM)
ITEM 585.02M - STRUCTURAL LIFTING OPERATIONS - TYPE B (EA)
ITEM 585.03M - STRUCTURAL LIFTING OPERATION - TYPE C (EA)

ALL DIMENSIONS ARE IN mm UNLESS OTHERWISE NOTED

AS BUILT REVISIONS

SIGNATURE DATE

INTERSTATE 481 NB
OVER
CSX RAILROAD YARD
PIER 12

STATE OF NEW YORK
DEPARTMENT OF TRANSPORTATION

FILENAME	REGION	DATE	DRAWING NO.
305613AE.P12	3	10/02	PR17-12N

DESIGN SUPERVISOR ____ JOB MANAGER ____ DESIGNED BY ____ ESTIMATED BY ____ DRAFTED BY ____ CHECKED BY ____ CHECKED BY ____

FED ROAD REG. NO.	STATE	CONTRACT NO.	SHEET NO.	TOTAL SHEETS
1	N.Y.	D259214	328	432

BRIDGE REHABILITATION PROJECT (ELEMENT SPECIFIC)
VARIOUS BRIDGES ON INTERSTATE 481
TOWNS OF DEWITT AND CICERO
ONONDAGA COUNTY
P.I.N. 305613 B.I.N. 1093572

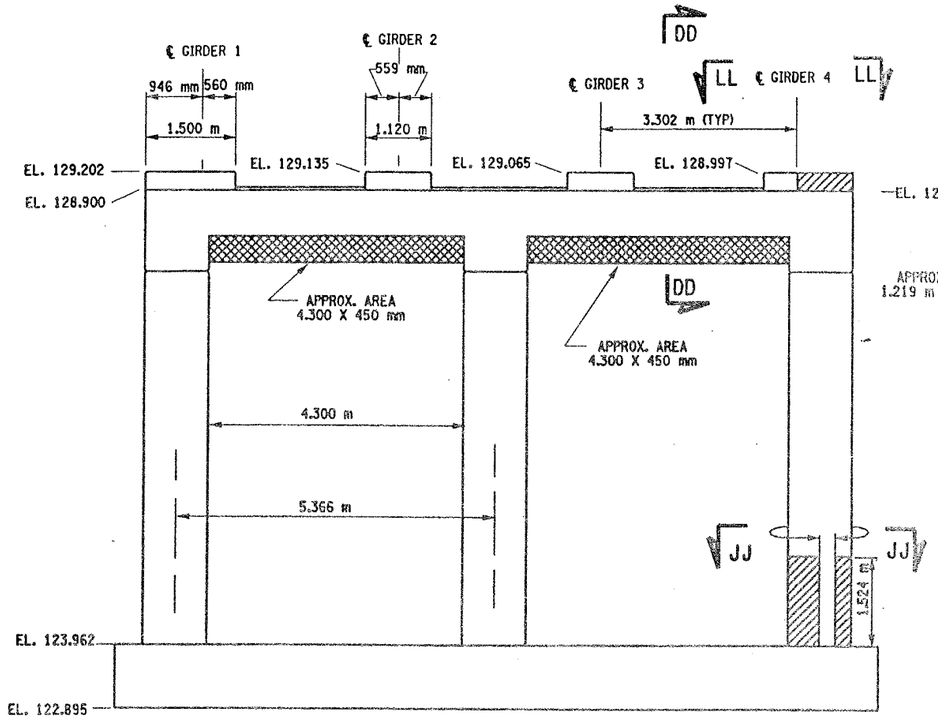

PIER 13 - FRONT FACE (LOOKING NORTH)
BIN 1093572
SCALE: 1 TO 50

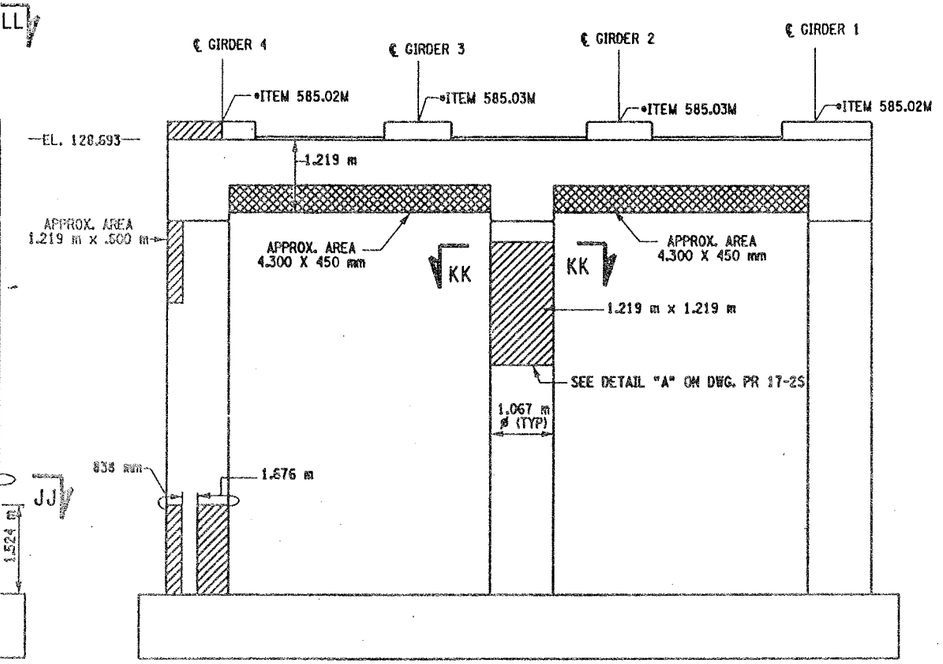

PIER 13- BACK FACE (LOOKING SOUTH)
BIN 1093572
SCALE: 1 TO 50

NOTES:

1. ALL REINFORCEMENT TO REMAIN.
2. RESTORE TO ORIGINAL DIMENSIONS.
3. PEDESTALS NUMERICALLY NUMBERED FROM WEST TO EAST.
4. FOR THE CONCRETE REPAIR AREAS, THE CONCRETE SHALL BE REMOVED TO AT LEAST 40mm MIN. BEYOND THE ENCOUNTERED REINFORCEMENT AND TO SOUND CONCRETE, A.O.B.E.
5. ELEVATIONS SHOWN ARE FROM ORIGINAL CONTRACT PLANS F.I.S.H. 70-7 AND ARE FOR REFERENCE ONLY.
6. REMOVAL DIMENSIONS SHOWN ON PLANS ARE ESTIMATED AND SHALL BE FIELD VERIFIED BY THE CONTRACTOR PRIOR TO BEGINNING OF REMOVAL OPERATIONS A.O.B.E.
7. PERFORM BEARING RESTORATION TO ALL EXPANSION BEARINGS (TO INCLUDE RESETTING OF UNDEREXTENDED OR OVEREXTENDED BEARINGS). SEE DWG. PR17-1S FOR BEARING RESTORATION NOTES. SEE DWG. BR-10 & BR-11 FOR BEARING RESTORATION DETAILS.
8. SEE DWG. PR 17-10N FOR SECTION DD-DD.
9. ALL CONCRETE REMOVAL SHALL BE SAWCUT TO PRODUCE NEAT REMOVAL LINES. COST TO BE INCLUDED IN THE PRICE BID FOR ITEM 582.05M AND 582.07M.
10. FOR JACKING NOTES SEE DWG PR17-1S.

• PERFORM STRUCTURAL LIFTING UNDER ITEM 585.02M - STRUCTURAL LIFTING OPERATIONS - TYPE B (LIFTING AT A PIER) OR ITEM 585.03M - STRUCTURAL LIFTING OPERATIONS - TYPE C (LIFTING AT A PIER WHERE THE CONTRACTOR SHALL BE REQUIRED TO LIFT OFF THE FOOTING AND/OR GROUND LEVEL.

JACKING LOADS:

D.L. = 75 MT
L.L. = 50 MT
TOTAL = 125 MT

LEGEND:

ITEM 582.05M - REMOVAL OF STRUCTURAL CONCRETE- REPLACE WITH CLASS A CONCRETE. (CM)

ITEM 582.07M - REMOVAL OF STRUCTURAL CONCRETE - REPLACE WITH VERTICAL OVER-HEAD PATCH MATERIAL. (SM)

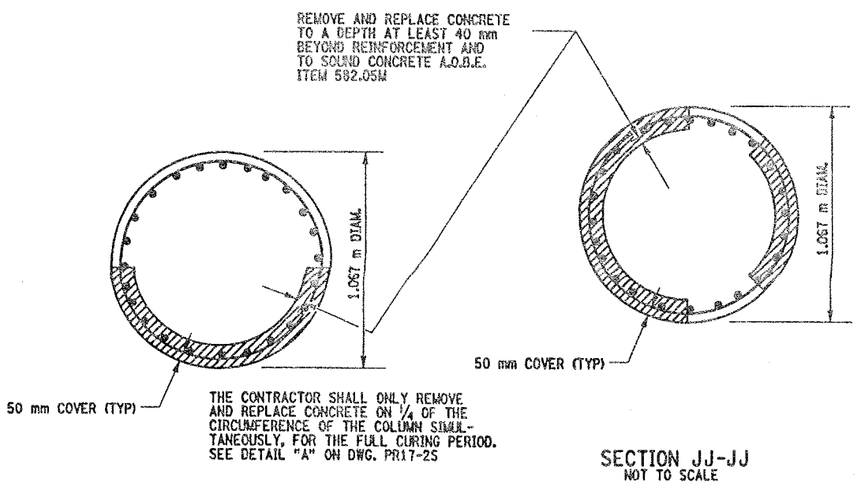

SECTION KK-KK
NOT TO SCALE

SECTION JJ-JJ
NOT TO SCALE

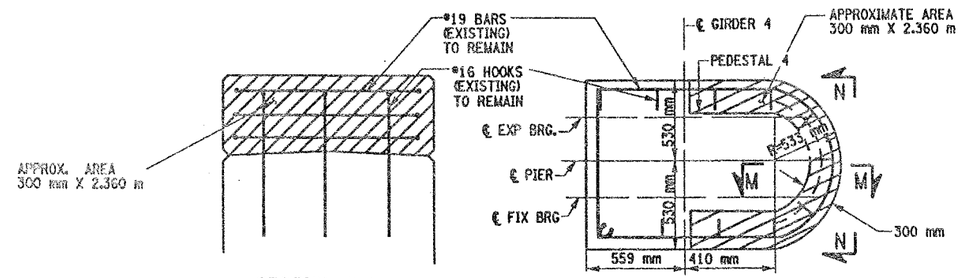

SECTION N-N
NOT TO SCALE

SECTION LL- LL
NOT TO SCALE

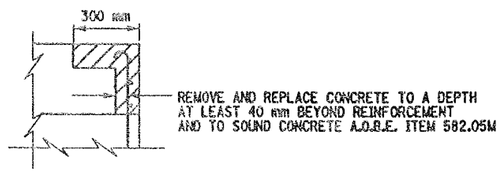

SECTION M-M
NOT TO SCALE

LIST OF ITEMS USED:

ITEM 15565.4302M - BRIDGE BEARING RESTORATION (EA)
ITEM 582.05M - REM. OF STRUC. CONC. - REPLACE WITH CLASS A CONCRETE (CM)
ITEM 582.07M - REM. OF STRUC. CONC. - REPL. W/ VERT. OVERHEAD PATCH MAT.L (SM)
ITEM 585.02M - STRUCTURAL LIFTING OPERATIONS - TYPE B (EA)
ITEM 585.03M - STRUCTURAL LIFTING OPERATION - TYPE C (EA)

ALL DIMENSIONS ARE IN mm UNLESS OTHERWISE NOTED

AS BUILT REVISIONS

SIGNATURE DATE

INTERSTATE 481 NB
OVER
CSX RAILROAD YARD
PIER 13

STATE OF NEW YORK
DEPARTMENT OF TRANSPORTATION

FILENAME	REGION	DATE	DRAWING NO.
305613AE.P13	3	10/02	PR17-13N

DESIGN SUPERVISOR ____ JOB MANAGER ____ DESIGNED BY ____ CHECKED BY ____ ESTIMATED BY ____ DRAFTED BY ____ CHECKED BY ____

FED ROAD REG. NO.	STATE	CONTRACT NO.	SHEET NO.	TOTAL SHEETS
1	N.Y.	D259214	329	432

BRIDGE REHABILITATION PROJECT (ELEMENT SPECIFIC)
VARIOUS BRIDGES ON INTERSTATE 481
TOWNS OF DEWITT AND CICERO
ONONDAGA COUNTY
P.I.N. 305613 B.I.N. 1093572

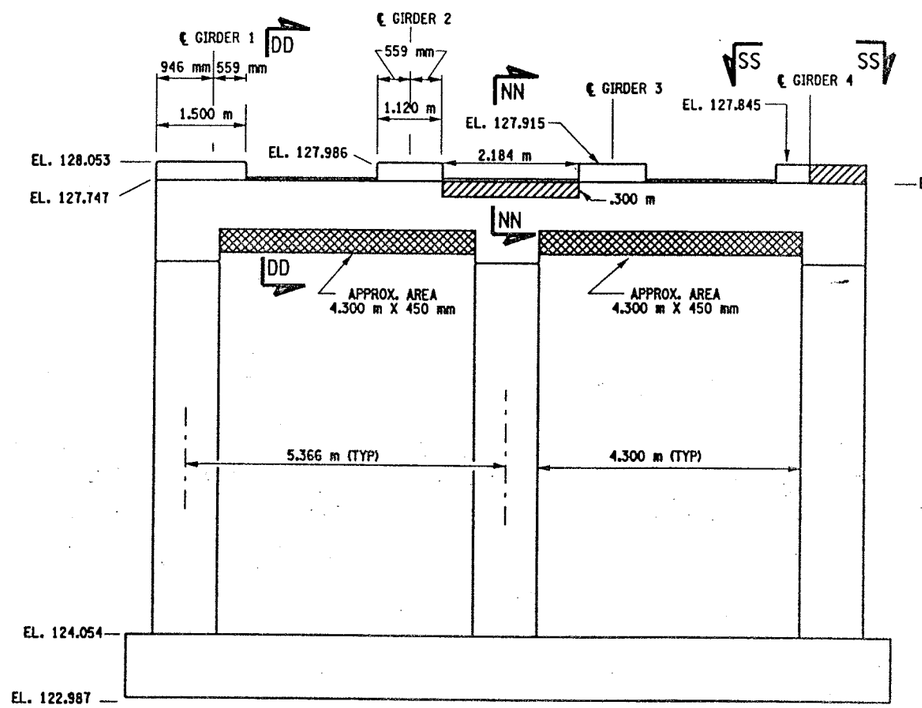

PIER 14 - FRONT FACE (LOOKING NORTH)
BIN 1093572
SCALE: 1 TO 50

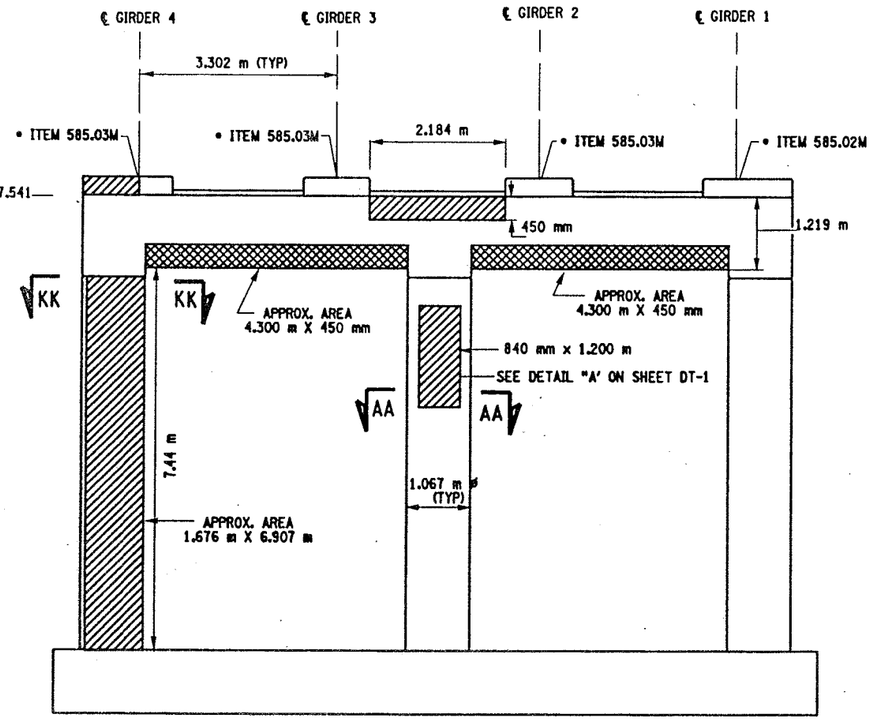

PIER 14 - BACK FACE (LOOKING SOUTH)
BIN 1093572
SCALE: 1 TO 50

NOTES:

1. ALL REINFORCEMENT TO REMAIN.
2. RESTORE TO ORIGINAL DIMENSIONS.
3. PEDESTALS NUMERICALLY NUMBERED FROM WEST TO EAST.
4. FOR THE CONCRETE REPAIR AREAS, THE CONCRETE SHALL BE REMOVED TO AT LEAST 40mm MIN. BEYOND THE ENCOUNTERED REINFORCEMENT AND TO SOUND CONCRETE, A.O.B.E.
5. ELEVATIONS SHOWN ARE FROM ORIGINAL CONTRACT PLANS F.I.S.H. 70-7 AND ARE FOR REFERENCE ONLY.
6. REMOVAL DIMENSIONS SHOWN ON PLANS ARE ESTIMATED AND SHALL BE FIELD VERIFIED BY THE CONTRACTOR PRIOR TO BEGINNING OF REMOVAL OPERATIONS A.O.B.E.
7. PERFORM BEARING RESTORATION TO ALL EXPANSION BEARINGS (TO INCLUDE RESETTING OF UNDEREXTENDED OR OVEREXTENDED BEARINGS). SEE DWG. PR17-1S FOR BEARING RESTORATION NOTES. SEE DWG. BR-10 & BR-11 FOR BEARING RESTORATION DETAILS.
8. SEE DWG. PR17-10N FOR SECTION DD-DD.
9. SEE DWG. PR17-7N FOR SECTION AA-AA.
10. SEE DWG. PR17-13N FOR SECTION KK-KK.
11. ALL CONCRETE REMOVAL SHALL BE SAWCUT TO PRODUCE NEAT REMOVAL LINES. COST TO BE INCLUDED IN THE PRICE BID FOR ITEM 582.05M AND ITEM 582.07M.
12. FOR JACKING NOTES SEE DWG PR17-1S.

• PERFORM STRUCTURAL LIFTING UNDER ITEM 585.02M - STRUCTURAL LIFTING OPERATIONS - TYPE B (LIFTING AT A PIER) OR ITEM 585.03M - STRUCTURAL LIFTING OPERATIONS - TYPE C (LIFTING AT A PIER WHERE THE CONTRACTOR SHALL BE REQUIRED TO LIFT OFF THE FOOTING AND/OR GROUND LEVEL.

JACKING LOADS:

D.L. = 75 MT
L.L. = 50 MT
TOTAL = 125 MT

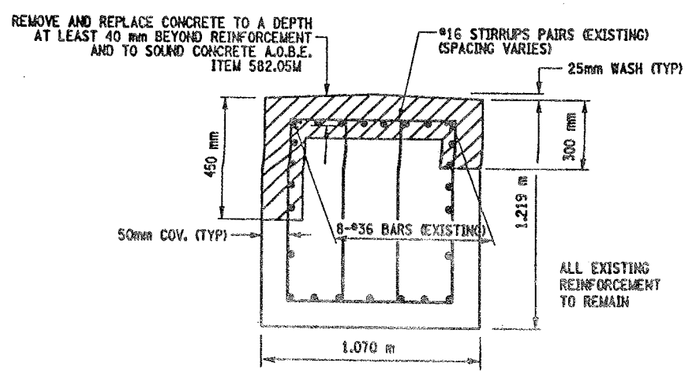

SECTION NN-NN
NOT TO SCALE

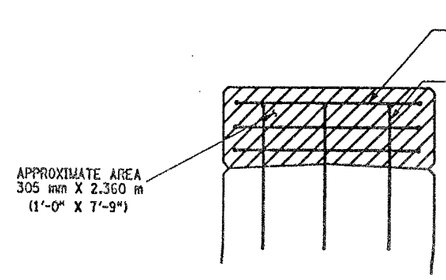

SECTION N-N
NOT TO SCALE

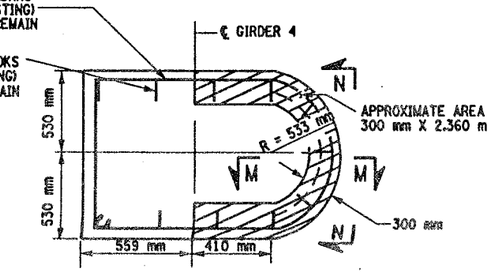

SECTION SS-SS
NOT TO SCALE

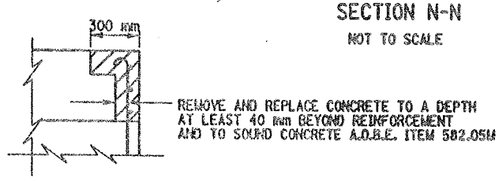

SECTION M-M
NOT TO SCALE

LIST OF ITEMS USED:

ITEM 15565.4302M - BRIDGE BEARING RESTORATION (EA)
ITEM 582.05M - REM. OF STRUC. CONC. - REPLACE WITH CLASS A CONCRETE (CM)
ITEM 582.07M - REM. OF STRUC. CONC. - REPL. W/ VERT. OVERHEAD PATCH MAT'L. (SM)
ITEM 585.02M - STRUCTURAL LIFTING OPERATIONS - TYPE B (EA)
ITEM 585.03M - STRUCTURAL LIFTING OPERATION - TYPE C (EA)

LEGEND:

ITEM 582.05M - REMOVAL OF STRUCTURAL CONCRETE- REPLACE WITH CLASS A CONCRETE. (CM)

ITEM 582.07M - REMOVAL OF STRUCTURAL CONCRETE - REPLACE WITH VERTICAL OVER-HEAD PATCH MATERIAL. (SM)

ALL DIMENSIONS ARE IN mm UNLESS OTHERWISE NOTED

AS BUILT REVISIONS

SIGNATURE DATE

INTERSTATE 481 NB
OVER
CSX RAILROAD YARD
PIER 14

STATE OF NEW YORK
DEPARTMENT OF TRANSPORTATION

FILENAME	REGION	DATE	DRAWING NO.
305613AE.P14	3	10/02	PR17-14N

CHECKED BY
DRAFTED BY
ESTIMATED BY
CHECKED BY
DESIGNED BY
JOB MANAGER
DESIGN SUPERVISOR

FED ROAD REG. NO.	STATE	CONTRACT NO.	SHEET NO.	TOTAL SHEETS
1	N.Y.	D259214	330	432

BRIDGE REHABILITATION PROJECT (ELEMENT SPECIFIC)
VARIOUS BRIDGES ON INTERSTATE 481
TOWNS OF DEWITT AND CICERO
ONONDAGA COUNTY
P.I.N. 305613 B.I.N. 1093571 & 1093572

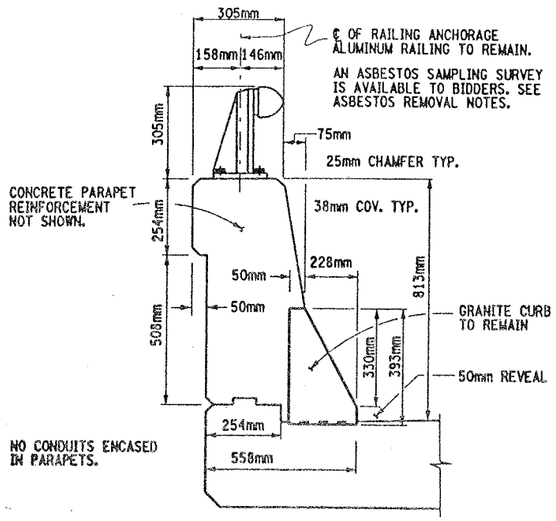

TYPICAL SECTION THRU SUPERSTRUCTURE
PARAPET CONCRETE DETAILS

NOT TO SCALE

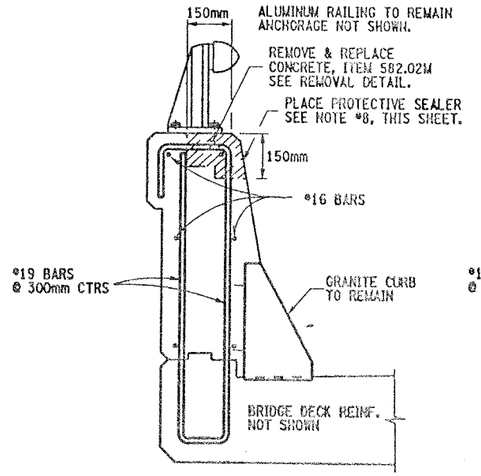

(I) REPAIR DETAILS
150mmX150mm TOP

NOT TO SCALE

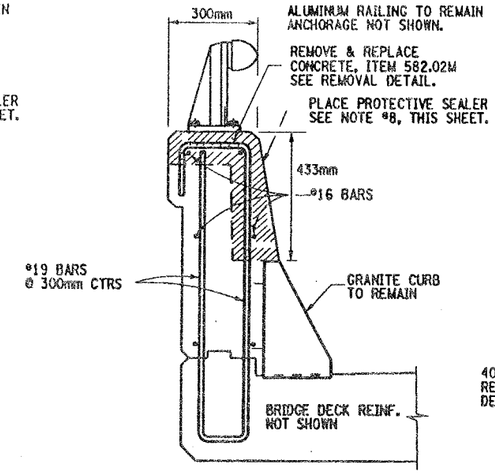

(II) REPAIR DETAILS
FULL TOP & FRONT FACE

NOT TO SCALE

CONCRETE REMOVAL NOTES:

REMOVE ALL DETERIORATED CONCRETE TO SOUND CONCRETE AND AT LEAST 40mm BEYOND ENCOUNTERED REINFORCEMENT BARS, AOBE. PAYMENT TO BE PAID UNDER ITEM 582.05M.

CONCRETE REMOVAL, SAWCUT 6mm DEPTH MINIMUM TO PRODUCE NEAT REMOVAL LINES, ALL COSTS SHALL BE INCLUDED IN PRICE BID FOR ITEM 582.05M.

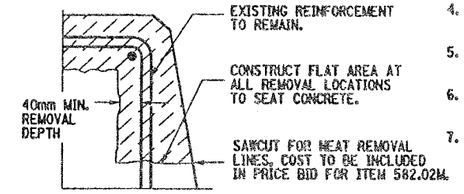

TYPICAL REMOVAL DETAIL

NOT TO SCALE

CONCRETE PARAPET REPAIR NOTES:

1. ALUMINUM RAILING TO REMAIN, ANCHORAGE NOT SHOWN.
2. EXISTING PARAPET REINFORCEMENT TO REMAIN.
3. GRANITE CURB TO REMAIN, ANCHOR BARS NOT SHOWN.
4. REMOVAL OF CONCRETE TO LIMITS SHOWN, AOBE. SEE TYPICAL REMOVAL DETAIL, THIS SHEET.
5. ALL DIMENSIONS SHOWN FOR CONCRETE REMOVAL ARE APPROXIMATE AND SHALL BE FIELD VERIFIED.
6. CONTRACTOR SHALL RESTORE CONCRETE PARAPET TO ORIGINAL DIMENSIONS.
7. IT IS DESIRABLE TO RETAIN ALL EXISTING GRANITE CURB, BUT AT SOME LOCATIONS ADJACENT TO THE JOINT BLOCK-OUTS IT MAY BE NECESSARY TO REPLACE OR REPAIR THE SECTION OF CURB, TO THE SATISFACTION OF THE ENGINEER. COST TO BE INCLUDE IN PRICE BID FOR ITEM 582.05M.
8. AFTER PARAPET REPAIRS ARE COMPLETED AND SUFFICIENT CURE TIME AS DECIDED BY ENGINEER, APPLY A COATING TYPE PROTECTIVE SEALERS WHICH MEETS MATERIAL SPECIFICATION 717-04. THIS PROTECTIVE SEALER SHALL BE APPLIED TO THE FRONT FACE AND TOP OF ALL PARAPETS (REPAIRED AREAS & ORIGINAL AREAS) TO ENSURE A UNIFORMED APPEARANCE. COST OF THIS SEALER TO BE INCLUDED IN PRICE BID FOR ITEM 18559.1696 M.

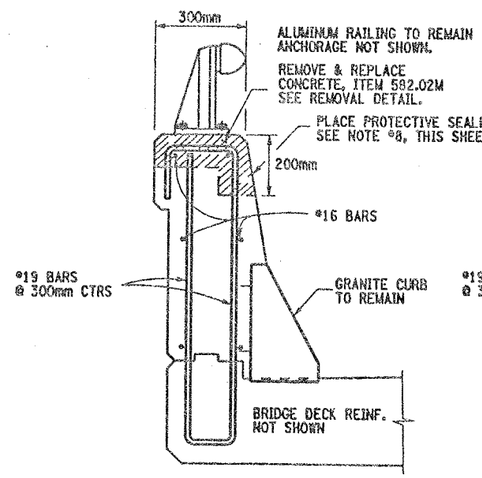

(III) REPAIR DETAILS
FULL TOP & 200mm FACE

NOT TO SCALE

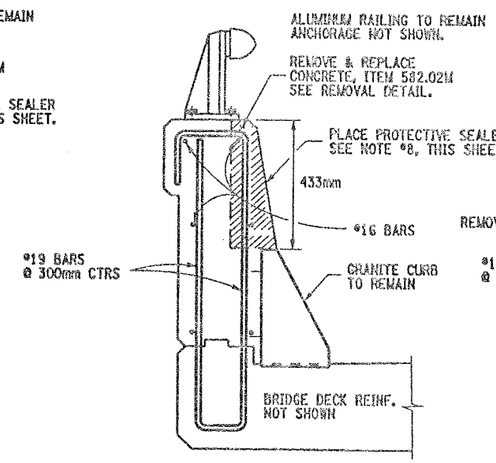

(IV) REPAIR DETAILS
FRONT FACE

NOT TO SCALE

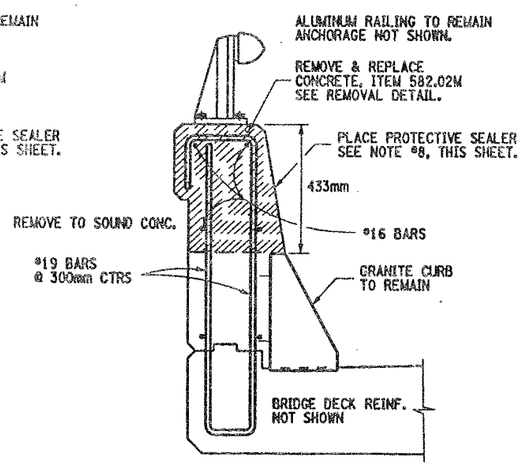

(V) REPAIR DETAILS
FULL SECTION

NOT TO SCALE

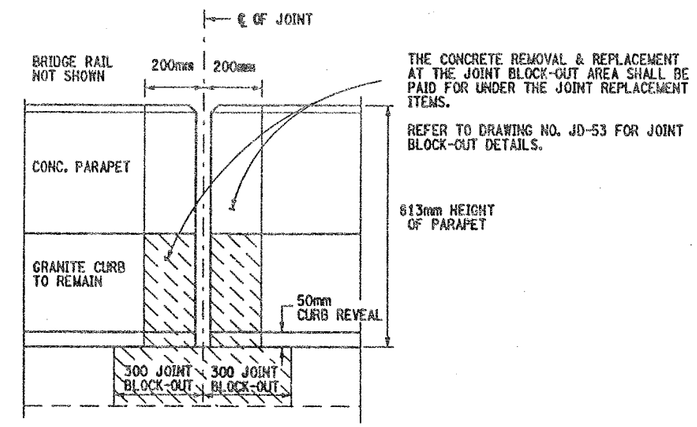

THE CONCRETE REMOVAL & REPLACEMENT AT THE JOINT BLOCK-OUT AREA SHALL BE PAID FOR UNDER THE JOINT REPLACEMENT ITEMS.

REFER TO DRAWING NO. JD-53 FOR JOINT BLOCK-OUT DETAILS.

FRONT FACE PARAPET CONCRETE DETAIL
SHOWS TYPICAL CONC. REMOVAL AT JOINT

NOT TO SCALE

ASBESTOS MATERIAL REMOVAL NOTES:

THE REMOVAL OF ALL ASBESTOS CONTAINING CAULK (ITEM 210.5433M) SHALL BE COMPLETED PRIOR TO COMMENCEMENT OF ANY PARAPET REPAIR WORK.

THIS REMOVAL OF THE ASBESTOS CAULK SHALL BE PERFORMED AT EACH BRIDGE RAIL BASE PLATE ON BOTH N.B. & S.B. BRIDGES. (REMOVE ASBESTOS CALKING AT ALL RAIL BASE PLATES BOTH BRIDGES)

AFTER COMPLETION OF THE PARAPET REPAIRS INSTALL A CAULKING COMPOUND AROUND THE BASE PLATES OF THE RAILING WHICH MEETS MATERIAL SPECIF. 705-06 AND IS ACCEPTABLE TO THE ENGINEER. PAID UNDER ITEM 210.5433M.

REFER TO ORIGINAL CONTRACT PLANS F.I.S.H. 70-7 FOR RAIL LAY-OUT DETAILS.

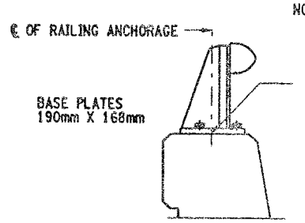

REMOVE EXISTING GRAY ASBESTOS CAULKING COMPOUND AT THE ALUMINUM RAILING BASE PLATES. IT IS ASSUMED THAT THE CAULK COMPOUND IS SURROUNDING (PERIMETER) THE RAILING BASE PLATES. THIS PERIMETER REMOVAL OPERATION SHALL BE PERFORM AT EACH RAILING BASE PLATE ON BOTH STRUCTURES.

HOWEVER, SOME CAULK MATERIAL MAY BE FOUND UNDER THE RAILING BASE PLATES. THIS CAULKING COMPOUND UNDER THE BASE PLATES SHALL BE REMOVED ONLY AT LOCATIONS WHERE THE PARAPET CONCRETE REPAIRS WILL DISTURB THE MATERIAL (REMOVAL AS ENCOUNTERED).

ALL COSTS TO BE PAID UNDER ITEM 210.5433M. SEE ASBESTOS MATERIAL REMOVAL NOTES, THIS SHEET.

TYPICAL BRIDGE RAIL DETAIL

NOT TO SCALE

ITEMS USED:

ITEM 582.05M	- REMOVAL OF STRUCTURAL CONCRETE REPLACE WITH CLASS "A" CONCRETE (CM)
ITEM 210.5433M	- REMOVAL & DISPOSAL OF ASBESTOS CONTAINING CAULK (BV 12) (L.S)
ITEM 18559.1696M	- PROTECTIVE SEALING OF STRUCTURAL CONCRETE (SM)

ALL DIMENSIONS ARE IN mm UNLESS OTHERWISE NOTED

AS BUILT REVISIONS

SIGNATURE DATE

INTERSTATE 481 OVER CSX RR YARD

PARAPET REPAIR DETAILS

STATE OF NEW YORK
DEPARTMENT OF TRANSPORTATION

FILENAME	REGION	DATE	DRAWING NO.
305613AB.R1A	3	10/02	PW17-1

ESTIMATED BY ____ CHECKED BY ____
DRAFTED BY ____ CHECKED BY ____
DESIGNED BY ____
JOB MANAGER ____
DESIGN SUPERVISOR ____

FED ROAD REG. NO.	STATE	CONTRACT NO.	SHEET NO.	TOTAL SHEETS
1	N.Y.	D259214	331	432

BRIDGE REHABILITATION PROJECT (ELEMENT SPECIFIC)
VARIOUS BRIDGES ON INTERSTATE 481
TOWNS OF DEWITT AND CICERO
ONONDAGA COUNTY
P.I.N. 305613 B.I.N. 1093571 & 1093572

PARAPET REPAIR TABLE (ITEM 582.05M)

BIN 1093571	STATION TO STATION	RIGHT SIDE (EAST)	LEFT SIDE (WEST)	REMARKS
SPAN 1	6+626.288 TO 6+627.588	1.300m		(I) REPAIR PROCEDURE
	6+653.795 TO 6+654.495	.700m		(V) REPLACE FULL SECTION
	6+653.595 TO 6+654.495		.900m	(V) REPLACE FULL SECTION
SPAN 2	6+654.895 TO 6+655.505	.600m		(V) REPLACE FULL SECTION
	6+654.895 TO 6+655.505		.600m	(V) REPLACE FULL SECTION
	6+654.895 TO 6+664.895	10.000m		(I) REPAIR PROCEDURE
	6+669.995 TO 6+673.695	3.700m		(I) REPAIR PROCEDURE
SPAN 3	6+731.266 TO 6+735.466	4.200m		(I) REPAIR PROCEDURE
	6+753.266 TO 6+754.266	1.000m		(V) REPLACE FULL SECTION
	6+753.266 TO 6+754.266		1.000m	(V) REPLACE FULL SECTION
SPAN 4	6+754.666 TO 6+755.666	1.000m		(V) REPLACE FULL SECTION
	6+760.466 TO 6+769.866		9.400m	(I) REPAIR PROCEDURE
	6+760.666 TO 6+778.966	18.300m		(I) REPAIR PROCEDURE*
	6+790.116 TO 6+791.616		1.500m	(I) REPAIR PROCEDURE (BACKFACE)
	6+789.316 TO 6+801.316	12.000m		(I) REPAIR PROCEDURE
	6+794.116 TO 6+803.616		9.500m	(III) REPAIR PROCEDURE
	6+813.616 TO 6+814.616	1.000m		(V) REPLACE FULL SECTION
	6+813.616 TO 6+814.616		1.000m	(IV) REPAIR PROCEDURE
SPAN 5	6+815.016 TO 6+816.016	1.000m		(V) REPLACE FULL SECTION
	6+823.166 TO 6+871.166	48.000m		(I) REPAIR PROCEDURE
	6+870.966 TO 6+874.966	4.000m		(V) REPLACE FULL SECTION
SPAN 6	6+875.366 TO 6+876.366	1.000m		(V) REPLACE FULL SECTION
	6+875.366 TO 6+895.366		20.000m	(IV) REPAIR PROCEDURE
	6+875.317 TO 6+935.317	60.000m		(III) REPAIR PROCEDURE
	6+908.317 TO 6+914.317		6.000m	(IV) REPAIR PROCEDURE
	6+920.517 TO 6+928.517		8.000m	(IV) REPAIR PROCEDURE
	6+923.317 TO 6+935.317		12.000m	(IV) REPAIR PROCEDURE
SPAN 7	6+935.717 TO 6+947.217	11.500m		(IV) REPAIR PROCEDURE
	6+949.917 TO 6+951.417	1.500m		(I) REPAIR PROCEDURE
	6+952.112 TO 6+967.112		15.000m	(IV) REPAIR PROCEDURE
	6+967.012 TO 6+969.612	2.600m		(IV) REPAIR PROCEDURE
SPAN 8	6+973.512 TO 7+010.907	37.400m		(I) REPAIR PROCEDURE
	6+981.907 TO 6+990.407		8.500m	(IV) REPAIR PROCEDURE
	6+996.907 TO 7+010.907		14.000m	(IV) REPAIR PROCEDURE
SPAN 9	7+011.307 TO 7+048.702		37.400m	(II) REPAIR PROCEDURE
SPAN 10	7+070.325 TO 7+074.325		4.000m	(IV) REPAIR PROCEDURE
SPAN 11	7+091.825 TO 7+098.825	7.000m		(I) REPAIR PROCEDURE
	7+102.525 TO 7+106.025	3.500m		(I) REPAIR PROCEDURE
	7+100.325 TO 7+108.325		8.000m	(I) REPAIR PROCEDURE
	7+109.325 TO 7+110.825	1.500m		(I) REPAIR PROCEDURE
	7+112.725 TO 7+128.725		16.000m	(I) REPAIR PROCEDURE
	7+114.825 TO 7+117.825	3.000m		(I) REPAIR PROCEDURE
SPAN 12	7+129.125 TO 7+166.825		37.700m	(II) REPAIR PROCEDURE
	7+131.925 TO 7+137.925	6.000m		(III) REPAIR PROCEDURE
	7+158.025 TO 7+159.525	1.500m		(III) REPAIR PROCEDURE
SPAN 13	7+167.225 TO 7+204.925	37.700m		(I) REPAIR PROCEDURE
	7+172.225 TO 7+184.225		12.000m	(I) REPAIR PROCEDURE
	7+189.925 TO 7+204.925		15.000m	(I) REPAIR PROCEDURE
SPAN 14	7+205.325 TO 7+243.025	37.700m		(I) REPAIR PROCEDURE
	7+205.325 TO 7+243.025		37.700m	(II) REPAIR PROCEDURE
SPAN 15	7+243.425 TO 7+281.530		38.100m	(II) REPAIR PROCEDURE
	7+248.530 TO 7+254.330	5.800m		(III) REPAIR PROCEDURE
	7+257.430 TO 7+262.030	4.600m		(I) REPAIR PROCEDURE
	7+265.030 TO 7+266.530	1.500m		(I) REPAIR PROCEDURE
	7+268.230 TO 7+271.730	3.500m		(I) REPAIR PROCEDURE

* FULL SECTION REPLACEMENT AS DIRECTED BY ENGINEER TO INCLUDE IF NECESSITY, REPLACEMENT OR REPAIR OF THE GRANITE CURB. ALL COST TO BE INCLUDED IN BID PRICE FOR ITEM 582.05M.

(BACKFACE) INDICATES REPAIR AREA IS ON THE OUTSIDE OR BACKFACE OF PARAPET. CAUTION MUST BE TAKEN WHEN WORKING OVER R.R. TRACKS.

PARAPET REPAIR TABLE (ITEM 582.05M)

BIN 1093572	STATION TO STATION	RIGHT SIDE (EAST)	LEFT SIDE (WEST)	REMARKS
SPAN 1	6+578.084 TO 6+582.084	4.000m		(I) REPAIR PROCEDURE
	6+592.589 TO 6+594.789	2.200m		(I) REPAIR PROCEDURE
	6+593.884 TO 6+600.884		7.000m	(I) REPAIR PROCEDURE (BACKFACE)
	6+597.489 TO 6+599.489	2.000m		(I) REPAIR PROCEDURE
	6+600.581 TO 6+608.297	7.700m		(I) REPAIR PROCEDURE
	6+602.697 TO 6+608.297		5.600m	(I) REPAIR PROCEDURE (BACKFACE)
SPAN 2	6+608.697 TO 6+620.197		11.500m	(I) REPAIR PROCEDURE (BACKFACE)
	6+639.497 TO 6+641.497		2.000m	(I) REPAIR PROCEDURE (BACKFACE)
	6+646.997 TO 6+653.497		6.500m	(I) REPAIR PROCEDURE (BACKFACE)
SPAN 3	6+662.597 TO 6+664.597		2.000m	(II) REPAIR PROCEDURE
	6+676.097 TO 6+684.097	8.000m		(I) REPAIR PROCEDURE
	6+697.097 TO 6+698.097	1.000m		(I) REPAIR PROCEDURE
	6+707.070 TO 6+708.070	1.000m		(V) REPLACE FULL SECTION *
	6+707.070 TO 6+708.070		1.000m	(V) REPLACE FULL SECTION *
SPAN 4	6+708.470 TO 6+709.470	1.000m		(V) REPLACE FULL SECTION
	6+715.570 TO 6+757.070	41.500m		(I) REPAIR PROCEDURE
	6+719.070 TO 6+728.070		9.000m	(I) REPAIR PROCEDURE
	6+750.420 TO 6+768.420		18.000m	(III) REPAIR PROCEDURE
	6+767.420 TO 6+768.420		1.000m	(V) REPLACE FULL SECTION
SPAN 5	6+768.820 TO 6+770.320	1.500m		(V) REPLACE FULL SECTION
	6+773.120 TO 6+786.120	13.000m		(I) REPAIR PROCEDURE
	6+778.920 TO 6+783.220		4.300m	(I) REPAIR PROCEDURE
	6+799.620 TO 6+802.120		2.500m	(I) REPAIR PROCEDURE
	6+804.620 TO 6+815.620	11.000m		(I) REPAIR PROCEDURE
	6+826.771 TO 6+828.771		2.000m	(V) REPLACE FULL SECTION
SPAN 6	6+829.171 TO 6+830.171	1.000m		(V) REPLACE FULL SECTION
	6+829.171 TO 6+830.171		1.000m	(V) REPLACE FULL SECTION
	6+830.171 TO 6+888.771		58.600m	(II) REPAIR PROCEDURE
	6+846.971 TO 6+849.971	3.000m		(I) REPAIR PROCEDURE
	6+855.621 TO 6+889.121	33.500m		(I) REPAIR PROCEDURE
SPAN 7	6+889.126 TO 6+926.916	37.400m		(I) REPAIR PROCEDURE
	6+892.221 TO 6+897.521		5.300m	(I) REPAIR PROCEDURE
	6+903.321 TO 6+907.621		4.300m	(I) REPAIR PROCEDURE
	6+909.721 TO 6+911.721		2.000m	(I) REPAIR PROCEDURE
	6+916.916 TO 6+926.916		10.000m	(III) REPAIR PROCEDURE
SPAN 8	6+927.316 TO 6+964.712	37.400m		(IV) REPAIR PROCEDURE
SPAN 9	6+965.112 TO 6+996.112	31.000m		(I) REPAIR PROCEDURE
SPAN 10	7+014.602 TO 7+023.602		9.000m	(II) REPAIR PROCEDURE
	7+020.302 TO 7+040.302	20.000m		(II) REPAIR PROCEDURE
SPAN 11	7+044.302 TO 7+046.302		2.000m	(I) REPAIR PROCEDURE
	7+060.397 TO 7+067.697	7.300m		(I) REPAIR PROCEDURE
SPAN 12	7+099.892 TO 7+101.892	2.000m		(I) REPAIR PROCEDURE
SPAN 13	7+119.492 TO 7+125.492		6.000m	(I) REPAIR PROCEDURE
	7+168.283 TO 7+186.283		18.000m	(I) REPAIR PROCEDURE
	7+168.983 TO 7+191.483	22.500m		(I) REPAIR PROCEDURE
SPAN 14	7+171.093 TO 7+191.483	20.400m		(I) REPAIR PROCEDURE
	7+165.783 TO 7+179.283		13.500m	(I) REPAIR PROCEDURE
SPAN 15	7+197.883 TO 7+199.883		2.000m	(I) REPAIR PROCEDURE
	7+198.283 TO 7+229.683	31.400m		(I) REPAIR PROCEDURE

GENERAL NOTES:

WORK ADJACENT TO JOINT BLOCK-OUT (200mm) SHALL BE INCLUDED IN THE BRIDGE JOINT REPLACEMENT ITEMS. SEE DRAWING NO. JD-53 FOR JOINT BLOCK-OUT REMOVAL DETAILS.

SOME REPAIRS ARE ON THE BACK FACE OF THE PARAPETS SOME OF THIS WORK MAY BE OVER THE RAIL ROAD TRACKS.

REFER TO DRAWING NO. PW17-1 FOR CONCRETE REMOVAL DETAILS AND NOTES.

STATIONING AND DIMENSIONS SHOWN FOR CONCRETE REMOVAL ARE APPROXIMATE AND SHALL BE FIELD VERIFIED BY CONTRACTOR AND ENGINEER.

REFER TO RECONSTRUCTION NOTES ON DRAWING NO. GN-1.

ALL DIMENSIONS ARE IN m UNLESS OTHERWISE NOTED

AS BUILT REVISIONS

SIGNATURE DATE

INTERSTATE 481
OVER
CSX RAILROAD YARD

TABLE OF PARAPET REPAIRS

STATE OF NEW YORK
DEPARTMENT OF TRANSPORTATION

FILENAME	REGION	DATE	DRAWING NO.
305613AB.R1A	3	10/02	PW17-2

ESTIMATED BY ____ DRAFTED BY ____ CHECKED BY ____
DESIGNED BY ____ CHECKED BY ____
JOB MANAGER ____
DESIGN SUPERVISOR ____

FED ROAD REG. NO.	STATE	CONTRACT NO.	SHEET NO.	TOTAL SHEETS
1	N.Y.	D259214	332	432

BRIDGE REHABILITATION PROJECT (ELEMENT SPECIFIC)
VARIOUS BRIDGES ON INTERSTATE 481
TOWNS OF DEWITT AND CICERO
ONONDAGA COUNTY
P.I.N. 305613 B.I.N. 1093572

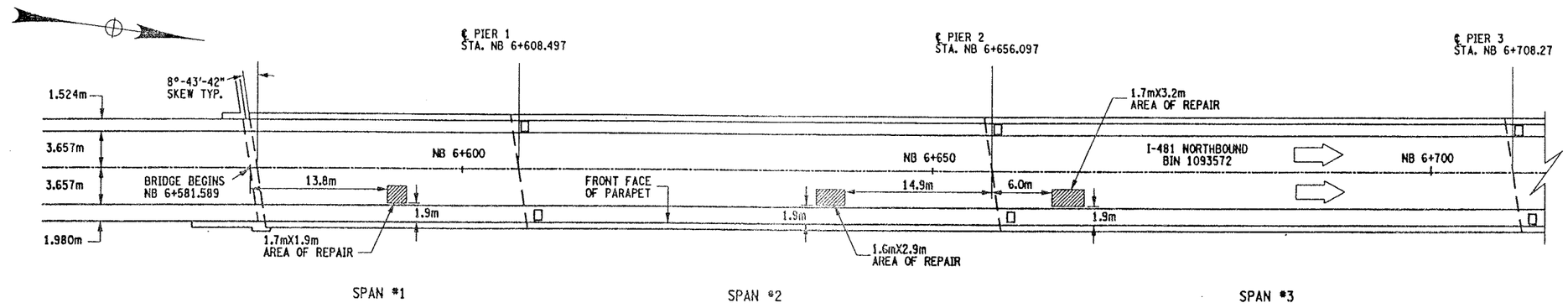

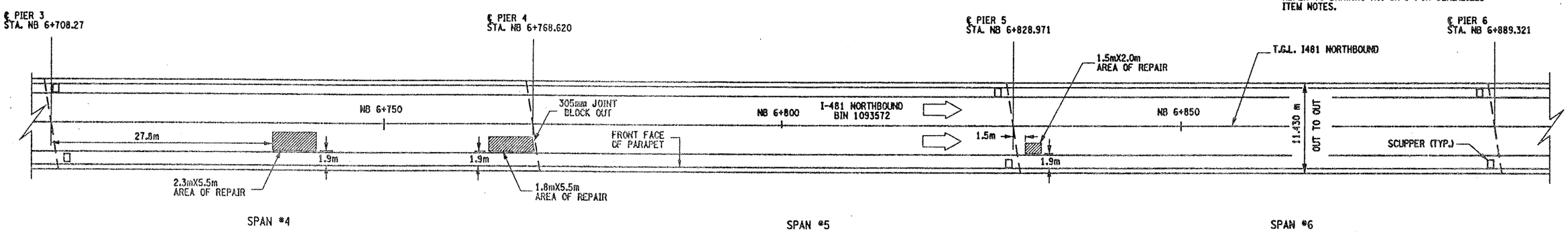

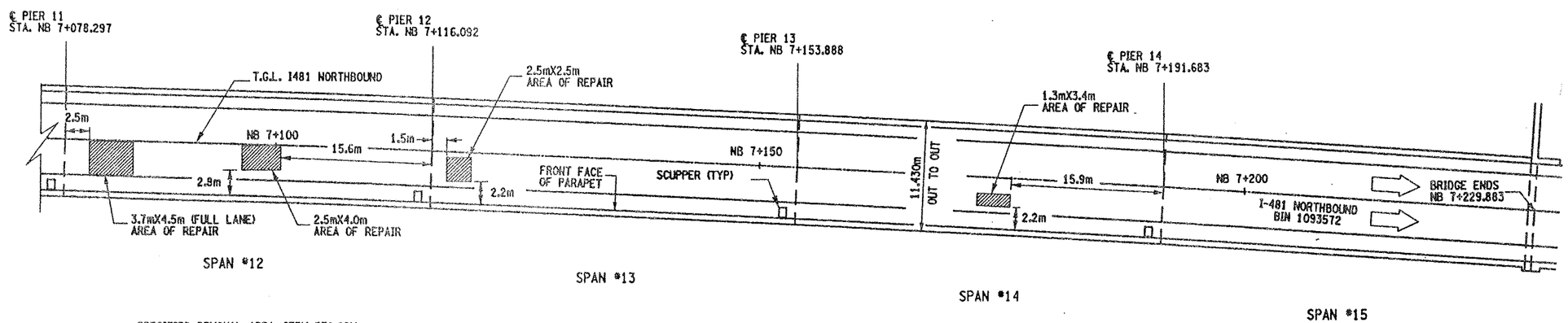

PLAN VIEW OF SPOT DECK REPAIRS

NOT TO SCALE

ALL DIMENSIONS ARE IN m UNLESS OTHERWISE NOTED

GENERAL NOTES:

THIS WORK ONLY PERTAINS TO BIN 1093572 NB.

THE AREAS SHOWN ARE THE RESULTS OF FIELD INVESTIGATIONS AND ARE ONLY APPROXIMATE. THE ACTUAL LIMITS SHALL BE AS DIRECTED BY ENGINEER.

NO FULL DEPTH SLAB REPAIRS ARE EXPECTED AT THESE LOCATIONS.

REFER TO DRAWING NO. GN-1 FOR SERIALIZED ITEM NOTES.

REMOVAL NOTES:

ORIGINAL BRIDGE DECK 203mm MONOLITHIC SLAB. A 38mm CONC. OVERLAY HAS BEEN ADDED.

THESE LOCATIONS ARE CURRENTLY FILLED WITH ASPHALT (BLACKTOP). DEPTH OF ASPHALT IS UNKNOWN, ESTIMATED AT @ 38mm. THE REMOVAL OF THE ASPHALT AND CONCRETE TO LIMITS SHOWN TO BE PAID UNDER ITEM 579.02M.

REMOVE CONCRETE TO LIMITS SHOWN AND TO SOUND CONCRETE, AS ORDER BY ENGINEER.

ALL AREAS THAT ARE REPAIRED SHALL ALSO RECEIVE ITEM 558.01 - TRANSVERSE SAWCUT GROOVING AND ITEM 18559.1896M - PROTECTIVE SEALING.

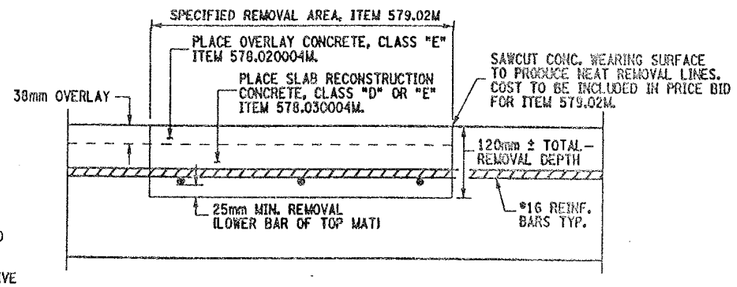

CROSS SECTION VIEW THROUGH REPAIR LOCATION

NOT TO SCALE

ITEMS USED:

ITEM 558.01M - TRANSVERSE SAWCUT GROOVING (SM)
ITEM 18559.1896M - PROTECTIVE SEALING FOR STRUCT. CONC. (SM)
ITEM 578.020004M - OVERLAY CONCRETE, CLASS "E" (SM)
ITEM 578.030004M - SLAB RECONSTRUCTION CONCRETE, CLASS "D" OR "E" (SM)
ITEM 579.02M - REINFORCING BAR EXPOSURE (SM)

AS BUILT REVISIONS

SIGNATURE DATE

INTERSTATE 481
OVER
CSX RAILROAD YARD
BRIDGE DECK REPAIRS

STATE OF NEW YORK
DEPARTMENT OF TRANSPORTATION

FILENAME	REGION	DATE	DRAWING NO.
305613AB.R1A	3	10/02	DR17-1

DESIGN SUPERVISOR ____ JOB MANAGER ____ DESIGNED BY ____ CHECKED BY ____ ESTIMATED BY ____ DRAFTED BY ____ CHECKED BY ____

10935 71

FED ROAD REG. NO.	STATE	CONTRACT NO.	SHEET NO.	TOTAL SHEETS
1	N.Y.	D259214	341	432

BRIDGE REHABILITATION PROJECT (ELEMENT SPECIFIC)

VARIOUS BRIDGES ON INTERSTATE 481

TOWNS OF DEWITT AND CICERO

ONONDAGA COUNTY

P.I.N. 305613 | B.I.N. VARIOUS

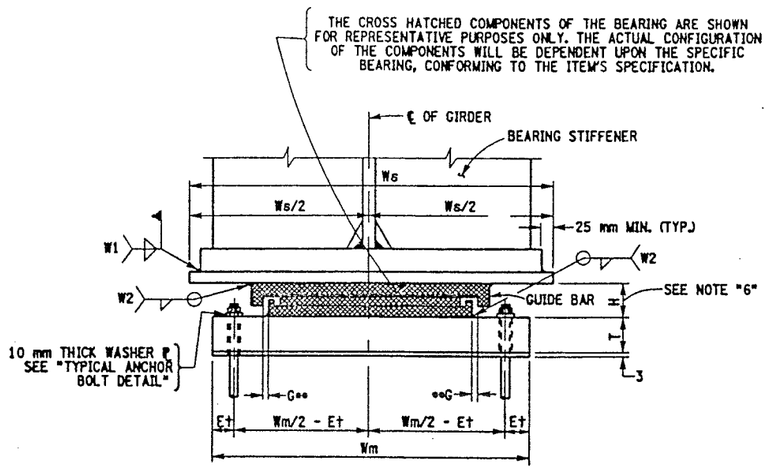

FRONT VIEW WITH ANCHOR BOLTS UNDER SOLE PLATE

NOT TO SCALE

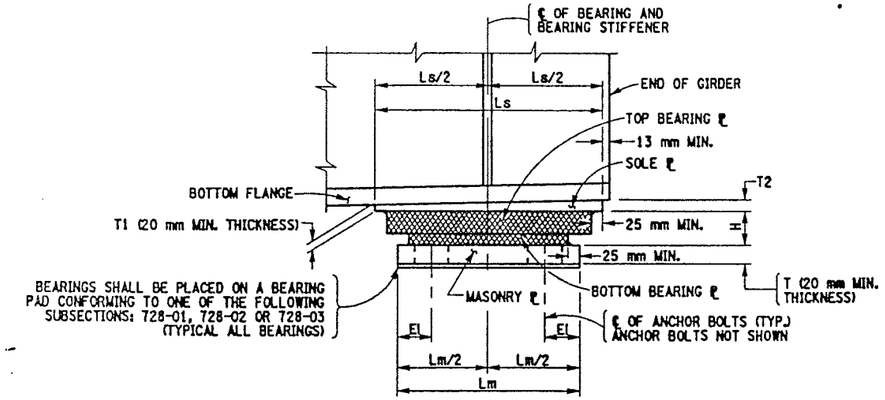

SIDE VIEW AT END OF GIRDER

NOT TO SCALE

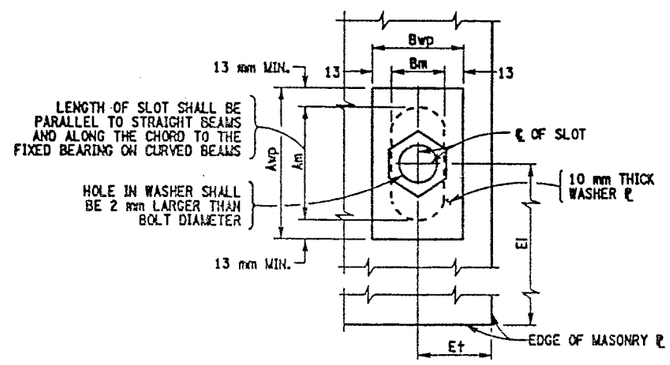

TYPICAL ANCHOR BOLT DETAIL

NOT TO SCALE

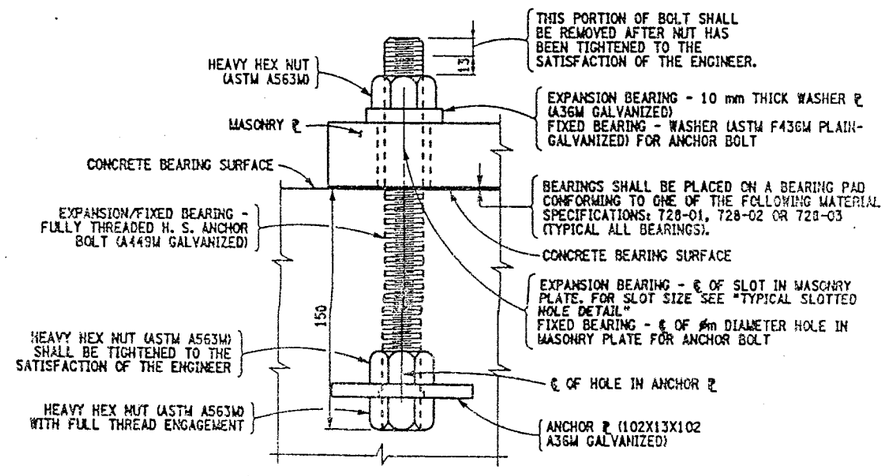

OPTIONAL ANCHOR BOLT DETAIL WITH ANCHOR PLATE ON NEW PEDESTALS

NOT TO SCALE

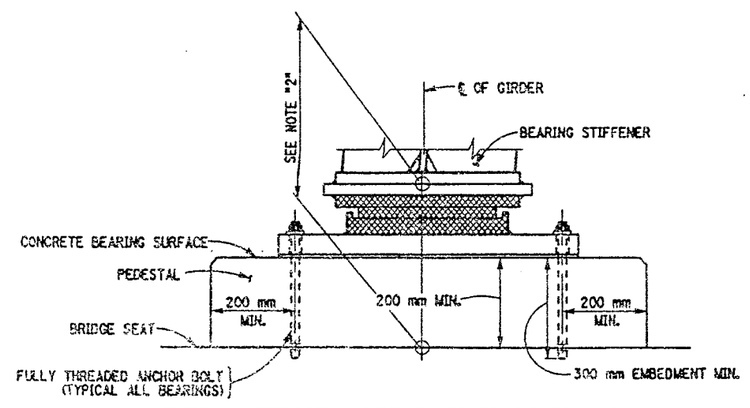

TYPICAL PEDESTAL DETAIL FIXED BEARING SHOWN - EXPANSION BEARING SIMILAR

NOT TO SCALE

NOTES:

THE CONTRACTOR SHALL SUPPLY MULTI-ROTATIONAL STRUCTURAL BRIDGE BEARINGS CONFORMING TO THE REQUIREMENTS OF STANDARD SPECIFICATION SECTION 565 AND SUBJECT TO THE FOLLOWING CONDITIONS:

1. THE BEARING DEVICES SUPPLIED SHALL BE CAPABLE OF TRANSMITTING THE LOADS AND MOVEMENT SHOWN ON THESE PLANS.
2. THE DIMENSION "H" IN THE BEARING TABLE REPRESENTS THE ASSUMED TOTAL HEIGHT OF BEARING MECHANISM BETWEEN THE SOLE PLATE AND MASONRY PLATE USED BY THE DESIGNER TO ESTABLISH THE PEDESTAL ELEVATIONS. THE MINIMUM PEDESTAL HEIGHT SHALL NOT BE CHANGED WITHOUT WRITTEN APPROVAL OF THE DEPUTY CHIEF ENGINEER (STRUCTURES).
3. MASONRY PLATES ARE TO BE DESIGNED. THE MINIMUM CONCRETE EDGE DISTANCE SHALL BE 75 mm AND THE MINIMUM ANCHOR BOLT COVER SHALL BE 200 mm.
4. THE BEARING DEVICE, MASONRY PLATE, SOLE PLATE, ANCHOR BOLTS, NUTS, WASHER PLATES AND BEARING PAD SHALL BE INCLUDED IN THE UNIT PRICE BID FOR THE BEARING ITEMS.
5. ALL EXPANSION BEARINGS SHALL HAVE A MAXIMUM FRICTION COEFFICIENT OF 3%.
6. IF THE ANCHOR BOLTS ARE SET UNDER THE SOLE PLATE, A MINIMUM CLEARANCE EQUAL TO TWO TIMES THE THICKNESS OF ANCHOR NUT PLUS 25 mm SHALL BE MAINTAINED BETWEEN THE TOP OF MASONRY PLATE AND BOTTOM OF THE SOLE PLATE.
7. ALL STEEL SHALL CONFORM TO ASTM A588M.
8. ALL METAL COMPONENTS OF THE BEARING SYSTEM WHICH ARE LIABLE TO COME INTO CONTACT DURING THE TRANSLATION SHALL HAVE A TEFLON SLIDING SURFACE FINISH.
9. ALL STEEL FABRICATION SHALL CONFORM TO THE PROVISIONS OF THE LATEST EDITION OF THE NEW YORK STATE STEEL CONSTRUCTION MANUAL.

WHENEVER JACKING OF THE SUPERSTRUCTURE IS NEEDED TO RESET THE BEARINGS, THE CONTRACTOR SHALL SUBMIT A JACKING SEQUENCE TO THE E.I.C. FOR APPROVAL.

LIST OF ITEMS USED:

ITEM 565.1522M - TYPE M.R. EXPANSION BEARING (1001 TO 2000KN) (EA)
ITEM 565.1722M - TYPE M.R. FIXED BEARING (1001 TO 2000KN) (EA)

*ONE WAY LONGITUDINAL MOVEMENT IS THE MAXIMUM ONE WAY MOVEMENT (EXPANSION OR CONTRACTION) OF THE SUPERSTRUCTURE WHEN BEARINGS ARE SET @ 20°C PLUS 25 MILLIMETERS OF TOLERANCE.

**ON WIDE STRUCTURES AND ON CURVED STRUCTURES PROVISIONS SHALL BE MADE FOR LIMITED LATERAL MOVEMENT.

ALL DIMENSIONS ARE IN mm UNLESS OTHERWISE NOTED

AS BUILT REVISIONS

SIGNATURE | DATE

MULTI ROTATIONAL BEARINGS

STATE OF NEW YORK
DEPARTMENT OF TRANSPORTATION

FILENAME	REGION	DATE	DRAWING NO.
305613AE.M1A	3	10/02	BR-1

DESIGN SUPERVISOR ____ JOB MANAGER ____ DESIGNED BY ____ ESTIMATED BY ____ DRAFTED BY ____ CHECKED BY ____ CHECKED BY ____

FED ROAD REG. NO.	STATE	CONTRACT NO.	SHEET NO.	TOTAL SHEETS
1	N.Y.	D259214	342	432

BRIDGE REHABILITATION PROJECT (ELEMENT SPECIFIC)

VARIOUS BRIDGES ON INTERSTATE 481

TOWNS OF DEWITT AND CICERO

ONONDAGA COUNTY

P.I.N. 305613 B.I.N. VARIOUS

BEARING TABLE

BIN	LOCATION	FIX./ EXP.	ITEM NO.	QUAN. REQ'D.	CAPACITY (KN) VERT.	CAPACITY (KN) HORZ.	*ONE WAY LONGIT. MOVEMENT	**(G) GUIDE CLEARANCE	MASONRY ℄ Lm	Wm	T	Et	El	Am	Bm	WASHER ℄ Awp	Bwp	SOLE ℄ Ls	Ws	T1	T2	BRG. H	ANCHOR BOLTS ø	BOLTS/BRG.	WELD SIZE W1	W2
1093571	PIER 4 @ 5 & 8 - PIER 5 @ 13 & 16	EXP.	565.1522M	4	1 556.8	295.79	63 mm		445	770	35	80	110	78	48	104	74	545	815	30	30	162	38	4	8	8
1093571	PIER 4 @ 6 & 7 - PIER 5 @ 14 & 15	EXP.	565.1522M	4	1 556.8	295.79	63 mm		445	770	35	80	110	78	48	104	74	545	660	30	30	162	38	4	8	8
1093571	PIER 4 @ 1 & 4 - PIER 5 @ 9 & 12	FIX.	565.1722M	4	1 556.8	295.79	-		445	665	62	80	110	-	-	-	-	395	815	60	60	104	38	4	8	8
1093571	PIER 4 @ 2, 3 - PIER 5 @ 10 & 11	FIX.	565.1722M	4	1 556.8	295.79	-		445	665	62	80	110	-	-	-	-	395	660	60	60	104	38	4	8	8
1002131	PIER 1 @ 1 & 8	FIX.	565.1722M	2	333.6	63.38	-		260	530	65	50	84	-	-	-	-	240	360	45	45	76	25	4	8	8
1002131	PIER 1 @ 2 - 7	FIX.	565.1722M	6	333.6	63.38	-		260	530	40	50	84	-	-	-	-	240	360	20	20	76	25	4	8	8
1002131	PIER 1 @ 9 - 16	EXP.	565.1522M	8	444.8	84.51	42 mm		260	530	40	50	84	65	35	91	61	360	360	20	20	115	25	4	8	8
1002131	PIER 2 @ 17 & 24	FIX.	565.1722M	2	444.8	84.51	-		280	530	51	50	84	-	-	-	-	260	360	20	20	84	25	4	8	8
1002131	PIER 2 @ 18 - 23	FIX.	565.1722M	6	444.8	84.51	-		280	530	40	50	84	-	-	-	-	260	360	20	20	84	25	4	8	8
1002131	PIER 2 @ 25 - 32	EXP.	565.1522M	8	333.6	63.38	33 mm		280	530	40	50	84	65	35	91	61	340	360	20	20	107	25	4	8	8
1002132	PIER 1 @ 1 & 6	FIX.	565.1722M	2	333.6	63.38	-		250	560	64	50	84	-	-	-	-	250	360	44	44	76	25	4	8	8
1002132	PIER 1 @ 2 - 5	FIX.	565.1722M	4	333.6	63.38	-		250	560	40	50	84	-	-	-	-	250	360	20	20	76	25	4	8	8
1002132	PIER 1 @ 7 - 12	EXP.	565.1522M	6	667.2	126.77	42 mm		304	670	40	50	84	65	35	91	61	400	500	20	20	123	25	4	8	8
1002132	PIER 2 @ 13 - 18	FIX.	565.1722M	6	667.2	126.77	-		304	670	40	50	84	-	-	-	-	300	500	20	20	86	25	4	8	8
1002132	PIER 2 @ 19 & 24	EXP.	565.1522M	2	333.6	63.38	33 mm		270	560	50	50	84	65	35	91	61	350	360	30	30	107	25	4	8	8
1002132	PIER 2 @ 20 - 23	EXP.	565.1522M	4	333.6	63.38	33 mm		270	560	40	50	84	65	35	91	61	350	360	20	20	107	25	4	8	8

T2 IS UPSTATION OF T1.

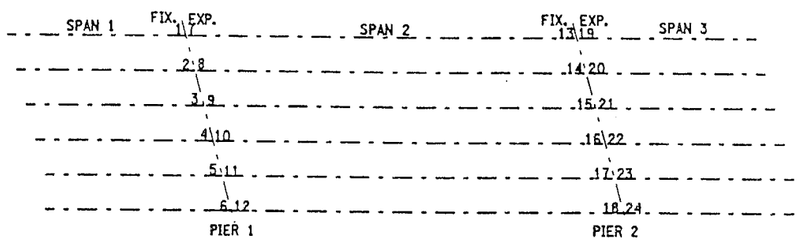

BEARING LOCATION SCHEMATIC

BIN 1002132

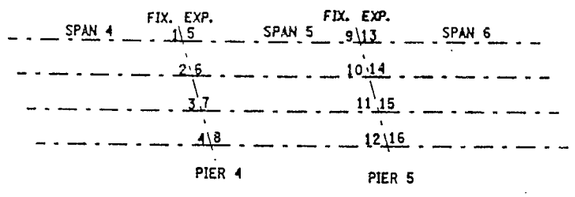

BEARING LOCATION SCHEMATIC

BIN 1093571

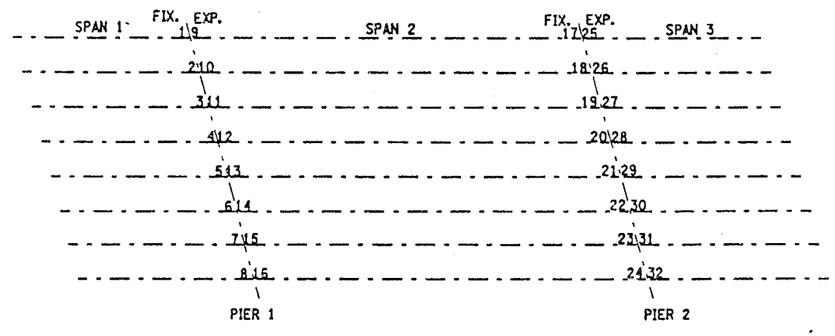

BEARING LOCATION SCHEMATIC

BIN 1002131

ALL DIMENSIONS ARE IN m UNLESS OTHERWISE NOTED

AS BUILT REVISIONS

SIGNATURE DATE

MULTI ROTATIONAL BEARINGS

STATE OF NEW YORK
DEPARTMENT OF TRANSPORTATION

FILENAME	REGION	DATE	DRAWING NO.
305613AE.M1A	3	10/02	BR-2

DESIGN SUPERVISOR ____ JOB MANAGER ____ DESIGNED BY ____ ESTIMATED BY ____ DRAFTED BY ____ CHECKED BY ____ CHECKED BY ____

1093572

FED ROAD REG. NO.	STATE	CONTRACT NO.	SHEET NO.	TOTAL SHEETS
1	N.Y.	D259214	350	432

BRIDGE REHABILITATION PROJECT (ELEMENT SPECIFIC)
VARIOUS BRIDGES ON INTERSTATE 481
TOWNS OF DEWITT AND CICERO
ONONDAGA COUNTY
P.I.N. 305613 B.I.N. 1093571 & 1093572

PIER	SPAN-GIRDER	EXP. BRG. TYPE	SOLE ℄-DIM. "A"
SB-P1	2 - ALL	III	584
SB-P3	4 - 1&4	II	813
SB-P3	4 - 2&3	II	660
SB-P6	7 - 1&4	II	508
SB-P6	7 - 2&3	I	610
SB-P7	8 - 1&4	I	635
SB-P7	8 - 2&3	I	610
SB-P9	10 - ALL	I	660
SB-P10	11 - 1&4	I	635
SB-P10	11 - 2&3	I	610
SB-P11	12 - 1&4	I	635
SB-P11	12 - 2&3	I	610
SB-P13	14 - 1&4	I	635
SB-P13	14 - 2&3	I	610
NB-P1	1 - ALL	III	584
NB-P2	3 - 1&4	III	762
NB-P2	3 - 2&3	III	711
NB-P3	4 - 1&4	II	813
NB-P3	4 - 2&3	II	660
NB-P4	5 - 1&4	II	813
NB-P4	5 - 2&3	II	660
NB-P6	7 - 1&4	II	508
NB-P6	7 - 2&3	II	610
NB-P7	8 - 1&4	II	635
NB-P7	8 - 2&3	I	610
NB-P8	9 - 1&4	I	635
NB-P8	9 - 2&3	I	610
NB-P10	11 - 1&4	I	635
NB-P10	11 - 2&3	I	610
NB-P11	12 - 1&4	I	635
NB-P11	12 - 2&3	I	610

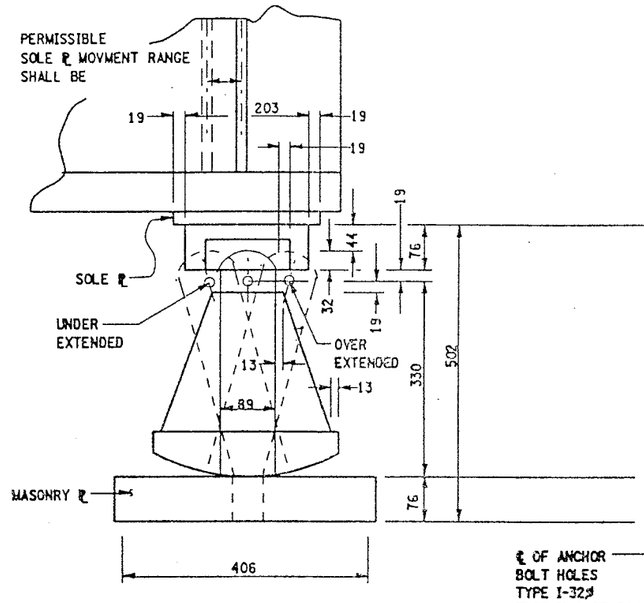

SIDE ELEVATION

NOT TO SCALE

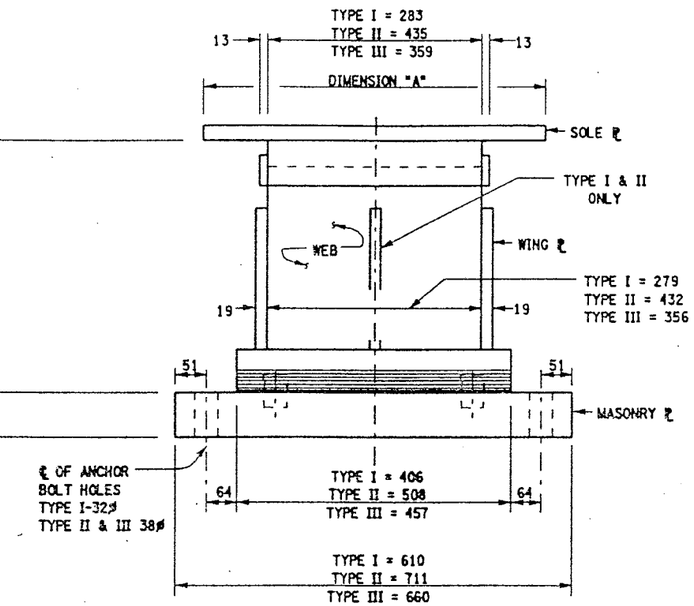

END ELEVATION

NOT TO SCALE

EXISTING HIGH ROCKER EXPANSION BEARING
BIN 1093571 & BIN 1093572

BRIDGE BEARING RESTORATION NOTES:

1. BRIDGE BEARING RESTORATION ITEM 15565.4302M SHALL INCLUDE ALL DESIGNATED WORK AS PER THE SPECIFICATION.
2. STRUCTURAL LIFTING SHALL BE USED WITH ALL EXPANSION BEARING RESTORATION.
3. IF THE CONTRACTOR ELECTS TO LIFT ONLY ONE GIRDER AT A TIME PER SPAN (TO A MAXIMUM OF 3 mm TO REMOVE LOAD FROM BEARINGS), NO VEHICULAR TRAFFIC RESTRICTIONS WILL BE REQUIRED AS STATED IN SPECIFICATIONS SECTON 585-STRUCTURAL LIFTING OPERATIONS.
4. BEARING RESTORATION SHALL AS A MINIMUM, AND IN ALL CASES INCLUDE REPLACEMENT OF BRONZE PLATE.
5. FIXED BEARING TO BE CLEANED IN PLACE. DO NOT DISASSEMBLE.
6. ON BINS 1093571 & 1093572, BRIDGE BEARING RESTORATION ITEM 15564.4302M FOR THE HIGH ROCKER BEARINGS SHALL INCLUDE ONLY THOSE BEARINGS SHOWN ON DWG BR-11 WHICH ARE EITHER OVER EXTENDED OR UNDER EXTENDED MORE THAN 5° FROM WHAT SHOULD BE ANTICIPATED FOR THE AMBIENT TEMPERATURE. THOSE EXPANSION BEARINGS WHICH ARE BEING RESTORED SHALL BE RESET TO ORIGINAL SPECIFICATIONS.

JACKING NOTES:

THE METHOD OF LIFTING SHALL BE APPROVED BY THE DEPUTY CHEIF ENGINEER (STRUCTURES), DSES, TWO WEEKS PRIOR TO THE START OF THE WORK.

NO LIFTING WILL BE ALLOWED UNTIL ALL TEMPORARY SUPPORTS ARE SECURED.

WHEN POSSIBLE, THERE WILL BE NO LIVE LOAD DURING LIFTING.

LIFTING SHALL BE CONFINED TO ONE END OF A SPAN AT ANY ONE TIME.

IF THE CONTRACTOR ELECTS TO LIFT ONLY ONE GIRDER AT A TIME PER PIER (TO A MAXIMUM OF 3 mm TO REMOVE LOAD FROM BEARING), NO VEHICULAR TRAFFIC RESTRICTIONS WILL BE REQUIRED AS STATED IN THE SPECIFICATION SECTION 585-STRUCTURAL LIFTING OPERATIONS.

ITEM CLARIFICATION NOTE:

ITEM 589.52NNNNM, REMOVAL OF EXISTING STEEL IS A SERIALIZED ITEM AND THE FOLLOWING PAY ITEMS SHALL BE INCORPORATED BY BRIDGE:
BIN 1093571 SB SHALL USE ITEM 589.520001M
BIN 1093572 NB SHALL USE ITEM 589.520002M

ITEM 571.01NNNNM - THE TREATMENT AND DISPOSAL OF PAINT REMOVAL WASTE IS A SERIALIZED ITEM AND THE FOLLOWING PAY ITEMS SHALL BE INCORPORATED BY BRIDGE:
BIN 1093571 SB SHALL USE ITEM 571.010001M
BIN 1093572 NB SHALL USE ITEM 571.010002M

ITEM 570.10NNNNM - ENVIRONMENTAL GROUND PROTECTION IS A SERIALIZED ITEM AND THE FOLLOWING PAY ITEMS SHALL BE INCORPORATED BY BRIDGE.
BIN 1093571 SB SHALL USE ITEM 570.090001M
BIN 1093572 NB SHALL USE ITEM 570.090002M

ITEM 570.09NNNNM - ENVIRONMENTAL WATER PROTECTION IS A SERIALIZED ITEM AND THE FOLLOWING PAY ITEMS SHALL BE INCORPORATED BY BRIDGE
BIN 1093571 SB SHALL USE ITEM 570.100001M
BIN 1093572 NB SHALL USE ITEM 570.100002M

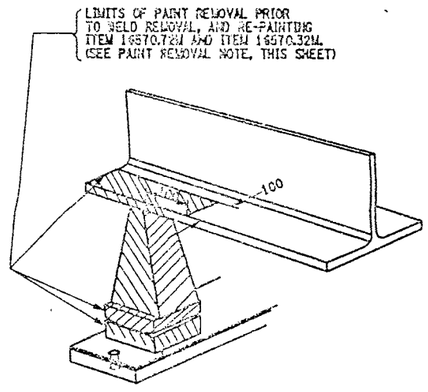

PAINT REMOVAL DETAIL

SCALE: 1 TO 5

PAINT REMOVAL NOTE:

1. IN CONJUNCTION WITH THE USE OF ITEM 16570.32M AND ITEM 16570.76M, ITEM 571.01NNNNM - TREATMENT & DISPOSAL OF PAINT REMOVAL WASTE AND EITHER ITEM 570.10NNNNM - ENVIRONMENTAL GROUND PROTECTION OR ITEM 570.09NNNNM - ENVIRONMENTAL WATER PROTECTION SHALL ALSO BE INCORPORATED DURING THE PAINT REMOVAL OPERATIONS.
2. ALL NEW PARTS INSTALLED AT THIS LOCATION SHALL BE INCLUDED IN THE UNIT PRICE BID FOR ITEM 15565.4302. THE CONTRACTOR WILL BE PAID FOR A QUANTITY OF ONE FOR ALL NEW MATERIALS AT THIS LOCATION.
3. ALL EXISTING SURFACES SHALL BE CLEANED AND LUBRICATED TO ENSURE FREE MOVEMENT, ITEM 15565.4302M.

LIST OF ITEMS USED:

ITEM 571.010001M - TREATMENT AND DISPOSAL OF PAINT REMOVAL WASTE (CM)
ITEM 571.010002M - TREATMENT AND DISPOSAL OF PAINT REMOVAL WASTE (CM)
ITEM 15565.4302M - BRIDGE BEARING RESTORATION (EA)

ALL DIMENSIONS ARE IN mm UNLESS OTHERWISE NOTED

AS BUILT REVISIONS

SIGNATURE DATE

INTERSTATE 481 SB & NB
OVER
CSX RAILROAD
BEARING RESTORATION DETAILS

STATE OF NEW YORK
DEPARTMENT OF TRANSPORTATION

FILENAME	REGION	DATE	DRAWING NO.
305613ZZJM1A	3	10/02	BR-10

DESIGN SUPERVISOR ____ JOB MANAGER ____ DESIGNED BY ____ CHECKED BY ____ ESTIMATED BY ____ DRAFTED BY ____ CHECKED BY ____

FED ROAD REG. NO.	STATE	CONTRACT NO.	SHEET NO.	TOTAL SHEETS
1	N.Y.	D259214	351	432

BRIDGE REHABILITATION PROJECT (ELEMENT SPECIFIC)
VARIOUS BRIDGES ON INTERSTATE 481
TOWNS OF DEWITT AND CICERO
ONONDAGA COUNTY
P.I.N. 305613 | B.I.N. 1093571 & 1093572

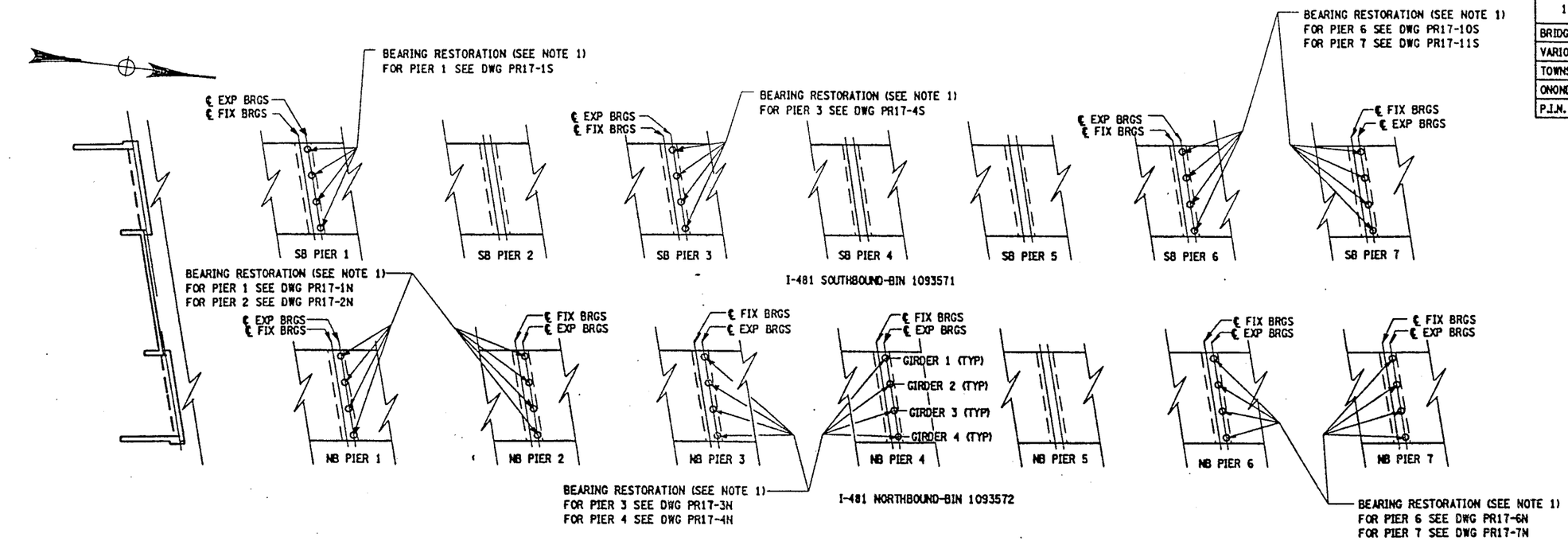

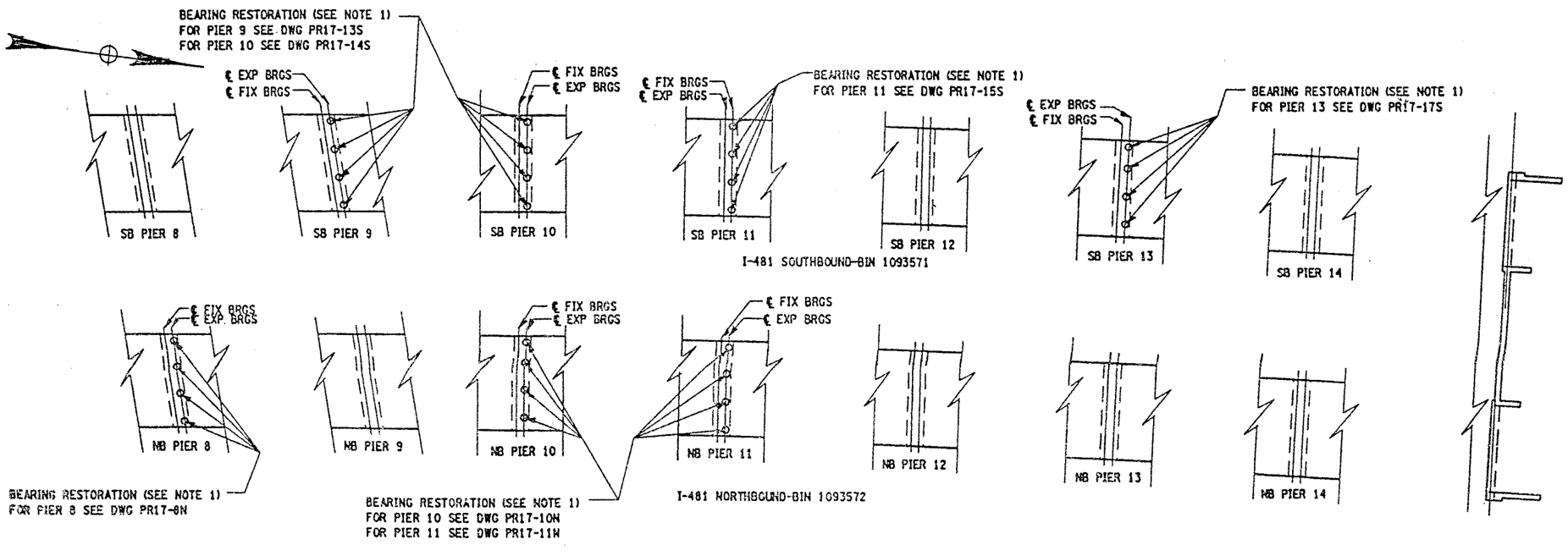

BRIDGE PLAN SCHEMATIC
SCALE 1:300

NOTES

1. BRIDGE BEARING RESTORATION ITEM 15565.4302M AND EITHER STRUCTURAL LIFTING OPERATION -(TYPE B) ITEM 585.02M OR STRUCTURAL LIFTING OPERATION -(TYPE C) ITEM 585.03M

ALL DIMENSIONS ARE IN m UNLESS OTHERWISE NOTED

AS BUILT REVISIONS

SIGNATURE | DATE

INTERSTATE 481 SB & NB
OVER
CSX RAILROAD

BEARING RESTORATION DETAILS
BRIDGE PLAN SCHEMATIC

STATE OF NEW YORK
DEPARTMENT OF TRANSPORTATION

FILENAME	REGION	DATE	DRAWING NO.
305613ZZM1A	3	10/02	BR-11

CHECKED BY
DRAFTED BY
ESTIMATED BY
DESIGNED BY
JOB MANAGER
DESIGN SUPERVISOR

FED ROAD REG. NO.	STATE	CONTRACT NO.	SHEET NO.	TOTAL SHEETS
1	N.Y.	D259214	364	432

BRIDGE REHABILITATION PROJECT (ELEMENT SPECIFIC)
VARIOUS BRIDGES ON INTERSTATE 481
TOWNS OF DEWITT AND CICERO
ONONDAGA COUNTY
P.I.N. 305613 | B.I.N. ALL BINS

BRIDGE JOINT TABLE

B.I.N. NUMBER	JOINT LOCATION	JOINT SKEW	SPAN(S) LENGTH FOR JOINT (METERS)	JOINT BEND LOCAT'N RT	JOINT BEND LOCAT'N LT	EXISTING JOINT TYPE	PROPOSED JOINT TYPE	CURB TO CURB DISTANCE (METERS) (SEE NOTES)	FASCIA & MEDIAN LENGTH (METERS) LT/RT	TOTAL LENGTH (METERS)	JOINT ITEM NUMBER(S)	DRAWING NUMBER SECT VIEW	DRAWING NUMBER PLAN VIEW	DRAWING NUMBER FASCIA DETAIL
1093572	SOUTH ABUT.	8°-43'-42"	26.212	N	N	ACJ/ADA	MOD-1	10.330	.616/.616	11.562	566.01M	JD-55	JD-53	JD-56
	PIER 1	8°-43'-42"	46.939	N	N	OPEN	NONE	10.330	.616/.616	11.562	——	JD-56	——	——
	PIER 2	8°-43'-42"	51.511	N	N	OPEN	NONE	10.330	.616/.616	11.562	——	JD-56	——	——
	PIER 3	8°-43'-42"	59.740	N	N	OPEN	NONE	10.330	.616/.616	11.562	——	——	——	——
	PIER 4	8°-43'-42"	59.740	N	N	OPEN	NONE	10.330	.616/.616	11.562	——	——	——	——
	PIER 5	8°-43'-42"	59.740	N	N	OPEN	NONE	10.330	.616/.616	11.562	——	——	——	——
	PIER 6	8°-43'-42"	37.490	N	N	ACJ	MOD-1	10.330	.616/.616	11.562	566.01M	JD-55	JD-54	JD-56
	PIER 7	8°-43'-42"	37.490	N	N	ACJ	MOD-1	10.330	.616/.616	11.562	566.01M	JD-55	JD-54	JD-56
	PIER 8	8°-43'-42"	37.490	N	N	ACJ	MOD-1	10.330	.616/.616	11.562	566.01M	JD-55	JD-54	JD-56
	PIER 9	8°-43'-42"	37.490	N	N	ACJ	MOD-1	10.330	.616/.616	11.562	566.01M	JD-55	JD-54	JD-56
	PIER 10	0°-00'-00"	37.490	N	N	ACJ	MOD-1	10.210	.610/.610	11.562	566.01M	JD-55	JD-54	JD-56
	PIER 11	0°-00'-00"	37.490	N	N	ACJ	MOD-1	10.210	.610/.610	11.430	566.01M	JD-55	JD-54	JD-56
	PIER 12	0°-00'-00"	37.490	N	N	ACJ	MOD-1	10.210	.610/.610	11.430	566.01M	JD-55	JD-54	JD-56
	PIER 13	0°-00'-00"	37.490	N	N	ACJ	MOD-1	10.210	.610/.610	11.430	566.01M	JD-55	JD-54	JD-56
	PIER 14	0°-00'-00"	37.490	N	N	ACJ	MOD-1	10.210	.610/.610	11.430	566.01M	JD-55	JD-54	JD-56
	NORTH ABUT.	0°-00'-00'	——	N	N	ADA	RADA	10.210	.610/.610	11.430	——	JD-55	JD-54	JD-56
1093671	SOUTH ABUT.	10°-12'-45"	——	N	N	ADA	RADA	15.795	.464/.464	16.724	——	JD-58	JD-57	JD-59
	NORTH ABUT.	10°-12'-45"	34.747	N	N	ACJ/ADA	MAC-5	15.795	.464/.464	16.724	567.35M	JD-58	JD-57	JD-59
1093672	SOUTH ABUT.	10°-12'-45"	——	N	N	ADA	RADA	15.795	.464/.464	16.724	——	JD-58	JD-57	JD-59
	NORTH ABUT.	10°-12'-45"	34.747	N	N	ACJ/ADA	MAC-5	15.795	.464/.464	16.724	567.35M	JD-58	JD-57	JD-59

LEGEND

EXISTING JOINT TYPE:

ACJ = ARMORED COMPRESSION JOINT SYSTEM
MOD = MODULAR JOINT SYSTEM
MAC = MODIFIED ARMORED COMPRESSION SYSTEM (NO HORIZ. ARMORING ANGLE)
ADA = ARMORED DECK ANGLE
SS = STRIP SEAL JOINT
OPEN = OPEN JOINT

PROPOSED JOINT TYPE:

MAC-1 = MOD. ARM./COMP. SEAL JT. SYS. (A-1)
MAC-2 = MOD. ARM./COMP. SEAL JT. SYS. (A-2)
MAC-5 = MOD. ARM./COMP. SEAL JT. SYS. (A-5)
MAC-6 = MOD. ARM./COMP. SEAL JT. SYS. (A-6)
RCS = REPLACE EXISTING COMPRESSION SEAL
RADA = REMOVE ARMOR DECK ANGLE
MOD-1 = MODULAR JT. SYS. (ONE-CELL)
MOD-2 = MODULAR JT. SYS. (TWO-CELL)

JOINT BEND LOCATION:

N = NO BENDS
CRB = CURB LINE
PAV'T = PAVEMENT

GENERAL NOTES:

- ALL MEASUREMENTS SHALL BE FIELD VERIFIED.
- CURB TO CURB LENGTHS ARE MEASURED ALONG ℄ OF JOINT.
- MULTIPLE DIMENSIONS ARE SHOWN LOOKING UP-STATION, LEFT TO RIGHT.
- ALL DIMENSIONS ARE SHOWN IN METERS.

INFORMATIONAL NOTES:

BIN 1093572

CLEAN EXISTING DRAINAGE SYSTEMS AT OPEN JOINTS (OPEN JOINTS TO REMAIN). AS SHOWN ON CONTRACT PLANS OR AS DIRECTED BY THE ENGINEER.

FOR JOINT DETAILS REFER TO THE FOLLOWING DRAWINGS:

DWG. NO. JD-1 - MODIFIED ARMORED COMPRESSION SEAL JOINT SYSTEM.
DWG. NO. JD-24 - ONE-CELL MODULAR JOINT SYSTEM.
DWG. NO. JD-25 - TWO-CELL MODULAR JOINT SYSTEM.

LIST OF BRIDGE JOINT ITEMS USED:

ITEM 566.01M - MODULAR EXP. JOINT SYSTEM ONE-CELL (m)
ITEM 566.02M - MODULAR EXP. JOINT SYSTEM TWO-CELL (m)
ITEM 567.31M - MODIFIED ARMORED JOINT SYSTEM W/ COMP. SEAL TYPE A1 (m)
ITEM 567.32M - MODIFIED ARMORED JOINT SYSTEM W/ COMP. SEAL TYPE A2 (m)
ITEM 567.35M - MODIFIED ARMORED JOINT SYSTEM W/ COMP. SEAL TYPE A5 (m)
ITEM 567.36M - MODIFIED ARMORED JOINT SYSTEM W/ COMP. SEAL TYPE A6 (m)
ITEM 16567.640001M - REPLACE COMPRESSION SEAL FOR EXISTING BRIDGE JOINTS (m)

ALL DIMENSIONS ARE IN m UNLESS OTHERWISE NOTED

AS BUILT REVISIONS

SIGNATURE DATE

INTERSTATE 481 VARIOUS BRIDGES

BRIDGE JOINT TABLE

STATE OF NEW YORK
DEPARTMENT OF TRANSPORTATION

FILENAME	REGION	DATE	DRAWING NO.
305613AJJA1	3	10/02	JT-4

CHECKED BY
DRAFTED BY
ESTIMATED BY
CHECKED BY
DESIGNED BY
JOB MANAGER
DESIGN SUPERVISOR

FED ROAD REG. NO.	STATE	CONTRACT NO.	SHEET NO.	TOTAL SHEETS
1	N.Y.	D259214	365	432

BRIDGE REHABILITATION PROJECT (ELEMENT SPECIFIC)

VARIOUS BRIDGES ON INTERSTATE 481

TOWNS OF DEWITT AND CICERO

ONONDAGA COUNTY

P.I.N. 305613 | B.I.N. ALL BIN'S

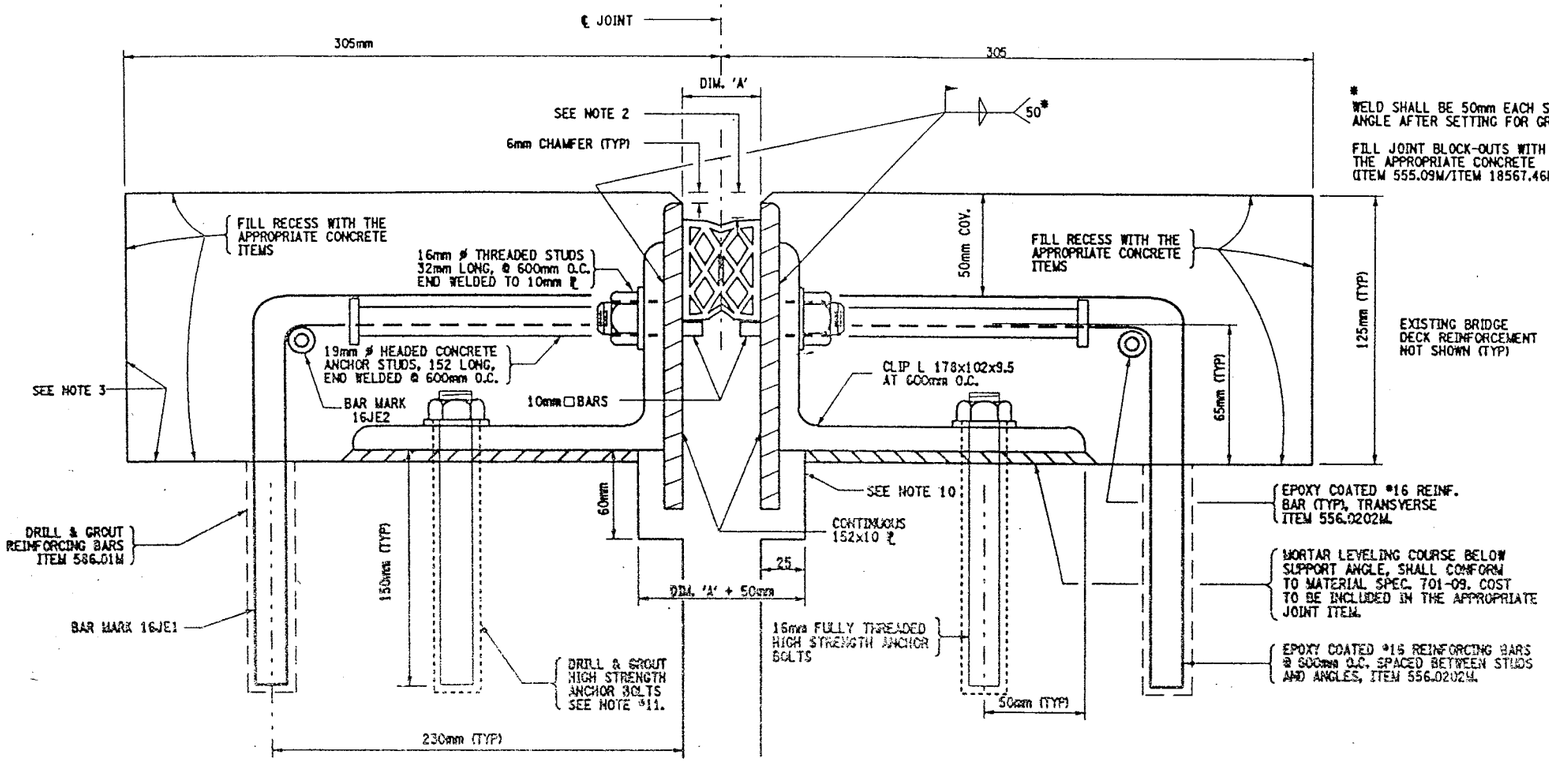

* WELD SHALL BE 50mm EACH SIDE OF ANGLE AFTER SETTING FOR GRADE

FILL JOINT BLOCK-OUTS WITH THE APPROPRIATE CONCRETE (ITEM 555.09M/ITEM 18567.46M)

MODIFIED ARMORED COMPRESSION JOINT DETAIL

FOR INSTALLATION LOCATIONS SEE JOINT TABLE

NOT TO SCALE

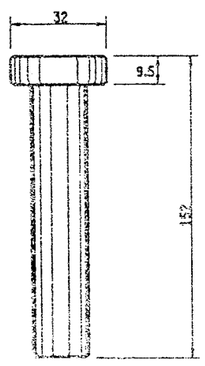

DETAIL OF HEADED CONCRETE ANCHOR STUD

NOT TO SCALE

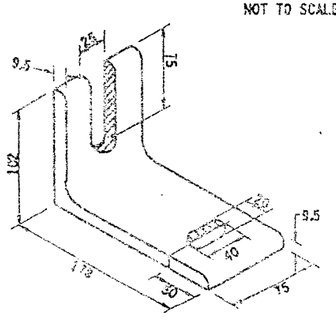

DETAIL OF CLIP ANGLE

NOT TO SCALE

NOTE:

ALL CUTTING TO BE DONE WITH A COPING SAW, SOAP AND WATER

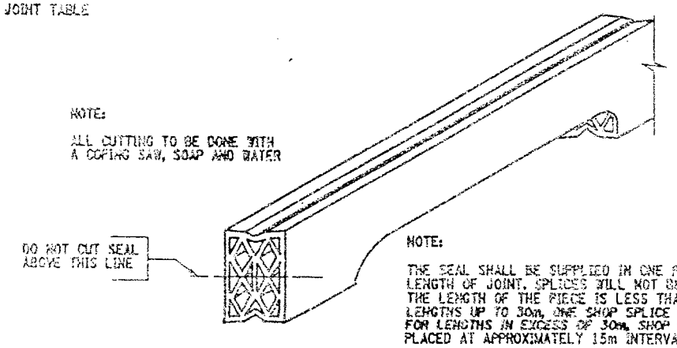

NOTE:

THE SEAL SHALL BE SUPPLIED IN ONE PIECE FOR THE FULL LENGTH OF JOINT. SPLICES WILL NOT BE PERMITTED WHEN THE LENGTH OF THE PIECE IS LESS THAN 15m. FOR LENGTHS UP TO 30m, ONE SHOP SPLICE WILL BE PERMITTED. FOR LENGTHS IN EXCESS OF 30m, SHOP SPLICES MAY BE PLACED AT APPROXIMATELY 15m INTERVALS.

DETAIL FOR CUTTING SEAL

NOT TO SCALE

GENERAL NOTES:

1. THE TEMPERATURE OF THE BRIDGE MUST BE TAKEN ON THE STRUCTURAL STEEL SURFACE TO DETERMINE THE TEMPERATURE CORRECTION FOR THE JOINT OPENINGS.
2. THIS DEPTH SHALL BE INDICATED ON THE SHOP DRAWINGS AND SHALL BE SUCH THAT WHEN THE SEAL IS COMPRESSED TO 50% OF ITS NORMAL WIDTH, THE TOP OF THE SEAL SHALL BE NOT LESS THAN 6mm NOR MORE THAN 19mm BELOW THE TOP OF THE ROADWAY.
3. RECESSES RECEIVING ITEM 555.09M. AFTER SURFACE PREPARATION, THOROUGHLY WET THE CONCRETE SURFACE AND ALL POROUS SURFACES TO BE IN CONTACT WITH NEW CONCRETE, FOR 12 HOURS. NOTE THE USE OF MATERIAL SPECIF. 705-22 PORTLAND CEMENT MORTAR BONDING GROUT HAS BEEN ELIMINATED, SEE INSERT IN PROJECT PROPOSAL.
4. A WATER-TIGHT INTEGRITY TEST SHALL BE PERFORMED BY THE CONTRACTOR AT ALL COMPRESSION SEAL JOINT INSTALLATIONS. THE FOLLOWING TEST PARAMETERS SHALL BE INCORPORATED IN THE TEST:
   1. A 15 MINUTE MINIMUM PERIOD OF STANDING WATER, WITH A 25mm MINIMUM DEPTH SHALL BE USED.
   2. IN ADDITION, IN LOCATIONS OF COPED AREAS OF THE SEAL, BENDS, ETC., WATER PRESSURE SHALL BE APPLIED, TO THE SATISFACTION OF THE EIC FOR A 15 MINUTE PERIOD.
   3. LIMITS OF TEST AREA SHALL BE FROM FACE OF CURB TO FACE OF CURB ON THE DECK SURFACE.
5. NO PAYMENT WILL BE MADE TO THE CONTRACTOR FOR THE JOINT IF, IN THE OPINION OF THE ENGINEER, THE INSTALLED JOINT LEAKS WITHIN THE 15 MINUTE TEST PERIOD.
6. PRIOR TO THE START OF WORK AT EACH JOINT, THE CONTRACTOR SHALL SUBMIT A WRITTEN PLAN FOR THE SPECIFICS OF THE TESTING, INCLUDING CONTAINMENT OF THE WATER AND THE METHOD TO BE USED FOR ACCESS BY THE E.I.C. TO THE BOTTOM OF THE JOINT BEING TESTED.
7. THE COST OF ALL LABOR, EQUIPMENT AND MATERIALS REQUIRED FOR THE TESTING WHICH INCLUDES, BUT IS NOT LIMITED TO:
   1. A CONTAINMENT SYSTEM FOR THE TEST WATER.
   2. PROVISIONS FOR E.I.C. ACCESS TO THE BOTTOM OF THE JOINT.

   SHALL BE INCLUDED IN THE PRICE BID FOR THE RESPECTIVE JOINT ITEMS.
8. THE COST OF ALL LABOR, EQUIPMENT, AND MATERIALS TO INSTALL THE NEW JOINT SHALL BE INCLUDED IN THE UNIT PRICE BID FOR THE APPROPRIATE JOINT ITEM.
9. MORTAR LEVELING COURSE SHALL CONFORM TO MATERIAL SPECIFICATION 701-09 AND SHALL BE INCLUDED IN THE PRICE BID FOR THE APPROPRIATE JOINT ITEM.
10. THE DIMENSIONS OF THE REMOVAL AREA UNDER THE 152x10 PLATES ARE SHOWN TO ALLOW SPACE FOR THE PLATES TO REST FREELY. IF THERE IS ALREADY ADEQUATE SPACE, NO CONCRETE REMOVAL OR REPLACEMENT IS REQUIRED IN THIS AREA.
11. 16 mm ø ASTM A325M ANCHOR BOLT TO BE DRILLED AND GROUTED IN PLACE IN ACCORDANCE WITH THE REQUIREMENTS OF SUB-SECTION 506-3.02. GROUTING MATERIALS SHALL BE IN ACCORDANCE WITH MATERIALS SUB-SECTION 701-07 ANCHORING MATERIALS-CHEMICALLY CURING. HOLES TO BE DRILLED TO THE DIAMETER AND DEPTH RECOMMENDED BY THE MANUFACTURER OF THE GROUTING MATERIAL (MIN. DEPTH OF 150 mm). THE COST OF THE ANCHORS, INCLUDING DRILLING AND GROUTING, SHALL BE INCLUDED IN THE UNIT PRICE BID FOR THE APPROPRIATE JOINT SYSTEM ITEM.
12. IT IS DESIRABLE TO HAVE THE ARMORED JOINT WITH ITS COMPRESSION SEAL ASSEMBLED IN THE SHOP AND DELIVERED TO THE JOB SITE ALL SET FOR INSTALLATION IN ITS PREFORMED RECESS IN THE STRUCTURAL SLAB. IN CASES WHERE THE ARMORED JOINT CANNOT BE ASSEMBLED IN THE SHOP, DUE TO ITS EXCESSIVE LENGTH CAUSING SHIPPING PROBLEMS, THE JOINT SHALL BE SEALED WITH THE COMPRESSION SEAL BEFORE THE STRUCTURE IS OPENED TO TRAFFIC INCLUDING CONSTRUCTION TRAFFIC, AND BEFORE DIS CONTINUING OPERATIONS WHEN WORK IS SUSPENDED DURING THE WINTER.

ALL DIMENSIONS ARE IN mm UNLESS OTHERWISE NOTED

EPOXY POLYSULFIDE GROUT NOTE:

CONTRACTOR MAY WITH THE APPROVAL OF THE ENGINEER USE MATERIAL SPECIFICATION 721-03 EPOXY POLYSULFIDE GROUT, AT THE RECESSES, INSTEAD OF THE 12 HOUR CONTINUOUS PREWETTING REQUIREMENTS (PROJECT PROPOSAL). CONTRACTOR MUST ENSURE PROPER CONSTRUCTION PRACTICES ARE FOLLOWED WHEN USING THIS GROUT. THE USE OF EPOXY POLYSULFIDE GROUT SHALL BE AT NO ADDITIONAL COST TO THE STATE.

SEALS (mm)			ARMORED JOINT SYSTEM	
TYPE	NOMINAL WIDTH	DIM. "A" @ 20°C.	TYPE	END CONDITION
1	44	25	A1	Fixed End Only
2	51	30	A2	Exp. up to 18 m
3	64	38	A3	Exp. over 18 m to 23 m
4	76	44	A4	Exp. over 23 m to 27 m
5	89	52	A5	Exp. over 27 m to 38 m
6	102	60	A6	Exp. over 38 m to 46 m

Maximum Skew Limits: Fixed End - No Limit
Exp. End - 45° A2 thru A6

LIST OF ITEMS USED:

ITEM 555.09M - STRUCT. CONCRETE, CLASS "HP" (CM)
ITEM 556.0202M - EPOXY COATED BAR REINF. FOR STRUCT. (kg)
ITEM 567.31M - MOD. ARMORED JOINT SYSTEM W/ COMP. SEAL TYPE A1 (m)
ITEM 567.32M - MOD. ARMORED JOINT SYSTEM W/ COMP. SEAL TYPE A2 (m)
ITEM 567.35M - MOD. ARMORED JOINT SYSTEM W/ COMP. SEAL TYPE A5 (m)
ITEM 567.36M - MOD. ARMORED JOINT SYSTEM W/ COMP. SEAL TYPE A6 (m)
ITEM 18567.46M - ELASTOMERIC CONC. FOR BRIDGE JT. SYSTEMS (m)
ITEM 586.01M - DRILL & GROUT REINF. BARS (mm)

AS BUILT REVISIONS

SIGNATURE DATE

INTERSTATE 481

COMPRESSION SEAL JOINT DETAILS

STATE OF NEW YORK
DEPARTMENT OF TRANSPORTATION

FILENAME	REGION	DATE	DRAWING NO.
305613AJ.JA1	3	10/02	JD-1

CHECKED BY ____ DRAFTED BY ____ ESTIMATED BY ____ CHECKED BY ____ DESIGNED BY ____ JOB MANAGER ____ DESIGN SUPERVISOR ____

FED ROAD REG. NO.	STATE	CONTRACT NO.	SHEET NO.	TOTAL SHEETS
1	N.Y.	D259214	417	432

BRIDGE REHABILITATION PROJECT (ELEMENT SPECIFIC)
VARIOUS BRIDGES ON INTERSTATE 481
TOWNS OF DEWITT AND CICERO
ONONDAGA COUNTY
P.I.N. 305613 | B.I.N. 1093571 & 1093572

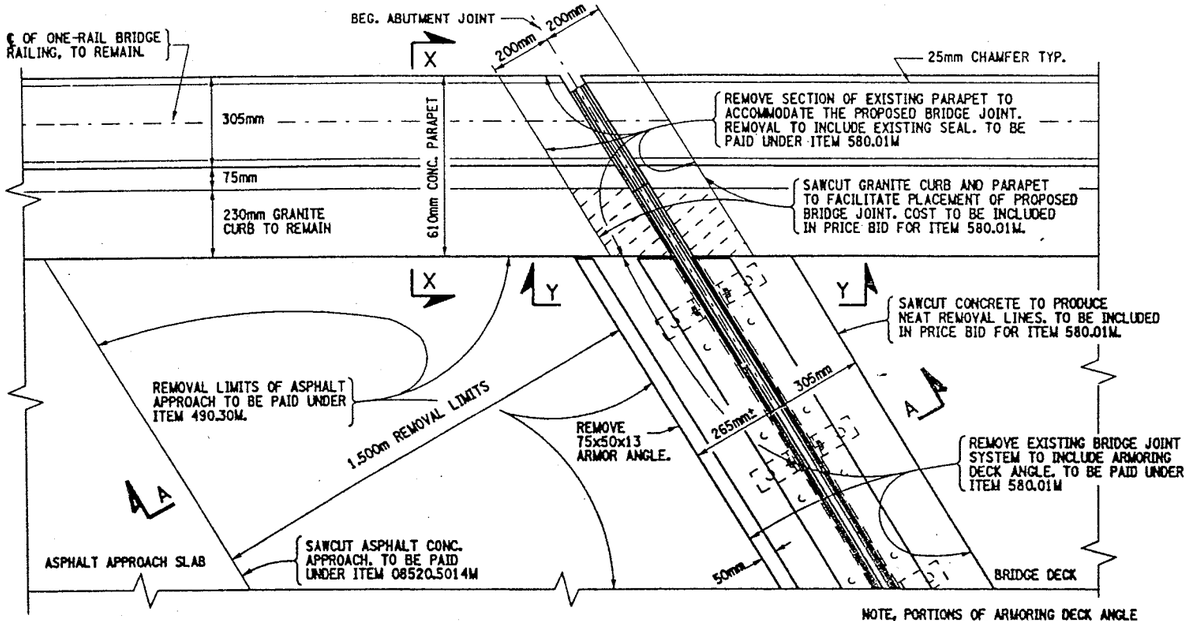

EXISTING BEG. ABUTMENT JOINT PLAN VIEW

BIN 1093571 - SOUTH ABUT.
BIN 1093572 - SOUTH ABUT.

NOT TO SCALE

NOTE, PORTIONS OF ARMORING DECK ANGLE AT BIN 1093572 NB SOUTH ABUT. HAS BEEN REMOVED BY STATE MAINT. FORCES.

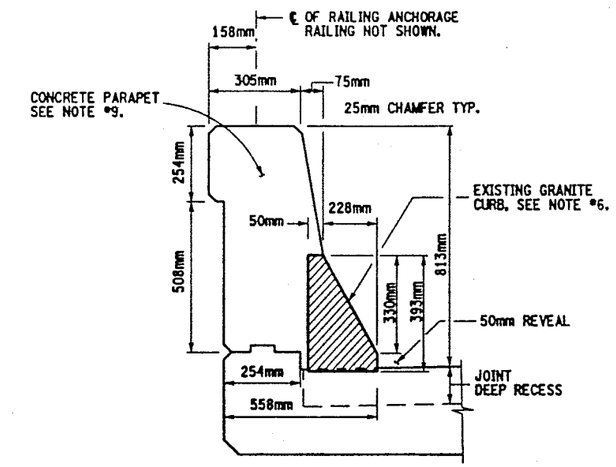

SECTION X-X
PARAPET CONCRETE REMOVAL DETAIL

NOT TO SCALE

NOTES:

1. REMOVAL OF ARMORING DECK ANGLE SHALL BE FROM CURB TO CURB.
2. FOR SECTION VIEWS SEE DWG. NO. JD-55 & JD-56.
3. FOR ADDITIONAL INFORMATION REFER TO DWG. NO. JT-3 & JT-4. ALSO SEE ORIGINAL CONTRACT NUMBER FISH 70-7 AND CONTRACT NUMBER D251436 FOR PREVIOUS WORK.
4. THE EXISTING BRIDGE JOINTS BUTT UP TO PARAPET. THE SEAL THRU THE PARAPET IS PLACED SEPARATE.
5. LEFT SIDE OF DECK SHOWN, RIGHT SIDE IDENTICAL.
6. SAW CUTTING OF CONCRETE AND GRANITE CURB SHALL BE INCLUDED IN PRICE BID FOR ITEM 580.01M.
7. REFER TO DWG. NO. JD-24 FOR ONE-CELL MODULAR JOINT SYSTEM DETAILS AND NOTES.
8. FILL RECESS AT PARAPET WITH CLASS "HP" CONCRETE RESTORE TO ORIGINAL DIMENSIONS.
9. REMOVAL DIMENSIONS AT PARAPETS MAY BE INCREASED TO EMCOMPASS ANY DETERIORATED CONCRETE ADJACENT TO THE JOINT BLOCK-OUT AREA, ADBE.
10. FOR SKEW ANGLES SEE NOTE *8, ON DWG. NO. JD-54.

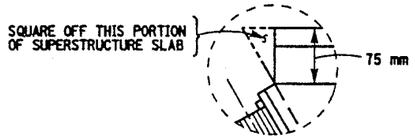

DETAIL "S"

NOT TO SCALE

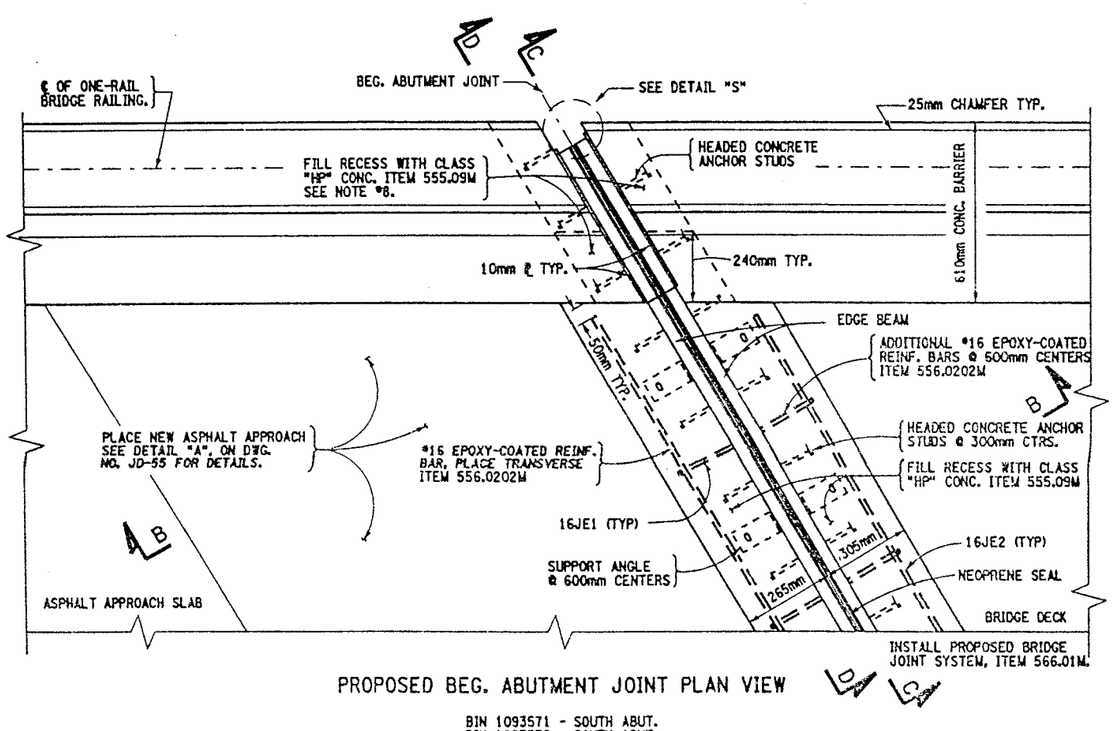

PROPOSED BEG. ABUTMENT JOINT PLAN VIEW

BIN 1093571 - SOUTH ABUT.
BIN 1093572 - SOUTH ABUT.

NOT TO SCALE

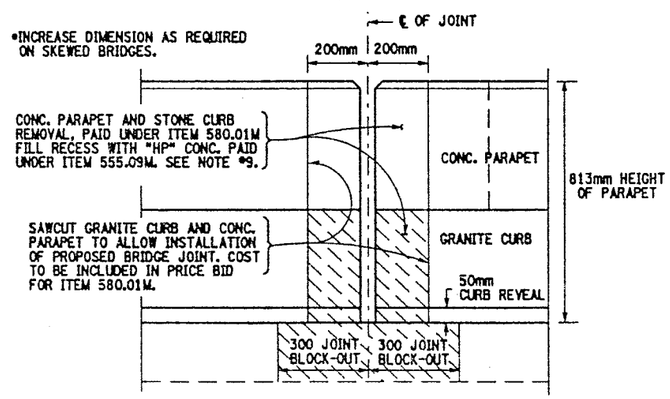

SECTION Y-Y
PARAPET CONCRETE REMOVAL DETAIL

NOT TO SCALE

WORK TO BE DONE:

BIN 1093571 SB

- REMOVE ARMORING DECK ANGLE AND REPLACE BRIDGE JOINT AT BEGINNING ABUTMENT.
- REPAIR CONC. HEADERS AT PIERS 1, 2 & 9.
- CLEAN DRAINAGE SYSTEM AT PIERS 1, 2, 3, 4, 5 & 9.
- REPLACE BRIDGE JOINTS AT PIERS 6, 7, 8, 10, 11, 12, 13 & 14.
- REMOVE ARMORING DECK ANGLE AT END ABUTMENT.

BIN 1093572 NB

- REMOVE ARMORING DECK ANGLE AND REPLACE BRIDGE JOINT AT BEGINNING ABUTMENT.
- REPAIR CONC. HEADERS AT PIERS 1 & 2.
- CLEAN DRAINAGE SYSTEM AT PIERS 1, 2, 3, 4 & 5.
- REPLACE BRIDGE JOINTS AT PIERS 6, 7, 8, 9, 10, 11, 12, 13, & 14.
- REMOVE ARMORING DECK ANGLE AT END ABUTMENT.

ITEMS USED:

ITEM 490.30M	- MISC. COLD MILLING OF BIT. CONC. (SM)
ITEM 08520.5014M	- SAWCUTTING BIT. CONC. (M)
ITEM 555.09M	- STRUCT. CONCRETE, CLASS "HP" (CM)
ITEM 556.0202M	- EPOXY-COATED BAR REINFORCEMENT FOR STRUCT. (Kg)
ITEM 566.01M	- MODULAR EXP. JOINT SYSTEM ONE-CELL (M)
ITEM 580.01M	- REMOVAL OF STRUCT. CONCRETE (CM)

ALL DIMENSIONS ARE IN mm UNLESS OTHERWISE NOTED

AS BUILT REVISIONS

SIGNATURE | DATE

INTERSTATE 481 SB & NB
OVER
CSX RAILROAD YARD
BRIDGE JOINT DETAILS

STATE OF NEW YORK
DEPARTMENT OF TRANSPORTATION

FILENAME	REGION	DATE	DRAWING NO.
305613AJJA1	3	10/02	JD-53

DESIGN SUPERVISOR ____ JOB MANAGER ____ DESIGNED BY ____ CHECKED BY ____ DRAFTED BY ____ CHECKED BY ____ ESTIMATED BY ____

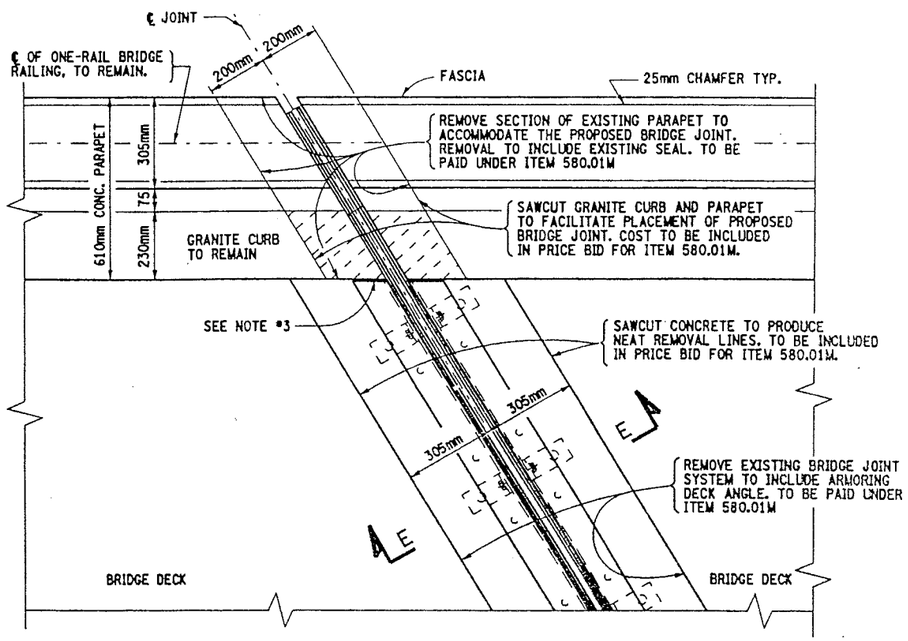

EXISTING PIER JOINT PLAN VIEW

BIN 1093571 - PIERS 6, 7, 8, 10, 11, 12, 13 & 14
BIN 1093572 - PIERS 6, 7, 8, 9, 10, 11, 12, 13 & 14

NOT TO SCALE

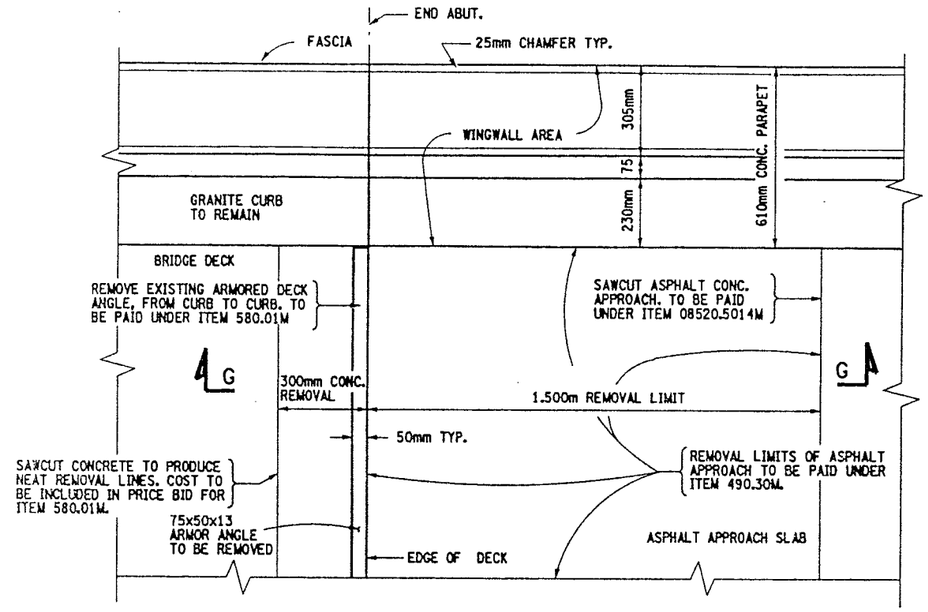

EXISTING END ABUTMENT PLAN VIEW

BIN 1093571 - NORTH ABUTMENT
BIN 1093572 - NORTH ABUTMENT

NOT TO SCALE

FED ROAD REG. NO.	STATE	CONTRACT NO.	SHEET NO.	TOTAL SHEETS
1	N.Y.	D259214	418	432

BRIDGE REHABILITATION PROJECT (ELEMENT SPECIFIC)
VARIOUS BRIDGES ON INTERSTATE 481
TOWNS OF DEWITT AND CICERO
ONONDAGA COUNTY
P.I.N. 305613 B.I.N. 1093571 & 1093572

NOTES:

1. FOR SECTION VIEWS SEE DWG. NO. JD-55 & JD-56.
2. FOR ADDITIONAL INFORMATION REFER TO DWG. NO. JT-3 & JT-4. ALSO SEE ORIGINAL CONTRACT NUMBER FISH 70-7 AND CONTRACT NUMBER D251436 FOR PREVIOUS WORK.
3. THE EXISTING JOINTS AND ARMORING DECK ANGLES BUTT UP TO PARAPET. THE SEAL THRU THE PARAPET IS PLACED SEPARATE.
4. LEFT SIDE OF DECK SHOWN, RIGHT SIDE IDENTICAL.
5. SAW CUTTING OF CONCRETE AND GRANITE CURB SHALL BE INCLUDED IN PRICE BID FOR ITEM 580.01M.
6. REFER TO DWG. NO. JD-24 FOR SINGLE CELL MODULAR JOINT DETAILS AND NOTES.
7. FILL RECESS AT PARAPET WITH CLASS "HP" CONCRETE RESTORE TO ORIGINAL DIMENSIONS.
8. BOTH STRUCTURES HAVE THE FOLLOWING SKEW ANGLES:

   BEGINNING ABUTMENT THROUGH PIER #9 HAVE A SKEW ANGLE OF 8°-43'-42". PIER #10 THROUGH END ABUTMENT HAVE A SKEW ANGLE OF 0°-0'-0".
9. THE INSTALLATION OF NEW JOINT SEALER MATERIAL AT END ABUTMENT PARAPETS SHALL MEET STANDARD SPECIF. 705-06. THE AREA SHALL BE CLEANED PRIOR TO PLACEMENT. TO THE SATISFACTION OF THE ENGINEER. COSTS TO BE INCLUDED IN PRICE BID FOR ITEM 555.09M.

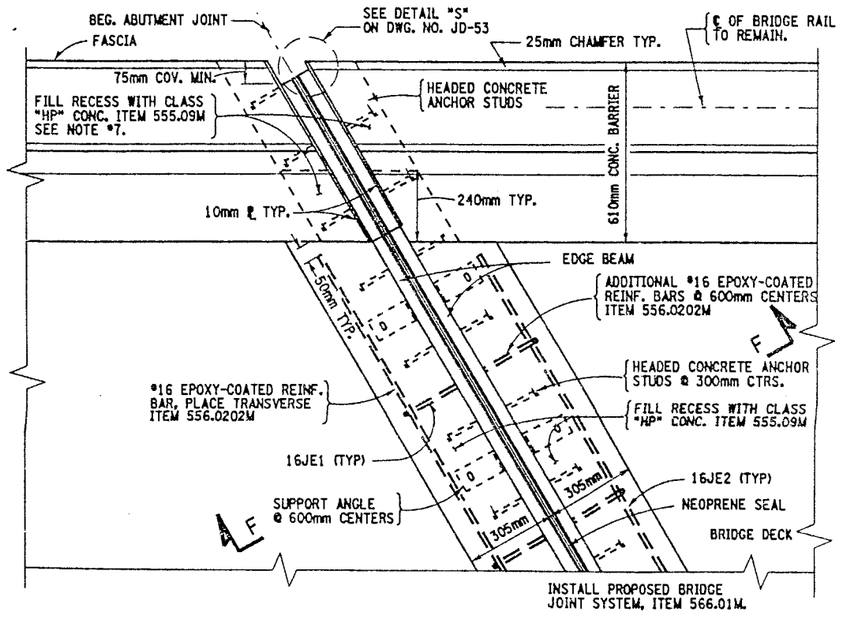

PROPOSED PIER JOINT PLAN VIEW

BIN 1093571 - PIERS 6, 7, 8, 10, 11, 12, 13 & 14
BIN 1093572 - PIERS 6, 7, 8, 9, 10, 11, 12, 13 & 14

NOT TO SCALE

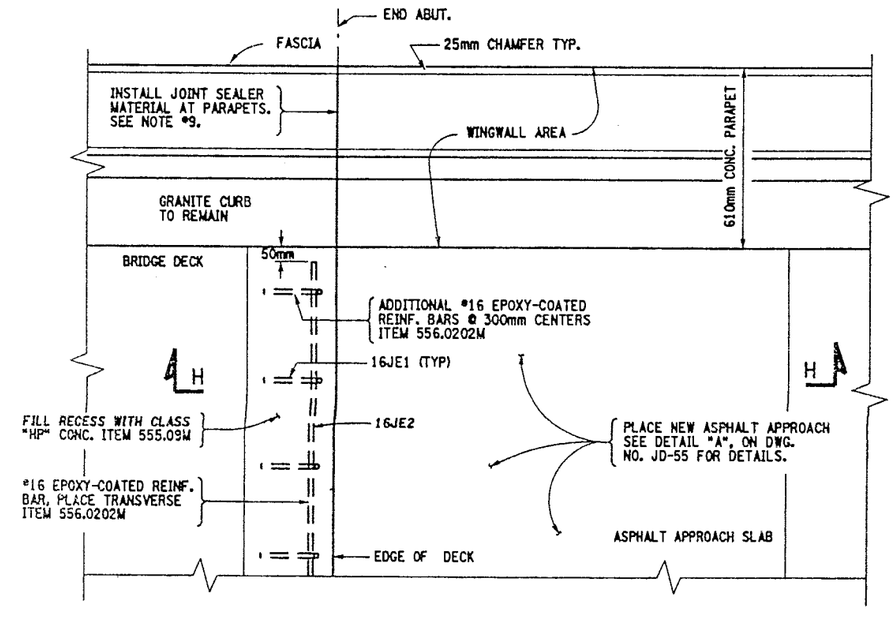

PROPOSED END ABUTMENT PLAN VIEW

BIN 1093571 - NORTH ABUTMENT
BIN 1093572 - NORTH ABUTMENT

NOT TO SCALE

ITEMS USED:

ITEM 490.30M	- MISC. COLD MILLING OF BIT. CONC. (SM)
ITEM 08520.5014M	- SAWCUTTING BIT. CONC. (M)
ITEM 555.09M	- STRUCT. CONCRETE, CLASS "HP" (CM)
ITEM 556.0202M	- EPOXY-COATED BAR REINFORCEMENT FOR STRUCT. (Kg)
ITEM 566.01M	- MODULAR EXP. JOINT SYSTEM ONE-CELL (M)
ITEM 580.01M	- REMOVAL OF STRUCT. CONCRETE (CM)

ALL DIMENSIONS ARE IN mm UNLESS OTHERWISE NOTED

AS BUILT REVISIONS

SIGNATURE DATE

INTERSTATE 481 NB & SB
OVER
CSX RAILROAD YARD

BRIDGE JOINT DETAILS

STATE OF NEW YORK
DEPARTMENT OF TRANSPORTATION

FILENAME	REGION	DATE	DRAWING NO.
305613AJJA1	3	10/02	JD-54

DESIGN SUPERVISOR ____ JOB MANAGER ____ DESIGNED BY ____ ESTIMATED BY ____ DRAFTED BY ____ CHECKED BY ____ CHECKED BY ____

FED ROAD REG. NO.	STATE	CONTRACT NO.	SHEET NO.	TOTAL SHEETS
1	N.Y.	D259214	419	432

BRIDGE REHABILITATION PROJECT (ELEMENT SPECIFIC)
VARIOUS BRIDGES ON INTERSTATE 481
TOWNS OF DEWITT AND CICERO
ONONDAGA COUNTY
P.I.N. 305613 — B.I.N. 1093571 & 1093572

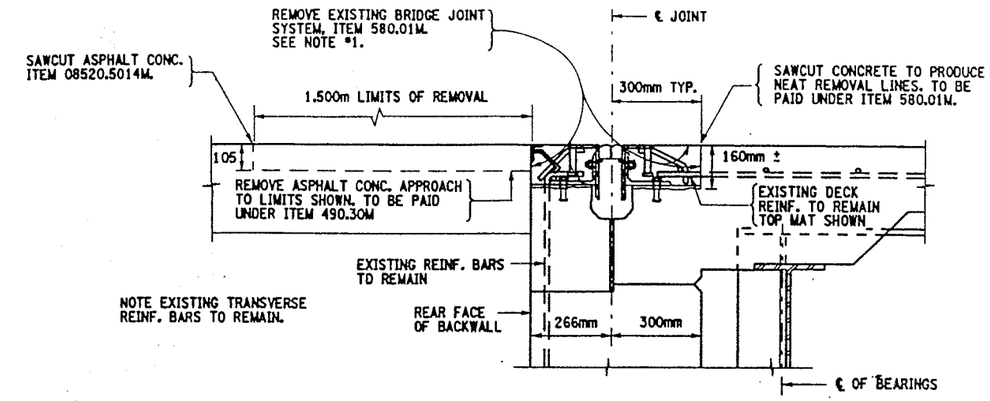

SECTION A-A
EXISTING BEGINNING ABUTMENT JOINT
BIN 1093571 - SOUTH ABUT.
BIN 1093572 - SOUTH ABUT.
NOT TO SCALE

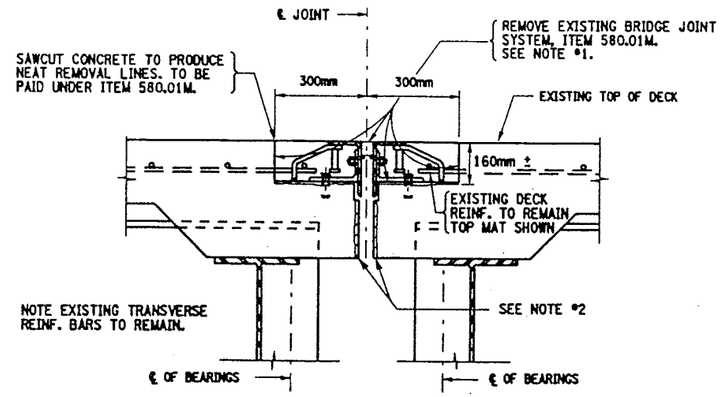

SECTION E-E
EXISTING PIER JOINT TYPICAL
BIN 1093571 - PIERS 6, 7, 8, 10, 11, 12, 13 & 14
BIN 1093572 - PIERS 6, 7, 8, 9, 10, 11, 12, 13 & 14
NOT TO SCALE

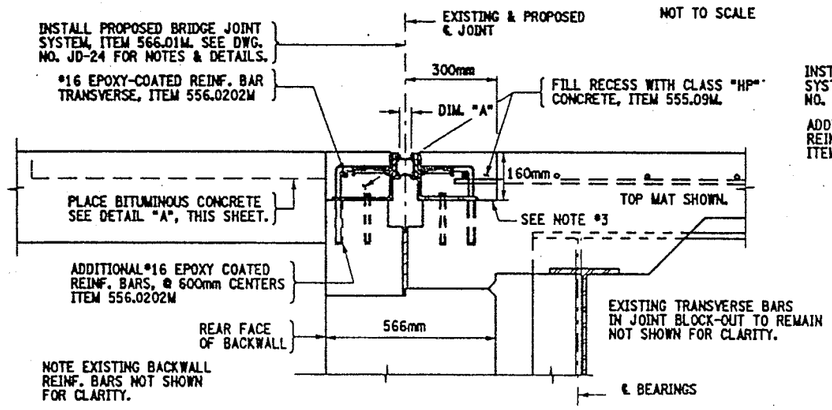

SECTION B-B
PROPOSED BEGINNING ABUTMENT JOINT
BIN 1093571 - SOUTH ABUT.
BIN 1093572 - SOUTH ABUT.
NOT TO SCALE

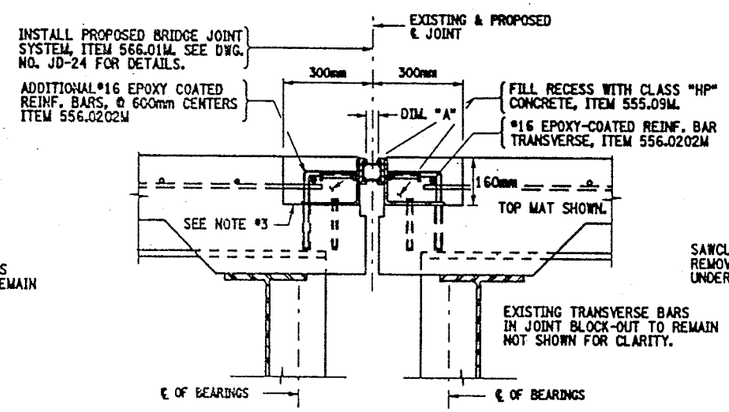

SECTION F-F
PROPOSED PIER JOINT TYPICAL
BIN 1093571 - PIERS 6, 7, 8, 10, 11, 12, 13 & 14
BIN 1093572 - PIERS 6, 7, 8, 9, 10, 11, 12, 13 & 14
NOT TO SCALE

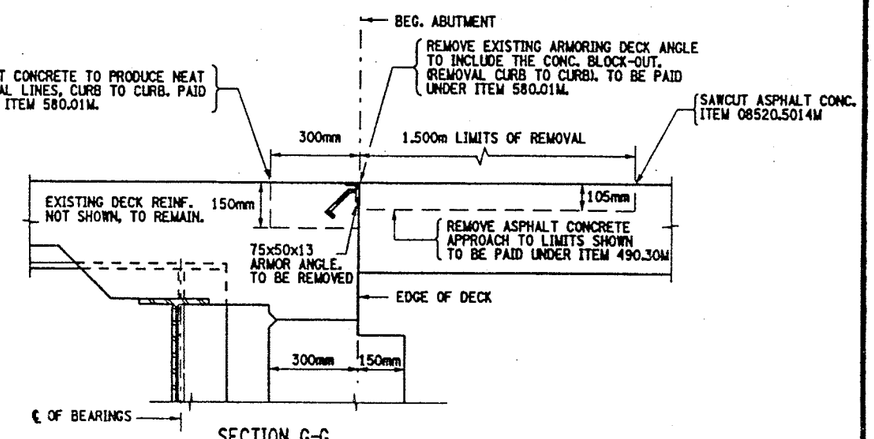

SECTION G-G
EXISTING BEG. ABUTMENT JOINT
BIN 1093571 - NORTH ABUTMENT
BIN 1093572 - NORTH ABUTMENT
NOT TO SCALE

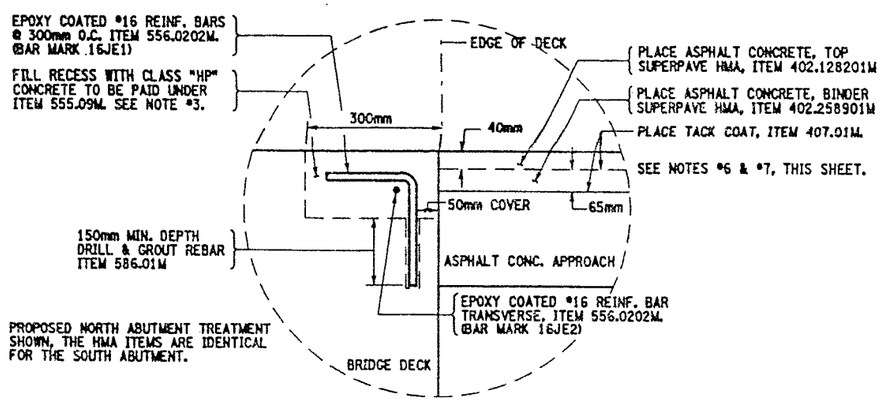

DETAIL "A"
NOT TO SCALE

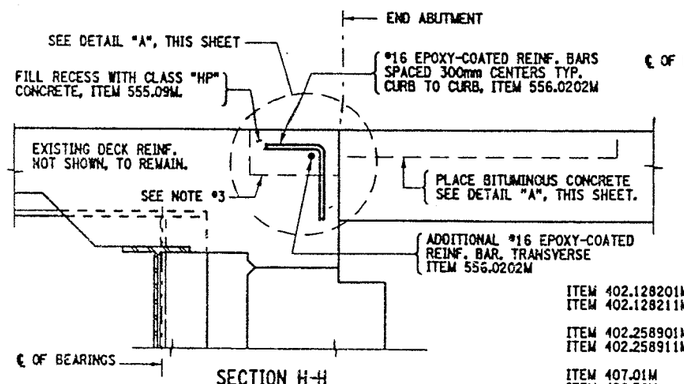

SECTION H-H
PROPOSED END ABUTMENT JOINT
BIN 1093571 - NORTH ABUTMENT
BIN 1093572 - NORTH ABUTMENT
NOT TO SCALE

NOTES:

1. REMOVAL OF THE EXISTING BRIDGE JOINT SYSTEM TO LIMITS SHOWN OR AS DIRECTED BY ENGINEER. REMOVAL SHALL INCLUDE ANY ARMORING DECK ANGLE AND ANY ADDITIONAL REBAR WHICH IS WELDED TO THE SEGMENT ANGLE AND THE ORIGINAL REINFORCEMENT. COST TO BE INCLUDED IN PRICE BID FOR ITEM 580.01M.
2. REMOVAL OF A PORTION OF THE BRIDGE DECK MAY BE NECESSARY TO ALLOW FOR EXPANSION OF BRIDGE, AOBE. SEE SECTION VIEW ON DWG. NO. JD-24. COST TO BE INCLUDED IN PRICE BID FOR ITEM 580.01M.
3. RECESSES RECEIVING ITEM 555.09M, AFTER SURFACE PREPARATION, THOROUGHLY WET THE CONCRETE SURFACES AND ALL POROUS SURFACES TO BE IN CONTACT WITH NEW CONCRETE FOR 12 HOURS. NOTE, THE USE OF MATERIAL SPECIF. T05-22 PORTLAND CEMENT MORTAR BONDING GROUT HAS BEEN ELIMINATED, (PROJECT PROPOSAL).
4. ACTUAL BRIDGE JOINT BLOCK-OUT DIMENSIONS MAY VARY. REMOVAL LIMITS SHALL BE TO EXISTING BLOCK-OUT LOCATIONS, OR AS DIRECTED BY THE ENGINEER.
5. PROPOSED PARTIAL PLAN VIEWS, SEE DWG. NO. JD-53 & JD-54.
6. ALL SURFACES OF HMA SHALL BE CLEANED AND TACK-COATED PRIOR TO HMA PLACEMENT. ALL COSTS SHALL BE INCLUDED IN THE UNIT PRICE BID FOR ITEM 407.01M.
7. ANY USE OF SUPERPAVE HMA ITEMS SHALL INCLUDE THE APPROPRIATE PLANT PRODUCTION QUALITY ADJUSTMENT ITEMS.

ITEMS USED:

ITEM 402.128201M	- SUPERPAVE HMA F2, 12.5mm (MT)
ITEM 402.128211M	- PLANT PRODUCTION QUALITY ADJUSTMENT TO 402.128201M (QU)
ITEM 402.258901M	- SUPERPAVE HMA F9, 25.0mm (MT)
ITEM 402.258911M	- PLANT PRODUCTION QUALITY ADJUSTMENT TO 402.258901M (QU)
ITEM 407.01M	- TACK COAT (L)
ITEM 490.30M	- MISC. COLD MILL OF BITUMINOUS CONC. (SM)
ITEM 08520.5014M	- SAWCUTTING BIT. CONC. (M)
ITEM 555.09M	- STRUCT. CONCRETE, CLASS "HP" (CM)
ITEM 556.0202M	- EPOXY-COATED BAR REINF. FOR STRUCT. (KG)
ITEM 566.01M	- MOD. EXP. JOINT SYSTEM ONE-CELL (M)
ITEM 580.01M	- REMOVAL OF STRUCT. CONCRETE (CM)
ITEM 586.01M	- DRILL & GROUT REINF. BARS (MM)

ALL DIMENSIONS ARE IN mm UNLESS OTHERWISE NOTED

AS BUILT REVISIONS

SIGNATURE — DATE

INTERSTATE 481 NB & SB
OVER
CSX RAILROAD YARD
BRIDGE JOINT DETAILS

STATE OF NEW YORK
DEPARTMENT OF TRANSPORTATION

FILENAME	REGION	DATE	DRAWING NO.
305613AJJA1	3	10/02	JD-55

CHECKED BY
DRAFTED BY
ESTIMATED BY
CHECKED BY
DESIGNED BY
JOB MANAGER
DESIGN SUPERVISOR

FED ROAD REG. NO.	STATE	CONTRACT NO.	SHEET NO.	TOTAL SHEETS
1	N.Y.	D259214	420	432

BRIDGE REHABILITATION PROJECT (ELEMENT SPECIFIC)
VARIOUS BRIDGES ON INTERSTATE 481
TOWNS OF DEWITT AND CICERO
ONONDAGA COUNTY
P.I.N. 305613 B.I.N. 1093571 & 1093572

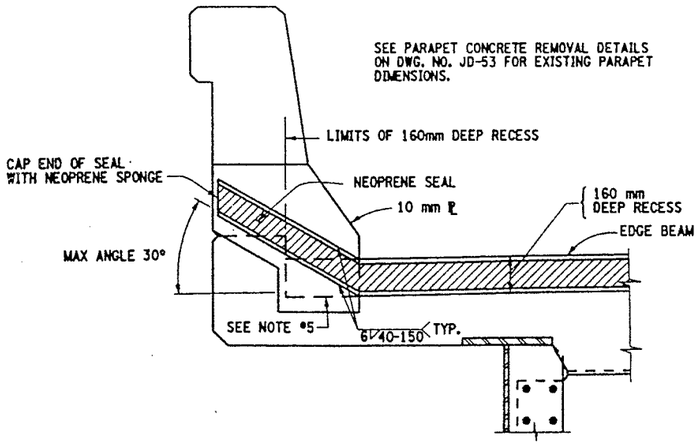

PROPOSED SEAL PLACEMENT TYPICAL SECTION C-C (CONCRETE TRAFFIC BARRIER)

NOT TO SCALE

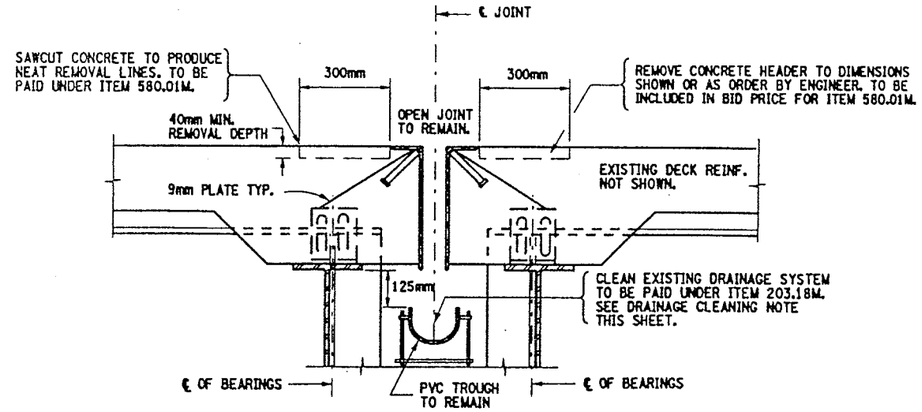

EXISTING OPEN JOINT AT PIERS
(REPAIRS TO OPEN JOINT HEADERS)

BIN 1093571 - PIERS 1, 2, & 9
BIN 1093572 - PIERS 1 & 2

NOT TO SCALE

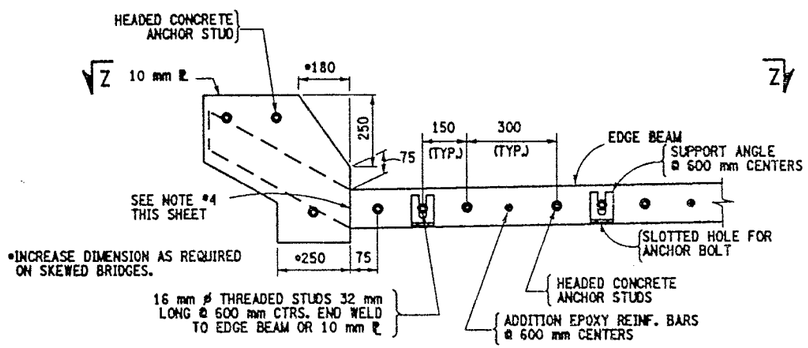

PROPOSED STEEL PLATE TYPICAL SECTION D-D (CONCRETE TRAFFIC BARRIER)

(ONLY THE STEEL SHOWN)

NOT TO SCALE

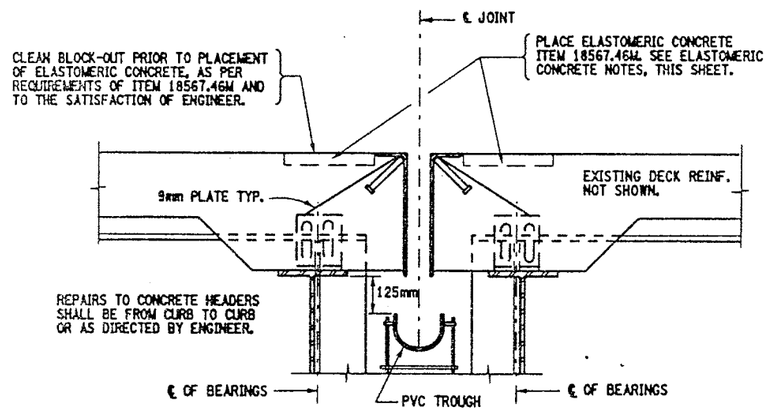

PROPOSED OPEN JOINT AT PIERS
(REPAIRS TO OPEN JOINT HEADERS)

BIN 1093571 - PIERS 1, 2, & 9
BIN 1093572 - PIERS 1 & 2

NOT TO SCALE

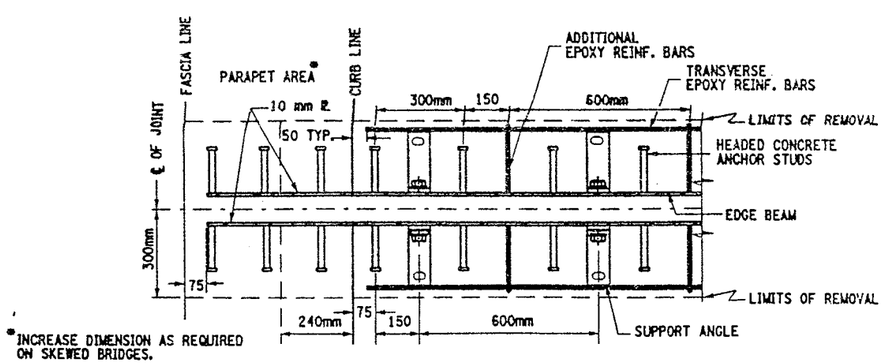

PLAN VIEW OF STEEL ℞ SECTION Z-Z
TYPICAL SPACING FOR SINGLE CELL

NOT TO SCALE

NOTES:

1. ALL NOTES & DETAILS ON DWG. NO. JD-24 SHALL APPLY.
2. REFER TO DWG. NO. JD-53 & JD-54 FOR PROPOSED PARTIAL PLAN VIEWS.
3. FOR CALCULATION OF "J" DIMENSION REFER TO DWG. NO. JD-24.
4. ALL WELDS SHALL BE GROUND SMOOTH TO THE SATISFACTION OF THE ENGINEER, ON SEAL CONTACT SIDE OF EDGE BEAM.
5. RECESSES RECEIVING ITEM 555.09M, AFTER SURFACE PREPARATION, THOROUGHLY WET THE CONCRETE SURFACES AND ALL POROUS SURFACES TO BE IN CONTACT WITH NEW CONCRETE FOR 12 HOURS. NOTE, THE USE OF MATERIAL SPECIF. 705-22 PORTLAND CEMENT MORTAR BONDING GROUT HAS BEEN ELIMINATED. (PROJECT PROPOSAL).

CLEAN DRAINAGE SYSTEM NOTE:

THE FOLLOWING CLOSED DRAINAGE SYSTEMS SHALL BE CLEANED UNDER THIS CONTRACT.

BIN 1093571 - PIERS 1, 2, 3, 4, 5, & 9
BIN 1093572 - PIERS 1, 2, 3, 4, 5 & 6

NOTE, AT PIER #6 THE TYPE OF BRIDGE JOINT IS AN ARMORED JOINT WITH COMPRESSION SEAL. THE DOWNSPOUTS ARE CONNECTED TO THE BRIDGE SCUPPERS.

THE CLEANING OF THE EXISTING DRAINAGE SYSTEM (ITEM 203.18M) SHALL BE FROM HOPPER (FASCIA GIRDER) TO HOPPER (FASCIA GIRDER) AND SHALL INCLUDE THE PVC TROUGH AND THE ENTIRE DOWNSPOUT SYSTEM (DIA. OF DOWNSPOUTS VARY) FROM HOPPERS TO OUTLET. REFER TO DWG. NO. DD17-1 THRU DWG. NO. DD17-4 FOR DRAINAGE DETAILS AND PROPOSED MODIFICATIONS TO PIER DOWNSPOUTS.

FOR ESTIMATING THE QUANTITY FOR ITEM 203.18M. THE FOLLOWING INFORMATION IS ASSUMED:

BIN 1093571 - PIERS 1, 2, 3, 4, 5, & 9
(256 METERS TOTAL)

BIN 1093572 - PIERS 1, 2, 3, 4,5 & 6
(269 METERS TOTAL)

CONTRACTOR SHALL TAKE CARE WHEN PERFORMING CLEANING OPERATION NOT TO DAMAGE THE EXISTING DRAINAGE SYSTEM. ANY DAMAGE CAUSED BY CONTRACTOR'S OPERATIONS SHALL BE REPAIRED OR REPLACED AS DEEMED NECESSARY BY THE ENGINEER AT NO ADDITIONAL COST TO THE STATE.

ELASTOMERIC CONCRETE NOTE:

1. AN EXPERIENCED TECHNICAL REPRESENTATIVE EMPLOYED BY THE MANUFACTURER OF THE ELASTOMERIC CONCRETE SHALL BE PRESENT DURING ALL PHASES OF SUBSTRATE PREPARATION AND MATERIAL PLACEMENT.
2. THE WATERTIGHT INTEGRITY TEST SHALL NOT BE REQUIRED FOR THE OPEN JOINT HEADER REPAIRS, WHERE ELASTOMERIC CONCRETE (ITEM 18567.46M) IS USED, FOR THESE TWO STRUCTURES ONLY.
3. THE REMOVAL DIMENSIONS MAY BE ADJUSTED TO ENSURE THAT ALL DETERIORATED CONCRETE ADJACENT TO THE JOINT AREA IS ENCOMPASS, MORE.

ALL DIMENSIONS ARE IN mm UNLESS OTHERWISE NOTED

ITEMS USED:

ITEM 203.18M - CLEAN CLOSED DRAINAGE SYSTEMS (M)
ITEM 18567.46M - ELASTOMERIC CONCRETE FOR BRIDGE JOINT SYSTEMS (M)
ITEM 580.01M - REMOVAL OF STRUCT. CONCRETE (CM)

AS BUILT REVISIONS

SIGNATURE DATE

INTERSTATE 481 NB & SB
OVER
CSX RAILROAD YARD

BRIDGE JOINT DETAILS

STATE OF NEW YORK
DEPARTMENT OF TRANSPORTATION

FILENAME	REGION	DATE	DRAWING NO.
305613AJJA1	3	10/02	JD-56

DESIGN SUPERVISOR ___ JOB MANAGER ___ DESIGNED BY ___ CHECKED BY ___ DRAFTED BY ___ ESTIMATED BY ___ CHECKED BY ___

Asbestos Sampling Survey

Location:

BIN 1-09357-2

Interstate Route 481 North Bound over Conrail

Prepared for:

New York State

Department of Transportation

PIN 3804.00.101

LaBella Project No. 97132

May, 1998

Table of Contents

Page

I. Project Summary 1

II. Site Description 1

III. Inspection Procedures 1

IV. Results 2

Certification 2

Figures and Table

I. Project Summary

In accordance with conditions of Term Agreement D010010, LaBella Associates, P.C. conducted an asbestos sampling survey of the Interstate Route 481 North Bound Bridge over Conrail. Based on laboratory analyses of bulk samples collected, the following materials were determined to contain asbestos:

BIN 1-09357-2 Interstate Route 481 North Bound over Conrail

Type of Material	Estimated Amount
Sheet Packing	7 Square Meters
Caulking Compound	45.7 Linear Meters

II. Site Description

The Site is located in Onondaga County, New York. For the purpose of this report, the Site consists of the Interstate Route 481 North Bound Bridge over Conrail (See attached FIGURE 1 - Site Location Map).

III. Inspection Procedures

The following procedures were used to obtain the data for this Report:

A. A review of record drawings supplied by Region 3 personnel and a visual inspection of the subject structure were conducted to identify potential visible/accessible sources of asbestos-containing materials. Observations and notes were made to provide a description of the structure, and an estimate of the approximate amount, length, or area of ACM present.

B. Physical or operational constraints which might affect the removal of the ACM were identified and reported.

C. Bulk samples of suspected ACM were collected during the site inspection of the subject structure. Samples were taken from each homogeneous area that may contain ACM.

D. Samples were submitted for analysis. Preliminary PLM analyses of NOB materials were performed by LaBella Laboratories, a NYSDOH approved laboratory, to determine the presence and percentage of asbestos in each sample. TEM analyses of NOB materials, if necessary, were performed by EMSL Analytical, Inc. or New York Testing Laboratories, Inc.

E. Lab results were used to determine the approximate location, type, and amount of the verified ACM.

F. A drawing of the structure at the Site was created, in order to show sample locations and the approximate locations and amounts of confirmed ACM observed in accessible locations.

Only accessible areas were inspected. Inaccessible areas, such as areas within the bridge or the approaches to the bridge were not included in this inspection. No investigation was conducted by LaBella Associates to determine the presence of underground utilities on or in the immediate vicinity of the Site. Actual sample locations are shown in the attached FIGURE 2. Results of bulk sample analyses are tabulated in the attached TABLE.

IV. Results

BIN 1-09357-2 Interstate Route 481 North Bound over Conrail

Sheet Packing

Asbestos-containing sheet packing is located between the tops of the abutments and the deck slab at both ends of the bridge. Most of this material is presently covered by the bridge deck, although the edges of this sheet packing are exposed and visible at various locations.

It is estimated that the total amount of this asbestos-containing sheet packing material on the bridge is approximately 7 square meters. This estimate is based on field measurements taken at the time of the site visit.

The approximate locations of this asbestos-containing sheet packing are shown in FIGURE 2.

Caulking Compound

Asbestos-containing caulking compound is located around some of the guide rail base plates on both parapets on the bridge. It is estimated that the total amount of this caulking compound is approximately 45.7 linear meters. This estimate is based on field measurements taken at the time of the site visit.

The approximate locations of this material are shown in the attached FIGURE 2. Analytical results of bulk samples collected are summarized in the attached TABLE.

Certification

LaBella Associates, P.C. certifies the accuracy of this report, to the best of our knowledge, based on the information collected as described in the Inspection Procedures Section of this investigation.

Figures & Table

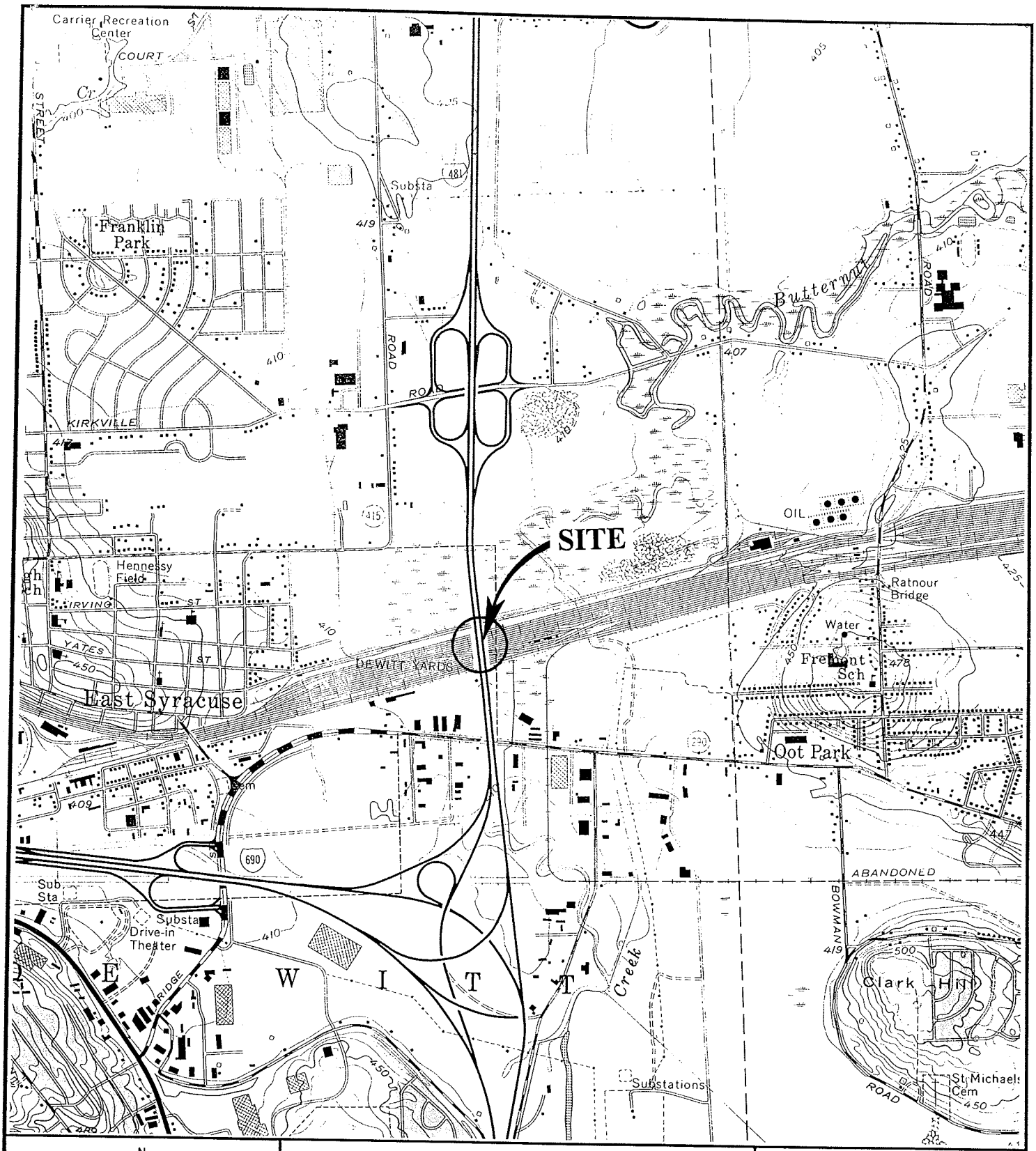

N

SCALE: 1" = 2000'

FIGURE 1
Site Location Map

I-481 NORTH BOUND OVER CONRAIL

BIN 1-09357-2

LABELLA

PROJECT NO. 97132

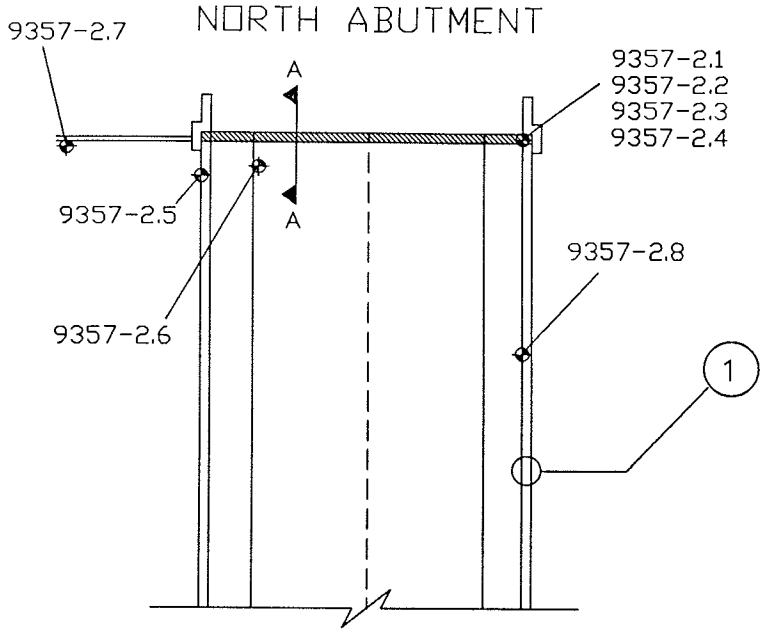

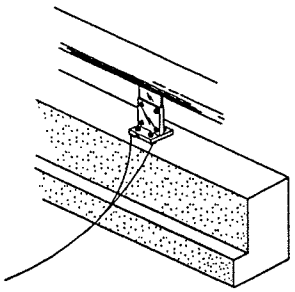

1 TYPICAL RAILING/ PARAPET DETAIL

SPOTTY APPLICATION OF ASBESTOS-CONTAINING CAULKING COMPOUND AROUND SOME GUIDE RAIL BASE PLATES

I-481 NORTH BOUND
BIN 1-09357-2

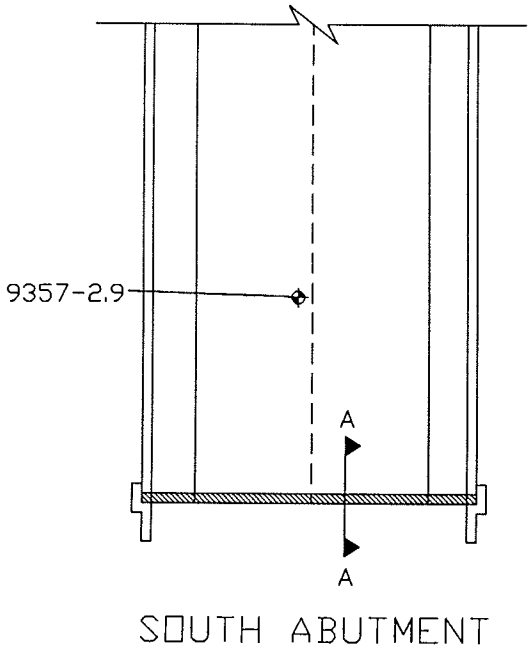

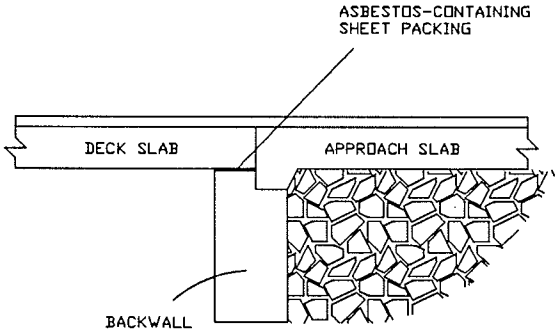

SECTION A-A

LEGEND

- 9357-2.1 SAMPLE LOCATION
- ASBESTOS-CONTAINING SHEET PACKING

NORTH	PROJECT TITLE: ASBESTOS SAMPLING SURVEY 16 BRIDGES, ONONDAGA COUNTY, NEW YORK	PROJECT NO. 97132 PIN 3804.00.101
	FIGURE 2: I-481 NORTH BOUND OVER CONRAIL BIN 1-09357-2 SAMPLE LOCATIONS AND CONFIRMED ACM	NOT TO SCALE DATE: MAY, 1998

Bulk Sample Results Table

Asbestos Sampling Survey
BIN 1-09357-2
Interstate Route 481 North Bound over Conrail
Onondaga County, New York
LaBella Project # 97132
PIN 3804.00.101

Sample #	Sample Location	Type of Material	Results % Asbestos	Amount of Material	Specification Item No.
9357-2.1	**North End of Bridge Between Deck & Abutment**	**Sheet Packing**	**32 % Chrysotile**	**7 Square Meters**	**15202.0627 (M)**
9357-2.2	North End of Bridge Between Deck & Wing Wall	Joint Filler	None Detected	N/A	N/A
9357-2.3	North End of Bridge Beneath Bearing	Bearing Pad	None Detected	N/A	N/A
9357-2.4	North End of Bridge on Abutment	Masonry Coating	None Detected	N/A	N/A
9357-2.5	North End of Bridge, on West I-Beam	Green Paint	None Detected	N/A	N/A
9357-2.6	North End of Bridge, on Inside I-Beam	Green Paint	None Detected	N/A	N/A
9357-2.7	North End of Bridge at Joint & Retaining Wall	Caulking Compound	None Detected	N/A	N/A
9357-2.8	**North End of Bridge at Base of Guide Rail**	**Gray Caulking Compound**	**4 % Chrysotile**	**45.7 Linear Meters**	**15202.0629 (M)**
9357-2.9	North End of Bridge on Ground Below 2nd Span	Green Paint	None Detected	N/A	N/A

Watts
Architects
&Engineers

BIN 1093682

I-81 (Former I-481) NB over I-90

BIN 1093682
Location: I-481 NB over NYS Thruway (I-90)

NYSDOT D031085 PIN 3501.60 - I-81 Viaduct Replacement or New Urban Arterial
City of Syracuse, Onondaga County
Bridge Asbestos Assessment Results

Asbestos containing materials have been identified on this bridge.

ITEM	DESCRIPTION	QUANTITY
210.481201	Removal and Disposal of Miscellaneous ACM (BV14) – Sheet Packing	86 SQ FT
210.481202	Removal and Disposal of Miscellaneous ACM (BV14) – Abutment Caulk (abutment joint)	137 SQ FT

The following summarizes the results of the most recent asbestos survey and record plan review.

Watts Inspection Findings (January 2014)

A bridge inspection was completed on 1/16/2014 and the following suspect ACMs were identified and sampled:

- Green girder paint
- Beige/grey masonry paint
- Compressed asbestos sheet packing
- Grey/brown caulk at top of abutment wall (south side)
- Bearing pad

Laboratory analysis indicated that the sheet packing and abutment caulk sampled by Watts was confirmed positive for asbestos. The other listed materials were not positive for asbestos, per laboratory analytical results.

Review of Historic Plans

The record plans (FISH 70-7, D250094, D258367) were reviewed in support of the field survey. The following suspect ACM was identified:

- Compressed asbestos sheet packing

Watts Architecture & Engineering

BRIDGE ASBESTOS FIELD INSPECTION FORM

2/20/14: finished

BIN Number/Location: 1093682 481 NB over Thruway 90 **Inspection Date:** 1/16/14 (south abutment only)

Project Name: : I-81 Viaduct Replacement or New Urban Arterial **PIN Number:** PIN: 3501.60, D031085

Inspector(s): S. Matthews **Watts Project No:** 13092

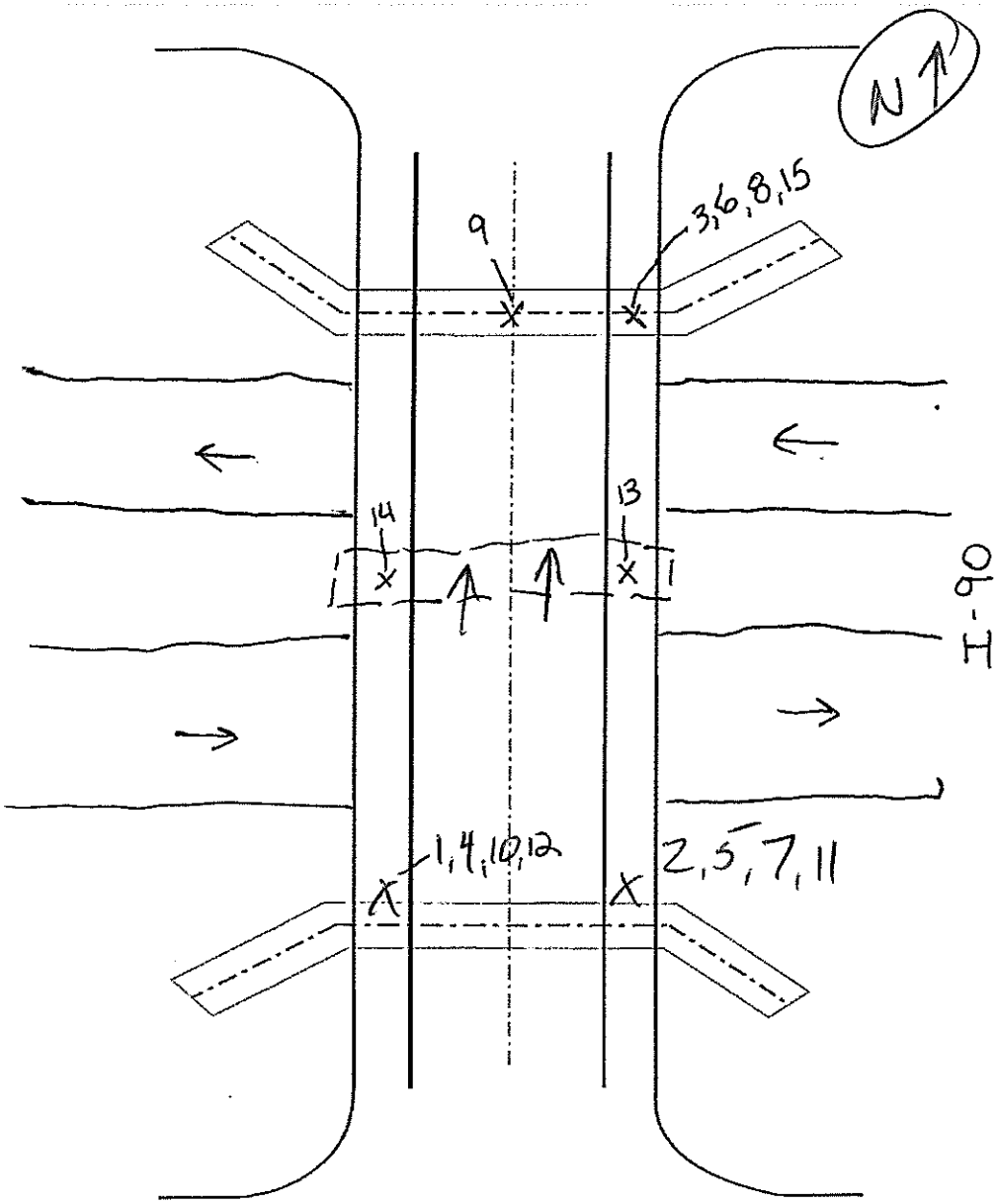

SAMPLE LOCATION PLAN VIEW - N.T.S.

Field Inspection Checklist Item	Investigated	Present	Sampled	
Girder Paint	☐	☐	☒	1-3
Truss Paint	☐	☐	☒	
Abutment Coating (Paint)	☐	☐	☒	4-6
Abutment Caulk	☐	☐	☒	10-12
Abut. Exp. Jt. Filler	☒	☐	☐	
Headwall Sheet Packing	☐	☐	☒	7-9
Bearing Pad	~~☒~~ NA	☐	☒	13-15
Transite Pipe	☒	☐	☐	
Pipe Coating/Wtr. Proof	☒	☐	☐	
Scupper Wtr. Proof	☒	☐	☐	
Dum Dum Paint	☒	☐	☐	
Deck Caulk	☒	☐	☐	
Deck Exp. Jt. Filler	☒	☐	☐	
Approach Sheet Packing	☒	☐	☒	
Railing Paint	☒	☐	☐	
Railing Caulk	☒	☐	☐	
Sidewalk Caulk	☒	☐	☐	
Lighting Pole Caulk	☒	☐	☐	
Masonry Castings	☒	☐	☐	
Miscellaneous Tar	☒	☐	☐	
Utilities	☒	☐	☐	
Other _____	☐	☐	☐	
Other _____	☐	☐	☐	
Other _____	☐	☐	☐	
Other _____	☐	☐	☐	
Other _____	☐	☐	☐	

Notes:
- Caulk on south abutment in joint where sheetpacking is.
- Sheet packing sampled
- One ~~layer~~ type of masonry coating
- Bridge paint is newer
- Topside inspected and no ~~ACM~~ suspect ACM present

EMSL Analytical, Inc.
490 Rowley Road, Depew, NY 14043
Phone/Fax: (716) 651-0030 / (716) 651-0394
http://www.EMSL.com buffalolab@emsl.com

EMSL Order:	141400864
CustomerID:	WATT50A
CustomerPO:	
ProjectID:	

Attn: **Scott Matthews**
Watts Architecture & Engineering
2610 Salina Street
Syracuse, NY 13205

Phone:	(315) 443-8611
Fax:	(315) 443-8605
Received:	03/03/14 10:00 AM
Analysis Date:	3/7/2014
Collected:	1/16/2014

Project: **13092 / I81 Viaduct Replacement or New Urban Arterial: BIN 1093682 (481 NB over Thruway 90)**

Test Report:Asbestos Analysis of Bulk Material

Test	Analyzed Date	Color	Non Asbestos Fibrous	Non Asbestos Non-Fibrous	Asbestos
Sample ID 1093682-1 *141400864-0001*		**Description**	green girder paint		
		Homogeneity	Heterogeneous		
PLM NYS 198.1 Friable					**Not Analyzed**
PLM NYS 198.6 VCM					**Not Analyzed**
PLM NYS 198.6 NOB	3/6/2014	Gray /Green			**Inconclusive: None Detected**
TEM NYS 198.4 NOB	3/7/2014	Gray /Green			**None Detected**
Sample ID 1093682-2 *141400864-0002*		**Description**	green girder paint		
		Homogeneity	Heterogeneous		
PLM NYS 198.1 Friable					**Not Analyzed**
PLM NYS 198.6 VCM					**Not Analyzed**
PLM NYS 198.6 NOB	3/6/2014	Gray /Green			**Inconclusive: None Detected**
TEM NYS 198.4 NOB	3/7/2014	Gray /Green			**None Detected**
Sample ID 1093682-3 *141400864-0003*		**Description**	green girder paint		
		Homogeneity	Heterogeneous		
PLM NYS 198.1 Friable					**Not Analyzed**
PLM NYS 198.6 VCM					**Not Analyzed**
PLM NYS 198.6 NOB	3/6/2014	Gray /Green			**Inconclusive: None Detected**
TEM NYS 198.4 NOB	3/7/2014	Gray /Green			**None Detected**
Sample ID 1093682-4 *141400864-0004*		**Description**	beige/gray masonry paint		
		Homogeneity	Homogeneous		
PLM NYS 198.1 Friable					**Not Analyzed**
PLM NYS 198.6 VCM					**Not Analyzed**
PLM NYS 198.6 NOB	3/6/2014	Gray			**Inconclusive: None Detected**
TEM NYS 198.4 NOB	3/7/2014	Gray			**None Detected**
Sample ID 1093682-5 *141400864-0005*		**Description**	beige/gray masonry paint		
		Homogeneity	Homogeneous		
PLM NYS 198.1 Friable					**Not Analyzed**
PLM NYS 198.6 VCM					**Not Analyzed**
PLM NYS 198.6 NOB	3/6/2014	Gray			**Inconclusive: None Detected**
TEM NYS 198.4 NOB	3/7/2014	Gray			**None Detected**

Initial Report From 03/08/2014 14:30:54

EMSL Analytical, Inc.
490 Rowley Road, Depew, NY 14043
Phone/Fax: (716) 651-0030 / (716) 651-0394
http://www.EMSL.com buffalolab@emsl.com

EMSL Order:	141400864
CustomerID:	WATT50A
CustomerPO:	
ProjectID:	

Test Report:Asbestos Analysis of Bulk Material

Test		Color	Fibrous	Non-Fibrous	Asbestos
			Non Asbestos		
Sample ID 1093682-6 *141400864-0006*		**Description**	beige/gray masonry paint		
		Homogeneity	Heterogeneous		
PLM NYS 198.1 Friable					**Not Analyzed**
PLM NYS 198.6 VCM					**Not Analyzed**
PLM NYS 198.6 NOB	3/6/2014	Gray			**Inconclusive: None Detected**
TEM NYS 198.4 NOB	3/7/2014	Gray			**None Detected**
Sample ID 1093682-7 *141400864-0007*		**Description**	sheet packing		
		Homogeneity	Homogeneous		
PLM NYS 198.1 Friable					**Not Analyzed**
PLM NYS 198.6 VCM					**Not Analyzed**
PLM NYS 198.6 NOB	3/6/2014	Gray			**32.3% Chrysotile**
					32.3% Total
TEM NYS 198.4 NOB	3/7/2014				**Not Analyzed**
Sample ID 1093682-8 *141400864-0008*		**Description**	sheet packing		
		Homogeneity	Homogeneous		
PLM NYS 198.1 Friable					**Not Analyzed**
PLM NYS 198.6 VCM					**Not Analyzed**
PLM NYS 198.6 NOB	3/6/2014	Black			**24.2% Chrysotile**
					24.2% Total
TEM NYS 198.4 NOB	3/7/2014				**Not Analyzed**
Sample ID 1093682-9 *141400864-0009*		**Description**	sheet packing		
		Homogeneity	Homogeneous		
PLM NYS 198.1 Friable					**Not Analyzed**
PLM NYS 198.6 VCM					**Not Analyzed**
PLM NYS 198.6 NOB	3/6/2014	Black			**26.6% Chrysotile**
					26.6% Total
TEM NYS 198.4 NOB	3/7/2014				**Not Analyzed**
Sample ID 1093682-10 *141400864-0010*		**Description**	brown/gray caulk at top of abutment wall		
		Homogeneity	Homogeneous		
PLM NYS 198.1 Friable					**Not Analyzed**
PLM NYS 198.6 VCM					**Not Analyzed**
PLM NYS 198.6 NOB	3/6/2014	Brown			**Inconclusive: None Detected**
TEM NYS 198.4 NOB	3/7/2014	Brown			**1.3% Chrysotile**
					1.3% Total

Initial Report From 03/08/2014 14:30:54

EMSL Analytical, Inc.
490 Rowley Road, Depew, NY 14043
Phone/Fax: (716) 651-0030 / (716) 651-0394
http://www.EMSL.com buffalolab@emsl.com

EMSL Order:	141400864
CustomerID:	WATT50A
CustomerPO:	
ProjectID:	

Test Report:Asbestos Analysis of Bulk Material

Test		Color	Fibrous	Non Asbestos Non-Fibrous	Asbestos
Sample ID 1093682-11 *141400864-0011*		**Description**	brown/gray caulk at top of abutment wall		
		Homogeneity	Homogeneous		
PLM NYS 198.1 Friable					**Not Analyzed**
PLM NYS 198.6 VCM					**Not Analyzed**
PLM NYS 198.6 NOB	3/6/2014	Brown			**Inconclusive: None Detected**
TEM NYS 198.4 NOB	3/7/2014	Brown			**<1% Chrysotile** **<1% Total**
Sample ID 1093682-12 *141400864-0012*		**Description**	brown/gray caulk at top of abutment wall		
		Homogeneity	Homogeneous		
PLM NYS 198.1 Friable					**Not Analyzed**
PLM NYS 198.6 VCM					**Not Analyzed**
PLM NYS 198.6 NOB	3/6/2014	Tan			**Inconclusive: None Detected**
TEM NYS 198.4 NOB	3/7/2014	Tan			**2.4% Chrysotile** **2.4% Total**
Sample ID 1093682-13 *141400864-0013*		**Description**	bearing pad		
		Homogeneity	Heterogeneous		
PLM NYS 198.1 Friable					**Not Analyzed**
PLM NYS 198.6 VCM					**Not Analyzed**
PLM NYS 198.6 NOB	3/6/2014	Black /Green			**Inconclusive: None Detected**
TEM NYS 198.4 NOB	3/7/2014	Black /Green			**None Detected**
Sample ID 1093682-14 *141400864-0014*		**Description**	bearing pad		
		Homogeneity	Heterogeneous		
PLM NYS 198.1 Friable					**Not Analyzed**
PLM NYS 198.6 VCM					**Not Analyzed**
PLM NYS 198.6 NOB	3/6/2014	Black /Green			**Inconclusive: None Detected**
TEM NYS 198.4 NOB	3/7/2014	Black /Green			**None Detected**
Sample ID 1093682-15 *141400864-0015*		**Description**	bearing pad		
		Homogeneity	Heterogeneous		
PLM NYS 198.1 Friable					**Not Analyzed**
PLM NYS 198.6 VCM					**Not Analyzed**
PLM NYS 198.6 NOB	3/6/2014	Tan /Green			**Inconclusive: None Detected**
TEM NYS 198.4 NOB	3/7/2014	Tan /Green			**None Detected**

Initial Report From 03/08/2014 14:30:54

EMSL Analytical, Inc.
490 Rowley Road, Depew, NY 14043
Phone/Fax: (716) 651-0030 / (716) 651-0394
http://www.EMSL.com buffalolab@emsl.com

EMSL Order:	141400864
CustomerID:	WATT50A
CustomerPO:	
ProjectID:	

Test Report:Asbestos Analysis of Bulk Material

		Non Asbestos		
Test	**Color**	**Fibrous**	**Non-Fibrous**	**Asbestos**

Analyst(s)
Rhonda McGee

Rhonda McGee, Laboratory Manager
or other approved signatory

NOB = Non Friable Organically Bound N/A = Not Applicable VCM = Vermiculite Containing Material

-In New York State, TEM is currently the only method that can be used to determine if NOB materials can be considered or treated as non-asbestos containing.
All samples examined for the presence of vermiculite when analyzed via NYS 198.1.
-NYS Guidelines for Vermiculite containing samples are available at http://www.wadsworth.org/labcert/elapcert/forms/VermiculiteInterimGuidance_Rev070913.pdf
EMSL maintains liability limited to cost of analysis. This report relates only to the samples reported above and may not be reproduced, except in full, without written approval by EMSL. EMSL bears no responsibility for sample collection activities or analytical method limitations. Interpretation and use of test results are the responsibility of the client. Samples were received in good condition unless otherwise noted.
This report must not be used by the client to claim product certification, approval, or endorsement by NVLAP, NIST, or any agency of the federal government. This report may contain data that is not covered by the NVLAP accreditation.

Samples analyzed by EMSL Analytical, Inc. Depew, NY NYS ELAP 11606

Initial Report From 03/08/2014 14:30:54

WATTS ARCHITECTURE & ENGINEERING
ASBESTOS BULK SAMPLE CHAIN-OF-CUSTODY

141400864

Page: 1 of 2
Date: 1/14/14

Client: Parsons
Project: 181 Viaduct Replacement or New Urban Arterial
Building / Location: BIN 1093682 481 NB over Thruway 90
Contact: Scott Matthews at (315) 443-8611
Email Preliminary Results to: smatthews@watts-ae.com
Mail Invoice to: Accounts Payable, Watts Architecture & Engineering, 95 Perry Street, Buffalo, NY 14203

Watts Project No.: 13092
Turnaround Requested: 3 Hr. ___ 48 Hr. ___
Analysis Requested: 6 Hr. ___ 72 Hr. ___
PLM X TEM X 12 Hr. ___ X ~~5 Day~~
24 Hr. ___ 6-10 Day
7 day asper Matt. 3/3/14

Mail Report to: Scott Matthews, Watts Architecture & Engineering, 2610 S Salina Street, Syracuse, NY 13210

Sample Number	Material Description	Sample Location	Laboratory Results PLM	Laboratory Results TEM
~~1093682~~ BM-1	Green girder paint	Southwest corner		
1093682-2	" " "	Southeast corner		
3	" " "	Northeast corner		
4	Beige/gray masonry paint	Southwest corner		
5	" " "	Southeast corner		
6	" " "	Northeast corner		
7	Sheet packing	Southeast corner		
8	" "	Northeast corner		
9	" "	North abutment - middle		
10	Brown/Grey caulk at top of abutment wall	Southwest corner		
11	" " "	Southeast corner		
12	" " "	Southwest corner		

Sampled By: Scott Matthews Date: 1-16-14 Received By: RECEIVED MAR 03 2014 BY: Date: FF
Relinquished By: Scott Matthews to FedEx Date: 2-28-14 Received By: Date: 10Am
Comments:

C:\Documents and Settings\smatthews\Desktop\BulkForm.xls
12/2/2013

OrderID: 141400415

WATTS ARCHITECTURE & ENGINEERING
ASBESTOS BULK SAMPLE CHAIN-OF-CUSTODY

141400864

Page: 2 of 2
Date: 1/16/14

Client: Parsons
Project: 181 Viaduct Replacement or New Urban Arterial
Building / Location: BIN 1093682 481 NB over 90
Contact: Scott Matthews at (315) 443-8611
Email Preliminary Results to: smatthews@watts-ae.com
Mail Invoice to: Accounts Payable, Watts Architecture & Engineering, 95 Perry Street, Buffalo, NY 14203

Watts Project No.: 13092
Turnaround Requested: ___ 3 Hr. ___ 48 Hr.
Analysis Requested: ___ 6 Hr. ___ 72 Hr.
PLM X TEM X 12 Hr. X ~~5 Day~~
24 Hr. ___ 6-10 Day
7 day auger

Mail Report to: Scott Matthews, Watts Architecture & Engineering, 2610 S Salina Street, Syracuse, NY 13210

Matt 3/3/14

Sample Number	Material Description	Sample Location	Laboratory Results PLM	Laboratory Results TEM
1093682-13	Bearing Pad	Middle pier - East side		
14	" "	Middle pier - west side		
15	" "	Northeast corner		

Sampled By: Scott Matthews Date: 1-16-14 Received By: RECEIVED Date: FX
Relinquished By: Scott Matthews to FedEx Date: 2-28-14 Received By: MAR 03 2014 Date: 10 Am
Comments: BY:

C:\Documents and Settings\smatthews\Desktop\BulkForm.xls
12/2/2013

OrderID: 141400853

Watts
Architects
&Engineers

BIN 1093682 Inspection Photos

I-81 (Former I-481) NB over I-90

Photo 1

Photo 2

Photo 3

Photo 4

Photo 5

Photo 6

1093682

F.I.S.H. 70-7

FED. RD. REG. NO.	STATE	FEDERAL AID PROJECT NO.	SHEET NO.	TOT SHTS
1	NEW YORK	I-481-2(116)	240R	30

INTERSTATE ROUTE CONNECTION 570

BUTTERNUT INTERCHANGE - COLLAMER

ONONDAGA COUNTY

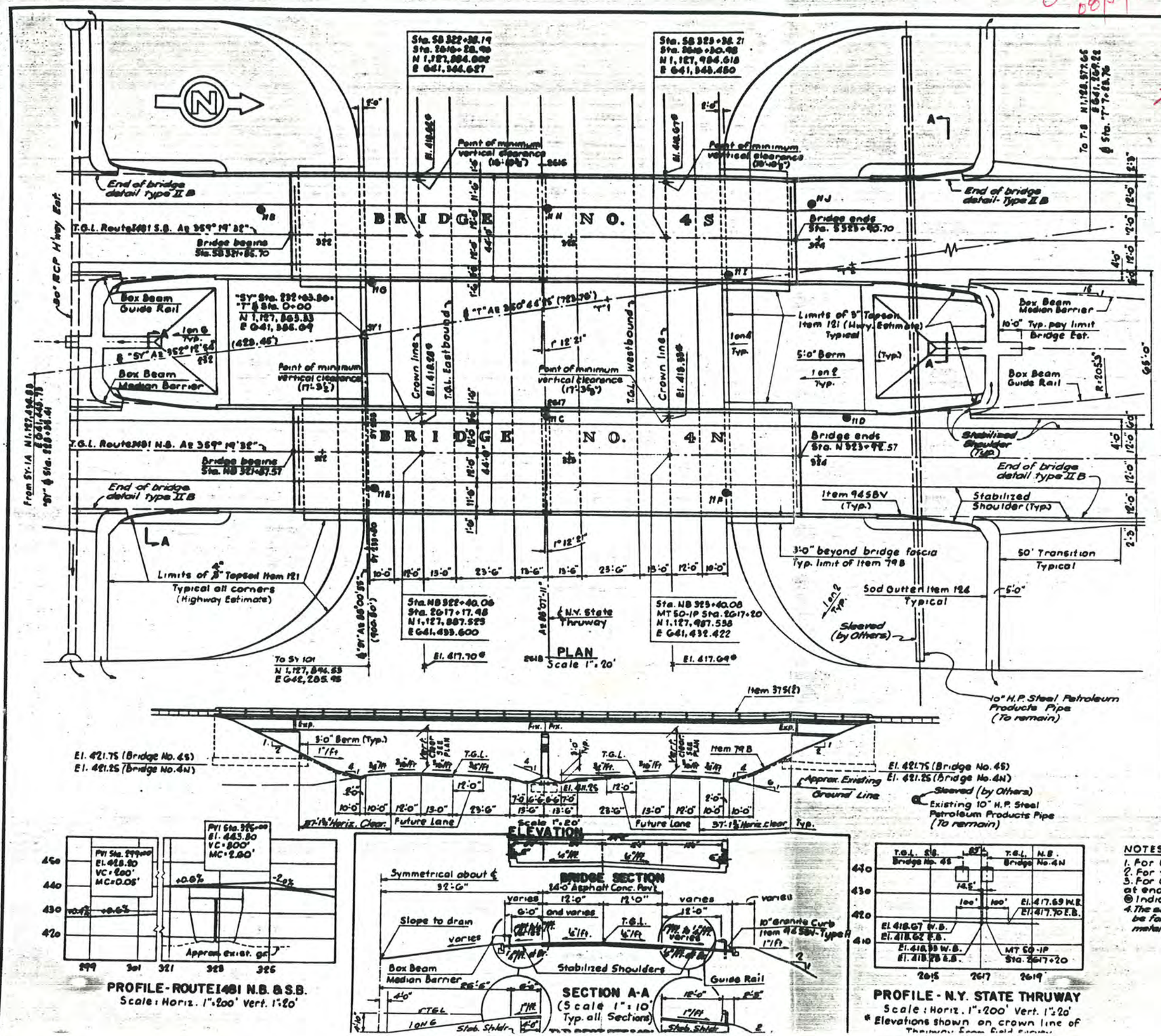

ESTIMATE OF QUANTITIES

ITEM	DESCRIPTION	UNIT	BRIDGE NO. 4S NEAT	BRIDGE NO. 4S PROP'L		BRIDGE NO. 4N NEAT	BRIDGE NO. 4N PROP'L	
2EF-B	Selected Granular Fill	C.Y.	3435	3435		3520	3520	
2VJ-D	Selected Fill (Bridge Foundation)	C.Y.	4950	4950		4950	4950	
2UF	Underdrain Filter	C.Y.	12	15		12	15	
5B	Structure Excavation	C.Y.	333	335		333	335	
11H-6	Perforated Corr. Metal Underdrain-6" Dia.	L.F.	220	220		220	220	
18	Class A-Concrete for Structures	C.Y.	57	60		57	60	
18MA	Class A-Conc. for Struct. (Mono. Bridge Slab)	S.F.	8,952	8,960		8,952	8,960	
20	Class B-Concrete for Structures	C.Y.	560	560		571	575	
24A	Bagged Screened Aggregate	C.Y.	83	85		84	85	
28	Bar Reinforcement for Structures	Lb.	117,435	117,435		117,675	117,675	
28B	Stud Shear Connectors	Ea.	2,420	2,420		2,420	2,420	
29	Structural Steel	Lb.	242,880	242,880		242,880	242,880	
375(2)	Steel Bridge Railing (2 Rail)	L.F.	538	540		538	540	
61	Bituminous Material	Gal.	132	135		136	140	
79B	Concrete Block Paving	S.Y.	322	325		322	325	
945BV	Stone Curb (Bridge Types) Granite	L.F.	701	705		701	705	
124	Sodding	S.Y.	121	125		121	125	
963I	Epoxy Protective Coating for Conc.	S.F.	931	935		931	935	
1WPS	Watering Plants and Sod	MGal.	2.4	4.0		2.4	4.0	
837XS	Temporary Sheet Piling	S.F.	928	930		928	930	

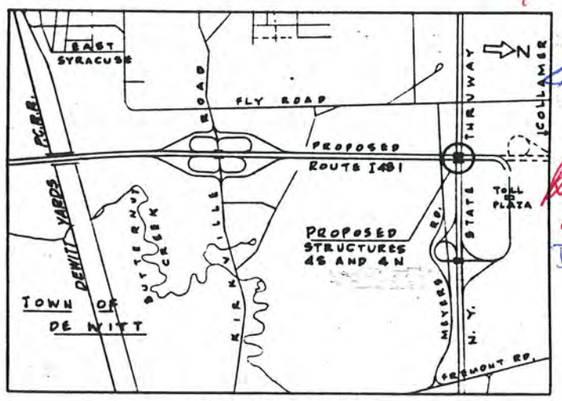

LOCATION PLAN
Scale 1" = 2000'

NOTES

1. For General Notes see Sheet No. 124
2. For foundation treatment see Sht. No. 241
3. For Curbing and Drainage Details at ends of bridge see Sheet No. 127
4. ⊙ Indicates location of borings.
5. The structural slab on this structure shall be formed with permanent corrugated metal forms for concrete decks.

As Built Revision
Change in topsoil depth
BIN 1093681 & 1093682

F.A.I. 481

BRIDGE NO. 4S & 4N
I 481 OVER N.Y. STATE THRUWAY
GENERAL PLAN

DESIGNED NO.	SCALE	DATE	SHEET NO.
9093-03	As shown	8/1/70	240

1093687

F.I.S.H. 70-7

FED. RD. REG. NO.	STATE	PROJECT NO.	SHEET NO.	TOTAL SHEETS
1	NEW YORK	I-481-2(11)6	241	409

INTERSTATE ROUTE CONNECTION 570

BUTTERNUT INTERCHANGE-COLLAMER

ONONDAGA COUNTY

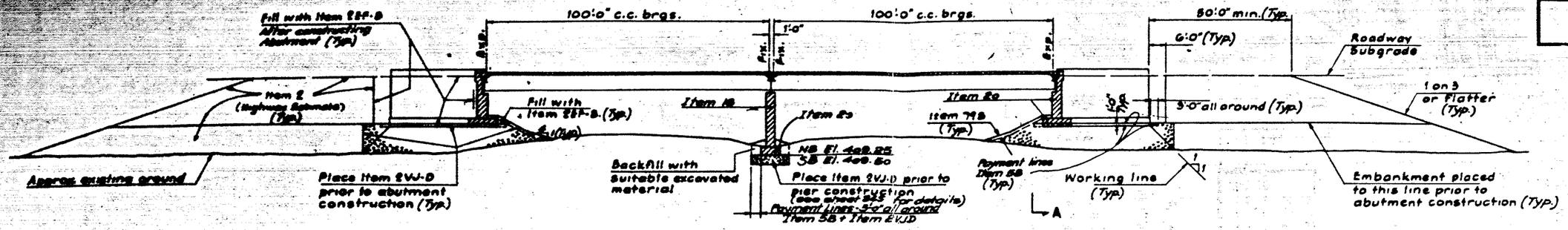

LONGITUDINAL SECTION

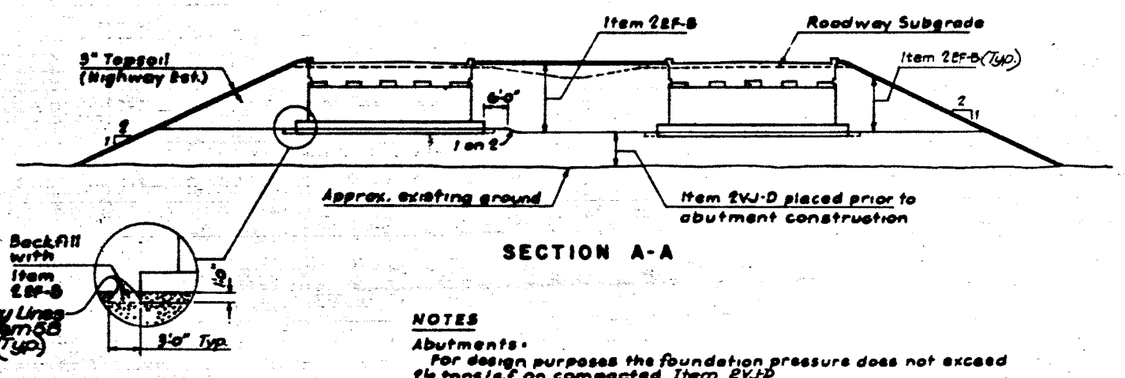

SECTION A-A

NOTES

Abutments:

For design purposes the foundation pressure does not exceed 2½ tons/s.f. on compacted Item 2VJ-D

All fill shall be completed to subgrade and allowed to settle to the satisfaction of the Deputy Chief Engineer (Design) prior to pouring pedestals, header and safety walks to the elevations shown on the Plans.

Piers:

For design purposes the foundation pressure does not exceed 2 tons/s.f. on compacted Item 2VJ-D

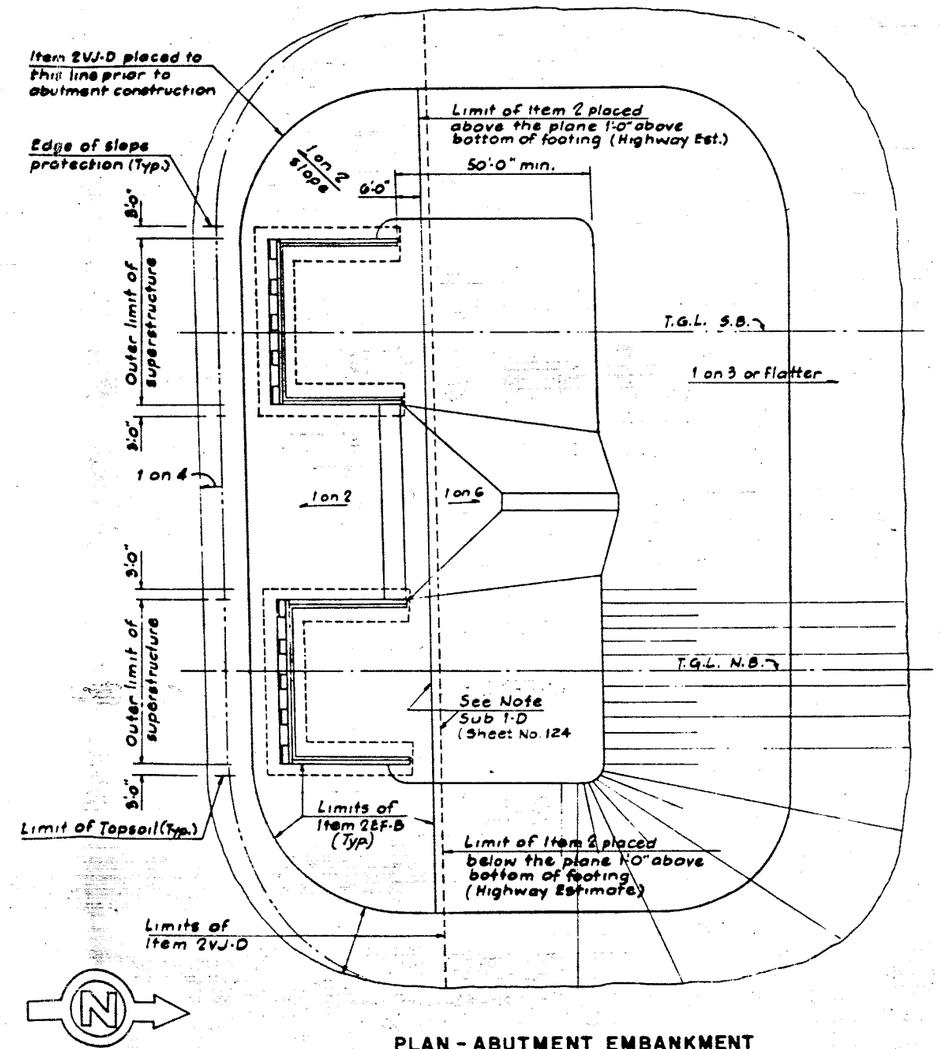

PLAN - ABUTMENT EMBANKMENT

F.A.I. 481

BRIDGES NO. 4S & 4N
I 481 OVER N.Y. STATE THRUWAY
DETAILS

DRAWING NO.	SCALE	DATE	SHEET NO.
9093-03	1" = 20'	8/25/70	241

LOCKWOOD, KESSLER & BARTLETT, INC.
CONSULTING ENGINEERS - SYOSSET, NEW YORK

1093682

F.I.S.H. 70

1		I-481-2(116)	242

INTERSTATE ROUTE CONNECTION ST

BUTTERNUT INTERCHANGE - COLLAME
ONONDAGA COUNTY

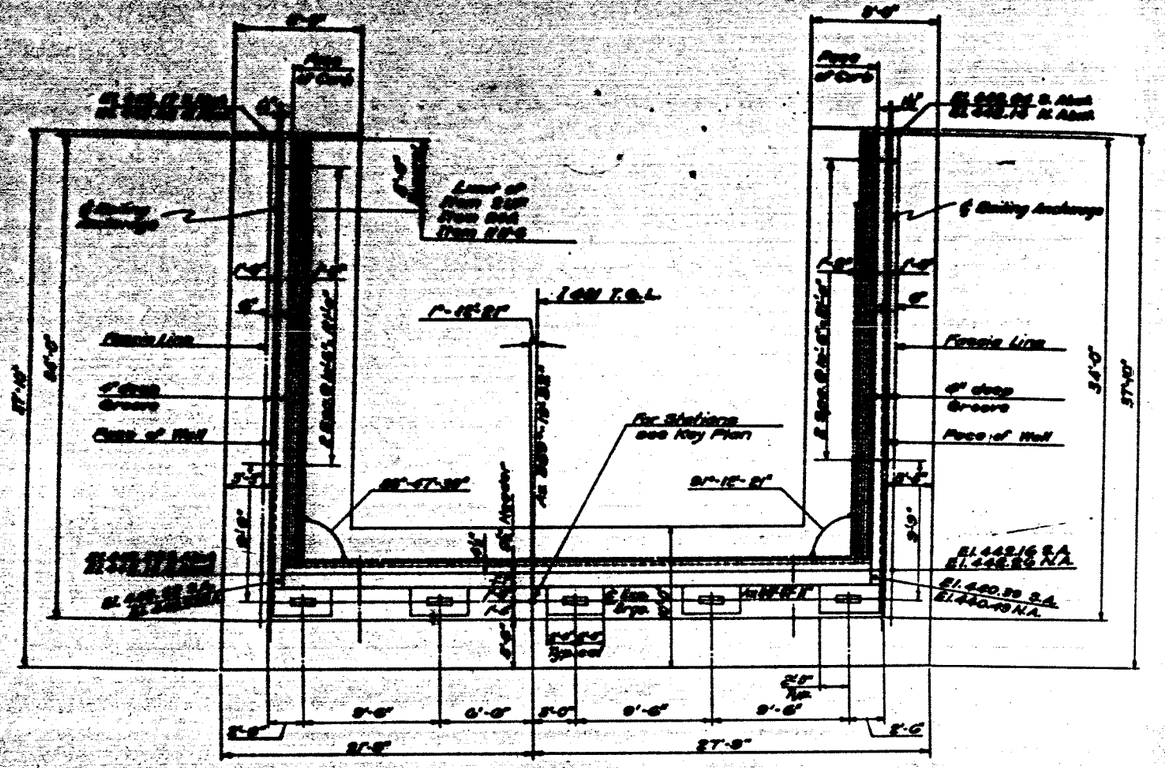

PLAN
Scale: 1/8" = 1'-0"

NOTE:
South Abutment as shown
North Abutment similar

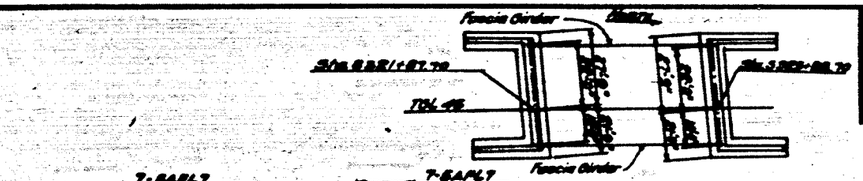

KEY PLAN
No Scale

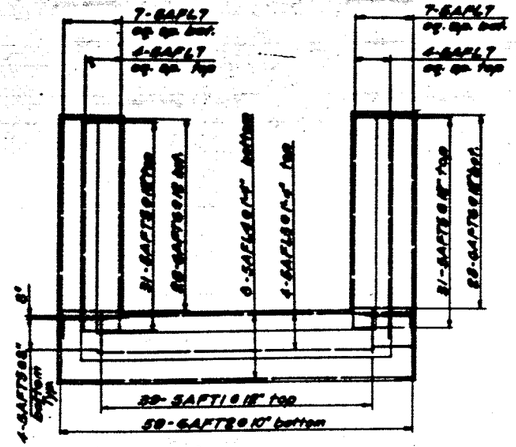

FOOTING REINFORCEMENT
Scale: 1/32" = 1'-0"

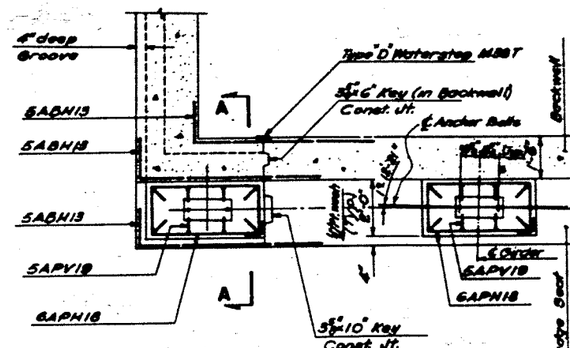

PLAN-PEDESTALS
Scale: 1/8" = 1'-0"

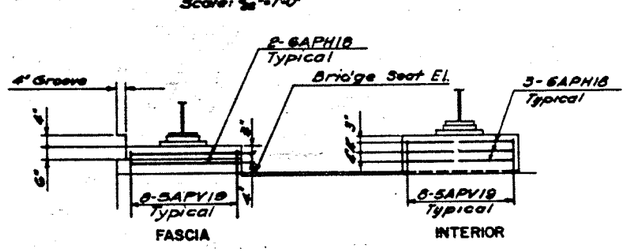

ELEVATION-PEDESTALS
Not to scale

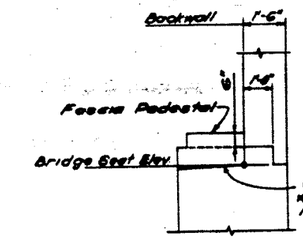

SECTION A-A
Scale: 1/8" = 1'-0"

ABUT. / ELEV.	NORTH	SOUTH
A	435.10	435.25
B	435.30	435.45
C	435.50	435.53
D	435.42	435.32
E	435.23	435.12
F	441.28	441.43
G	441.40	441.30
H	434.60	434.75
J	434.73	434.62

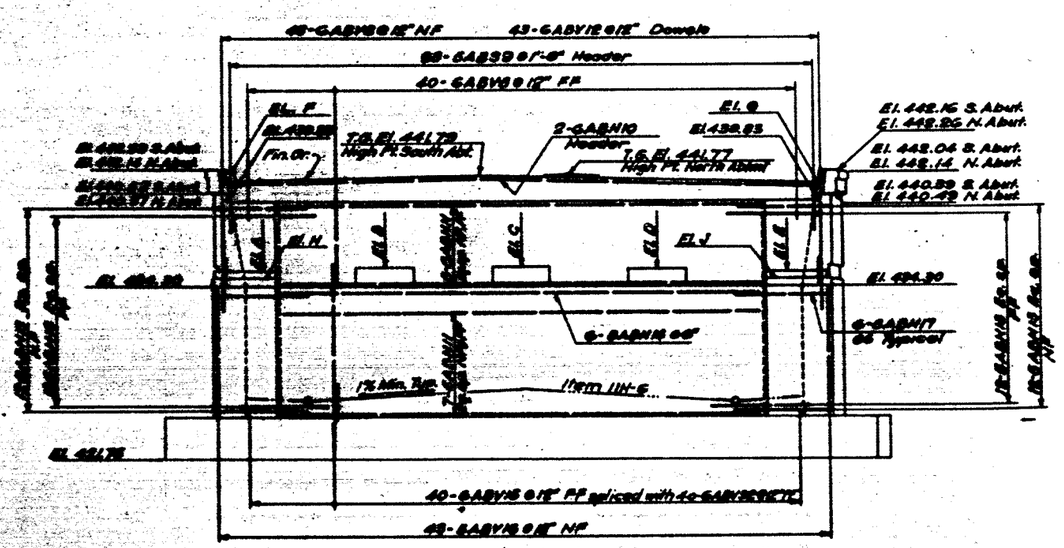

ELEVATION
Scale: 1/8" = 1'-0"

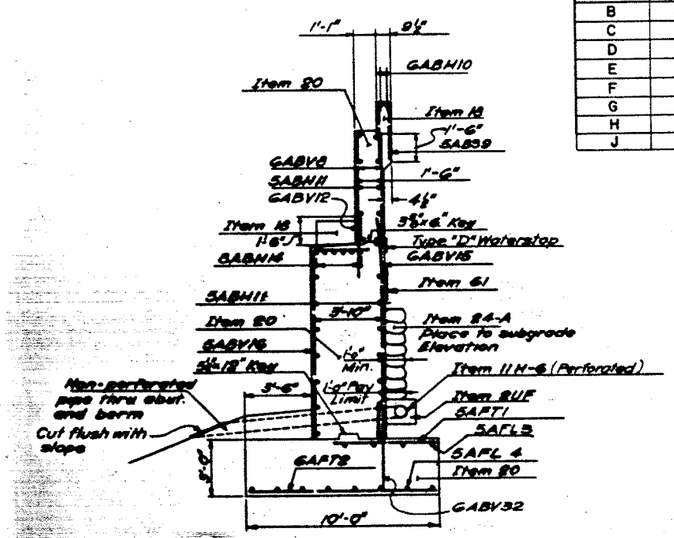

TYPICAL SECTION
Scale: 1/2" = 1'-0"

NOTES:
1. Anchor bolts for bearings shall be roughened or swedged bolts, 1'-2½" lo and set 10" into concrete.
2. For Excavation and Backfill details Sheet No. 241
3. For Backwall and Waterstop details Sheet No. 125
4. For Expansion Bearing detail see Sht. 1
5. For Rail Post spacing see Sheet No. 24

F.A.I. 481

BRIDGE NO. 4S
I 481 OVER N.Y. STATE THR
ABUTMENTS

9065-03	As Shown	4/2/70

LOCKWOOD, KESSLER & BARTLE
CONSULTING ENGINEERS — SYRACUSE, N

1073682

F.I.S.H. 7

FED. RD. DIST. NO.	STATE	FEDERAL AID PROJECT NO.	SHEET NO.
1	NEW YORK	I-481-2(13)	243

INTERSTATE ROUTE CONNECTION ST

BUTTERNUT INTERCHANGE - COLLAME
ONONDAGA COUNTY

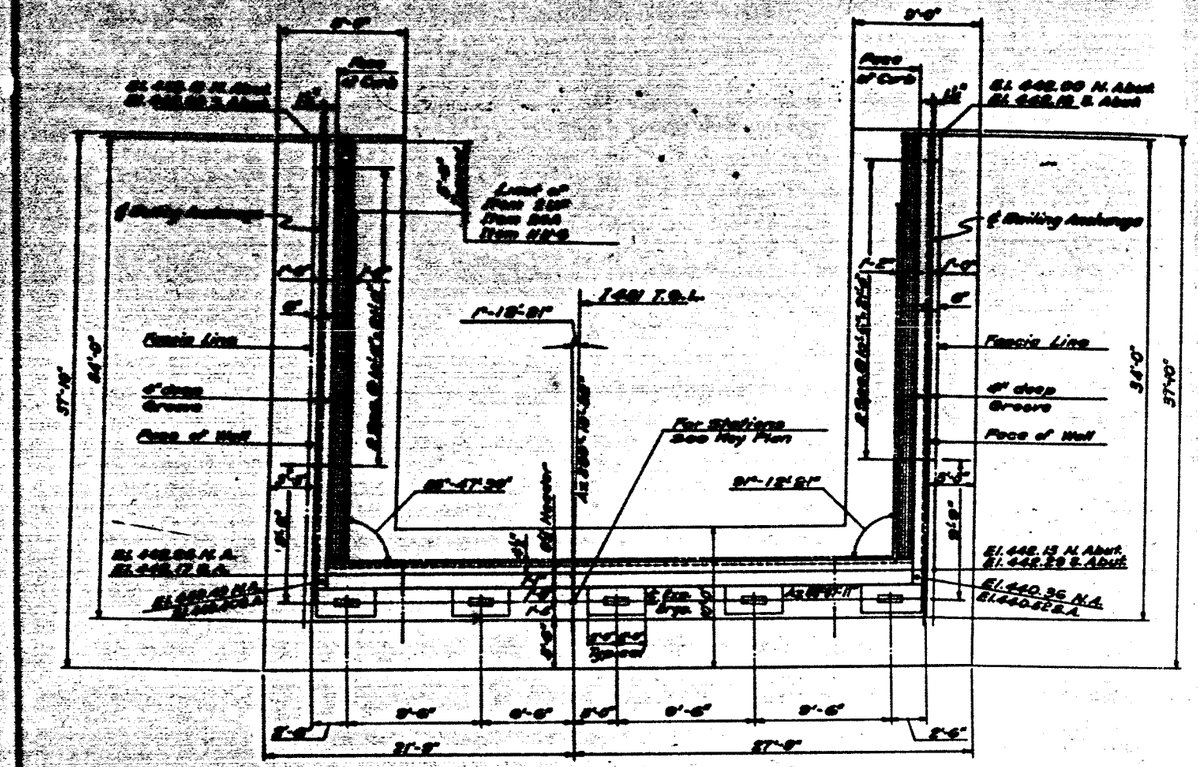

PLAN
Scale: 1/8" = 1'-0"

NOTE:
North Abutment as shown
South Abutment similar

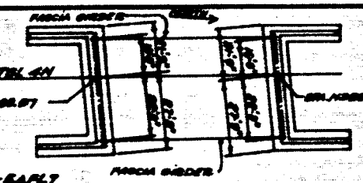

KEY PLAN
No Scale

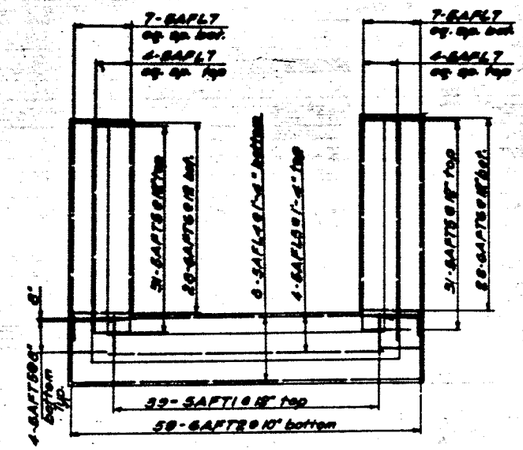

FOOTING REINFORCEMENT
Scale: 1/8" = 1'-0"

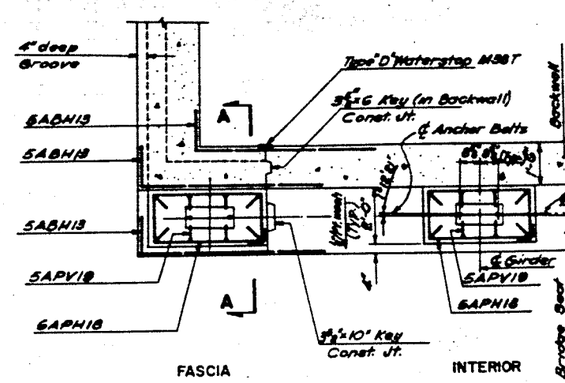

PLAN-PEDESTALS
Scale: 1/8" = 1'-0"

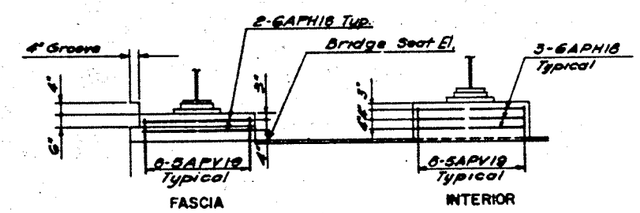

ELEVATION-PEDESTALS
Not to scale

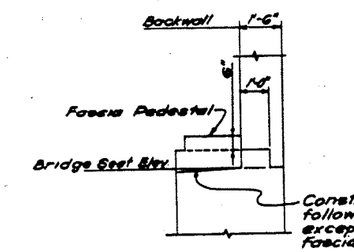

SECTION A-A
Scale: 1/8" = 1'-0"

ABUT. / ELEV.	NORTH	SOUTH
A	435.22	435.13
B	435.42	435.33
C	435.49	435.53
D	435.29	435.46
E	435.09	435.26
F	441.40	441.31
G	441.27	441.43
H	434.72	434.63
J	434.59	434.76

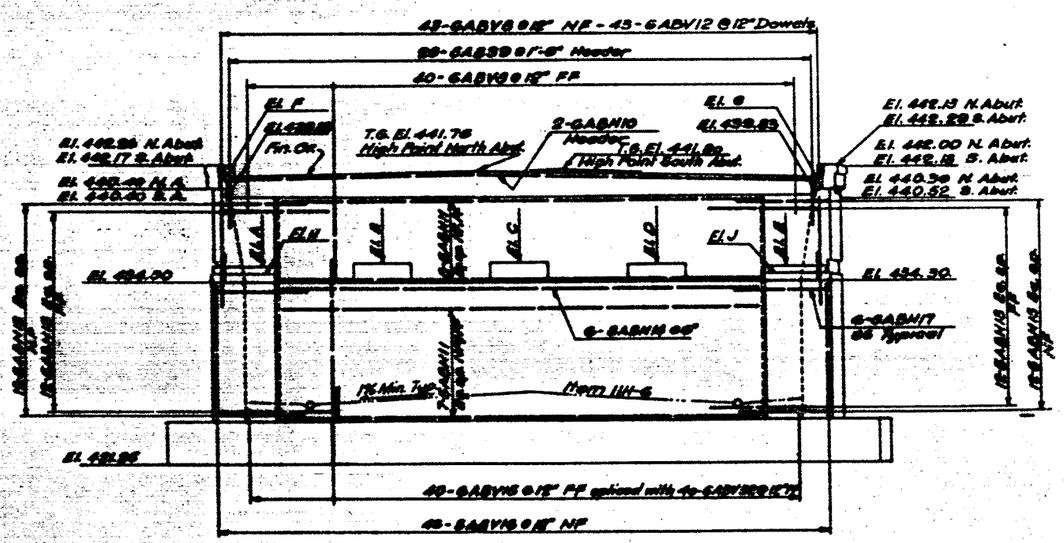

ELEVATION
Scale: 1/8" = 1'-0"

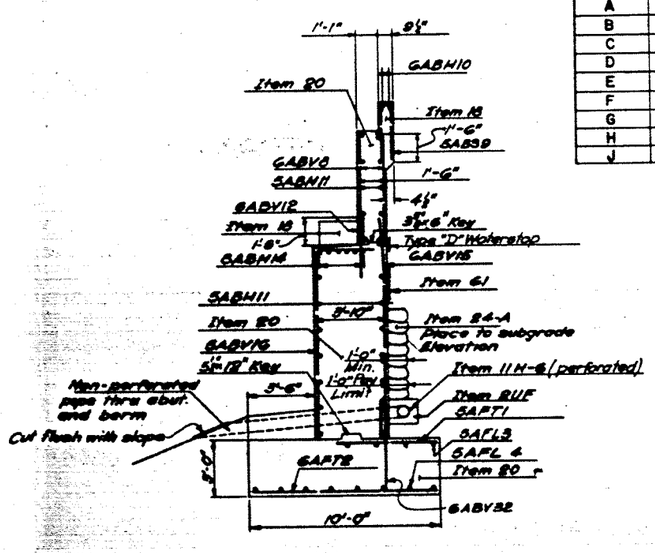

TYPICAL SECTION (North Abutment shown)
Scale: 1/4" = 1'-0"

NOTES:
1. Anchor bolts for bearings shall be roughened or swedged bolts, 1'-2 1/2" l and set 10" into concrete.
2. For Excavation and Backfill details Sheet No. 241
3. For Backwall and waterstop details Sheet No. 125
4. For Expansion Bearing detail see Sht. 24
5. For Rail Post spacing see Sheet No. 24

F.A.I. 481

BRIDGE NO. 4N
I 481 OVER N.Y. STATE TH
ABUTMENTS

DRAWING NO.	SCALE	DATE
9089-09	As Shown	6/9/70

LOCKWOOD, KESSLER & BARTLE
CONSULTING ENGINEERS - SYRACUSE,

F.I.S.H. 70-1

		I-690-3(28)	244	80
1				

INTERSTATE ROUTE 690 CONNECTION 370

BUTTERNUT INTERCHANGE - COLLAMER
ONONDAGA COUNTY

1093682

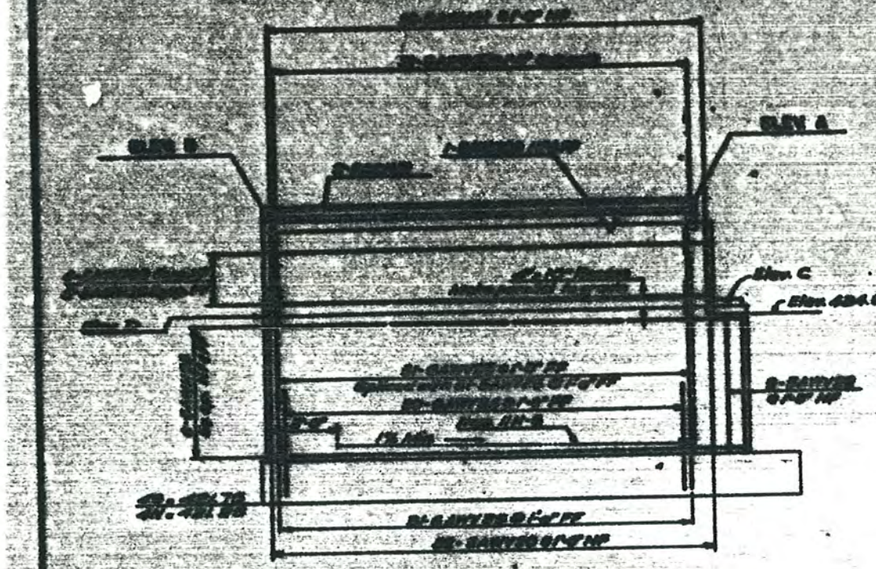

TYPICAL WINGWALL ELEVATION
Scale: 1/8" = 1'-0"

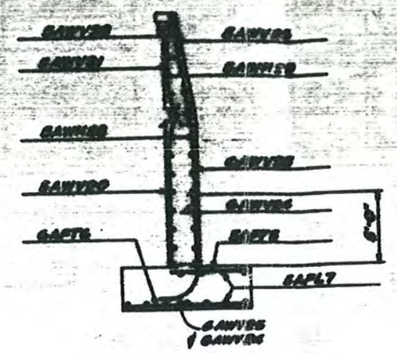

TYPICAL SECTION
Scale: 1/8" = 1'-0"

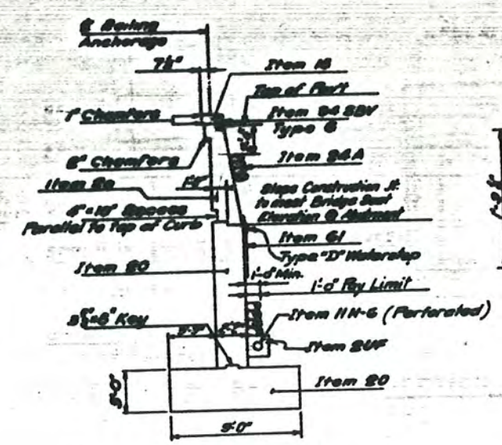

TYPICAL SECTION
Scale: 1/8" = 1'-0"

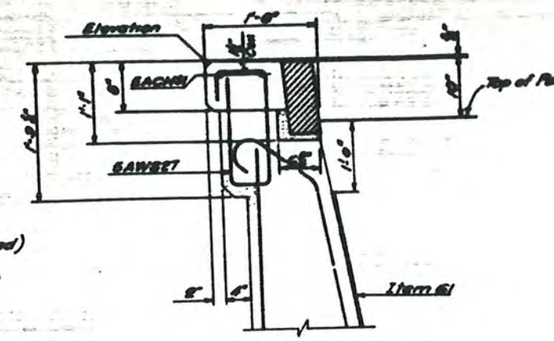

DETAIL
Scale: 1" = 1'-0"

	4S		4N	
	BAR A	BAR B	BAR A	BAR B
[illegible]	[illegible]	[illegible]	[illegible]	[illegible]
[illegible]	[illegible]	[illegible]	[illegible]	[illegible]
[illegible]	[illegible]	[illegible]	[illegible]	[illegible]
[illegible]	[illegible]	[illegible]	[illegible]	[illegible]
	BAR A G	BAR B	BAR A G	BAR B
[illegible]	[illegible]	[illegible]	[illegible]	[illegible]
[illegible]	[illegible]	[illegible]	[illegible]	[illegible]
[illegible]	[illegible]	[illegible]	[illegible]	[illegible]
[illegible]	[illegible]	[illegible]	[illegible]	[illegible]

F.A.I. 481

BRIDGES NO. 4S & 4N
I 481 OVER N.Y. STATE THRUW
WINGWALLS

2093-93	As Shown	6/5/70	[illegible]

LOCKWOOD, KESSLER & BARTLETT, [illegible]
CONSULTING ENGINEERS – SYOSSET, NEW [illegible]

1093682

F.I.S.H. 70

FED. RD. REGN. NO.	STATE	PROJECT NO.	SHEET NO.
1	NEW YORK	I-481-2(116)	245

INTERSTATE ROUTE CONNECTION 570

BUTTERNUT INTERCHANGE-COLLAMER

ONONDAGA COUNTY

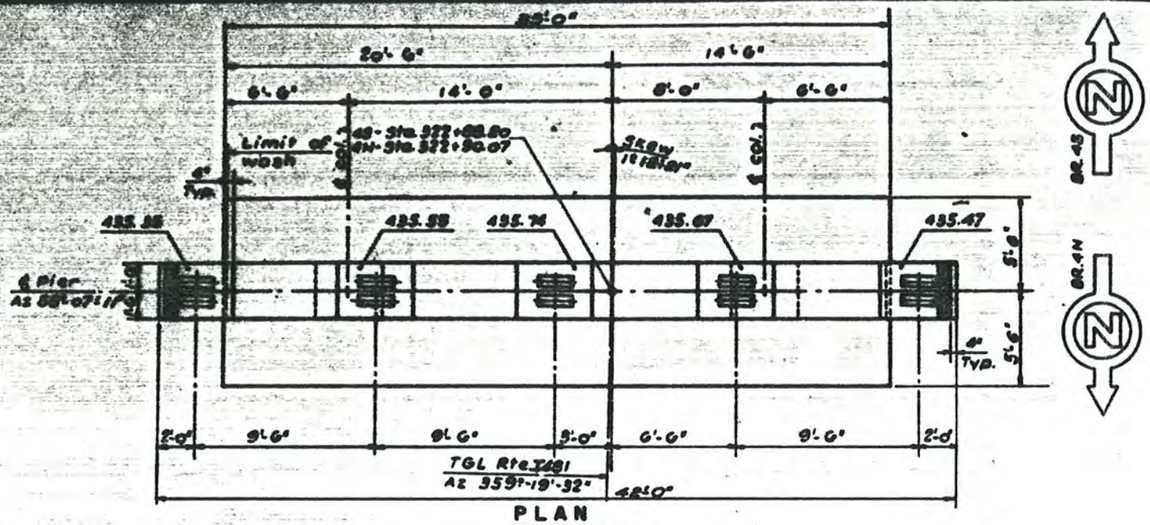

PLAN
Scale 1/4" = 1'-0"

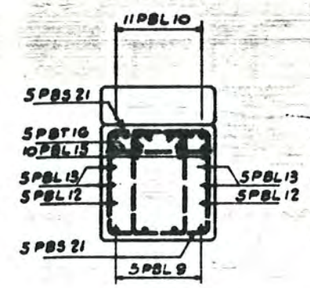

SECTION A-A
Scale 1/2" = 1'-0"

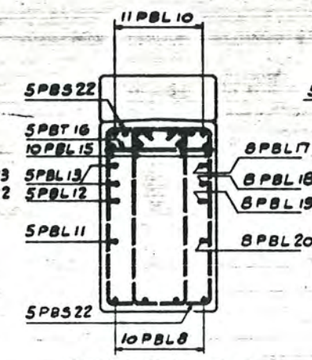

SECTION B-B
Scale 1/2" = 1'-0"

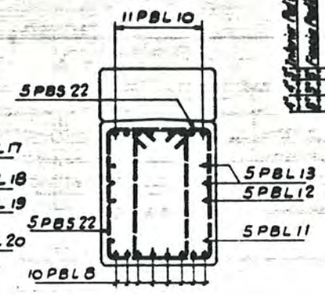

SECTION C-C
Scale 1/2" = 1'-0"

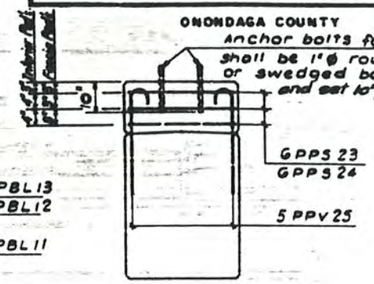

DETAIL - PEDESTAL
Scale 1/2" = 1'-0"

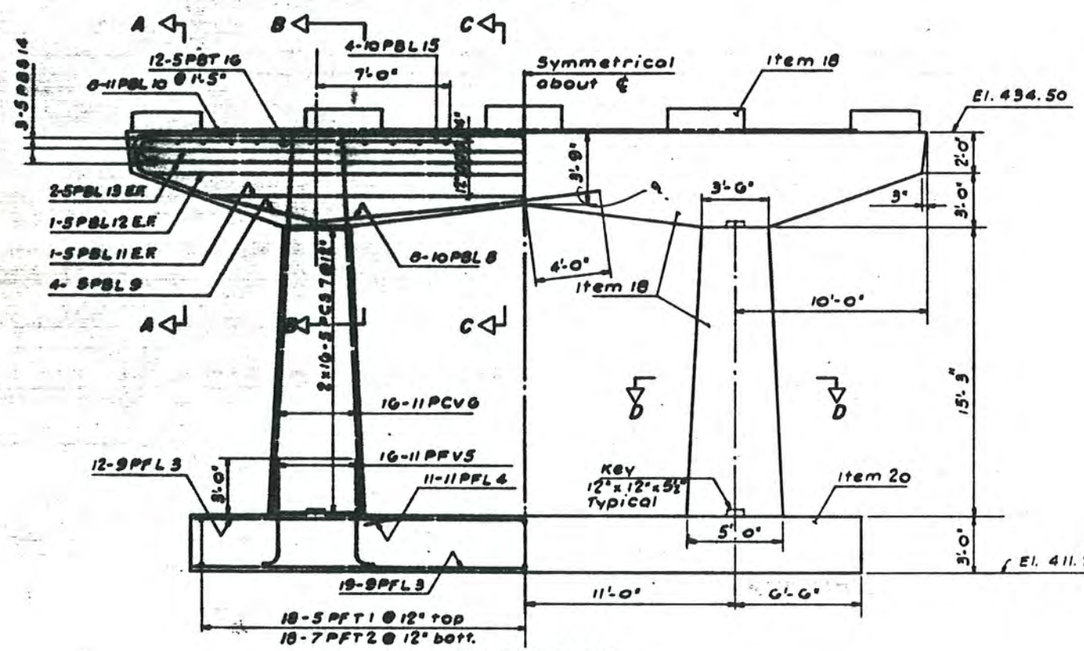

ELEVATION
Scale 1/4" = 1'-0"

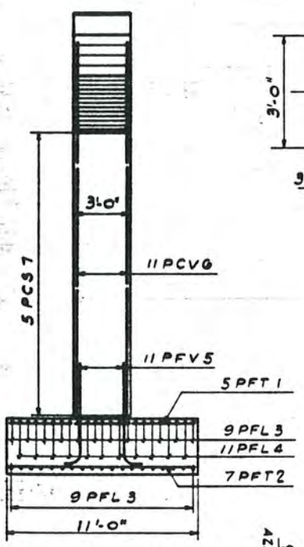

SIDE ELEVATION
Scale 1/4" = 1'-0"

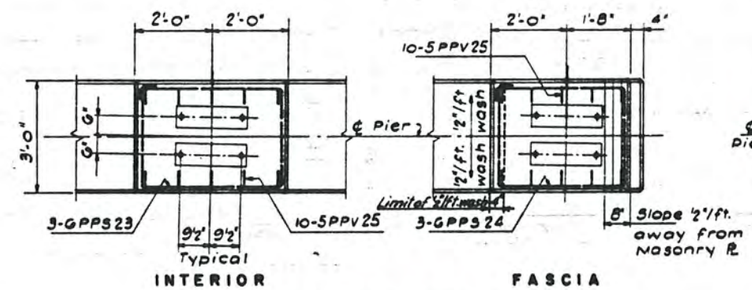

PLAN - PEDESTAL
Scale 1/2" = 1'-0"

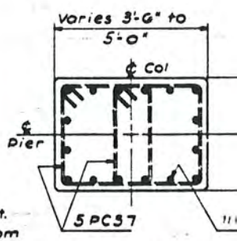

SECTION D-D
Scale 1/2" = 1'-0"

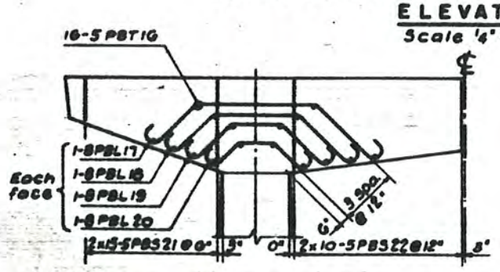

PARTIAL ELEVATION
Scale 1/4" = 1'-0"

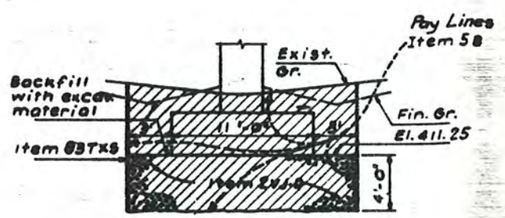

DETAIL - EXCAVATION
Scale 3/16" = 1'-0"

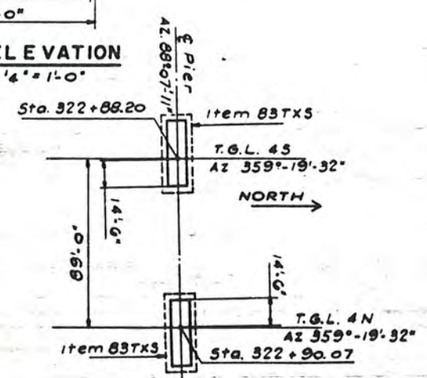

PLAN
Scale 1" = 40'

F.A.I. 481

BRIDGES NO. 4S & 4N
I 481 OVER N.Y. STATE THRU
PIERS

DRAWING NO.	SCALE	DATE	
9093-03	As Shown	8/5/10	

LOCKWOOD, KESSLER & BARTLETT, I
CONSULTING ENGINEERS — SYOSSET, NEW Y

1093682

F.I.S.H. 70-7

FED. RD. REGN. NO.	STATE	FEDERAL AID PROJECT NO.	SHEET NO.	TOTAL SHEETS
1	NEW YORK	F-080-3(28) I-481-2(116)	246	2[illegible]

INTERSTATE ROUTE CONNECTION 570

BUTTERNUT INTERCHANGE-COLLAMER

ONONDAGA COUNTY

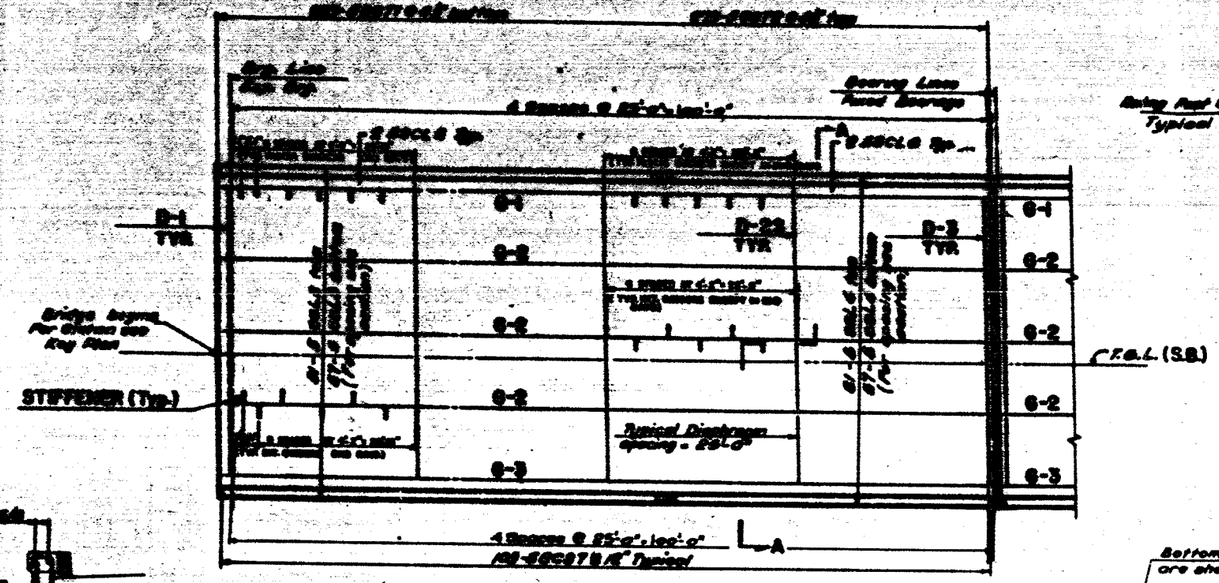

PLAN S.B.
Scale 1"=10'
(NB PLAN SIMILAR)

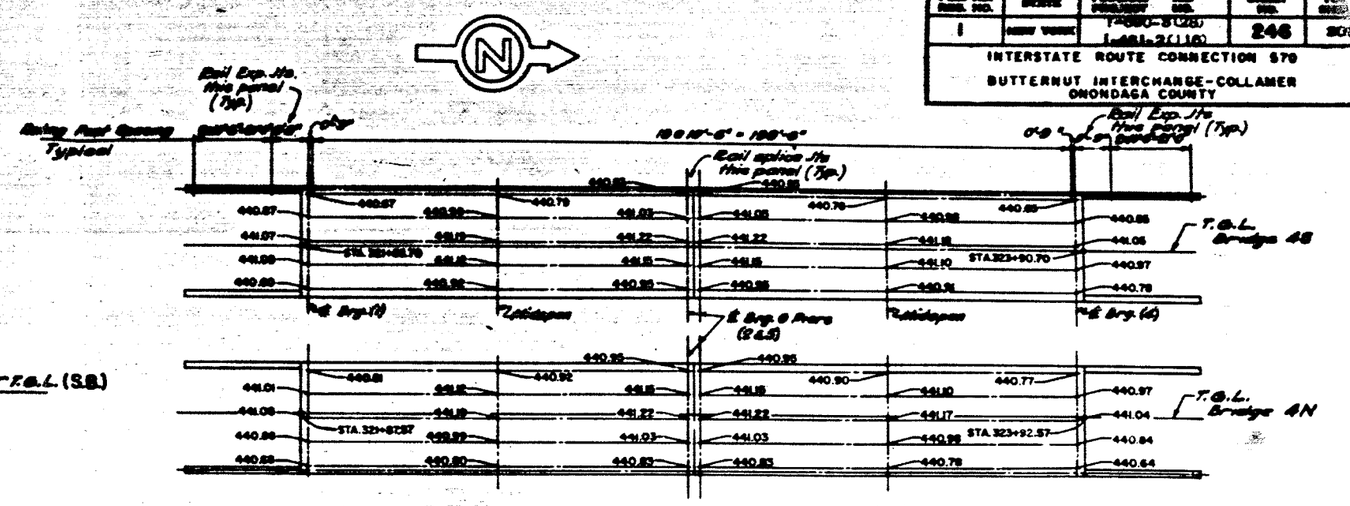

UNDERSIDE OF SLAB ELEVATIONS
& KEY PLAN
No Scale

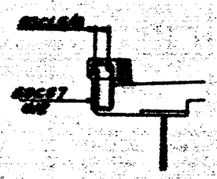

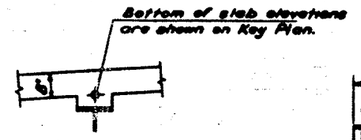

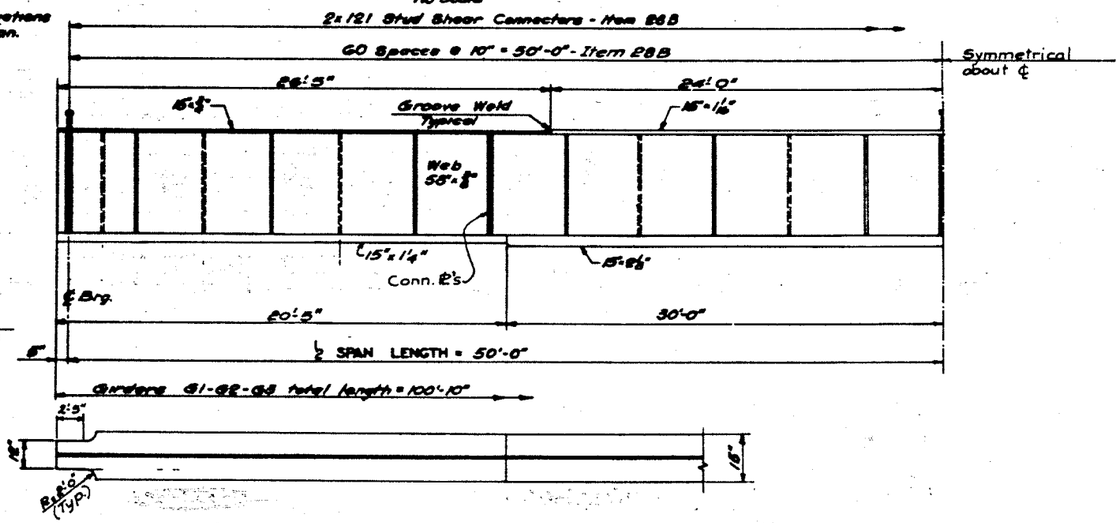

PLAN-BOTTOM FLANGE
No Scale

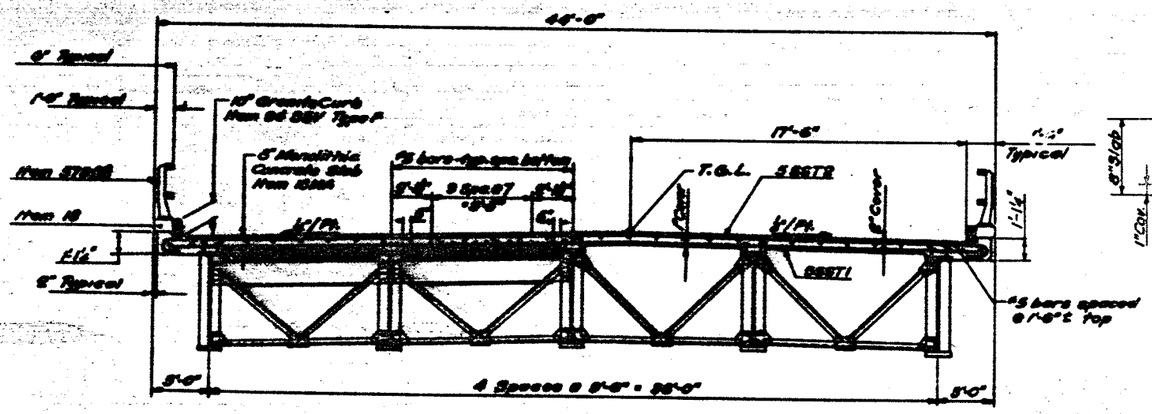

SECTION A-A S.B.
Scale 1"=1'-0"
(NB OPPOSITE HAND)

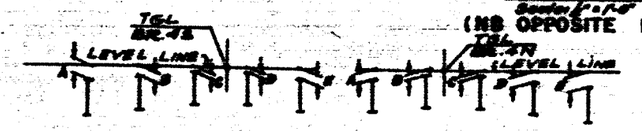

ADJUSTMENT FOR CAMBER	FASCIA GIRDER	INTERIOR GIRDER
SLAB CONCRETE	1 3/16"	1 5/16"
V. C.	1/8"	1/8"
SUPERIMPOSED DEAD LOAD	3/8"	5/16"
D.L. STEEL ERECTED	7/16"	7/16"
TOTAL	2 7/8"	3 1/8"

BRIDGE	BRG. LINES	VERTICAL MEASUREMENTS TO TOP OF STEEL A	B	C	D	E
4S	1-4	1'-8 1/2"	1'-11 3/8"	2 1/8"	1'-10 1/2"	1'-10 1/2"
	2-3	1'-10 3/8"	1'-11 3/8"	1'-11 3/8"	1'-10 1/2"	1'-10 1/2"
4N	1-4	1'-8 1/2"	1'-10 1/2"	1'-11 3/8"	1'-11 3/8"	1'-10 1/2"
	2-3	1'-10 1/2"	1'-10 1/2"	1'-11 1/2"	1'-11 3/8"	1'-10 3/16"

THEORETICAL VERTICAL MEASUREMENTS

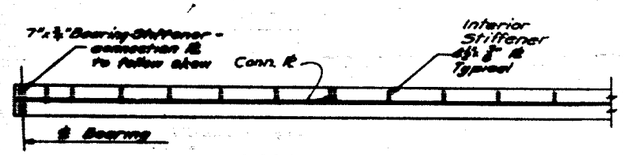

GIRDER G-3 (Top Flange shown)
(G-1 SIMILAR)

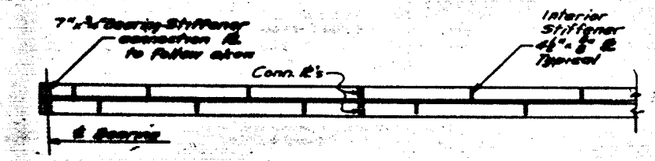

GIRDER G-2 (Top Flange shown)

NOTES:
1. For Diaphragm Details, Connection Plates, and weld sizes, see Sheet No. 129
2. For Fabrication Notes see Sheet No. 129
3. For Curb Details see Sheet No. 125

F.A.I. 481

BRIDGE NO. 4S & 4N
I 481 OVER N.Y. STATE THRUWAY
SUPERSTRUCTURE

DRAWING NO.	SCALE	SHEET	SHEET NO.
9085-03	As Shown	4/2/70	246

F.I.S.

FED. RD. DIST. NO.	STATE	FEDERAL AID PROJECT NO.
1	NEW YORK	I-690-3(28) I-481-2(116)

INTERSTATE ROUTE CONN
BUTTERNUT INTERCHANGE
BUTTERNUT INTERCHANGE

ONONDAGA COUNT

1093682

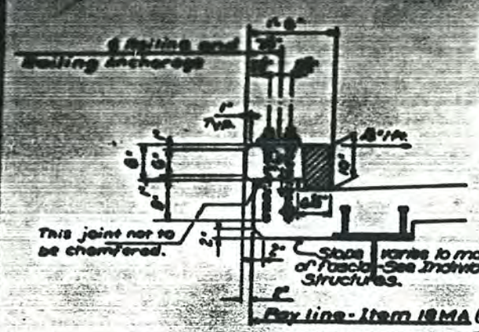

BRUSH CURB DETAILS

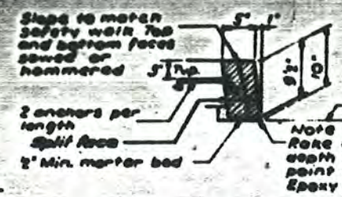

TYPE F CURB - SUPERSTRUCTURE

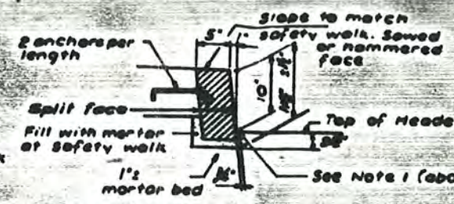

TYPE G CURB (SPECIAL) ABUT. HEADER

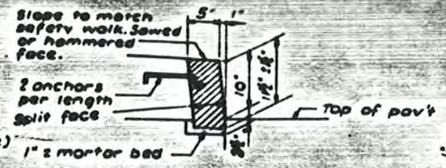

TYPE G CURB - ABUTMENTS

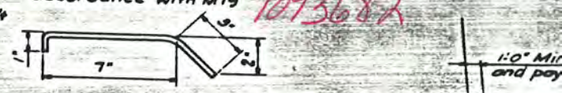

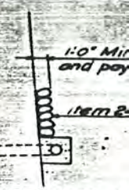

BAGGED SCREENED AG
ITEM 24A

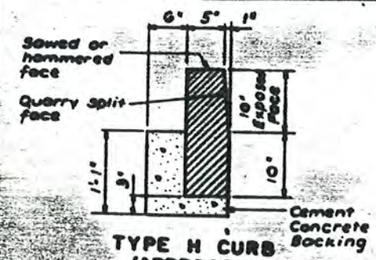

TYPE H CURB (APPROACH)

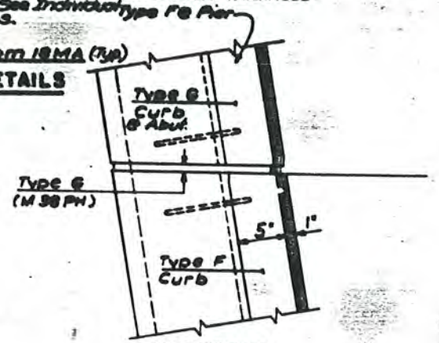

AT ABUTMENT OR PIER (FIXED JT.)

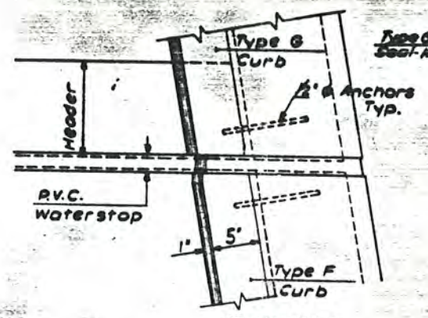

AT ABUTMENT (EXP. JT.)

PLAN - GRANITE CURBS

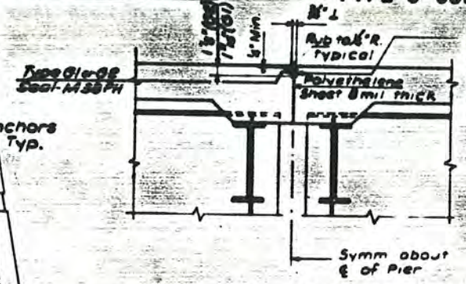

FIXED JOINT AT PIER

Saw recess for Preformed Elastic Joint Sealer not less than 8 days after placing slab concrete and before sidewalk concrete is poured.

Form recess with smooth sided forms. No oil, grease or graphite will be allowed on forms for form release.

ELEVATION - SIDEWALK AT PIER

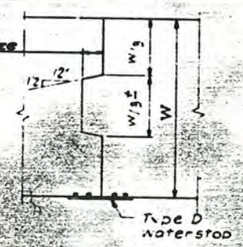

CONSTRUCTION JOINT

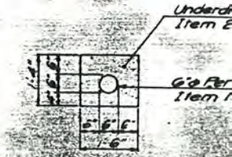

UNDERDRAIN FILTER

Type CA Waterstop M38T
This portion of waterstop must be held in place during the placement of slab concrete by chairs or other suitable means.

Compressed Asbestos Sheet Packing, graphited both sides ⅛" thick. M 136

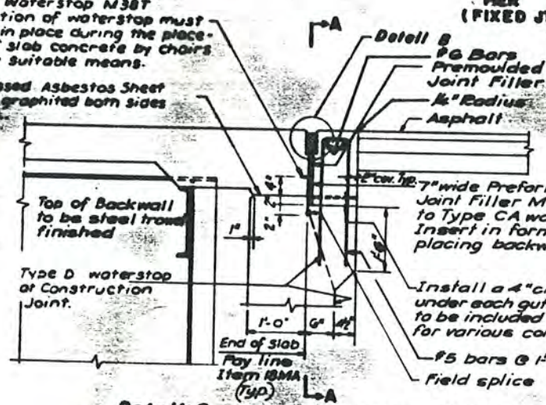

Detail C (EXCEPT BR.9 & BR-5 - RAMP "T" OVER THRUWAY)
EXPANSION JOINT AT ABUTMENT

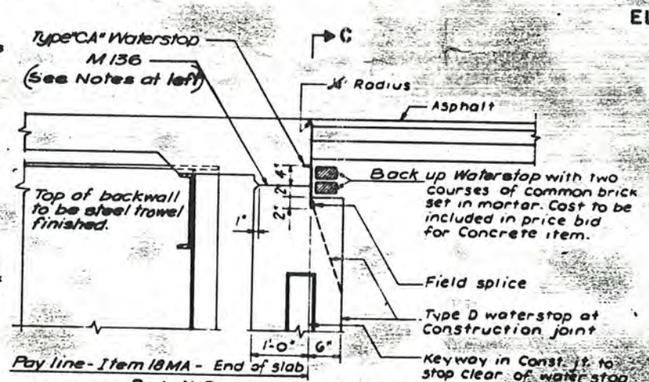

Detail D
FIXED JOINT AT ABUTMENT

Notes

1- Exposed waterstops must be protected from damage by suitable means during all phases of construction.

2- Holes must not be made in waterstops for any purpose, except that Type D Waterstop may be tacked to forms. Tacking to forms will be permitted only in the area between the outside ribs and the edges of the Type D Waterstop.

3- All splices shall be thermal splices. Method of field splicing shall be approved by Deputy Chief Engineer, Design.

4- The cost of waterstops and other joint sealing materials and preparation shall be included in the price bid for the various concrete items of the contract.

5- Sawed recesses for preformed elastic joint sealer shall be sawed in one (1) operation using a saw blade (or blades and spacers) equal to the width of the slot desired at the time of sawing, such that the desired slot is produced by one (1) pass of the saw. Multiple saw cuts will not be permitted for this purpose.

In the Table below, the "R" dimension is measured at 68° F. "T" is the amount that "R" must be decreased for every 10° rise in temperature or increased for every 10° fall in temperature.

STRUCTURE	END CONDITION	TYPE	R	S	X	T
4 SB 4N Rt. I 481 / NYS THRUWAY 5 "T" RAMP / NYS THRUWAY (No. Span)	EXPANSION 81 ft. to 100 ft.	D1 OR D2	1⅝"	3⅜"	1"	5/64"
4 EB Conn. / Rt. 481 S.B. 5 "WN" Line / Rt. I 481 S.B. 6 Rt. I 481 S.B. / Rt. I 690 W.B. 7 "WN" Line / Rt. I 690 W.B. 1S & 1N Rt. I 481 / S.H. 555 3SB 3N Rt. I 481 / KIRKVILLE Rd. 5 "T" RAMP / NYS THRUWAY (Sa. Span)	EXPANSION 101 ft. to 125 ft.	E1	1⅞"	4⅛"	1¼"	3/32"
		E2	1⅞"	3¾"	1¼"	3/32"

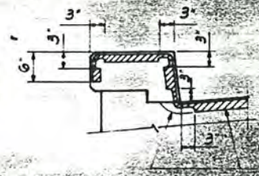

NOTE
All cutting o
Elastic Joint
done with a c
soap and wate

DETAIL FOR CUTTING AND B
SEAL (M38PH) DETAIL E

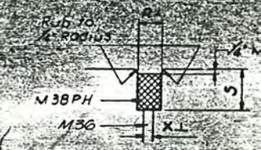

Saw recess for Preformed Joint Sealer not less than 8 after placing slab concre before safety walk conc is poured.

Detail B
EXPANSION JOINT

THIS SHEET DOES NOT APPLY TO BR

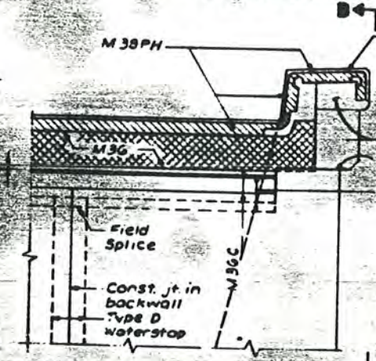

Elevation A-A
INSTALLATION OF WATERSTOP

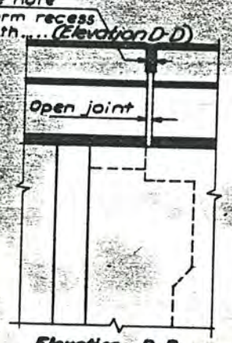

Elevation B-B

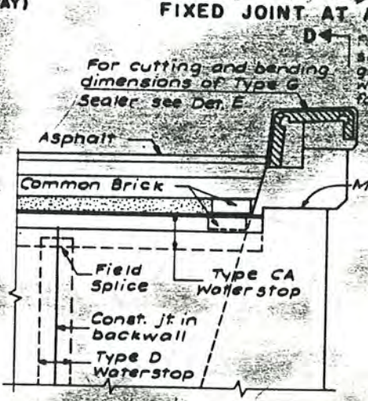

Elevation C-C

Elevation D-D

BUTTERNUT INTER
F.A.I. 690 & F.A.

DETAILS - SHEET

DRAWING NO.	SCALE
7504-02	None

LOCKWOOD, KESSLER

D25009

FED. RD. REG. NO.	STATE	FEDERAL AID PROJECT NO.	SHEET NO.
	NEW YORK	I-481-2(152)	289

Interstate Rte 571 Extension (I-481)
Collamer Interchange to Northern Blvd.
Onondaga County

CAPITAL PROJECT IDENTIFICATION NO. 3107.00-11

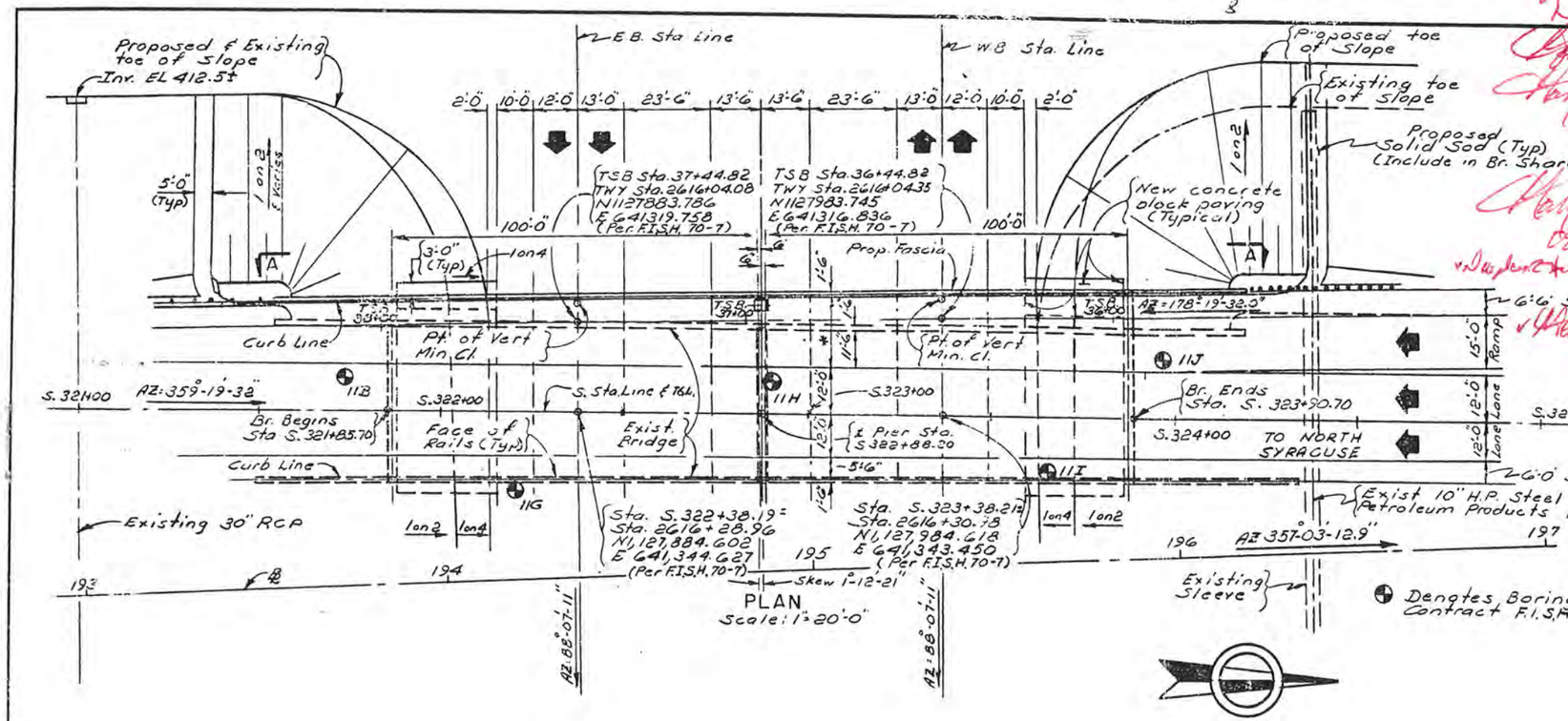

PLAN
Scale: 1" = 20'-0"

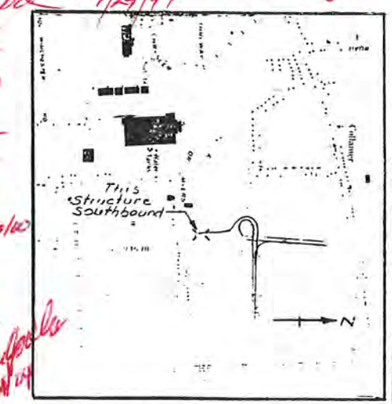

LOCATION MAP
SYRACUSE EAST QUADRANGLE
Scale: 1" = 2000'

INDEX

DRAWING TITLE	DWG
PLAN & PROFILE	1,2
ESTIMATE & NOTES	3
EXCAVATION & BACKFILE	4
NORTH ABUTMENT	5,6,7
PIER	8
SOUTH ABUTMENT	9,10,11
SUPERSTRUCTURE	12,13,14,15
LOW STEEL BEARINGS	16
RAILING LAYOUT	17
SOD GUTTER DETAILS	18
MISCELLANEOUS DETAILS	19
SUBSURFACE PROFILE	20
JOINT DETAILS	21,22
BAR LISTS	23,24

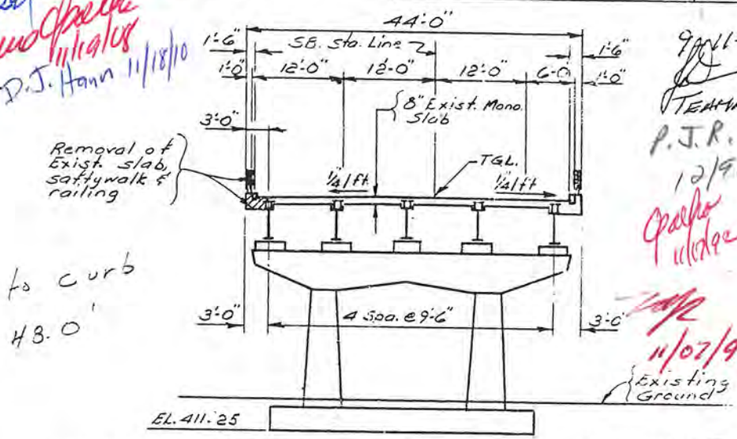

EXISTING BRIDGE SECTION
Scale 1" = 10'-0"

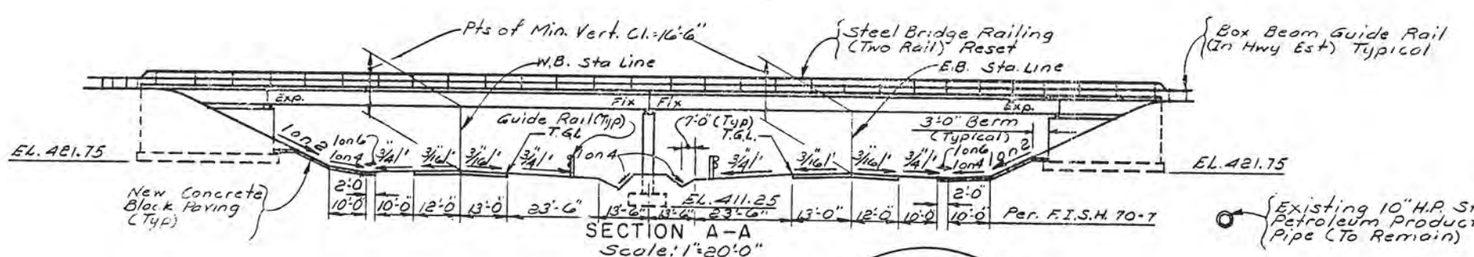

SECTION A-A
Scale: 1" = 20'-0"

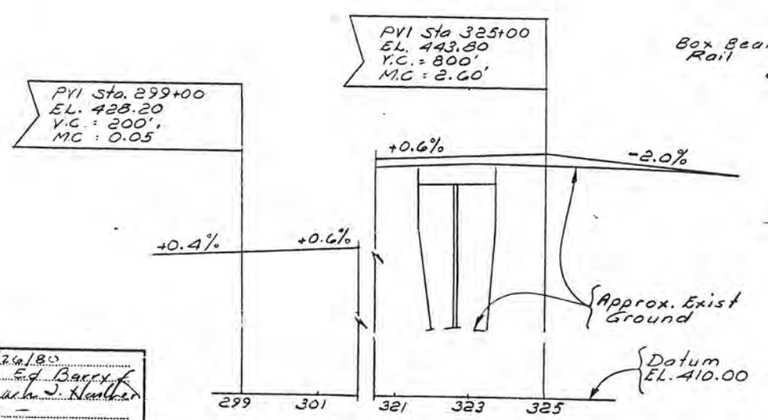

EXISTING PROFILE-ROUTE I481 S.B.
Scale: Horiz. 1" = 200', Vert 1" = 20'-0"

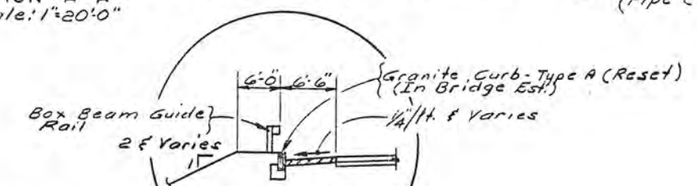

PARTIAL SECTION AT BRIDGE
Scale: 1" = 10'-0"

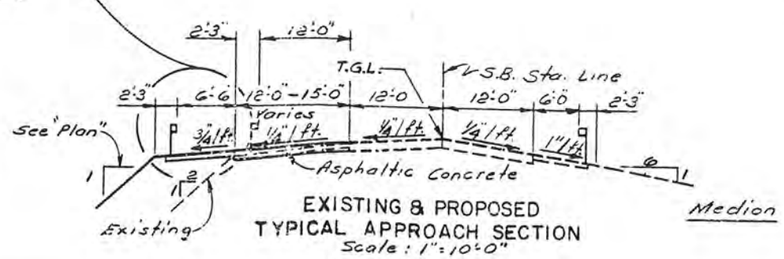

EXISTING & PROPOSED TYPICAL APPROACH SECTION
Scale: 1" = 10'-0"

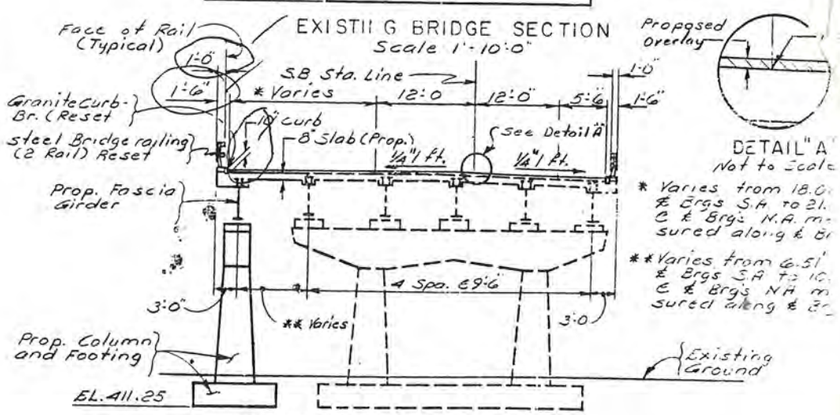

PROPOSED BRIDGE SECTION
Scale: 1" = 10'-0"

B.I.N. - 1093681

DATE MADE 8/26/80
PROJECT ENGINEER Ed Barry
IN CHARGE OF Jack J. Hauber
DESIGNED BY —
DESIGN CHECKED BY —
DETAILED BY J. Van Bauer
DETAIL CHECKED BY

STATE OF NEW YORK
DEPARTMENT OF TRANSPORTATION
DIVISION OF CONSTRUCTION

SOUTHBOUND I-481 OVER
N.Y.S. THRUWAY

PLAN & PROFILE

1093682 D250094

FED. RD. REG. NO.	STATE	FEDERAL AID PROJECT NO.	SHEET NO.	TOTAL SHEETS
	NEW YORK	I-481-2(152)	290	312

Interstate Rte. 571 Extension (I-481)
Collamer Interchange to Northern Blvd.
Onondaga County

CAPITAL PROJECT IDENTIFICATION NO.

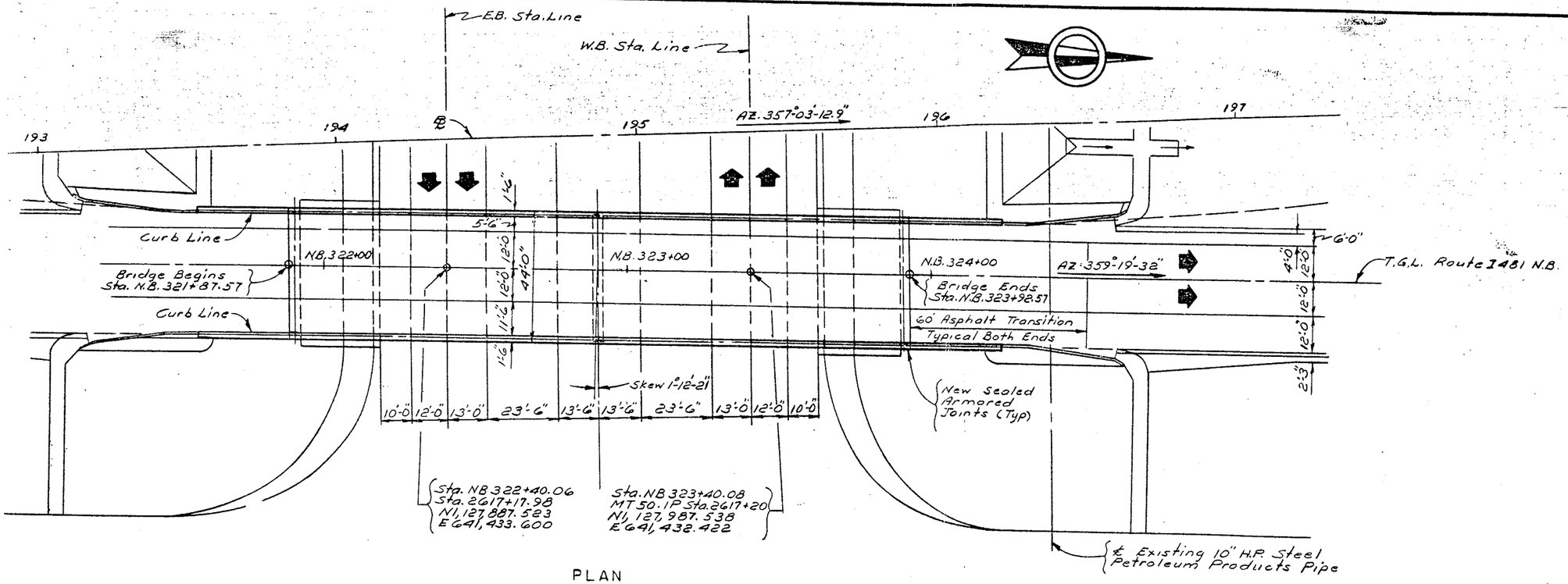

PLAN
BRIDGE NO. 4N
Scale: 1"=20'-0"

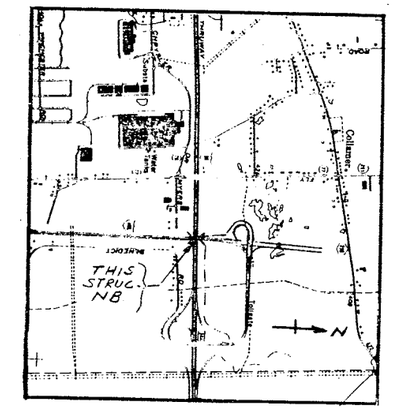

LOCATION MAP
SYRACUSE EAST QUADRANGLE
Scale: 1"=2000'

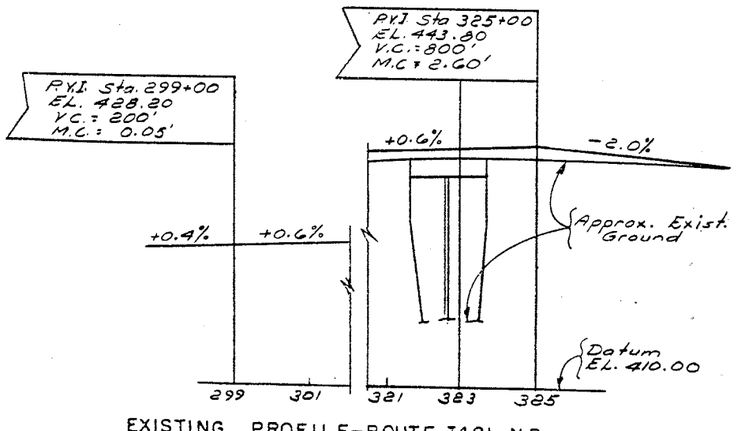

EXISTING PROFILE-ROUTE I481 NB
Scale: Horiz. 1"=200', Vert. 1"=10'-0"

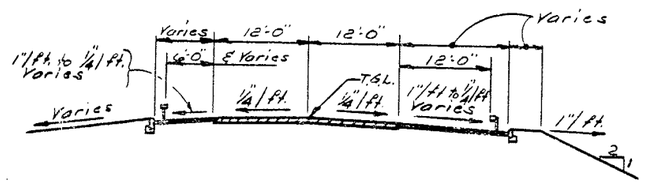

TYPICAL
EXISTING APPROACH SECTION
Scale: 1"=10'-0"

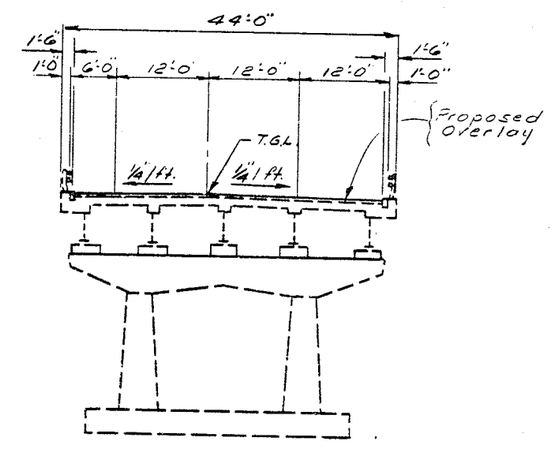

BRIDGE SECTION
Scale: 1"=10'-0"

BIN 1093682

STATE OF NEW YORK
DEPARTMENT OF TRANSPORTATION
DIVISION OF DESIGN AND CONSTRUCTION

NORTHBOUND I-481 OVER
N.Y.S. THRUWAY

PLAN & PROFILE

PROJ. ENG. [illegible] DATE [illegible]

179a (7/80)

1093682

10

FED. RD. REG. NO.	STATE	FEDERAL AID PROJECT NO.
	NEW YORK	I-481-2(152)

Interstate Rte. 571 Extensio
Collamer Interchange to Nort
Onondaga County

CAPITAL PROJECT IDENTIFICATION NO

ESTIMATE OF QUANTITIES

ITEM NO.	DESCRIPTION	UNIT	ESTIMATED SUBSTR	ESTIMATED SUPER	ESTIMATED MISC.	ESTIMATED TOTAL	FINAL
	SOUTHBOUND						
203.21	Select Structural Fill	C.Y.	234	—	—	234	
206.01	Structure Excavation	C.Y.	521	—	—	521	
552.05	Safe Operation Sheet Piling	S.F.	—	—	1400	1400	
555.01	Concrete for Structures - Class "A"	C.Y.	11.9	5.02	—	17	
555.02	Concrete for Structures - Class "B"	C.Y.	186	—	—	186	
555.0401	Concrete for Structures - Class "E" (Structural Slab -	S.F.	—	2310	—	2310	
	Integral W.S. Bottom Formwork Required)						
15555.2001	High Density Concrete Overlay	S.F.	—	10,454	—	10,454	
15555.3001	Latex Modified Concrete Overlay	S.F.	—	10,454	—	10,454	
556.0201	Uncoated Bar Reinf. for Concrete Structures	Lb's.	13,587	9,408	—	22,995	
556.0202	Epoxy Coated Bar Reinf. for Concrete Structures	Lb's.	433	10,006	—	10,439	
556.03	Stud Shear Connectors for Bridges	Ea.	—	536	—	536	
559.01	Epoxy Protective Coating	S.F.	155	—	—	155	
564.0506	Structural Steel	L.S.	—	Nec.	—	Nec.	
565.0301	Bridge Bearings Type BEI (Low Steel Exp)	Ea.	—	2	—	2	
565.0401	Bridge Bearings Type BFI (Low Steel Fix.)	Ea.	—	2	—	2	
567.31	Armored Joint System with Compression Seal (Type A1)	L.F.	—	54	—	54	
567.35	Armored Joint System with Compression Seal (Type A5)	L.F.	—	108	—	108	
570.0101	Cleaning & Priming New Structural Steel	L.S.	—	Nec.	—	Nec.	
570.0201	Painting New Structural Steel	L.S.	—	Nec.	—	Nec.	
570.0301	Maintenance Cleaning & Priming of Structural Steel	L.S.	—	Nec.	—	Nec.	
570.0401	Maintenance Painting of Structural Steel	L.S.	—	Nec.	—	Nec.	
580.01	Removal of Structural Concrete	C.Y.	19	29	—	48	
15580.09	Scarification of Structural Slab	S.F.	—	10,105	—	10,105	
15580.4401	Drilling & Grouting Reinforce Bars or Anchor Bolts	L.F.	82	—	—	82	
587.02	Bridge Railing Removal & Storage	L.F.	71	201	—	272	
587.04	Installation of Stored Bridge Railing (Painting Not Required)	L.F.	71	201	—	272	
605.0702	Steel Pipe Underdrain 4 5/8 In. Semi Cir. or 6 In. Perf. Corr.	L.F.	93	—	—	93	
605.0901	Underdrain Filter - Type I	C.Y.	56	—	—	56	
609.0301	Stone Curb - Bridge (Type A)	L.F.	—	—	35	35	
16609.3226	Removing Storing & Resetting Stone Bridge Curb	L.F.	62	—	—	62	
612.01	Sodding	S.Y.	—	—	89	89	
615.03	Watering Plants and Sod	M Gal.	—	—	1.7	2	
619.01	Basic Maintenance & Protection of Traffic	L.S.	—	—	Nec.	Nec.	
620.09	Concrete Block Paving	S.Y.	—	—	54	54	
634.01	Survey and Stakeout	L.S.	—	—	Nec.	Nec.	
15634.0503	Training Special Provision	T.M.H.	—	—	400	400	
637.09	Engineers Office - Type E	M.O.	—	—	1	1	
699.01	Mobilization	L.S.	—	—	Nec.	Nec.	
15699.0001	Fuel Price Adjustment	L.S.	—	—	Nec.	Nec.	
	NORTHBOUND						
555.01	Concrete for Structures Class "A"	C.Y.	—	.21	—	1	
15555.2001	High Density Concrete Overlay	S.F.	—	8,820	—	8,820	
15555.3001	Latex Modified Concrete Overlay	S.F.	—	8,820	—	8,820	
556.0202	Epoxy Coated Bar Reinf. for Concrete Structures	Lb's.	90	—	—	90	
567.31	Armored Joint System with Compression Seal (Type A1)	L.F.	—	46	—	46	
567.35	Armored Joint System with Compression Seal (Type A5)	L.F.	—	92	—	92	
570.0302	Maintenance Cleaning & Priming of Structural Steel	L.S.	—	Nec.	—	Nec.	
570.0402	Maintenance Painting of Structural Steel	L.S.	—	Nec.	—	Nec.	
15580.09	Scarification of Structural Slab	S.F.	—	8,408	—	8,408	
15580.1301	Exposing Reinforce Bars	S.F.	—	121	—	121	
619.01	Basic Maintenance & Protection of Traffic	L.S.	—	—	Nec.	Nec.	
15634.0503	Training Special Provision	T.M.H.	—	—	100	100	
637.09	Engineer Office - Type E	M.O.	—	—	1	1	
699.01	Mobilization	L.S.	—	—	Nec.	Nec.	

DETAILED BY

DETAIL CHECKED BY

DESIGN CHECKED BY N.A.

DESIGNED BY N.A.

GENERAL NOTES:

Design Specification: New York State Department of Transportation Standard Specifications for Highway Bridges with all revisions in effect as of Nov. '81.

Live Load: HS20-44.

Material and Construction Specifications: Standard Specifications, Construction and Materials, New York State Department of Transportation, Design and Construction Division, dated January 2, 1981 with all additions and modifications.

The cost of water used for compaction of select fill items shall be paid for under Item 203.1601, Applying Water.
(included in the Highway Estimate)

The cost of furnishing and placing water used for Sod Gutters will be paid for under Item 615.03 (included in Bridge Estimate

The cost of furnishing and placing water used for Sod Gutters is included in the Sodding Item.

The cost of all joint material will be included in the price bid for various items of the Contract, unless otherwise specified on the

The Contractor shall perform all work with care so that any materials which are to remain in place, or which are to remain the property of the State, will not be damaged. If the Contractor damages any materials which are to remain in place, or which are to remain the property of the State, the damaged materials shall be repaired or replaced in a manner satisfactory to the Engineer at the expense of the Contractor.

Whenever items in the Contract require materials to be removed and disposed of, the cost of supplying a disposal area and transportation to that area shall be included in the unit price bid for those items.

During removal operations, the Contractor shall not be allowed to drop waste concrete, debris and other material to the area below the bridge except where the plans specifically permit the dropping of material. Platforms, nets, screens or other protective devices shall be used to catch the material. If the Engineer determines that adequate protective devices are not being employed, the work shall be suspended until adequate protection is provided.

All material falling on the area below and adjacent to the bridge shall be removed and disposed of by the Contractor.

The cost of furnishing, installing, maintaining, removing and disposing of all platforms, nets, screens or other protective devices shall be included in the unit bid price of the appropriate items of the Contract.

SUBSTRUCTURE NOTES

Unsuitable material, including topsoil, shall be removed from beneath substructures placed on fills less than 20 feet in height. The h fill shall be measured from the original ground surface to the th grade line. Replacement of the removed material shall be done wi item indicated on the Contract Plans.

All embankments of Select Structure Fill, Item 203.21 shall to 100 percent of standard Proctor maximum density as defined unde 203-3.12 - Compaction.

Embankment in Place, Item 203.03 , and Select Structure Fill, shall be placed simultaneously, in contact, on both sides of the payment line. Sheeting or other means shall not be used to separa two materials.

The installation of Select Structure Fill, Item 203.21 , as s the Structural Plans, shall be completed immediately following the of abutments or walls.

Excavation below planned footing elevation will not be allowed written permission from the Engineer. Backfill of unauthorized below or beyond payment lines will be at the Contractor's expense fill material will be Class 8 Concrete unless otherwise directe Engineer.

Epoxy Protective Coating for Concrete, Item 559.01, shall the following surfaces:

ABUTMENTS: All exposed pedestal surfaces, bridge seats, under the bearings, exposed vertical surfaces, of curtainwalls facing the superstructure.

The Contractor, with the permission of the Deputy Chief Engineer may elect to introduce construction joints in the abutments at shown on the Plans. These construction joints shall be provided keys and waterstops. Vertical construction joints introduced in should preferably be placed midway between the pedestals.

Epoxy Protective Coating for Concrete, Item 559.01, shall be applied to the following surfaces:

ABUTMENTS All new exposed pedestal surfaces, bridge seats, exposed vertical surfaces of backwall, and curtainwalls facing the superstructure.

PIER All new pedestal surfaces, including the area under the bearings.

SUPERSTRUCTURE NOTES

The structural slab for this structure shall be formed using permanent corrugated metal forms for concrete decks. (See details in Plans, Dwg. No. 15.

STRUCTURAL STEEL-TOTAL WEIGHT FOR PROGRESS PAYMENT

ITEM NUMBER	WEIGHT (LBS)	LOCATION	
		SOUTHBOUND	NORTHBOUND
564.0506	56,850	SPANS 1 & 2	—

STATE OF NEW YO
DEPARTMENT OF TRANSPO
DIVISION OF DESIGN AND CON

NY & SB I-481 OVER
N.Y.S. THRUWAY

ESTIMATE & NO

1093682 D250094

FED. RD. REG. NO.	STATE	FEDERAL AID PROJECT NO.	SHEET NO.	TOTAL SHEETS
	NEW YORK	I-481-2(152)	292	312

Interstate Rte. 571 Extension (I-481)
Collamer Interchange to Northern Blvd.
Onondaga County

CAPITAL PROJECT IDENTIFICATION NO.

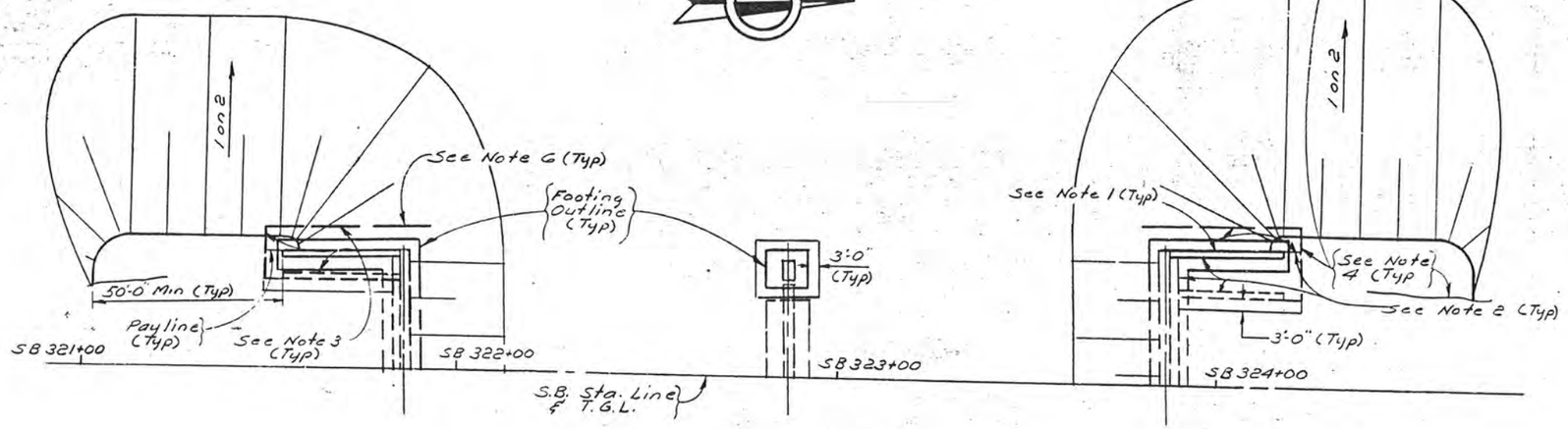

PLAN
Scale: 1"=20'-0"

NOTES

1. Backfill with suitable excavated material as provided for under Item 206.01, Structure Excavation.
2. Backfill with Item 203.21, Select Structure Fill to subgrade elevation after abutment construction.
3. Paylines for Structure Excavation, Item 206.01.
4. Paylines for Highway Embankment Material (In Hwy. Est.)
5. Place Item 605.0901, Underdrain Filter, Type I to subgrade of roadway. For additional details see "Structure Backfill Placement" this drawing
6. Safe Operation Sheet Piling Item 552.05 to be used where excavation depth exceeds 5'-0".
7. For additional notes, see dwg. no.3
8. For Concrete removal Item and limits see Abutment drawings

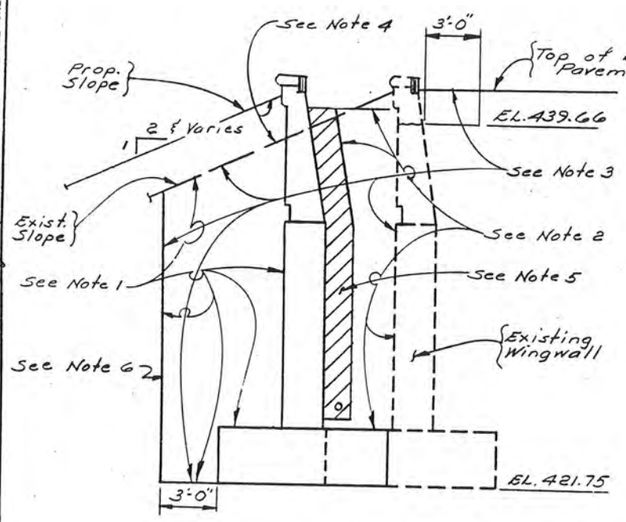

SECTION THRU
SOUTHWEST WINGWALL
Scale: 1/4"=1'-0"

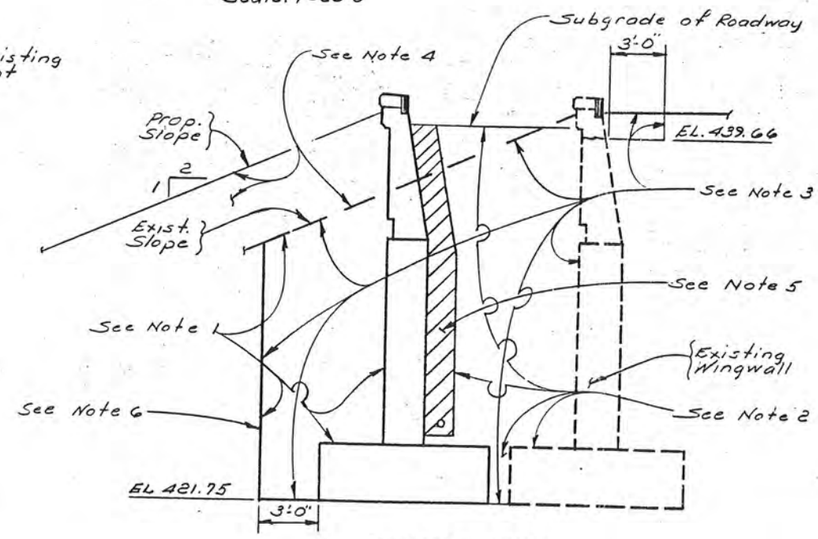

SECTION THRU
NORTHWEST WINGWALL
Scale: 1/4"=1'-0"

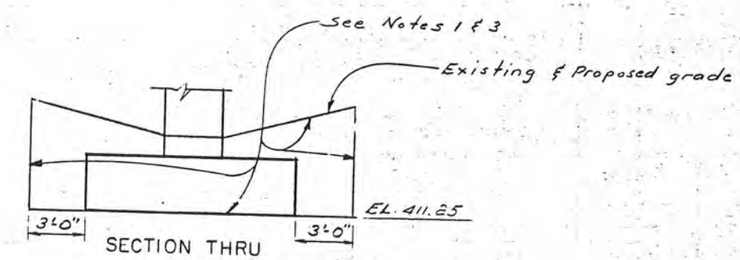

SECTION THRU
PIER
Not to Scale

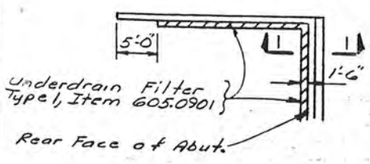

PLAN

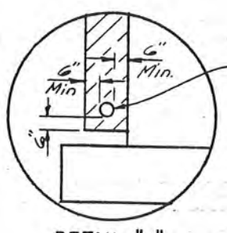

DETAIL "A"

STRUCTURE BACKFILL PLACEMENT
Not to Scale

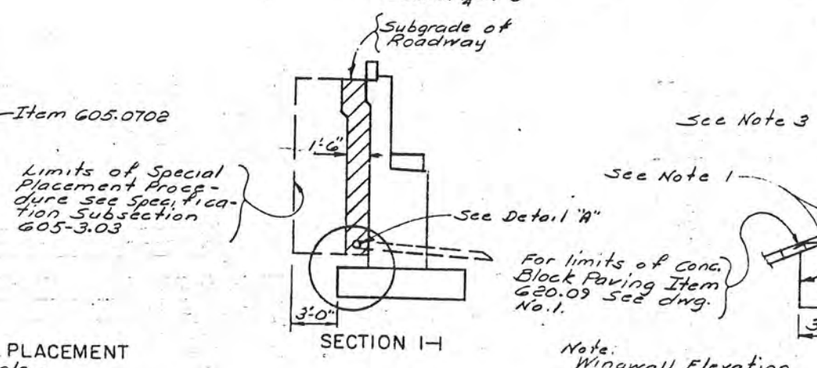

SECTION 1-1

Note:
Wingwall Elevation Limits Projected to Section Line

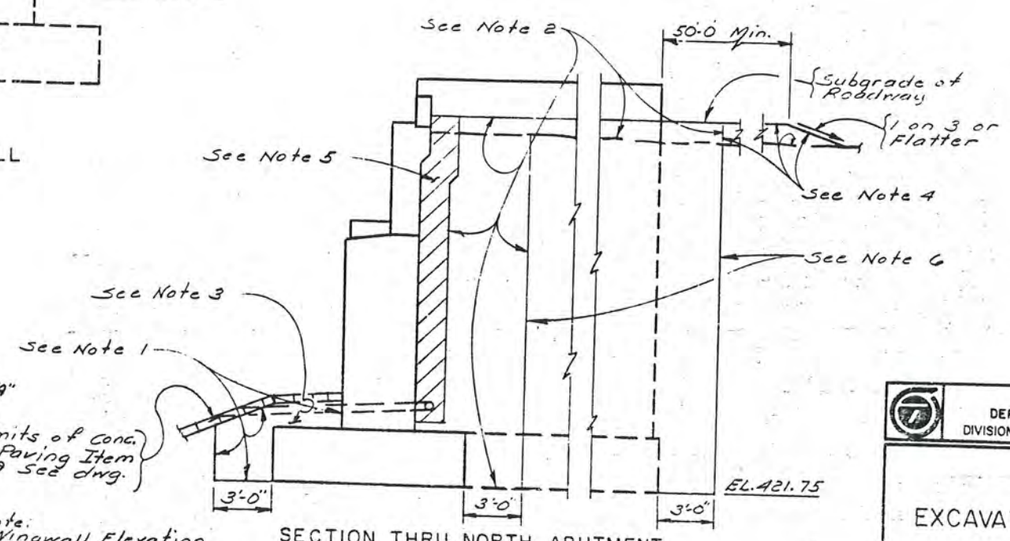

SECTION THRU NORTH ABUTMENT
SOUTH ABUTMENT SIMILAR
Scale: 1/4"=1'-0"

STATE OF NEW YORK
DEPARTMENT OF TRANSPORTATION
DIVISION OF DESIGN AND CONSTRUCTION

SOUTHBOUND I-481 OVER
N.Y.S. THRUWAY

EXCAVATION & BACKFILL

PROJ. ENG. Ed Pearsu | DATE MADE

DETAIL CHECKED BY

BD 179a (7/80)

1093682
D250094

FED. RD. REG. NO.	STATE	FEDERAL AID PROJECT NO.	SHEET NO	TOTAL SHEETS
	NEW YORK	I-481-2(152)	293	312

Interstate Rte. 571 Extension (I-481)
Collamer Interchange to Northern Blvd.
Onondaga County

CAPITAL PROJECT IDENTIFICATION NO.

Note

* The removal limit (3½"±) is based on using 1½" overlay and a proposed 5" header (see dwg. no. 21) If another overlay depth is used the 3½"± dimension will have to be adjusted

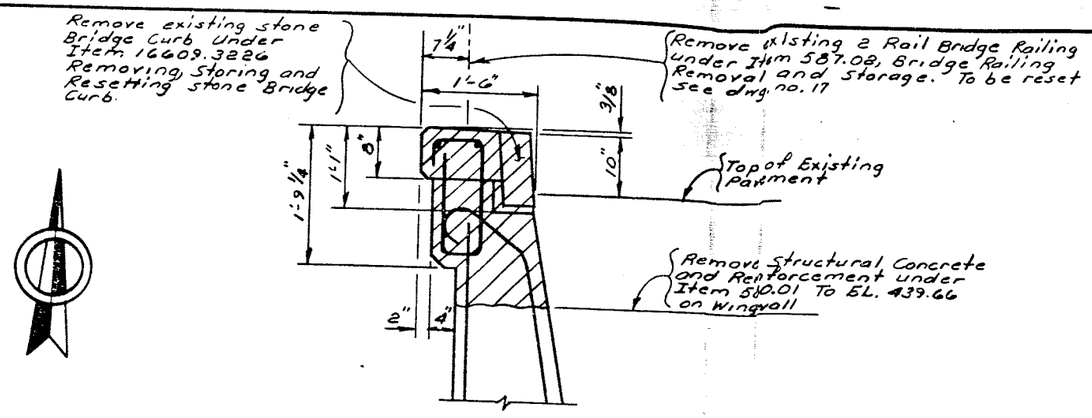

SECTION A–A
Scale: 1"=1'-0"

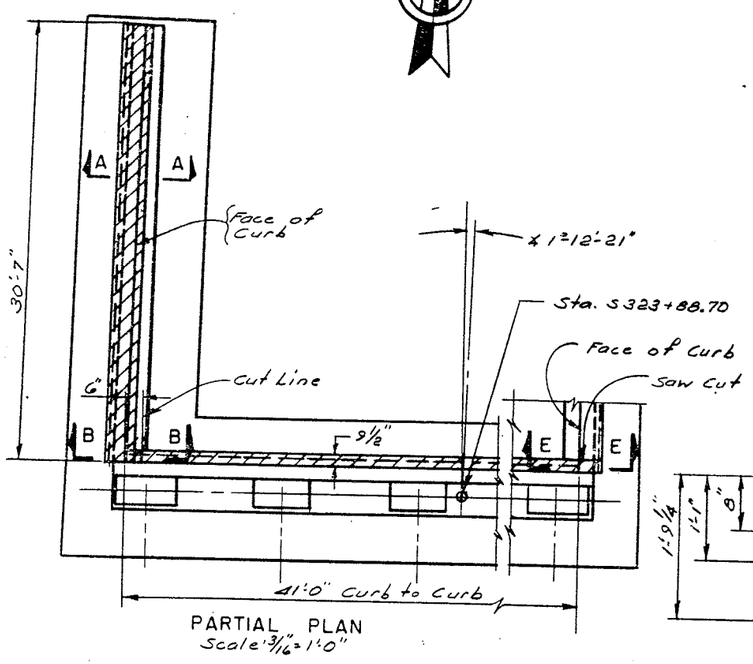

PARTIAL PLAN
Scale: 3/16"=1'-0"

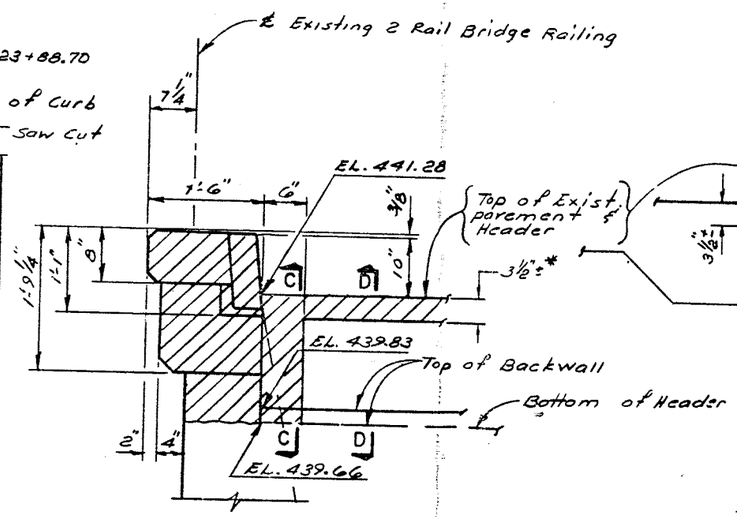

SECTION B–B
Scale: 1"=1'-0"

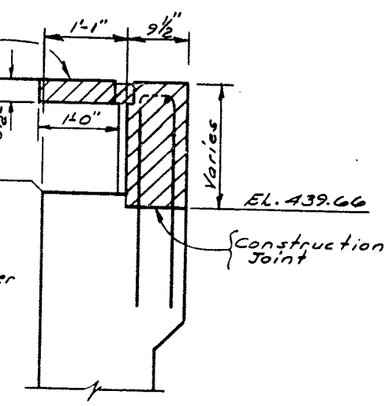

SECTION C–C
Scale: 1"=1'-0"

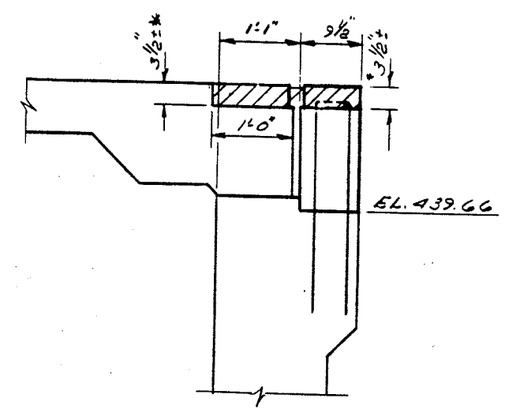

SECTION D–D
Scale: 1"=1'-0"

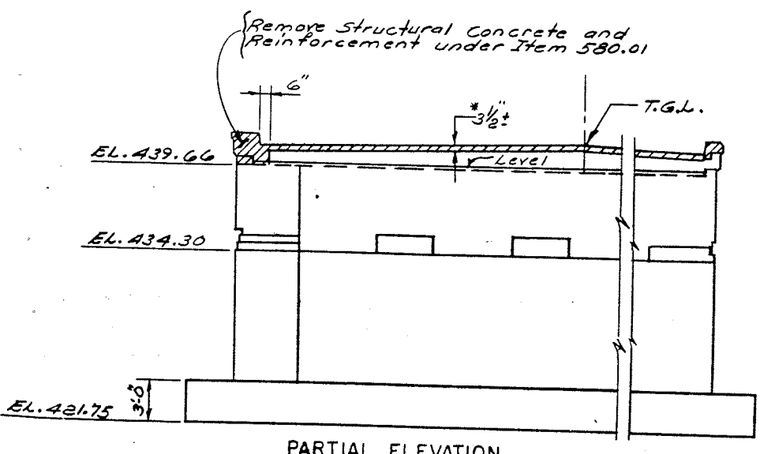

PARTIAL ELEVATION
Scale: 3/16"=1'-0"

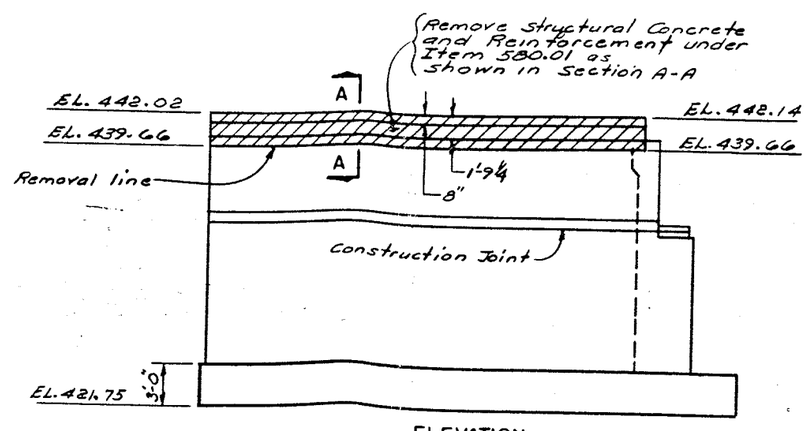

ELEVATION
NORTHWEST WINGWALL

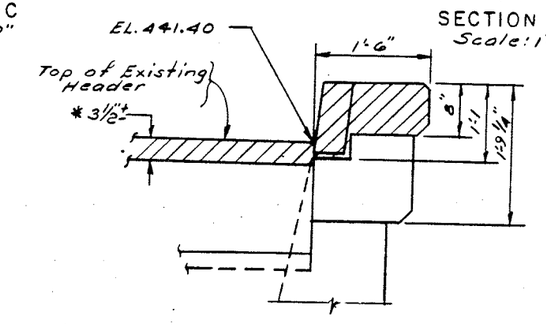

SECTION E–E
Scale: 1"=1'-0"

STATE OF NEW YORK
DEPARTMENT OF TRANSPORTATION
DIVISION OF DESIGN AND CONSTRUCTION

SOUTHBOUND I-481 OVER
N.Y.S. THRUWAY

NORTH ABUTMENT
(REMOVAL)

79a (7/80)

1093682 D250094

FED. RD. REG. NO.	STATE	FEDERAL AID PROJECT NO.	SHEET NO.	TOTAL SHEETS
	NEW YORK	I-481-2(152)	294	312

Interstate Rte. 571 Extension (I-481)
Collamer Interchange to Northern Blvd.
Onondaga County

CAPITAL PROJECT IDENTIFICATION NO

NORTH ABUTMENT		
LOCATION	ITEM 555.01	ITEM 555.02
POUR A	——	38.95 CY
POUR B	——	36.69 CY
POUR C	——	15.31 CY
POUR D	.33 CY	——
POUR E	.81 CY	——
POUR F	.15 CY	——
POUR G	.02 CY	——
TOTALS	1.31 CY	90.95 CY

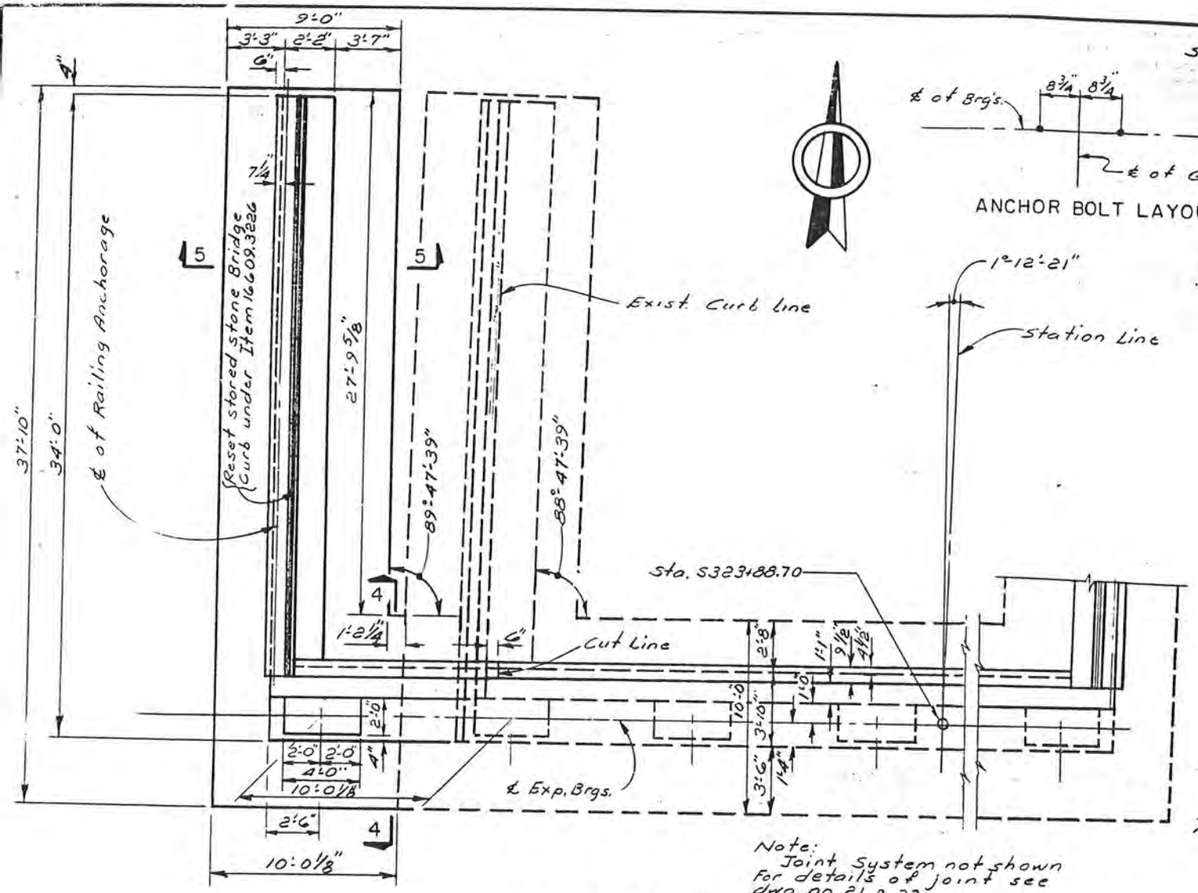

PARTIAL PLAN
Scale: ¼"=1'-0"

Note:
Joint System not shown
For details of joint see
drwg. no. 21 & 22.

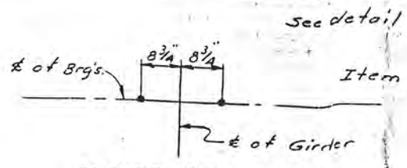

ANCHOR BOLT LAYOUT

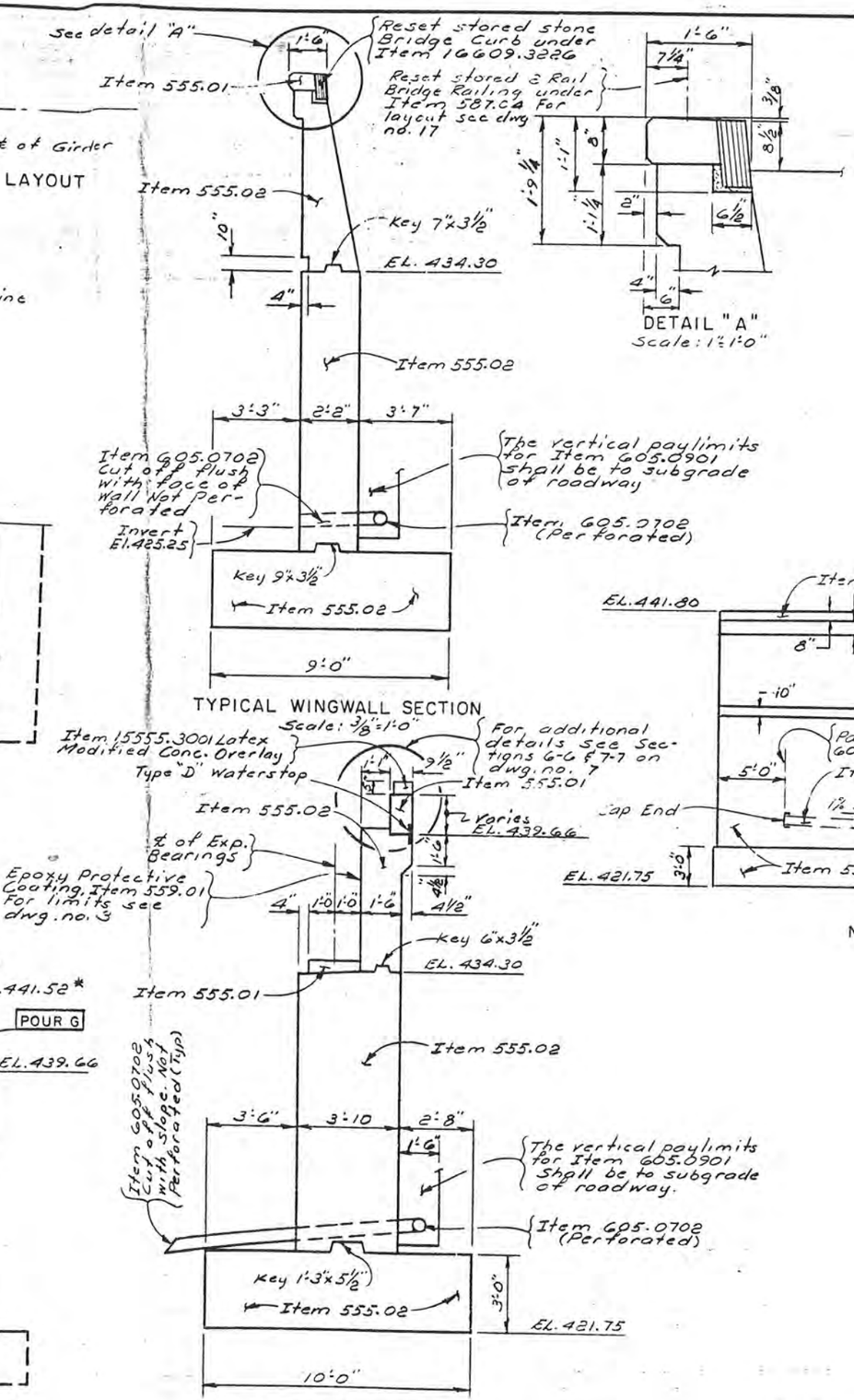

TYPICAL WINGWALL SECTION
Scale: ⅜"=1'-0"

DETAIL "A"
Scale: 1"=1'-0"

TYPICAL ABUTMENT SECTION
Scale: ⅜"=1'-0"

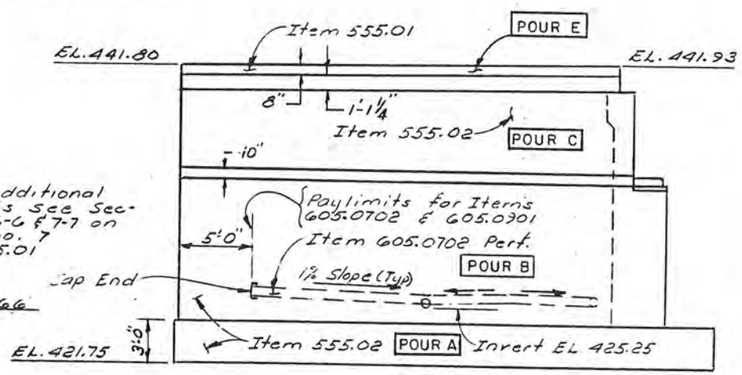

ELEVATION
NORTHWEST WINGWALL
Scale: 3/16"=1'-0"

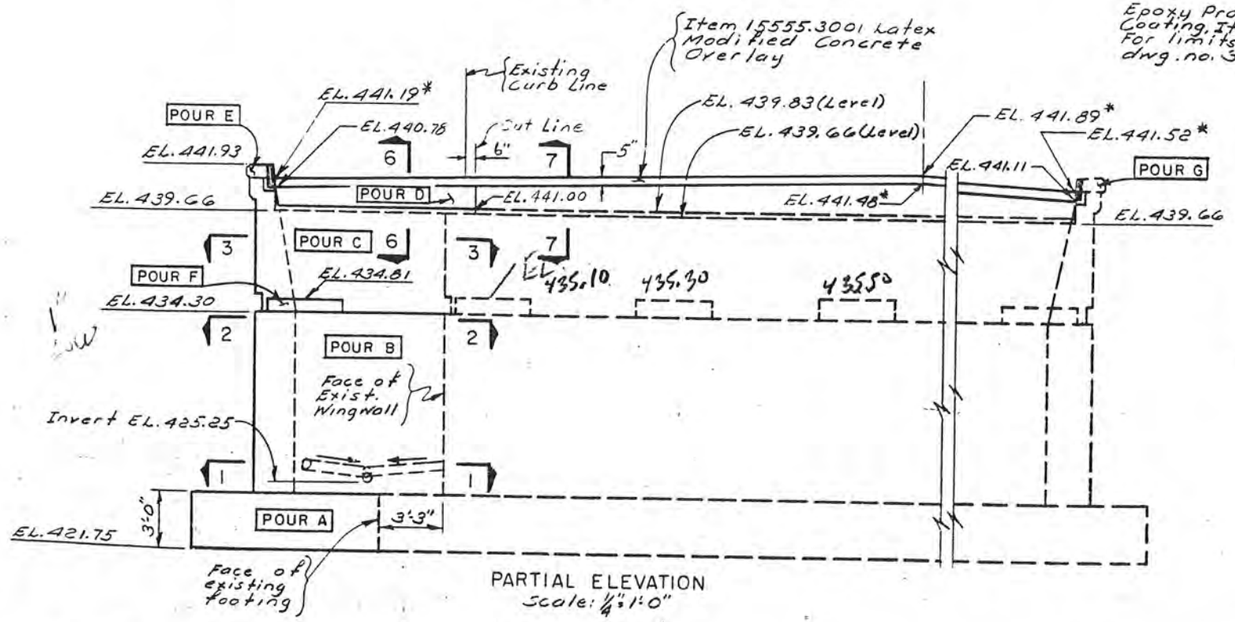

PARTIAL ELEVATION
Scale: ¼"=1'-0"

NOTE

* The top of roadway elevations are shown using 1½" Latex Modified Concrete Overlay. If the High Density Concrete Overlay or a Latex Modified Concrete Overlay greater than 1½" is used the roadway elevations will have to be adjusted.

For Sections 1-1 Thru 7-7 see Drwg. No 7

For design purposes the foundation pressure on the extension does not exceed 2½ tons per square foot.

STATE OF NEW YORK
DEPARTMENT OF TRANSPORTATION
DIVISION OF DESIGN AND CONSTRUCTION

SOUTHBOUND I-481 OVER
N.Y.S. THRUWAY

NORTH ABUTMENT
PROPOSED (1 OF 2)

PROJ. ENG. Ed Burns | DATE MADE

D 1790 (7/80)

D250094

FED. RD. REG. NO.	STATE	FEDERAL AID PROJECT NO.	SHEET NO.	TOTAL SHEETS
	NEW YORK	I-481-2(152)	295	312

Interstate Rte. 571 Extension (I-481)
Collamer Interchange to Northern Blvd.
Onondaga County

CAPITAL PROJECT IDENTIFICATION NO.

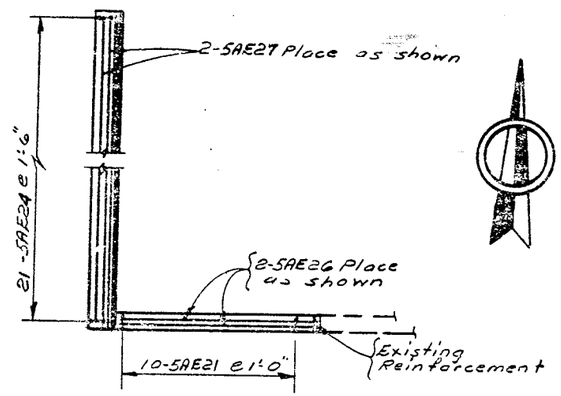

PLAN
HEADER & OVERLAY
Scale 1/4"=1'-0"

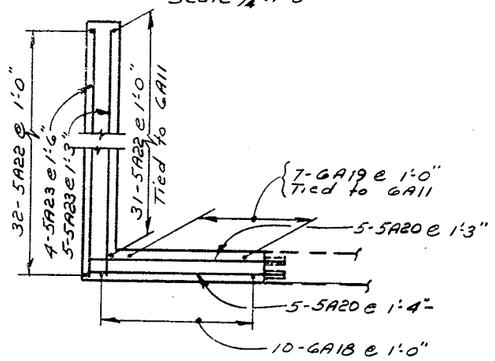

SECTION 3-3
Scale: 1/4"=1'-0"

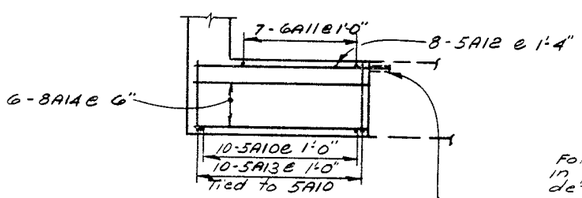

SECTION 2-2
Scale: 1/4"=1'-0"

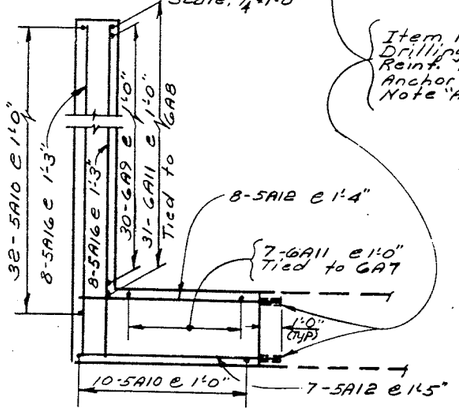

SECTION 1-1
Scale: 1/4"=1'-0"

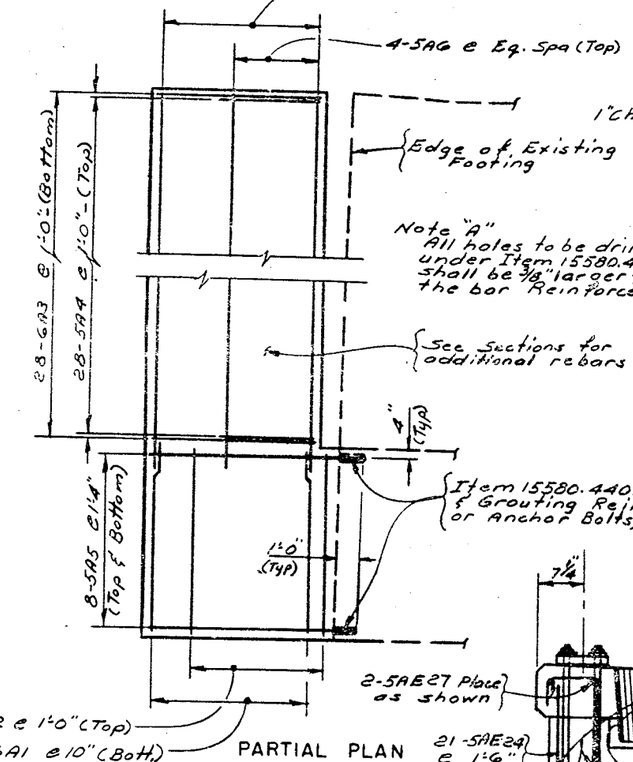

Note "A"
All holes to be drilled under Item 15580.4401 shall be 3/8" larger than the bar Reinforcement

Item 15580.4401 Drilling & Grouting Reinf. Bars or Anchor Bolts, See Note "A"

PARTIAL PLAN
FOOTING
Scale 1/4"=1'-0"

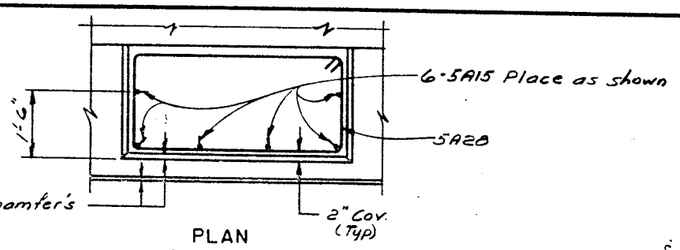

PLAN
PEDESTAL

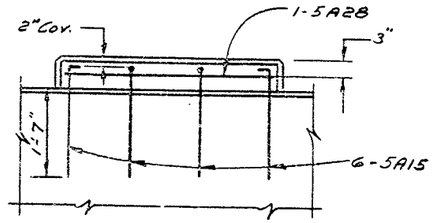

ELEVATION
PEDESTAL
Scale: 3/4"=1'-0"

Note:
For details of Railing Anchorage See dwg no. 17

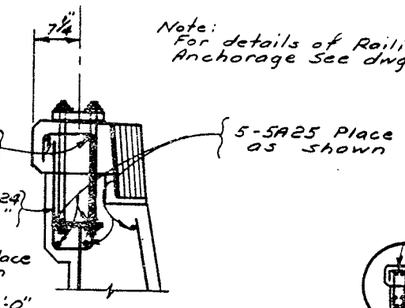

DETAIL "B"
Scale: 1 1/2"=1'-0"

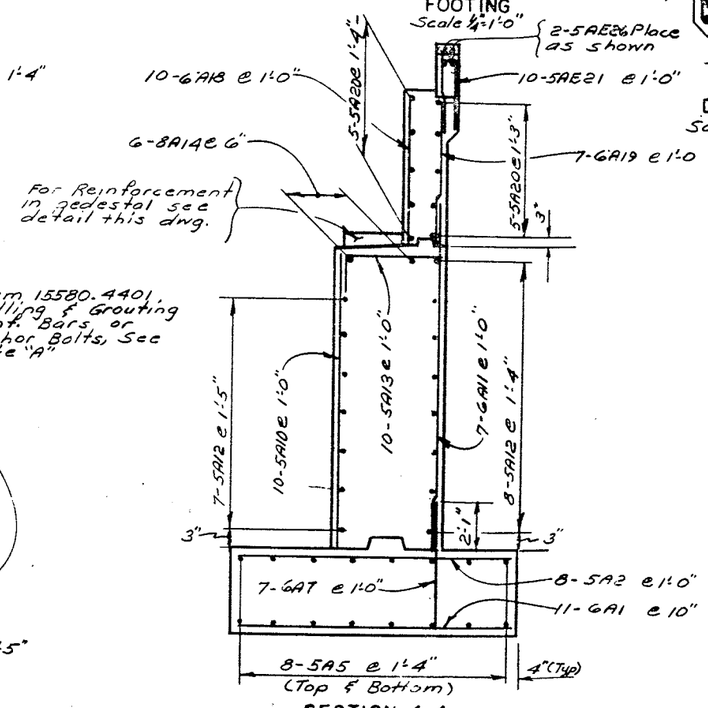

SECTION 4-4
Scale: 3/8"=1'-0"

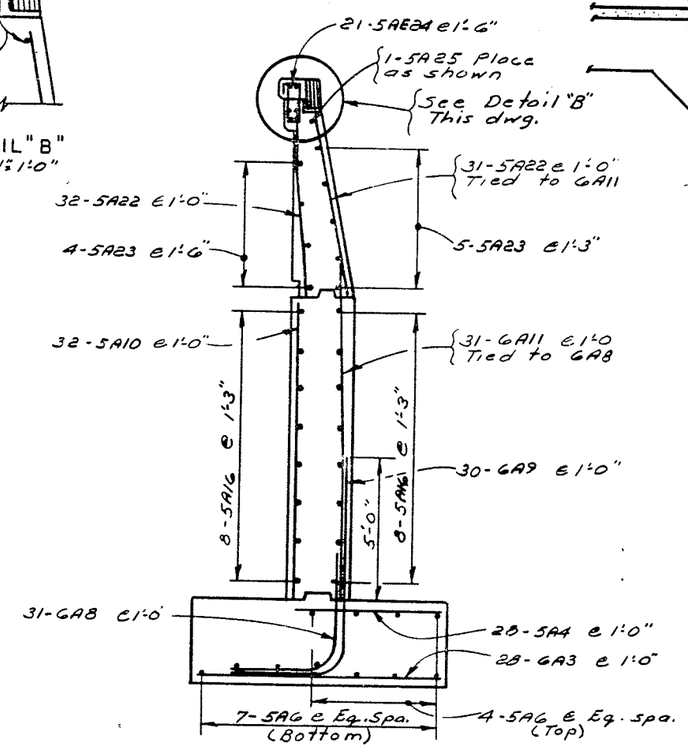

SECTION 5-5
Scale: 3/8"=1'-0"

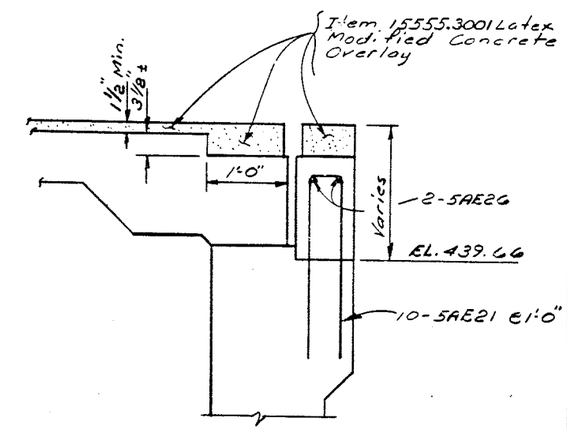

SECTION 6-6
Scale: 1"=1'-0"

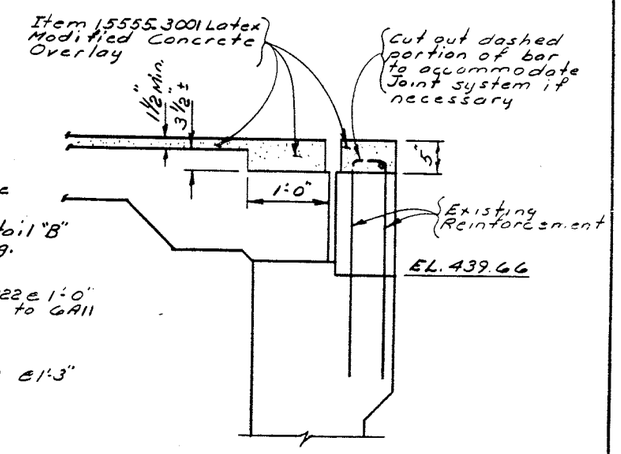

SECTION 7-7
Scale: 1"=1'-0"

Note
For location of Section 1-1 thru 7-7 See dwg no. 6

STATE OF NEW YORK
DEPARTMENT OF TRANSPORTATION
DIVISION OF DESIGN AND CONSTRUCTION

SOUTHBOUND I-481 OVER
N.Y.S. THRUWAY

NORTH ABUTMENT
PROPOSED (2 OF 2)

PROJ. ENG. Ed Barry | DATE MADE

1093682 D250094

FED. RD. REG. NO.	STATE	FEDERAL AID PROJECT NO.	SHEET NO.	TOTAL SHEETS
	NEW YORK	I-481-2(152)	296	312

Interstate Rte. 571 Extension (I-481)
Collamer Incerchange to Northern Blvd.
Onondaga County

CAPITAL PROJECT IDENTIFICATION NO.

NOTE:
For details of Bearing and Anchor Bolts see Drawing No. 16

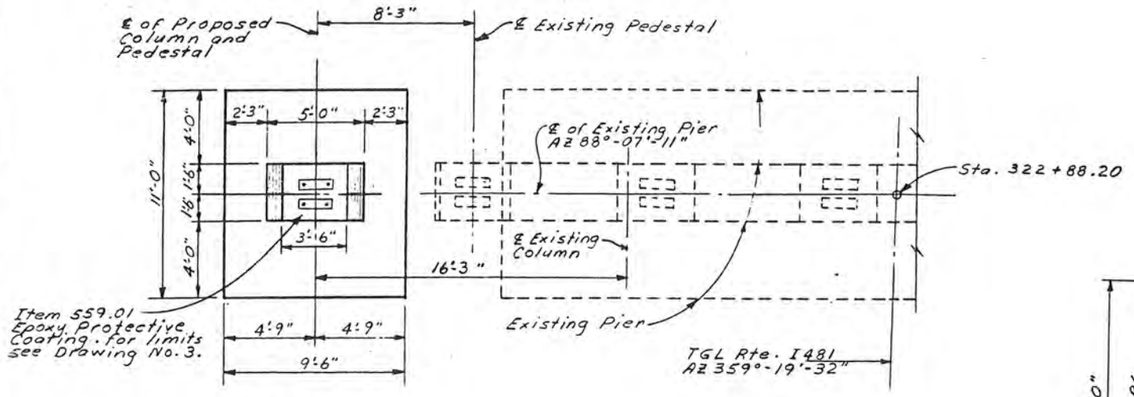

PLAN
Scale 1/4" = 1'-0"

	CONCRETE	
LOCATION	ITEM 555.01	ITEM 555.02
FOOTING	—	11.61 C.Y.
COLUMN	9.15 C.Y.	—
PEDESTAL	.26 C.Y.	—
TOTAL	9.41 C.Y.	11.61 C.Y.

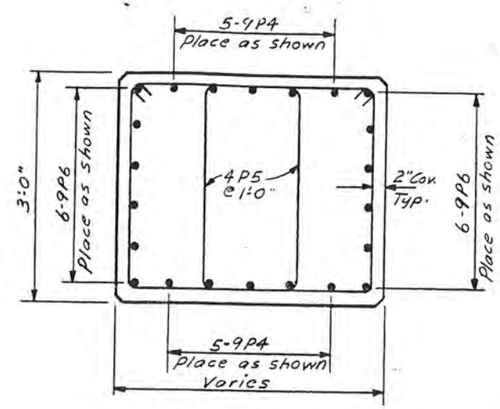

SECTION I-I
Not to Scale

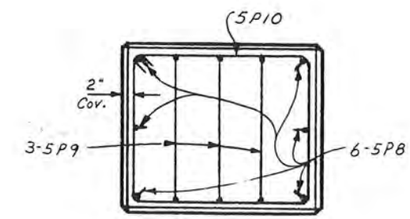

PLAN

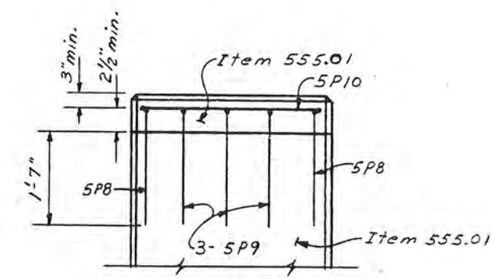

ELEVATION

PEDESTAL DETAILS
Not to Scale

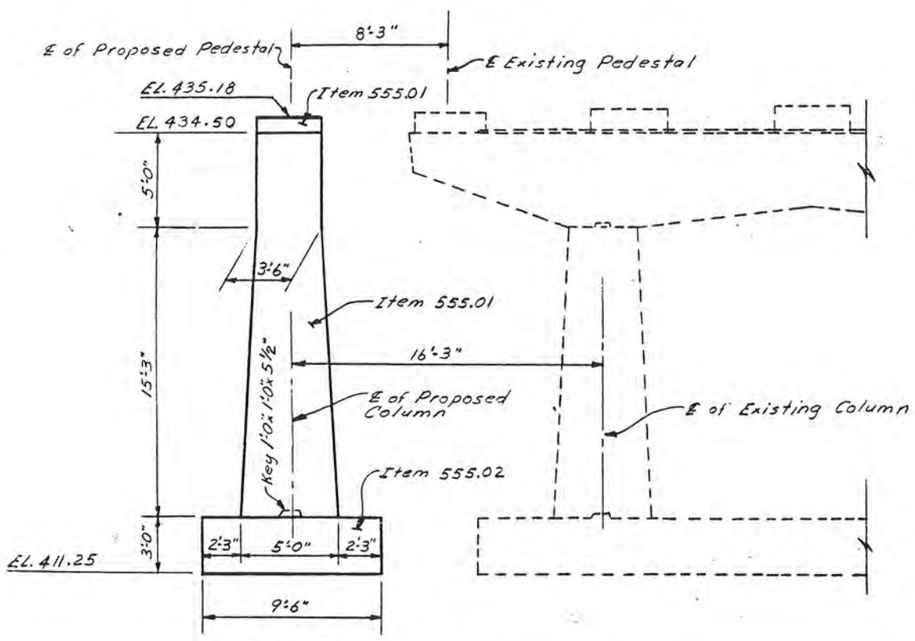

ELEVATION
Scale: 1/4" = 1'-0"

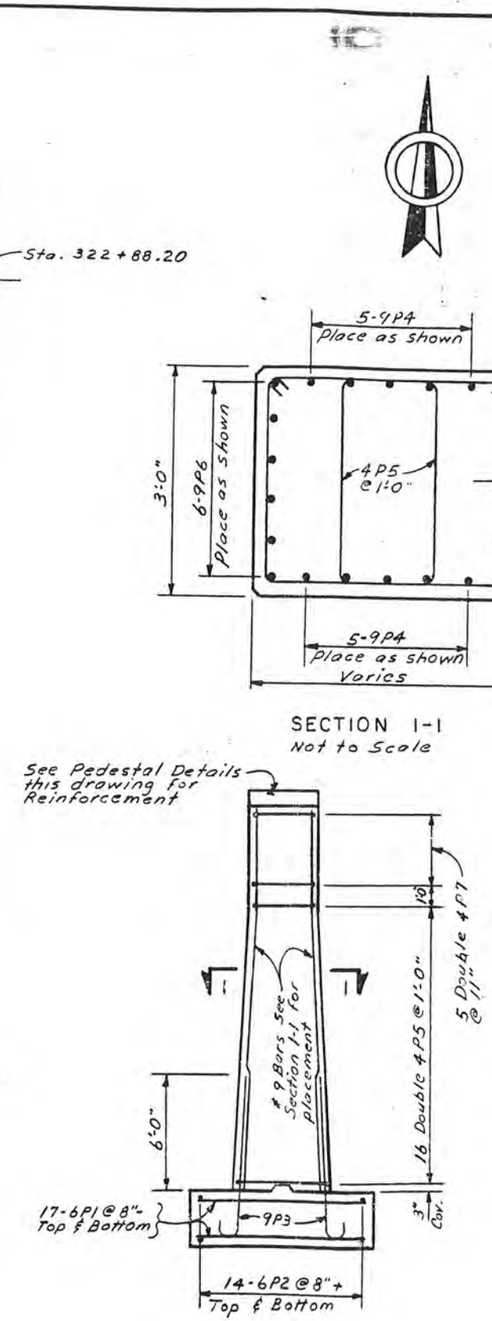

ELEVATION
Not to Scale

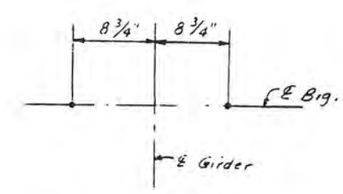

ANCHOR BOLT LAYOUT
Not to Scale

NOTES:

The Contractor's attention is directed to the possibility of the soil described as silty fine sand and silt; fine gravelly being easily disturbed by construction traffic and precipitation upon exposure. Provision is, therefore, made for an undercut to construct a working platform of compacted Item No. 203.21 at the proposed pier should this become necessary. The Regional Soils Engineer shall be notified to be present during the final foot of excavation to the proposed pier footing elevation. The Regional Soils Engineer shall inspect the exposed soil at the proposed pier footing elevation and determine the need for and extent of a one(1') foot under cut to construct a working platform of compacted Item No. 203.21. The undercut recommended by the Regional Soils Engineer shall not exceed one(1') foot without the prior approval of the Deputy Chief Engineer (Structures).

For design purposes the foundation pressure of the extension does not exceed 2½ Tons per square foot.

STATE OF NEW YORK
DEPARTMENT OF TRANSPORTATION
DIVISION OF DESIGN AND CONSTRUCTION

SOUTHBOUND I-481 OVER
N.Y.S. THRUWAY

PIER

DETAIL CHECKED BY ____

BD 179a (7/68)

1093682
D250094

FED. RD. REG. NO.	STATE	FEDERAL AID PROJECT NO.	SHEET NO.	TOTAL SHEETS
	NEW YORK	I-481-2(152)	297	312

Interstate Rte. 571 Extension (I-481)
Collamer Interchange to Northern Blvd.
Onondaga County

CAPITAL PROJECT IDENTIFICATION NO.

Note:
* The removal limit (3½"±) is based on using 1½" overlay and a proposed 5" header (See Dwg. No. 21) If another overlay depth is used the 3½"± dimension will have to be adjusted.

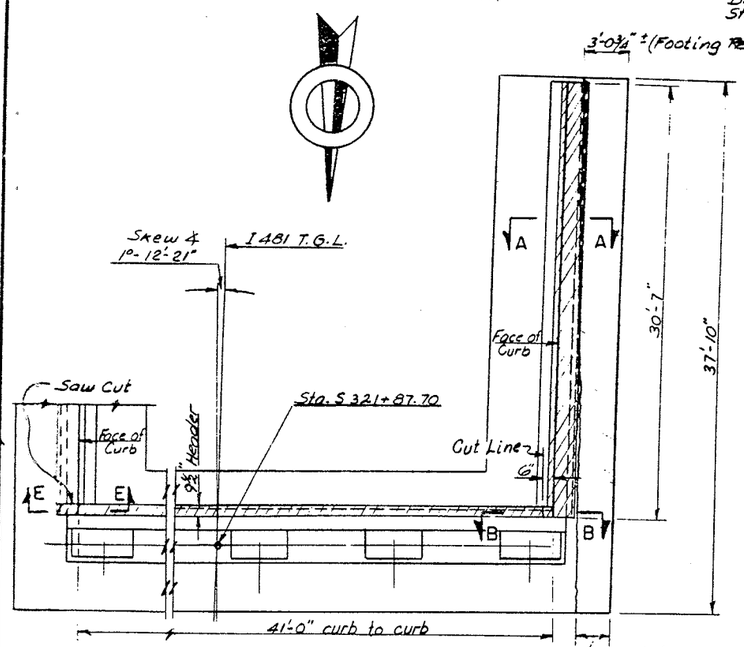

PARTIAL PLAN
Scale 3/16"=1'-0"

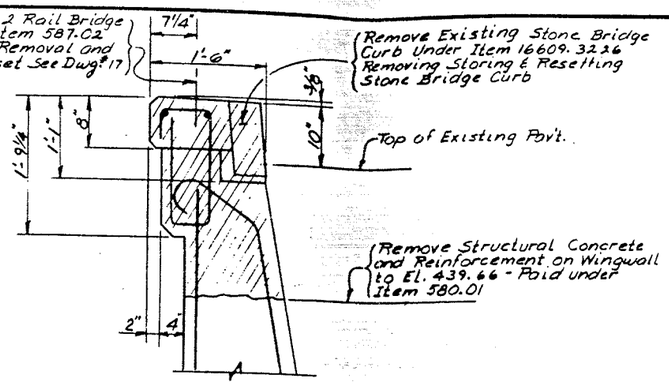

SECTION A-A
Scale 1" = 1'-0"

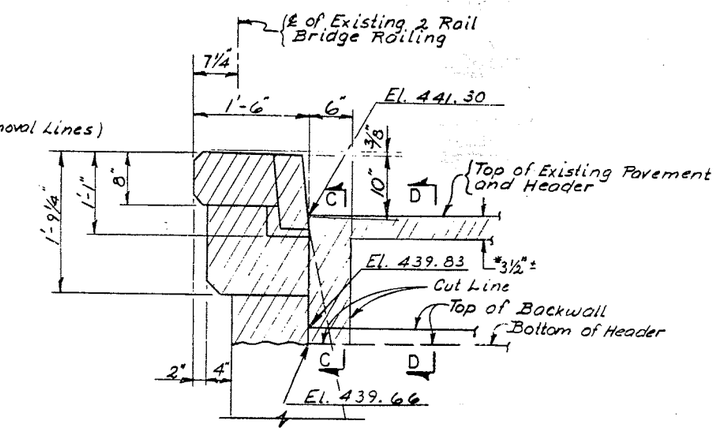

SECTION B-B
Scale 1" = 1'-0"

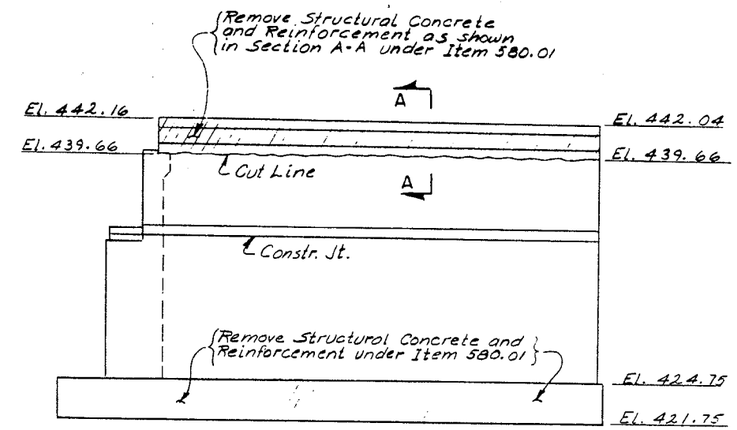

ELEVATION
SOUTHWEST WINGWALL
Scale 3/16" = 1'-0"

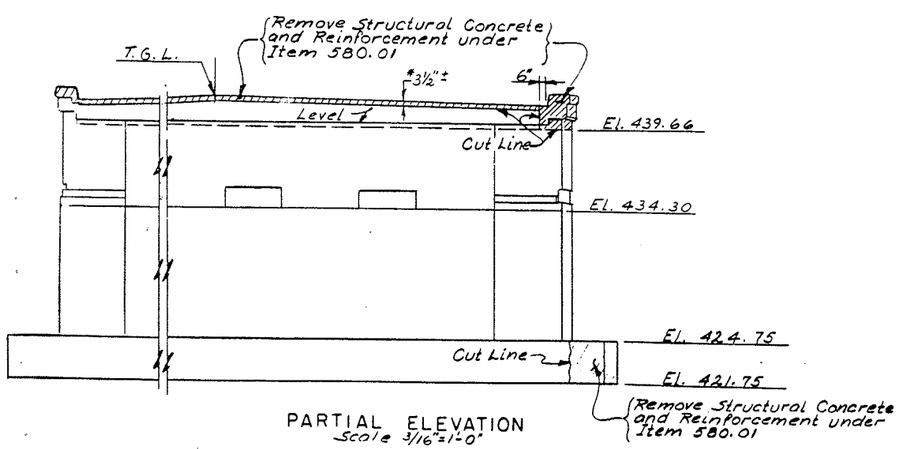

PARTIAL ELEVATION
Scale 3/16"=1'-0"

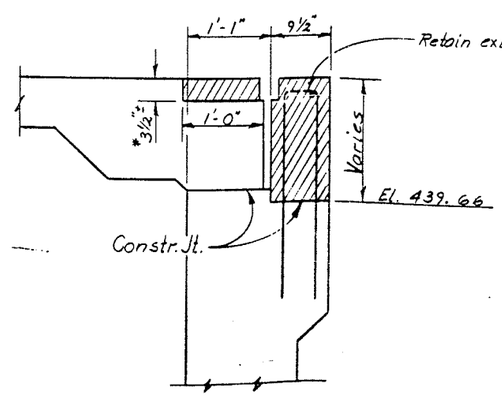

SECTION C-C
Scale 1" = 1'-0"

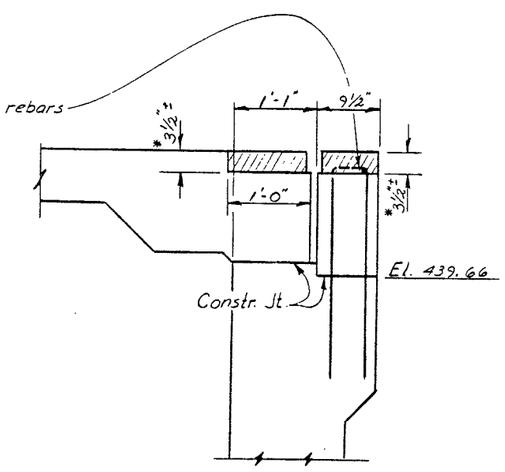

SECTION D-D
Scale 1" = 1'-0"

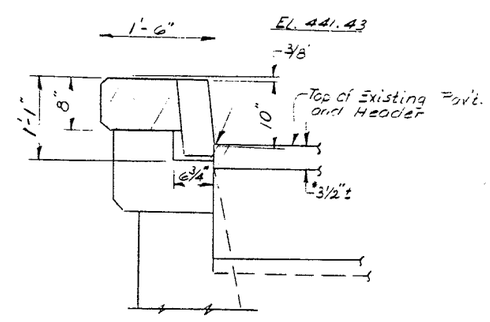

SECTION E-E
Scale 1" = 1'-0"

STATE OF NEW YORK
DEPARTMENT OF TRANSPORTATION
DIVISION OF DESIGN AND CONSTRUCTION

SOUTHBOUND I-481 OVER
N.Y.S. THRUWAY

SOUTH ABUTMENT
(REMOVAL)

BD 179a (7/86)

1093682

D250094

FED. RD. REG. NO.	STATE	FEDERAL AID PROJECT NO.	SHEET NO.	TOTAL SHEETS
	NEW YORK	I-481-2(152)	298	312

Interstate Rte. 571 Extension (I-481)
Collamer Interchange to Northern Blvd.
Onondaga County

CAPITAL PROJECT IDENTIFICATION NO.

ANCHOR BOLT LAYOUT

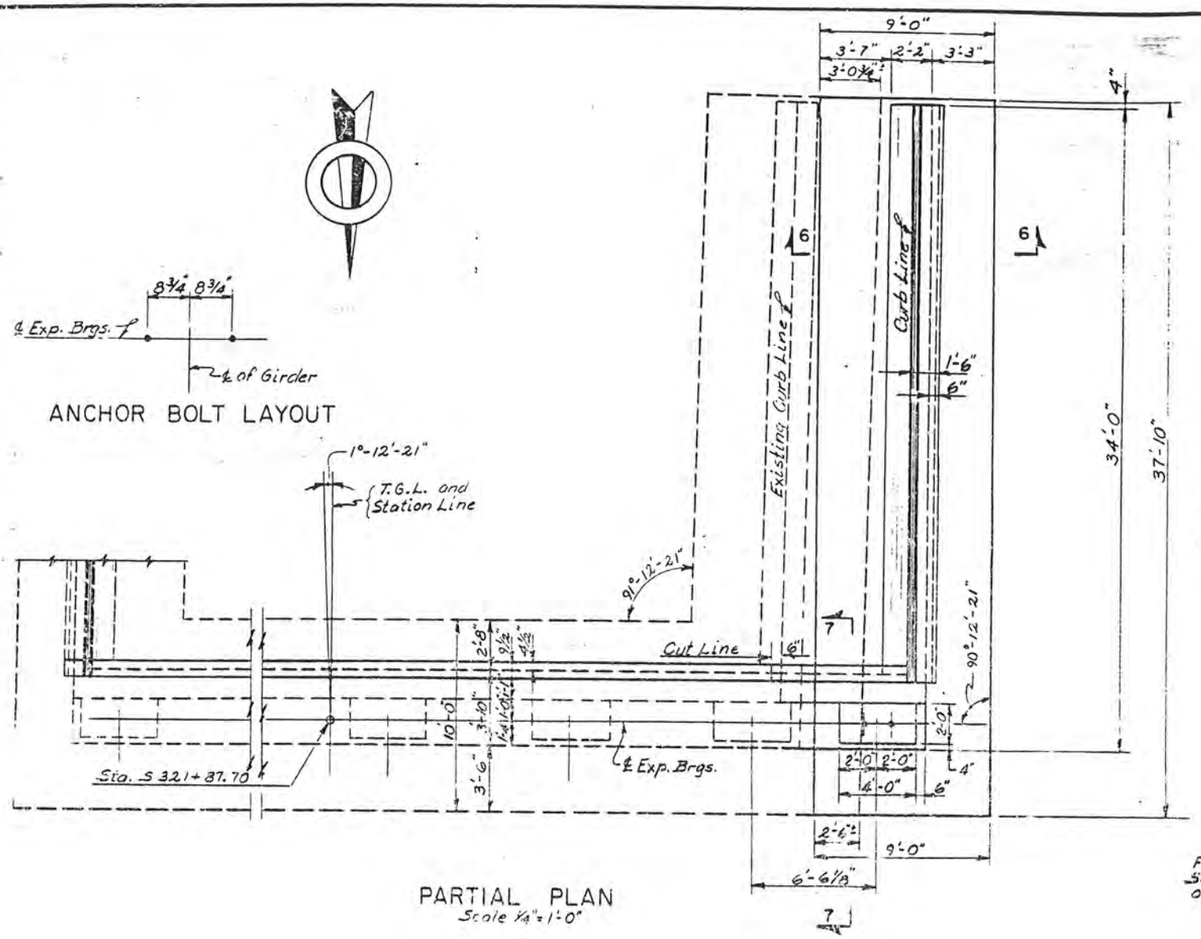

PARTIAL PLAN
Scale ¼"=1'-0"

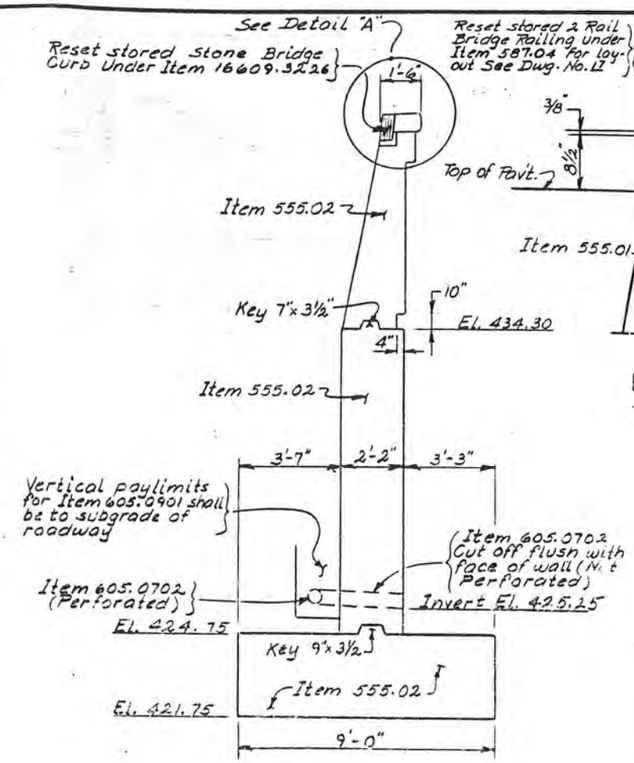

TYPICAL WINGWALL SECTION
Scale 3/8"=1'-0"

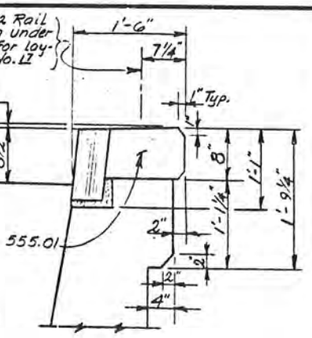

DETAIL "A"
Scale 1"=1'-0"

SOUTH ABUTMENT		
LOCATION	ITEM 555.01	ITEM 555.02
POUR A	——	37.83 C.Y.
POUR B	——	31.98 C.Y.
POUR C	——	13.65 C.Y.
POUR D	0.26 C.Y.	——
POUR E	0.18 C.Y.	——
POUR F	0.81 C.Y.	——
POUR G	0.02 C.Y.	——
TOTAL	1.27 C.Y.	83.46 C.Y.

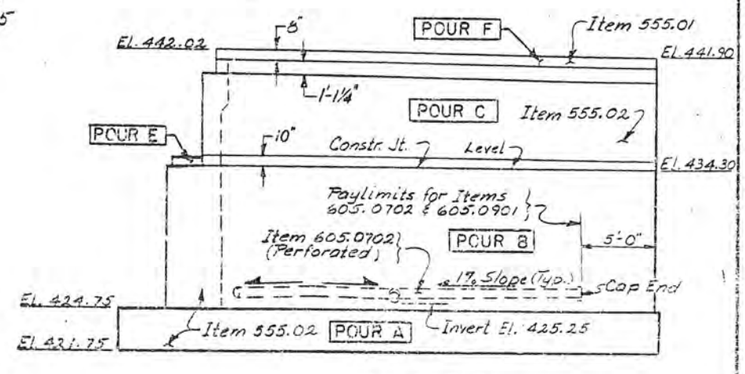

ELEVATION
SOUTHWEST WINGWALL
Scale 3/16"=1'-0"

Note: Joint System Not Shown. For Details of Joint See Dwg. No. 21 & 22

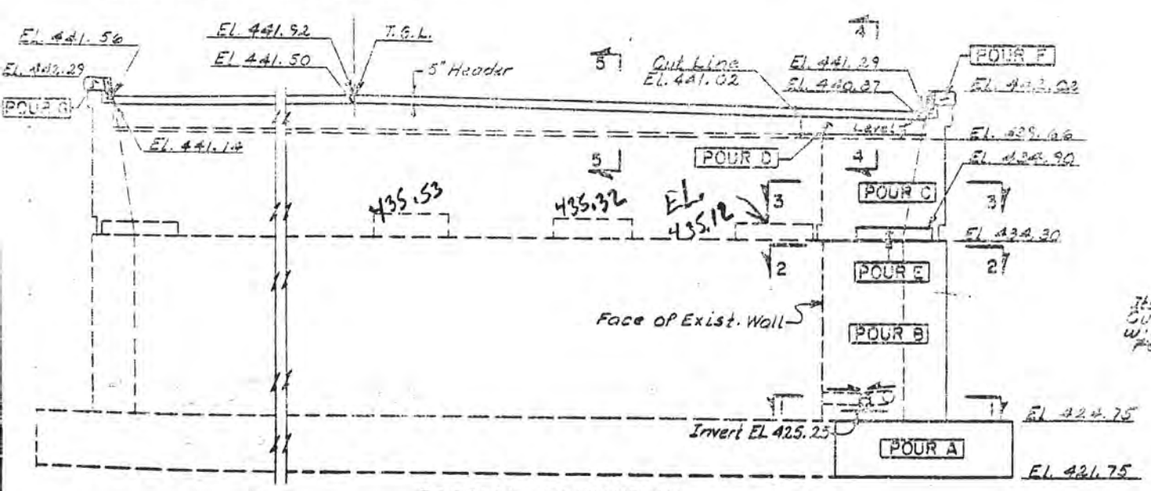

PARTIAL ELEVATION
Scale ¼"=1'-0"

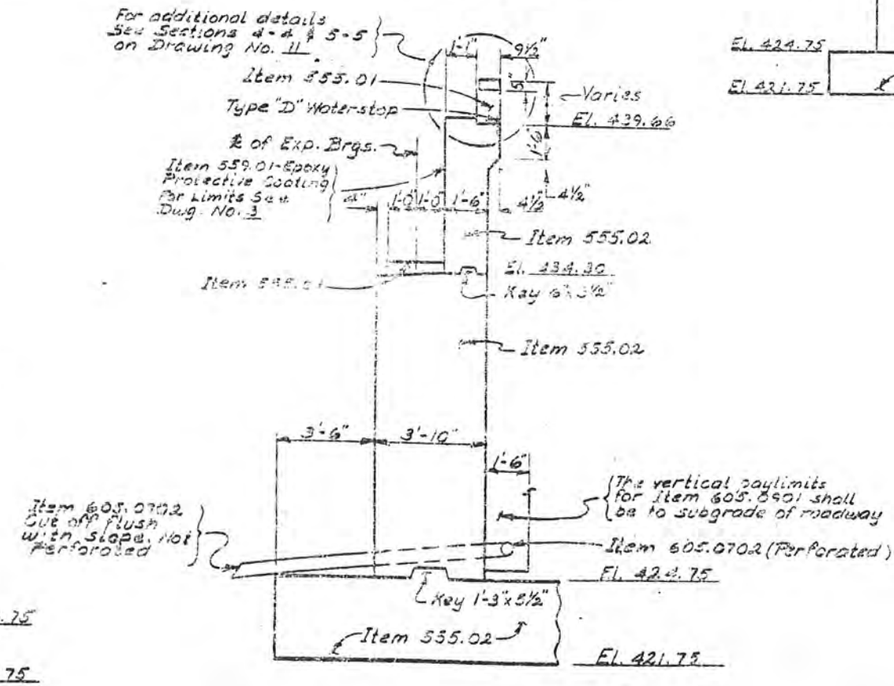

TYPICAL ABUTMENT SECTION
Scale 3/8"=1'-0"

Notes:

The top of roadway elevations are shown using 1½" Latex Modified Overlay. If the High Density Concrete Overlay or a Latex Modified Overlay greater than 1½" is used the roadway elevations will have to be adjusted.

For Sections 1-1 thru 7-7 See Dwg. No. 11

For design purposes the foundation pressure for the extension does not exceed 2½ tons per square foot.

STATE OF NEW YORK
DEPARTMENT OF TRANSPORTATION
DIVISION OF DESIGN AND CONSTRUCTION

SOUTHBOUND I-481 OVER N.Y.S. THRUWAY

SOUTH ABUTMENT
PROPOSED (1 OF 2)

PROJ. ENG. | DATE MADE

BD 1798 (7/88)

109368R

D250094

FED. RD. REG. NO.	STATE	FEDERAL AID PROJECT NO.	SHEET NO.	TOTAL SHEETS
	NEW YORK	I-481-2(152)	299	312

Interstate Rte. 571 Extension (I-481)
Collamer Interchange to Northern Blvd.
Onondaga County

CAPITAL PROJECT IDENTIFICATION NO.

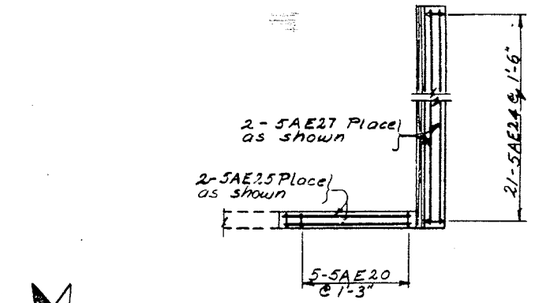

PLAN
HEADER & OVERLAY

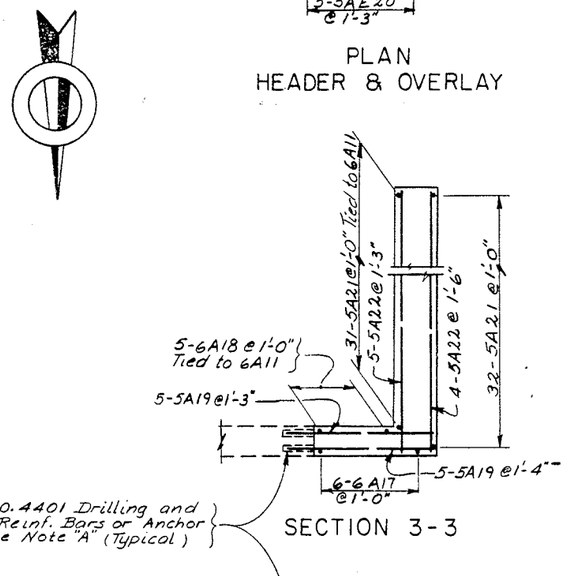

SECTION 3-3

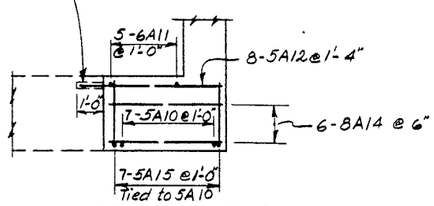

SECTION 2-2

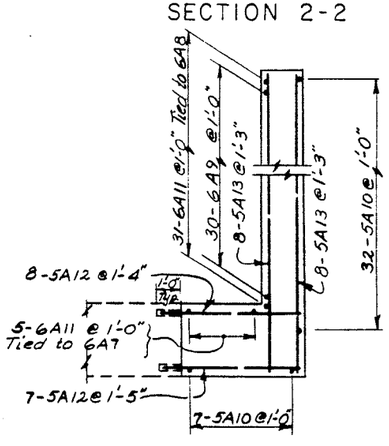

SECTION 1-1

Note "A"
All holes to be drilled under Item 15580.4401 shall be 3/8" ϕ larger than the bar reinforcement.

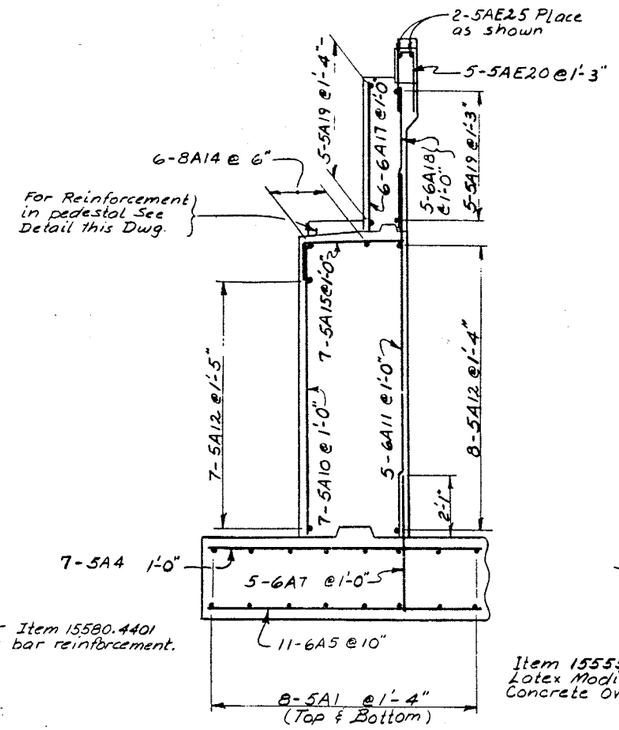

SECTION 7-7

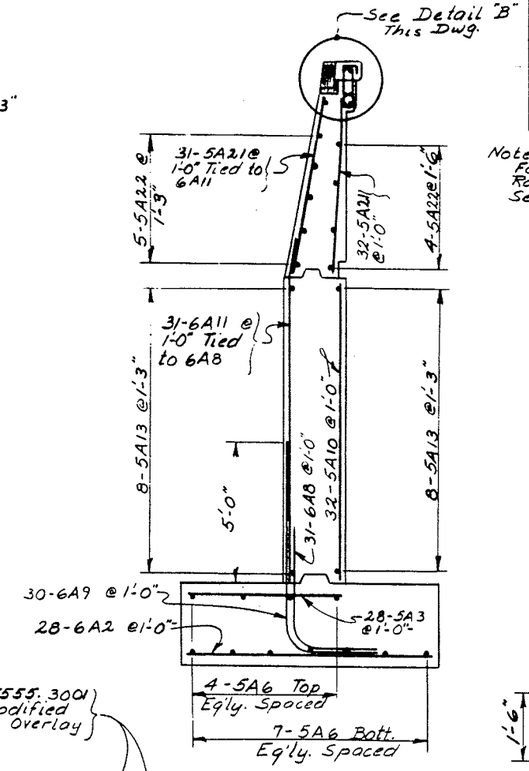

SECTION 6-6

Note:
For details of Railing Anchorage See Dwg. No. 17

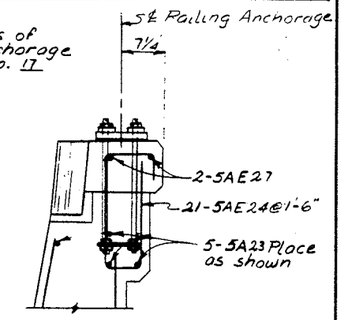

DETAIL "B"

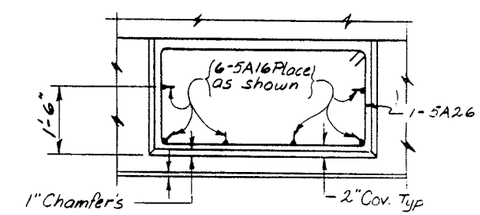

PLAN
PEDESTAL

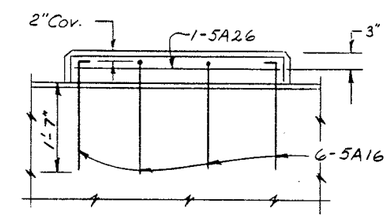

ELEVATION
PEDESTAL

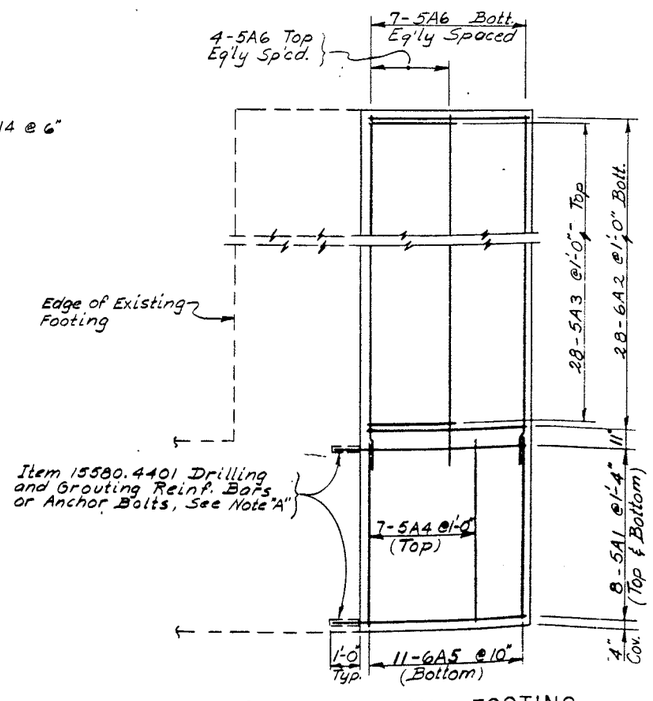

PARTIAL PLAN - FOOTING

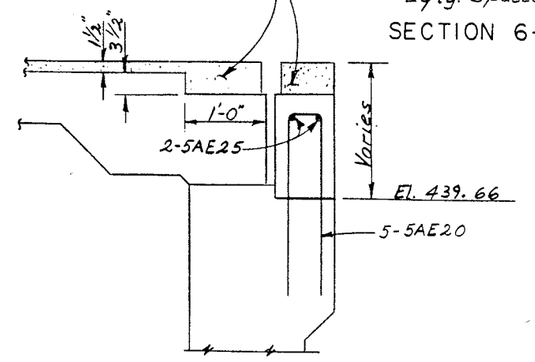

SECTION 4-4

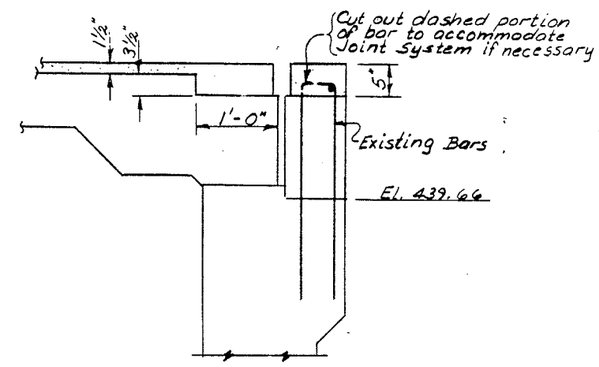

SECTION 5-5

Note: For location of Sections 1-1 thru 7-7 See Dwg. No. 10

STATE OF NEW YORK
DEPARTMENT OF TRANSPORTATION
DIVISION OF DESIGN AND CONSTRUCTION

SOUTHBOUND I-481 OVER
N.Y.S. THRUWAY

SOUTH ABUTMENT
PROPOSED (2 OF 2)

PROJ. ENG.

FED. RD. REG. NO.	STATE	FEDERAL AID PROJECT NO.	SHEET NO.	TOTAL SHEETS
	NEW YORK	I-481-2(152)	300	312

Interstate Rte. 571 Extension (I-481)
Collamer Interchange to Northern Blvd.
Onondaga County

CAPITAL PROJECT IDENTIFICATION NO. 3107.00-114-77

1093682

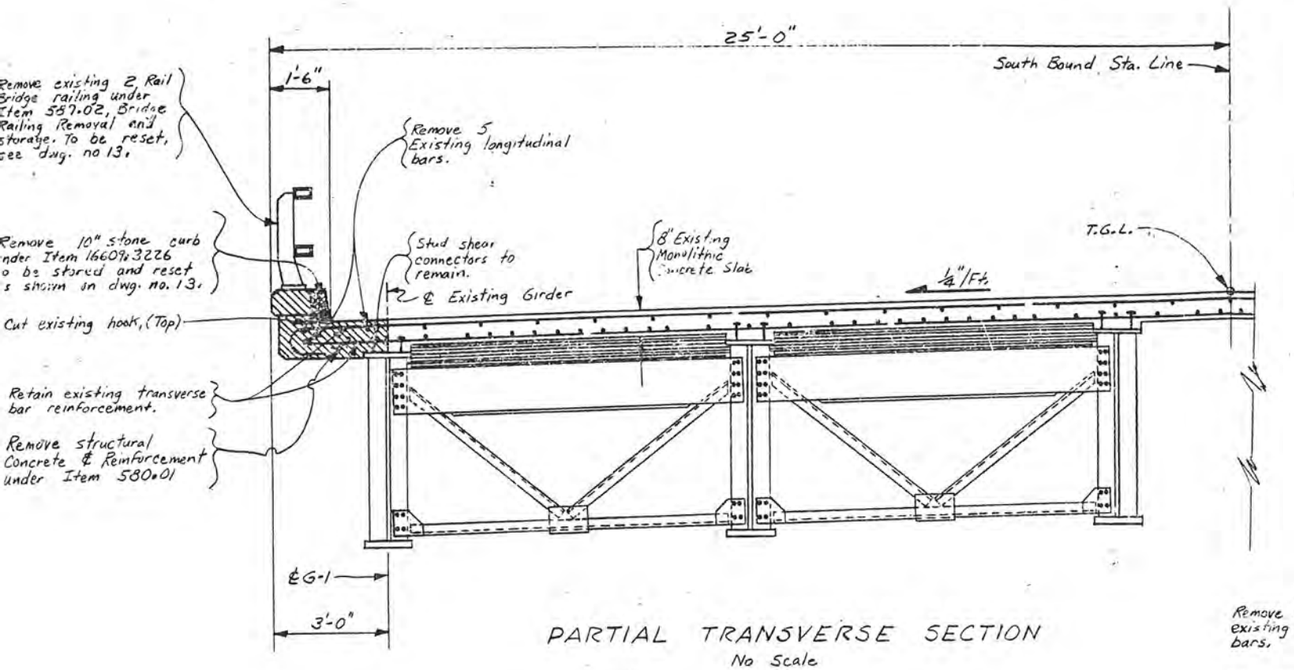

PARTIAL TRANSVERSE SECTION
No Scale

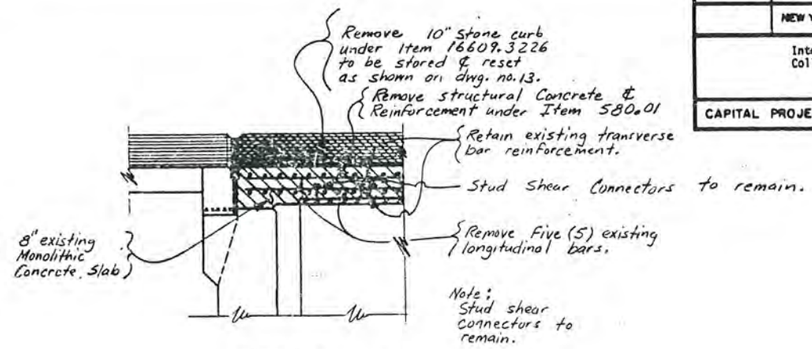

SECTION A-A
No Scale

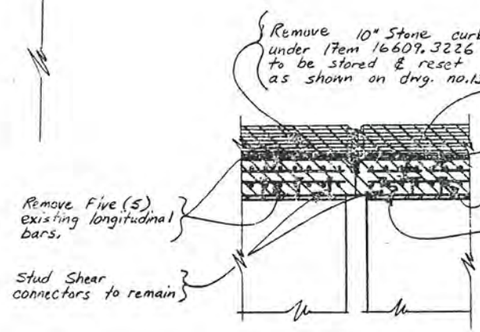

SECTION B-B
No Scale

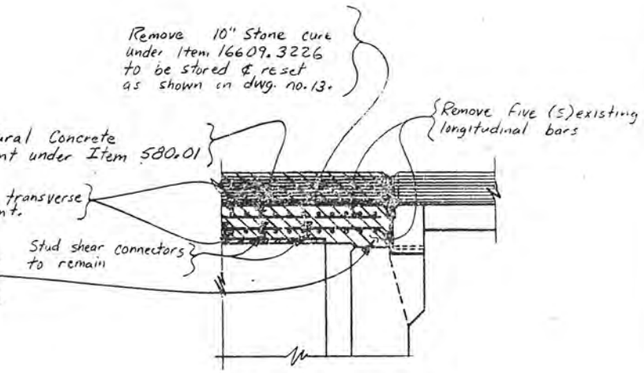

SECTION C-C
No Scale

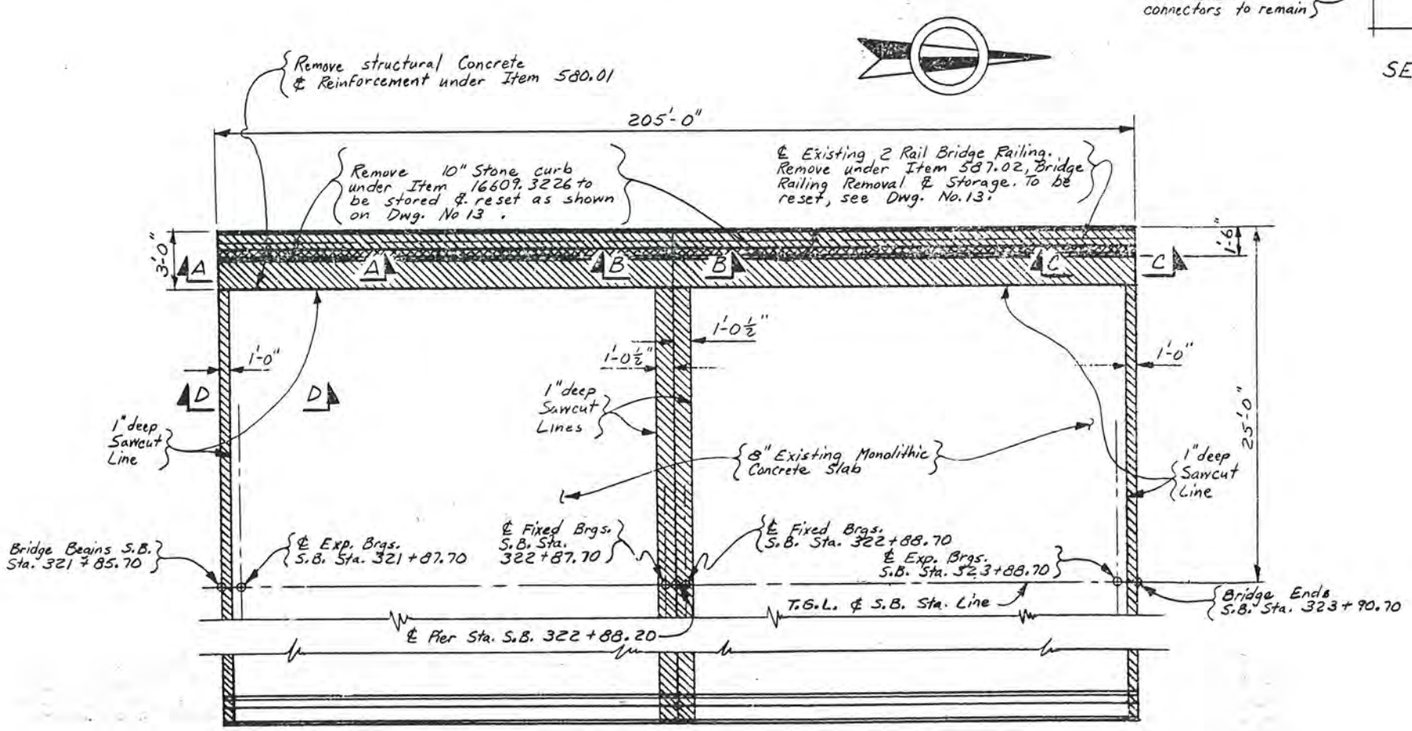

PARTIAL PLAN
No Scale

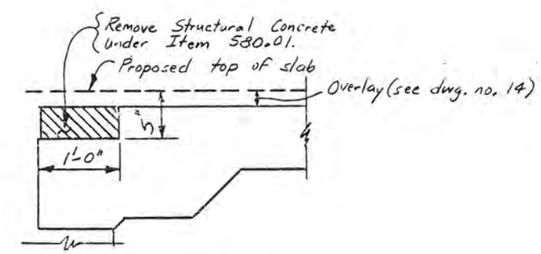

SECTION D-D
No Scale

Denotes Limits for Removal Items

STATE OF NEW YORK
DEPARTMENT OF TRANSPORTATION
DIVISION OF DESIGN AND CONSTRUCTION

SOUTHBOUND I-481 OVER
N.Y.S. THRUWAY

SUPERSTRUCTURE
(REMOVAL)
(1 OF 4)

PROJ. ENG.	DATE MADE 11-13-80
SQUAD	DRAWING NO. 12 OF 24

BD 179a (7/80)

D250094

FED. RD. REG. NO.	STATE	FEDERAL AID PROJECT NO.	SHEET NO	TOTAL SHEETS
	NEW YORK	I-481-2(152)	3C1	312

Interstate Rte. 571 Extension (I-481)
Collamer Interchange to Northern Blvd.
Onondaga County

1093682

CAPITAL PROJECT IDENTIFICATION NO. 3107.00-114-77

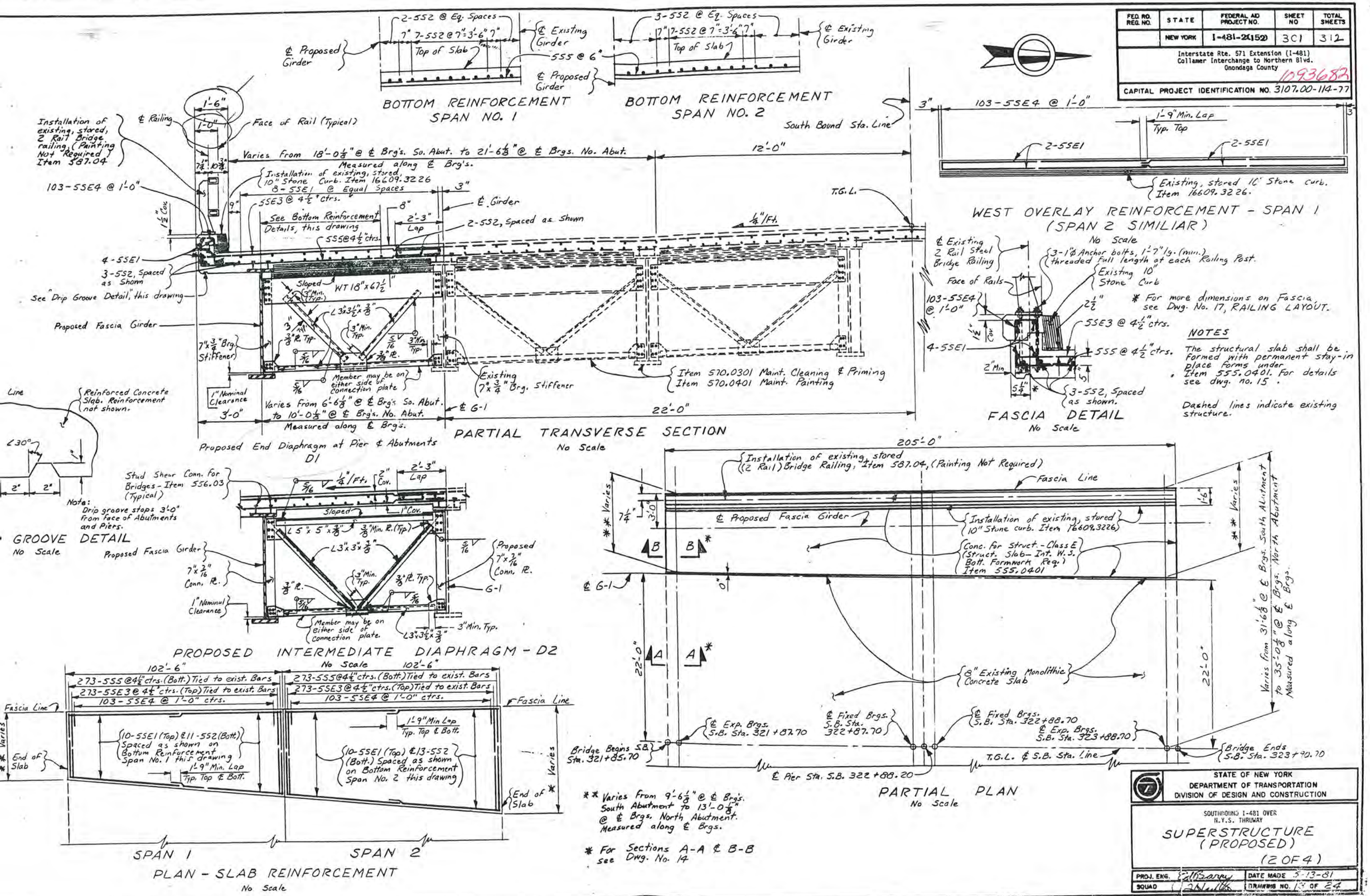

STATE OF NEW YORK
DEPARTMENT OF TRANSPORTATION
DIVISION OF DESIGN AND CONSTRUCTION

SOUTHBOUND I-481 OVER N.Y.S. THRUWAY

SUPERSTRUCTURE (PROPOSED)

(2 OF 4)

PROJ. ENG.	DATE MADE 5-13-81
SQUAD	DRAWING NO. 12 OF 24

D250094

FED. RD. REG. NO.	STATE	FEDERAL AID PROJECT NO.	SHEET NO.	TOTAL SHEETS
	NEW YORK	I-481-2(152)	302	312

Interstate Rte. 571 Extension (I-481)
Collamer Interchange to Northern Blvd.
Onondaga County

CAPITAL PROJECT IDENTIFICATION NO. 3107.00-114-77

1093682

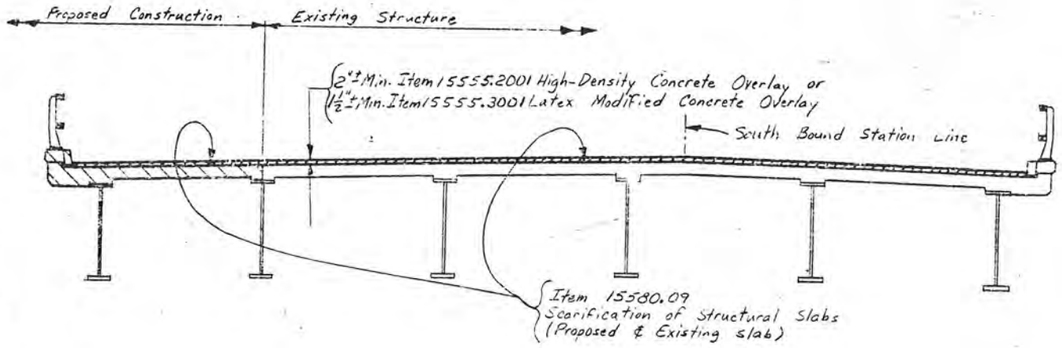

TRANSVERSE SECTION
No Scale

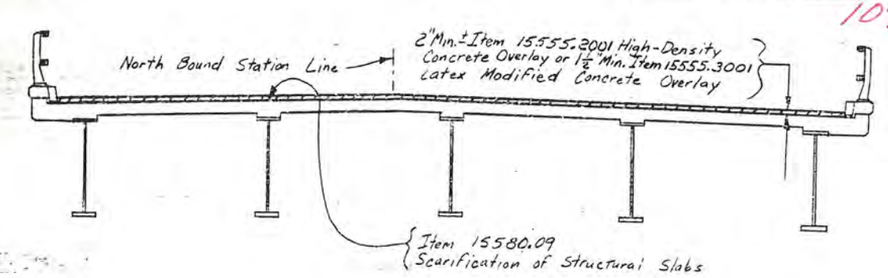

TRANSVERSE SECTION
No Scale

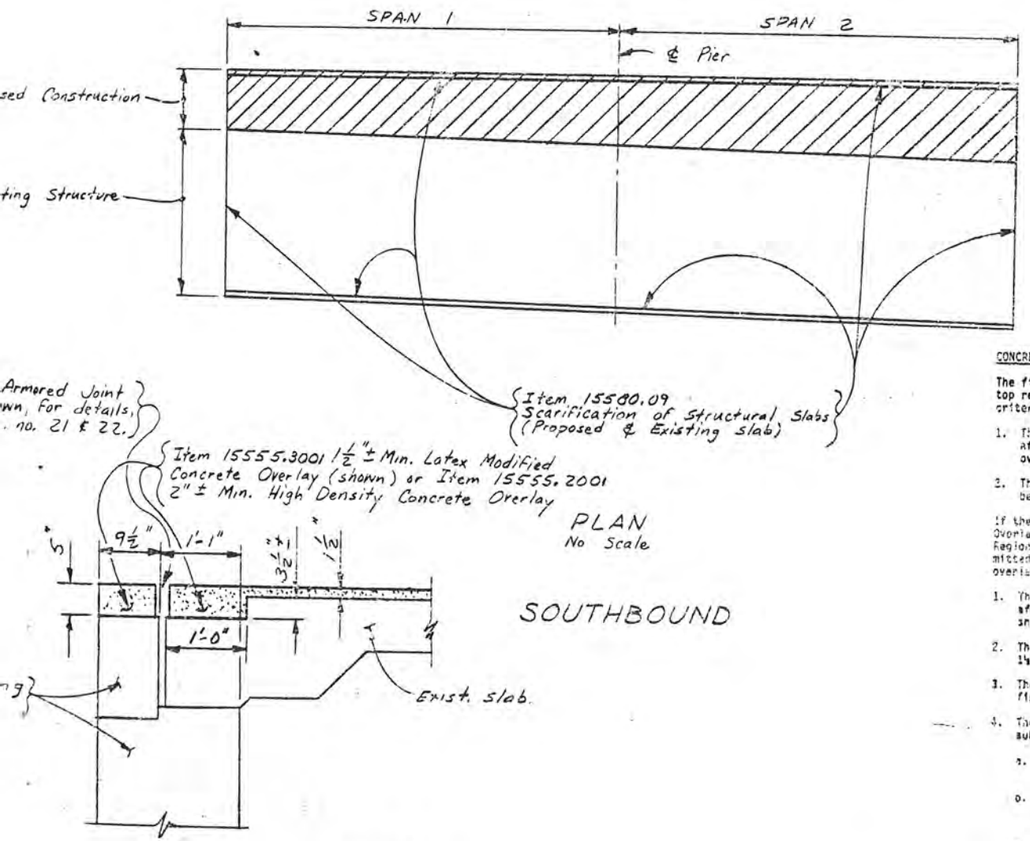

CONCRETE OVERLAY NOTES

The finished overlay profiles for these structures are based on the existing top reinforcing bar cover (shown elsewhere in the plans) using the following criteria:

1. The minimum total cover (cover remaining over the reinforcing bars after the concrete removal (if any) plus the thickness of the new overlay material) shall be 2¼ inches.
2. The minimum thickness of the High Density Concrete Overlay shall be 2 inches.

If the Contractor has elected to bid on Item 15555.3001 Latex Modified Concrete Overlay, then the Contractor may submit a proposed finished profile to the Regional Director for approval. The proposed finished profile shall be submitted to the Regional Director at least two weeks before placement of the overlay and shall be based on the following criteria:

1. The minimum total cover (cover remaining over the reinforcing bars after the removal plus the thickness of the new overlay material) shall be 2¼".
2. The minimum thickness of the Latex Modified Concrete Overlay shall be 1½ inches.
3. The transition lengths between the existing profile and proposed finished profile shall be of the same lengths as shown on the plans.
4. The Contractor's proposal may include additional grade transitions subject to the following:
   a. The minimum length between grade transitions shall be 60 feet.
   b. The slope of the grade transition shall not differ from the slope of the adjacent sections by more than .005% at the completion of the work.
   c. The slope changes do not create drainage problems on the bridge deck.

No overlay material shall be placed until the Regional Director has approved a satisfactory proposed finished profile.

* For location of Sections A-A & B-B see Drawing No. 13.

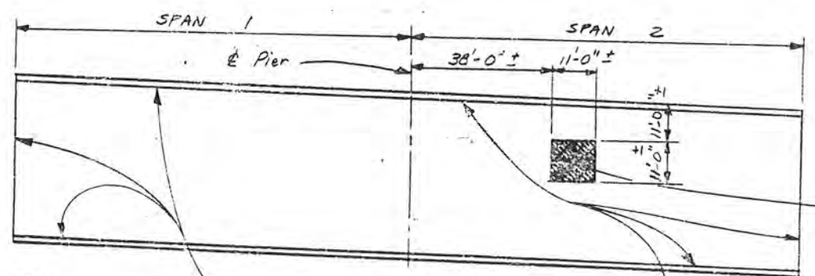

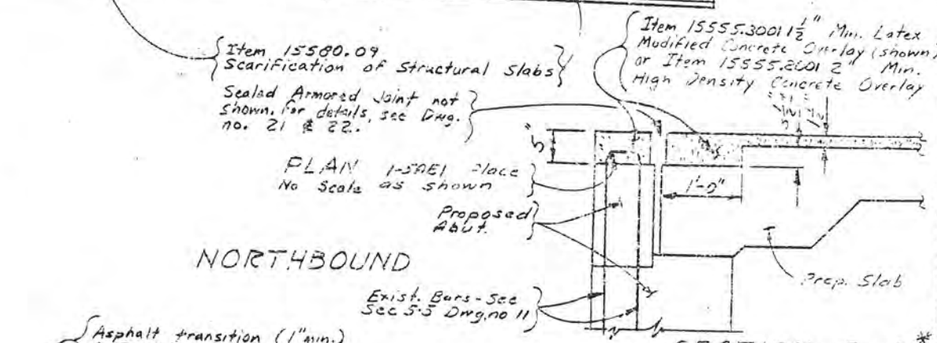

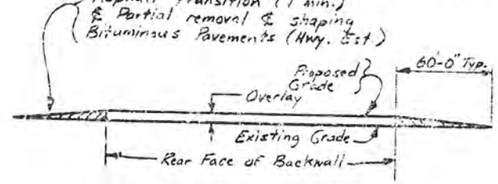

LONGITUDINAL SECTION
No Scale

STATE OF NEW YORK
DEPARTMENT OF TRANSPORTATION
DIVISION OF DESIGN AND CONSTRUCTION

NO. 5 OF I-481 OVER
N.Y.S. THRUWAY

SUPERSTRUCTURE
CONCRETE OVERLAY
(3 OF 4)

PROJ. ENG. [illegible] | DATE MADE 5-28-81
DRAWN [illegible] | DRAWING NO. 14 OF 24

1093682

D250094

FED. RD. REG. NO.	STATE	FEDERAL AID PROJECT NO.	SHEET NO.	TOTAL SHEETS
	NEW YORK	I-481-2(152)	303	312

Interstate Rte. 571 Extension (I-481)
Collamer Interchange to Northern Blvd.
Onondaga County

CAPITAL PROJECT IDENTIFICATION NO.

Welding Notes
* F.P.G.W. = Full Penetration Groove Weld
M.B. = Mill to Bear

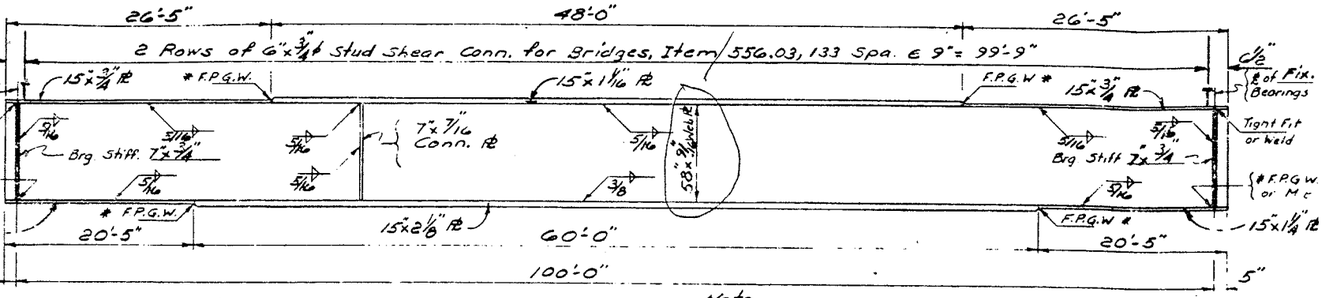

GIRDER DETAIL
Not to Scale

Note
Flange Thickness Transition Shall conform to New York State Steel Construction Manual.

MOMENT & SHEAR TABLE

			℄ BRG	MID PT
PROPOSED FASCIA GIRDERS	D.L.	Moment	0	1709
		Shear	70	0
	S.D.L.	Moment	0	325
		Shear	13	0
	L.L.(+)	Moment	0	1552
		Shear	66.5	0

CAMBER TABLE

PROP. FASCIA GIRDERS	(1) Vertical Curve (ft).	.041
	(2) Steel D.L. (ft).	.032
	(3) Concrete D.L. (ft.)	.148
	(4) Superimposed D.L. (ft).	.021
	Total (ft)	.242

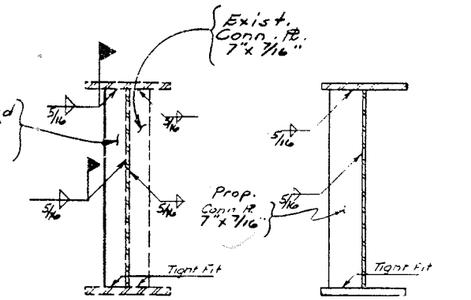

CONN. PL – EXIST. GIRDER CONN. PL – FASCIA GIRDER

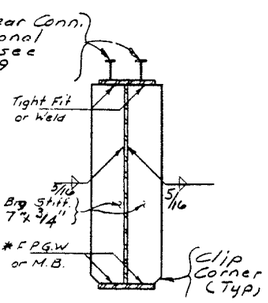

BRG. STIFF.
GIRDER SECTIONS
Not to Scale

DESIGN LOAD TABLE/GIRDER

	UNIT	LOAD / FT
D.L.	SLAB	.969 K/ft.
	HAUNCH	.039 K/ft.
	GIRDER	.247 K/ft.
	S.I.P. FORMS	.147 K/ft.
	DIAPHRAGMS	.030 K/ft
	TOTAL	1.432 K/ft.
S.D.L.	SAFETYWALK	.063 K/ft.
	RAILING	.013 K/ft.
	FUT. WEAR. SURF.	.184 K/ft.
	TOTAL	.260 K/ft.

Assumed Live Load = HS 20-44

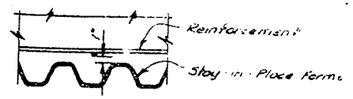

SECTION A-A
Not to Scale

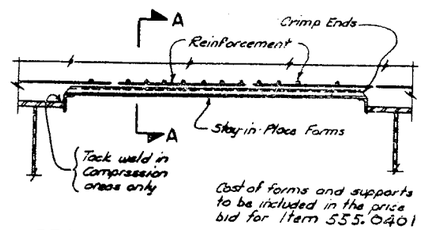

DETAILS OF STAY-IN-PLACE FORMS
Not to Scale

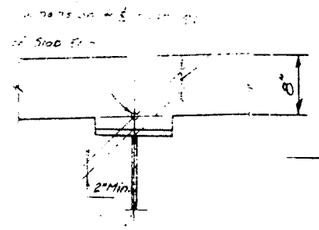

GIRDER HAUNCH DETAIL
Not to Scale

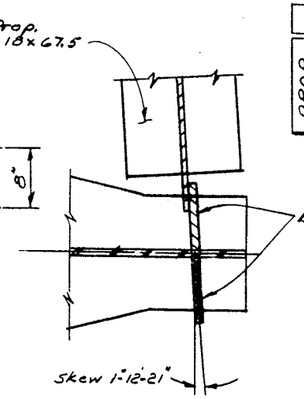

DETAIL "D"
Not to Scale

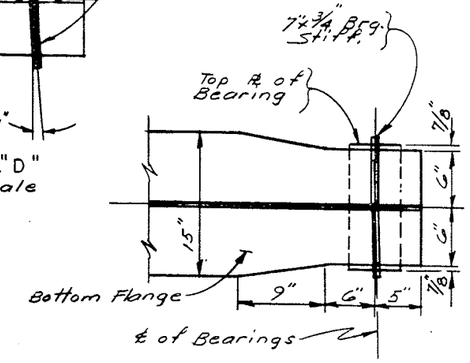

BOTTOM FLANGE TAPER
Not to Scale

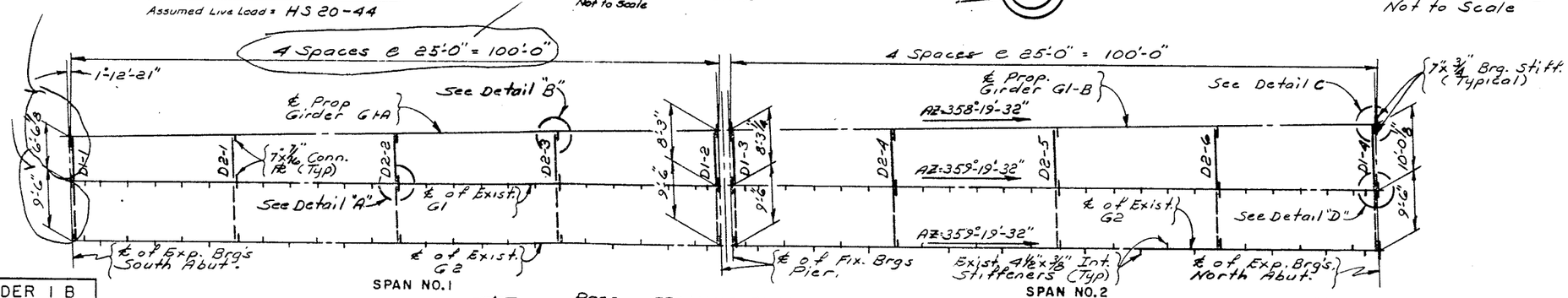

SPAN NO. 1 SPAN NO. 2

FRAMING PLAN
Not to Scale

	GIRDER 1 A			GIRDER 1 B		
	℄ BRG.	MID. PT.	℄ BRG.	℄ BRG.	MID. PT.	℄ BRG.
Bottom of Slab Elevation	440.51	440.61	440.63	440.63	440.56	440.41
Steel Elev. (Field Measure)						
Δ = S.D.L. Deflection	0	0.17 ft	0	0	0.17 ft	0
Haunch req'd (C) + (D) (ft.)						

eadt Load
Superimposed Dead Load
Live Load
Load moments and shears
ude impact.
ents are expressed as
kips
ars are expressed as kips.

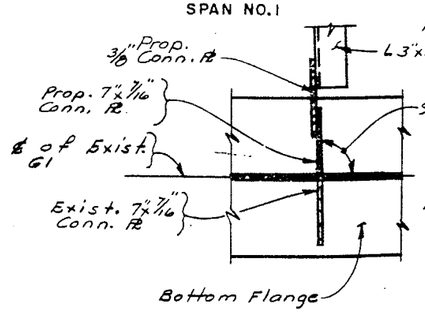

DETAIL "A"
Not to Scale

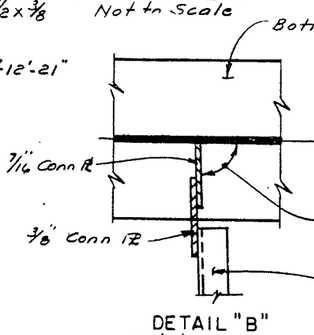

DETAIL "B"
Not to Scale

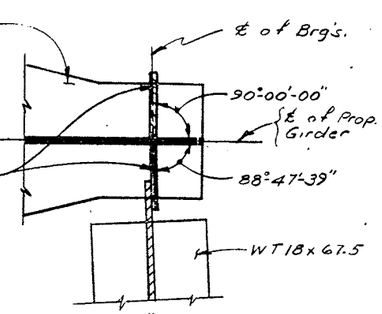

DETAIL "C"
Not to Scale

Notes
The ends of all girders and the bearing stiffeners shall be vertical. All connection plates may be perpendicular to the top flange for stud shear connector details see Dwg. No. 19.

All girder flanges and webs shall be ASTM A-572. All other detail steel shall be ASTM A-36.

All structural steel shall be paid for under Item 11.0506H.

The structural steel shall be cleaned and primed under Item 570.0101.

The final 2 coats of paint shall be paid for under Item 570.0201.

STATE OF NEW YORK
DEPARTMENT OF TRANSPORTATION
DIVISION OF CONSTRUCTION

SOUTHBOUND I-481 OVER
N.Y.S. THRUWAY

SUPERSTRUCTURE
(PROPOSED) (4 OF 4)

D250094

FED. RD. REG. NO.	STATE	FEDERAL AID PROJECT NO.	SHEET NO.	TOTAL SHEETS
	NEW YORK	I-481-2(152)	304	312

Interstate Rte. 571 Extension (I-481)
Collamer Interchange to Northern Blvd.
Onondaga County

CAPITAL PROJECT IDENTIFICATION NO.

1093682

NOTE:

Machine-finished sliding surfaces in contact shall receive one coat of any multi-purpose automotive grease as soon as machining is complete. The Contractor shall maintain all protective coatings to prevent corrosion. All protective coatings applied in the shop shall be removed immediately prior to assembly of the members in the field. When the protective coating is removed, the members shall be thoroughly cleaned and then coated with multi-purpose automotive grease before assembly.

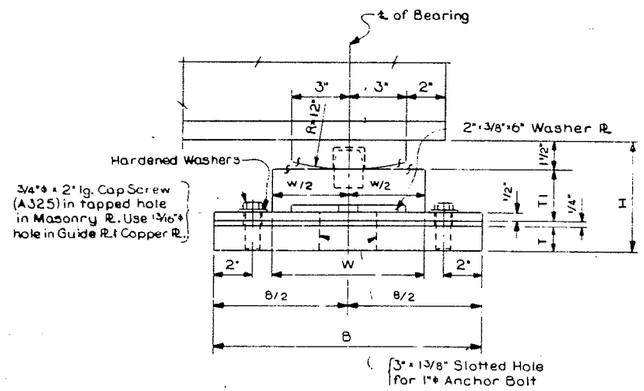

SIDE ELEVATION

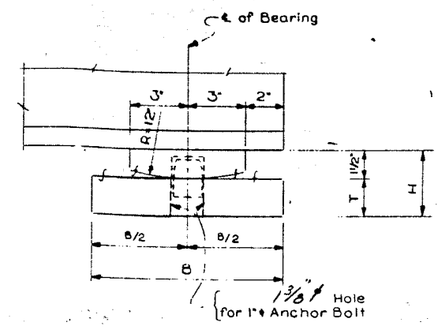

SIDE ELEVATION

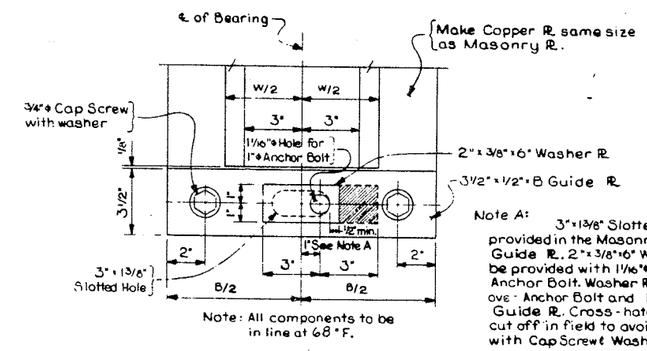

Note: All components to be in line at 68°F.

Note A: 3"×1 3/8" Slotted Hole is to be provided in the Masonry PL, Copper PL & Guide PL. 2"×3/8"×6" Washer PL shall be provided with 1 1/16"φ Hole for 1"φ Anchor Bolt. Washer PL shall be placed over Anchor Bolt and bolted to Guide PL. Cross-hatched area to be cut off in field to avoid interference with Cap Screw & Washer when necessary.

WASHER PLATE ATTACHMENT DETAIL (EXP. BRG.)

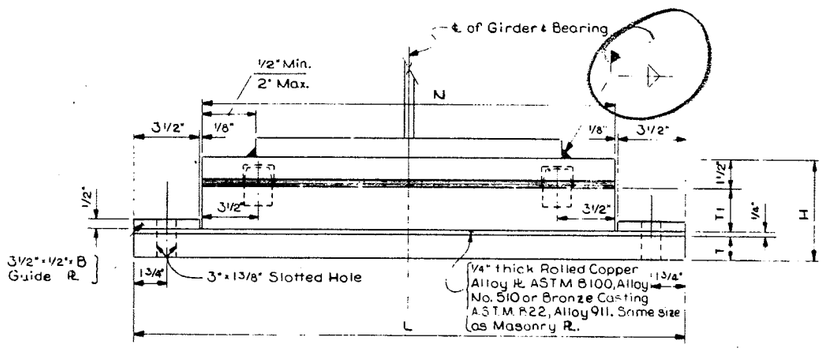

END ELEVATION
EXPANSION BEARING

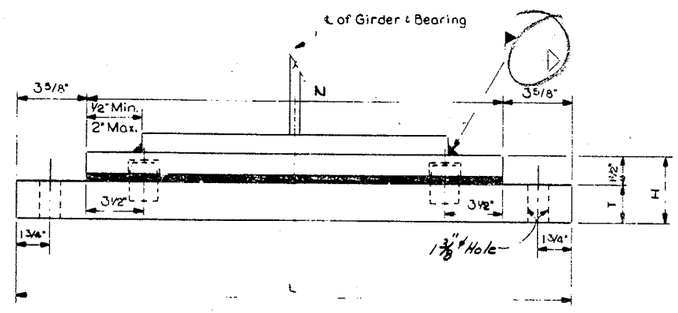

END ELEVATION
FIXED BEARING

EXPANSION BEARING									
Type	Item No.	No. Reqd.	B	L	T	W	N	T1	H
BE1	565.0301	2	12	21	1 1/4	8	13 3/4	2	5

FIXED BEARING							
Item No.	B	L	T	N	H	No. Reqd.	Type
565.0401	6	21	1 1/2	13 3/4	3	2	BF1

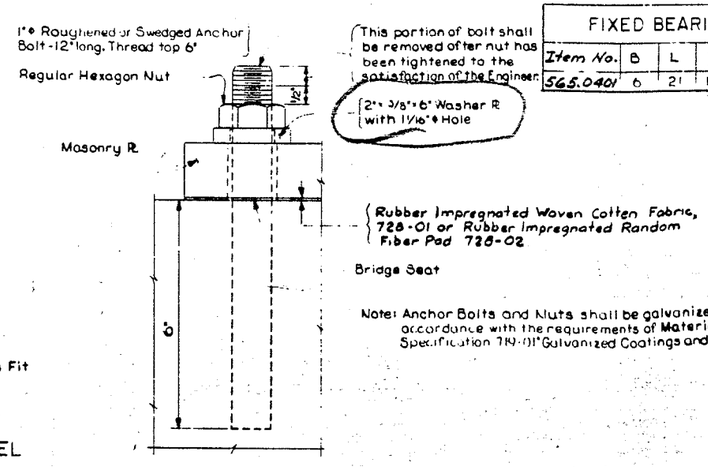

Note: Anchor Bolts and Nuts shall be galvanized in accordance with the requirements of Material Specification 719-01 "Galvanized Coatings and Repair Methods."

ANCHOR BOLT DETAIL

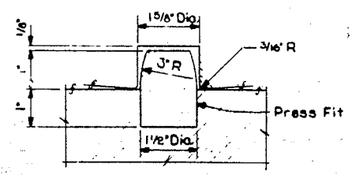

TYPICAL SECTION THRU DOWEL

Note:
All material ASTM A36 except as noted. When bearing is to be used on an unpainted bridge all material to be ASTM A588.
3"×1 3/8" slotted hole in masonry plate shall be filled as per specifications.

STATE OF NEW YORK
DEPARTMENT OF TRANSPORTATION
DIVISION OF CONSTRUCTION

SOUTHBOUND I-481 OVER
N.Y.S. THRUWAY

LOW STEEL BEARINGS

DRAWING NO. 16 OF 24

SITE MADE
PROJECT ENGINEER
CHANGES OF
DRAWN BY N.A.
DATA CHECKED BY N.A.
TRACED BY
TRACE CHECKED BY

D250094

FED. RD. REG. NO.	STATE	FEDERAL AID PROJECT NO.	SHEET NO.	TOTAL SHEETS
	NEW YORK	I-481-2(152)	305	312

Interstate Rte. 571 Extension (I-481)
Collamer Interchange to Northern Blvd.
Onondaga County

CAPITAL PROJECT IDENTIFICATION NO.

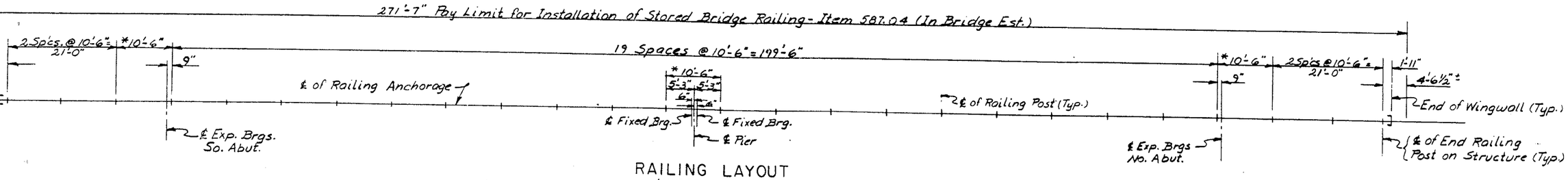

RAILING LAYOUT
(WEST FASCIA)
No Scale

*Rail expansion joint in this panel

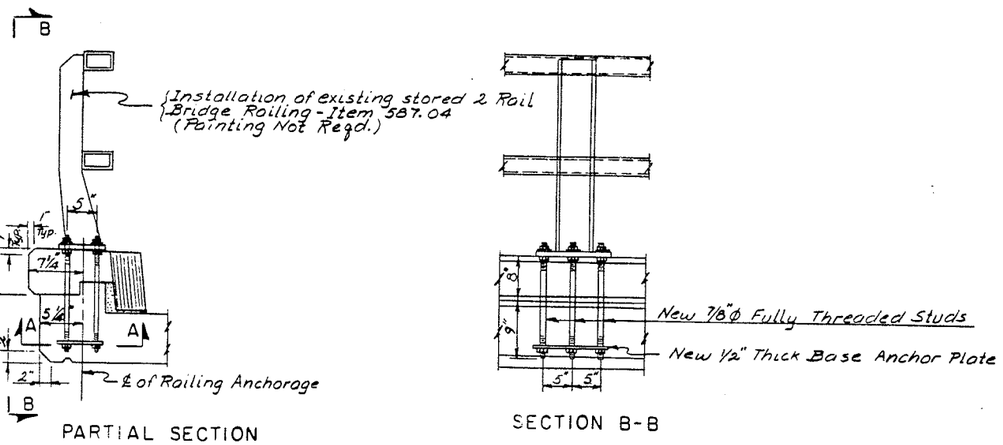

PARTIAL SECTION

SECTION B-B

BRIDGE RAILING DETAILS
No Scale

Note: Provide New Railing Anchorage (Base Plate and Threaded Studs) Paid Under-Item 587.04 (In Bridge Est.)

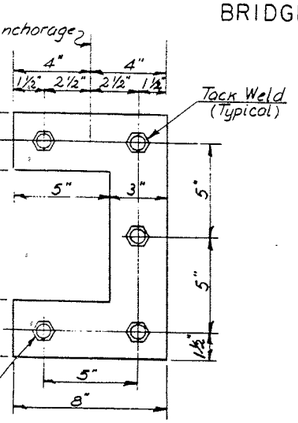

SECTION A-A
Scale 3" = 1'-0"

STATE OF NEW YORK
DEPARTMENT OF TRANSPORTATION
DIVISION OF DESIGN AND CONSTRUCTION

SOUTHBOUND I-481 OVER
N.Y.S. THRUWAY

RAILING LAYOUT

PROJ. ENG. E. Barry
SQUAD
DATE MADE

D250094

FED. RD. REG. NO.	STATE	FEDERAL AID PROJECT NO.	SHEET NO.	TOTAL SHEETS
	NEW YORK	I-481-2(152)	306	312

Interstate Rte 571 Extension (I-481)
Collamer Interchange to Northern Blvd.
Onondaga County

CAPITAL PROJECT IDENTIFICATION NO.

1093682

Note:
See Dwg-MD-2 for box beam cable transition

(I) Denotes a back-up post and does not require the use of the 5"x3½"x⅜" shelf angle. Backup posts shall be omitted on trailing end of one-way operations.

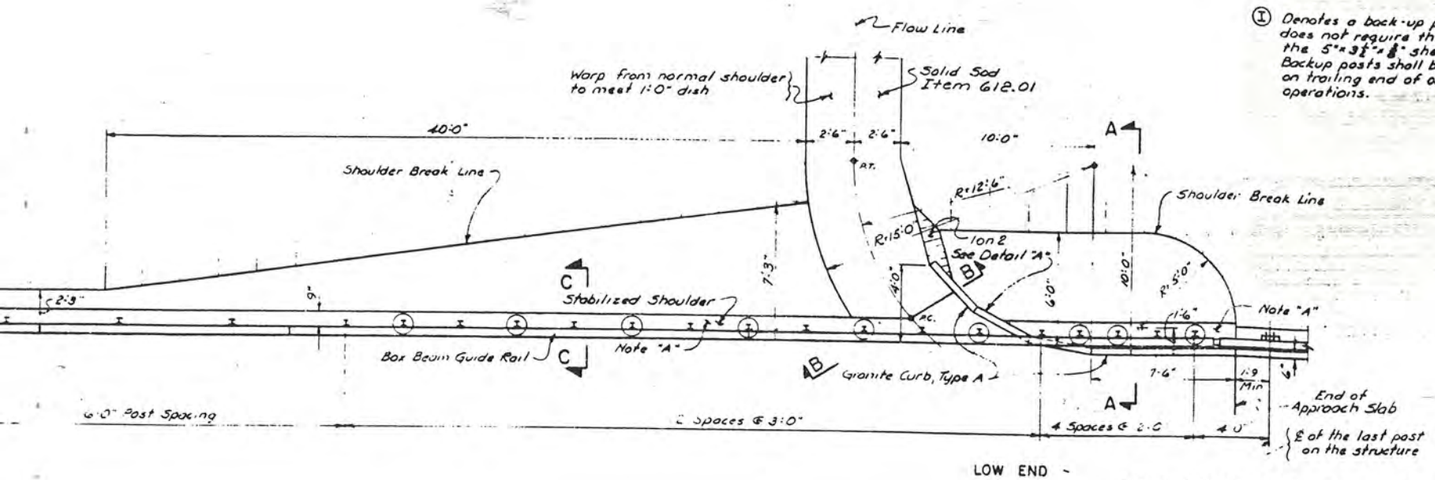

LOW END

TYPE I SHOULDER - FULL WIDENING WITH BRUSH CURB

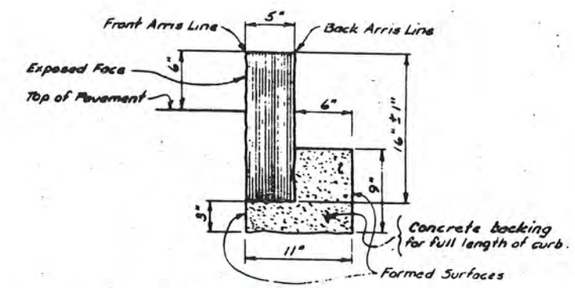

SAWED OR HAMMERED TOP, QUARRY SPLIT FACE
DETAIL OF GRANITE CURB - TYPE A
(NON-MOUNTABLE)

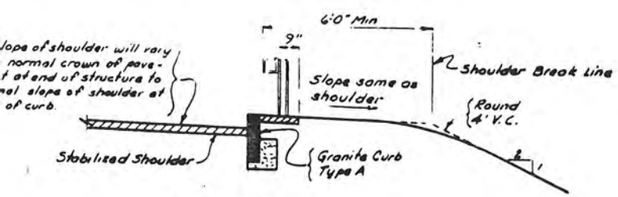

SECTION A-A

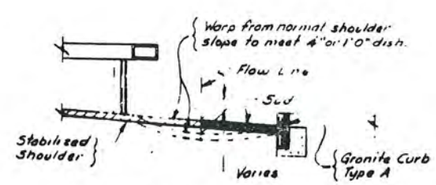

SECTION B-B

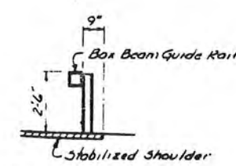

SECTION C-C

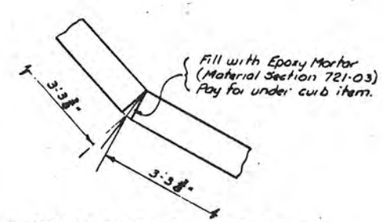

ALTERNATE CURB JOINT DETAIL

Note "A" - Pave this area with the same material as in the stabilized shoulder. Payment will be made under stabilized shoulder item.

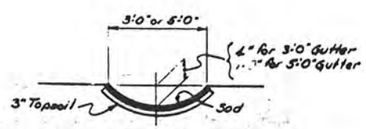

SECTION THRU GUTTER

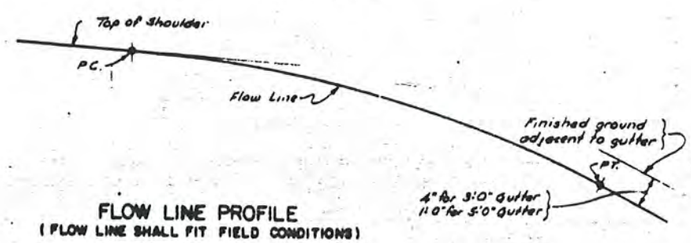

FLOW LINE PROFILE
(FLOW LINE SHALL FIT FIELD CONDITIONS)

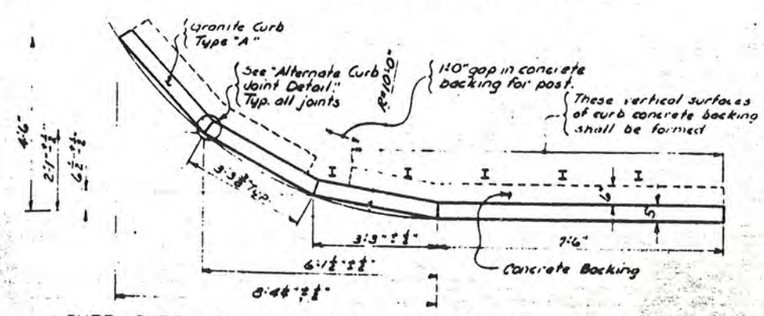

CURB, CURB LAYOUT AND CONCRETE BACKING DETAILS
DETAIL "A"

STATE OF NEW YORK
DEPARTMENT OF TRANSPORTATION
DIVISION OF DESIGN AND CONSTRUCTION

SOUTHBOUND I-481 OVER
N.Y.S. THRUWAY

SOD GUTTER DETAILS

FINAL SUB.		DATE MADE
DESIGN		DRAWING NO. 18 OF 24

D250094

FED. RD REG. NO.	STATE	FEDERAL AID PROJECT NO.	SHEET NO.	TOTAL SHEETS
	NEW YORK	I-481-2(152)	308	312

Interstate Rte. 571 Extension (I-481)
Collamer Interchange to Northern Blvd.
Onondaga County

CAPITAL PROJECT IDENTIFICATION NUMBER 3107.00

1093682

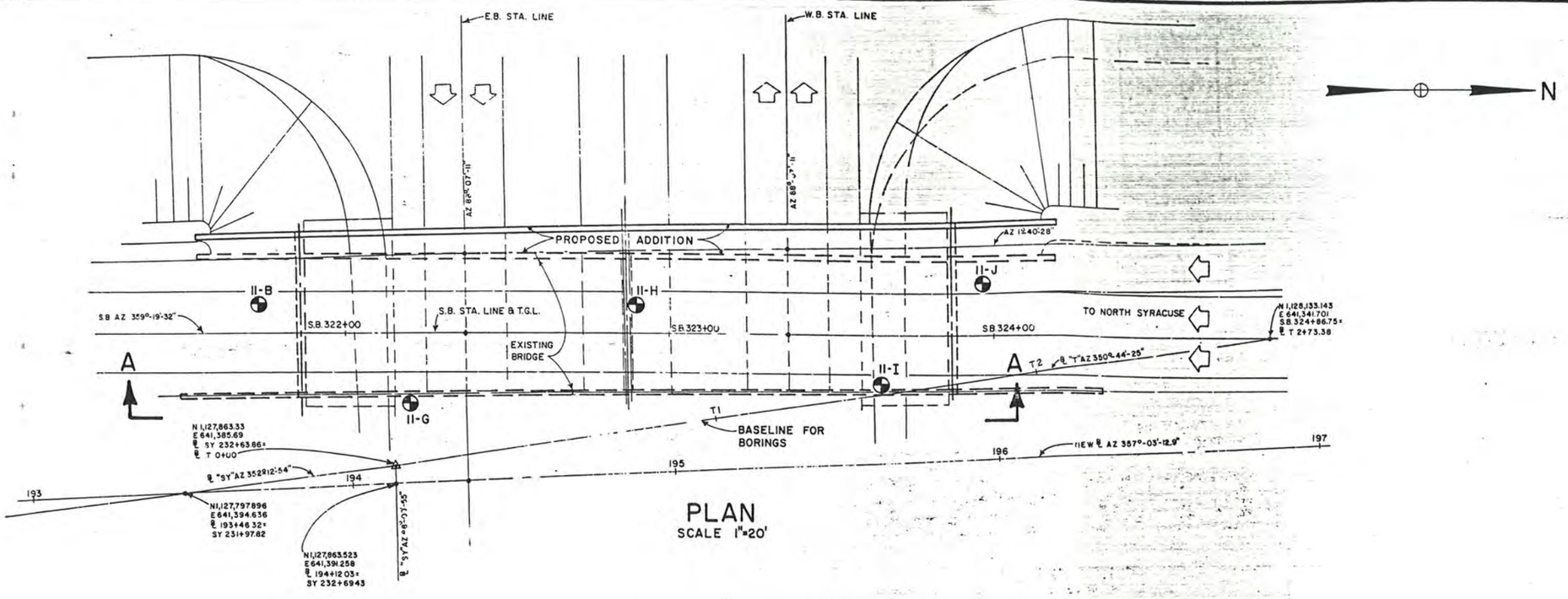

PLAN
SCALE 1"=20'

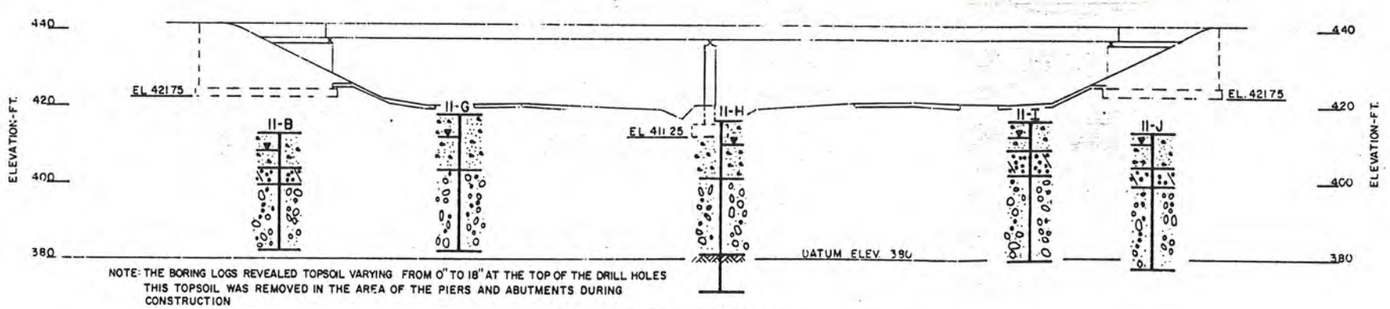

NOTE: THE BORING LOGS REVEALED TOPSOIL VARYING FROM 0" TO 18" AT THE TOP OF THE DRILL HOLES THIS TOPSOIL WAS REMOVED IN THE AREA OF THE PIERS AND ABUTMENTS DURING CONSTRUCTION

SECTION A-A
BORINGS PROJECTED PERPENDICULAR TO SECTION LINE
SCALE 1"=20'

REFERENCE PLANS

Preliminary Structure Plans
Used for Analysis were

repared By The Structures Design
d Construction Division

Scale	Date
1"=20'	SEPT. 3, 1980

apered By John Charles Gregory
awn By D. Jones
rg. Reviewed By
ecked By

GENERAL NOTES

The subsurface explorations shown hereon were made between 11/20/61 to 12/7/61 by the Regional Soils Section

1) General soil and rock (where encountered) strata descriptions and indicated boundaries are based on an engineering interpretation of all available subsurface information by the Soil Mechanics Bureau and may not necessarily reflect the actual variation in subsurface conditions between borings and samples. Detailed data and field interpretations of conditions encountered in individual borings are shown on the subsurface exploration logs.

2) The observed water levels and/or conditions indicated on the subsurface profiles are as recorded at the time of exploration. These water levels and/or conditions may vary considerably, with time, according to the prevailing climate, rainfall or other factors and are otherwise dependent on the duration of and methods used in the explorations program.

3) Sound engineering judgment was exercised in preparing the subsurface information presented hereon. This information was prepared and is intended for State design and estimate purposes only. Its presentation on the plans or elsewhere is for the purpose of providing intended users with access to the same information available to the State. This subsurface information interpretation is presented in good faith and is not intended as a substitute for personal investigation, independent interpretations or judgment of the Contractor.

4) All structure details shown hereon are for illustrative purposes only and may not be indicative of the final design conditions shown in the contract plans.

5) Footing elevations shown are as indicated at the time of this drawing's preparation.

LEGEND

The following tables summarize the descriptive information used on this profile

Density (Non Plastic Soils)	No of blows per foot of penetration of 2 inch O D (1-1/2 inch I D) sampler using a 300 lb drop hammer, 18 inch fall
Very Loose	0-3
Loose	4-8
Medium Compact	9-20
Compact	21-35
Very Compact	over 35
Consistency (Plastic Soils)	
Very Soft	0-2
Soft	3-6
Firm	7-12
Stiff	13-20
Hard	over 20

The system for describing soil materials shown on this drawing is detailed in "Soil Description Procedure" Official Issuance No. 7.41-5 STP 2/75 prepared by the New York State Department of Transportation, Soil Mechanics Bureau

SYMBOLS

DRILL HOLE

OBSERVED WATER LEVEL

Medium Compact Brown & Red Silty fine Sand & Reddish Brown Silt, fine Gravelly

Compact to Very Compact Red Gravelly Silt, Sandy & Red Gravelly Silt, Clayey (Glacial Till)

Loose Reddish Brown & Brown Sandy Silt

LEDGEROCK

APPROVED SEP 30 1980
L. H. Moore
DIRECTOR
SOIL MECHANICS BUREAU

REGION NO. 3
COUNTY ONONDAGA

STATE OF NEW YORK
DEPARTMENT OF TRANSPORTATION
TECHNICAL SERVICES DIVISION

GENERAL SUBSURFACE PROFILE FOR
BRIDGE No. 4S I-481 OVER N.Y. STATE THRUWAY

D250094

FED. RD. REG. NO.	STATE	FEDERAL AID PROJECT NO	SHEET NO.	TOTAL SHEETS
	NEW YORK	I-481-2(152)	310	312

Interstate Rte. 571 Extension (I-481)
Collamer Interchange to Northern Blvd.
Onondaga County

CAPITAL PROJECT IDENTIFICATION NO. 3107.00-114-77

1093682

Note
The max. reinforcement in the structural slab and the usual reinforcement in this fascia and curb are not shown on these plans.

Note.
The width of seal before compression shall be 1 3/4".
For Section C-C, see Dwg. No. 21.

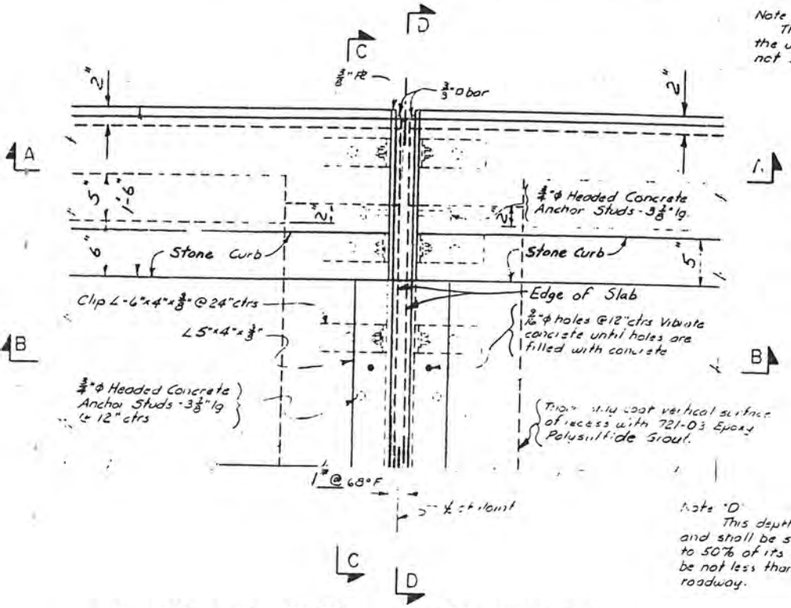

PLAN AT PIER — WEST FASCIA
Not to Scale

Note "D"
This depth shall be indicated on the shop drawings and shall be such so that when the seal is compressed to 50% of its normal width the top of the seal shall be not less than 1/4" nor more than 3/8" below the top of roadway.

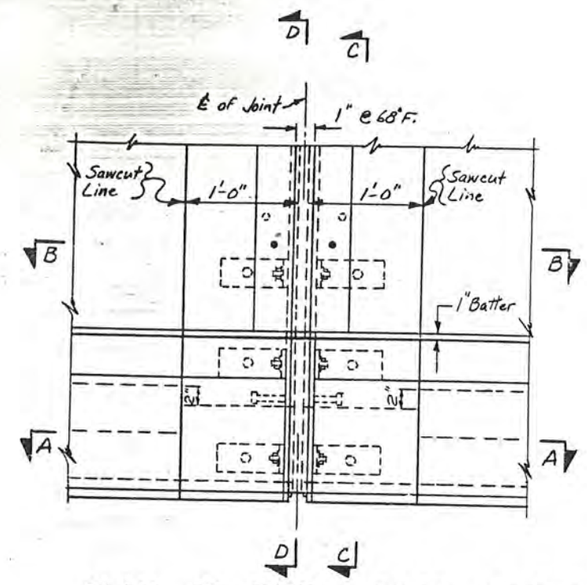

PLAN AT PIER — EAST FASCIA
Not to Scale

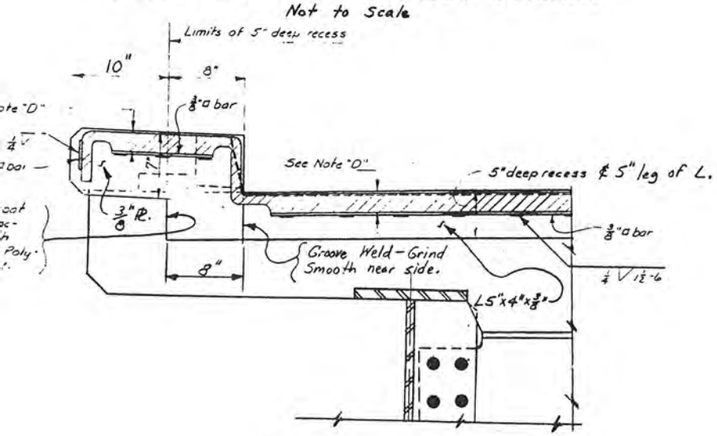

SECTION D-D
Not to Scale

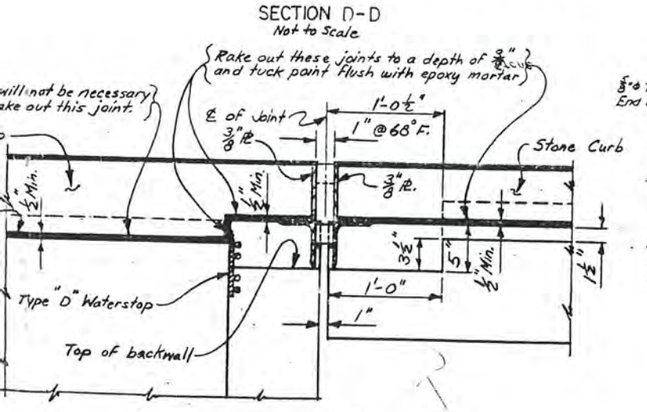

Note:
Reinforcement not shown

SECTION H-H
Not to Scale

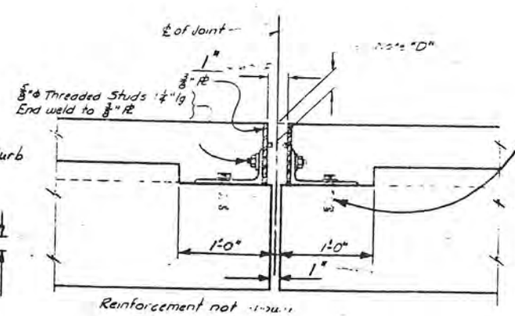

Reinforcement not shown

SECTION A-A
Not to Scale

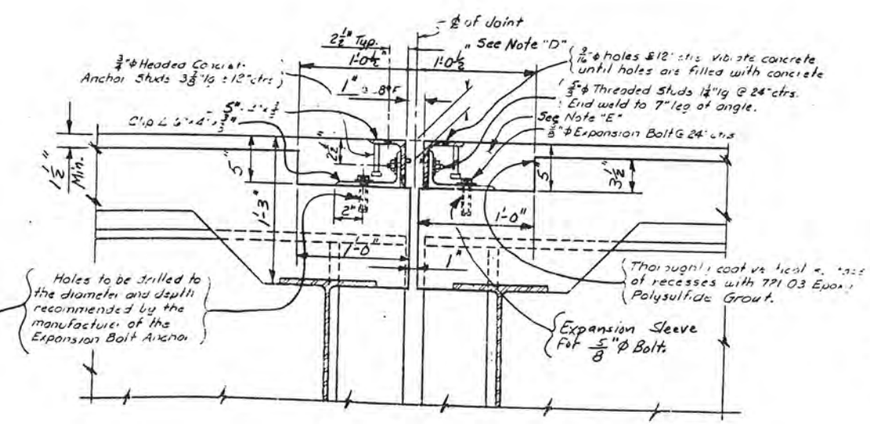

SECTION B-B
Not to Scale

Note:
It is desirable to have the armored joint with its preformed elastic joint seals assembled in the shop and delivered to the job site as set for installation in its preformed recess in the structural slab. In cases where the armored joint cannot be assembled in the shop, due to its excessive length causing shipping problems, the joint shall be sealed with the preformed elastic joint seals before the structure is open to traffic, including construction traffic, and before discontinuing operation when work is suspended during the Winter.

Notes
For detail of Headed Concrete Anchor Studs see Dwg. 21

ARMORED JOINT SYSTEM			COMPRESSION SEAL		
TYPE	LOCATION	PAY ITEM	TYPE	NOM. WIDTH	DIM "A" @ 68°
A1-FIXED	PIER	567.31	1	1 3/4"	1"

STATE OF NEW YORK
DEPARTMENT OF TRANSPORTATION
DIVISION OF CONSTRUCTION

NB & SB I-481 OVER
N.Y.S. THRUWAY

ARMORED JOINT SYSTEM WITH COMPRESSION SEAL (2 OF 2)

PRIN. ENG. R. Barry
BRMAD
DATE MADE

D250094

FED. RD. REG. NO.	STATE	FEDERAL AID PROJECT NO.	SHEET NO.	TOTAL SHEETS
	NEW YORK	I-481-2(152)	309	312

Interstate Rte. 571 Extension (I-481)
Collamer Interchange to Northern Blvd.
Onondaga County 1093682

CAPITAL PROJECT IDENTIFICATION NO. 3107.00-114-77

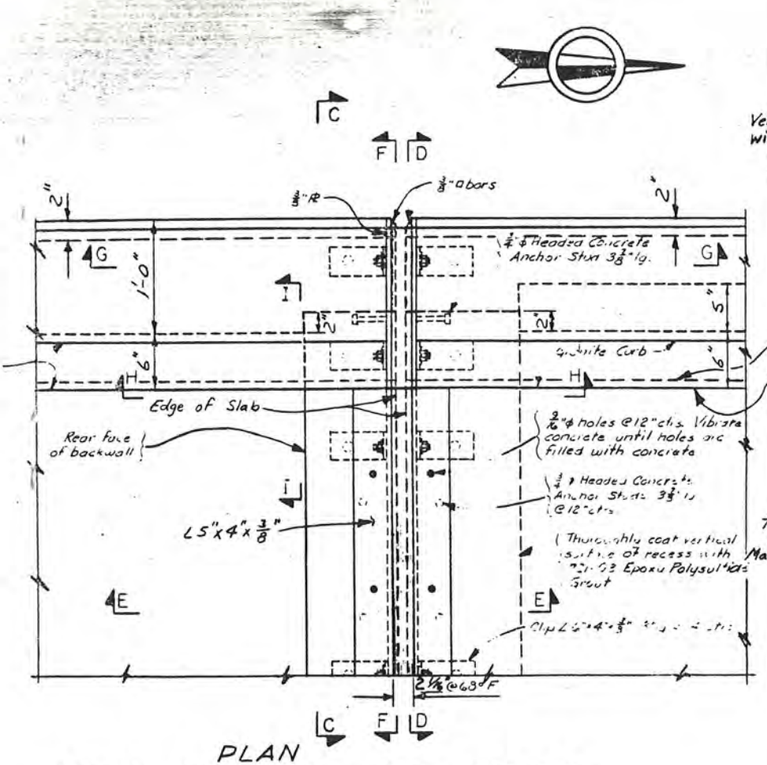

PLAN
SOUTH ABUTMENT — WEST FASCIA
NORTH ABUTMENT SIMILAR
Not to Scale

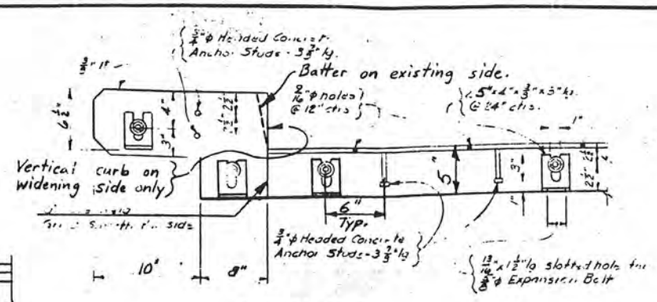

SECTION C-C
ONLY STEEL SHOWN
Not to Scale

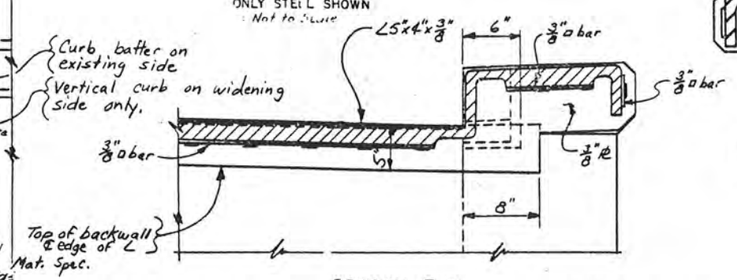

SECTION F-F
Not to Scale

Note:
Sections D-D & H-H are shown on Dwg. No. 22.
The width of seal before compression shall be 3 1/2".

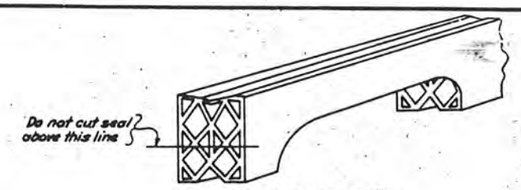

All cutting to be done with a coping saw, soap and water.

The seal shall be supplied in one piece for the full length of joint. Splices will not be permitted when the length of this piece is less than 50 feet. For lengths up to 100 feet one shop splice will be permitted. For lengths in excess of 100 feet shop splices may be placed at approximately 50 foot intervals.

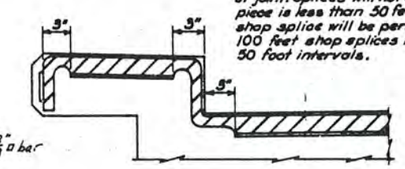

DETAIL FOR CUTTING AND BENDING SEAL
Not to Scale

Note:
Stone Curb, Overlay and Sealed Armored Joint not shown.

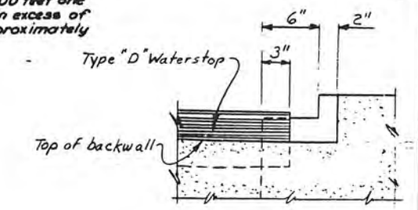

SECTION I-I
Not to Scale

Slab, Backwall & Header Reinforcement not shown.

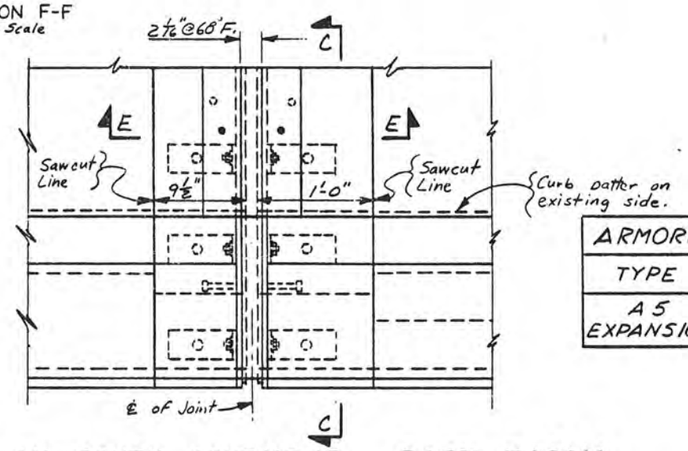

PLAN—SOUTH ABUTMENT — EAST FASCIA
NORTH ABUTMENT SIMILAR
Not to Scale

ARMORED JOINT SYSTEM			COMPRESSION SEAL		
TYPE	LOCATION	PAY ITEM	TYPE	NOM. WIDTH	DIM "A" @68°
A5 EXPANSION	SOUTH & NORTH ABUTMENTS	567.35	5	3 1/2"	2 1/16"

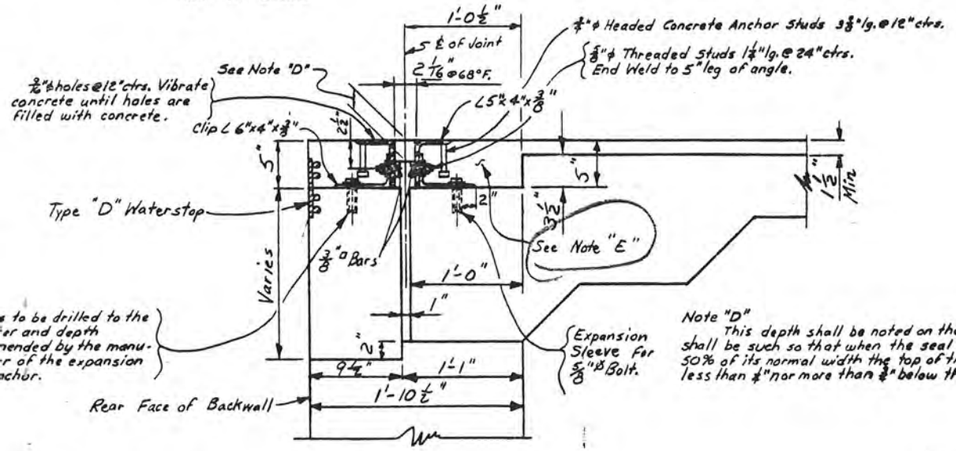

SECTION E-E
Not to Scale

Note "D"
This depth shall be noted on the shop drawings and shall be such so that when the seal is compressed to 50% of its normal width the top of the seal shall not be less than 1/4" nor more than 1/2" below the top of roadway.

It is desirable to have the armored joint with its preformed elastic joint sealer assembled in the shop and delivered to the job site all set for installation in its preformed recess in the structural slab. In cases where the armored joint cannot be assembled in the shop due to its excessive length causing shipping problems, the joint shall be sealed with the preformed elastic joint sealer before the structure is open to traffic, including construction traffic, and before discontinuing operation when work is suspended during the Winter.

For details of Type "D" Waterstops see Dwg. No. 19.

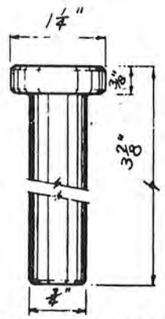

DETAIL OF HEADED CONC. ANCHOR STUD
Not to Scale

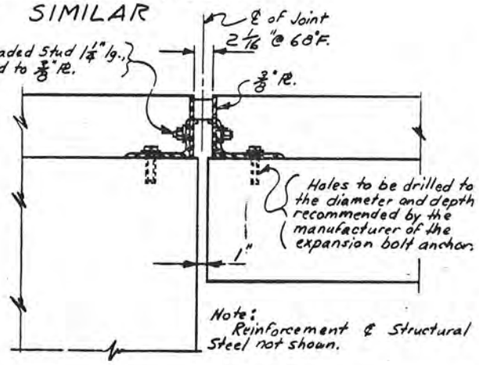

Note:
Reinforcement & Structural Steel not shown.

SECTION G-G
Not to Scale

STATE OF NEW YORK
DEPARTMENT OF TRANSPORTATION
DIVISION OF CONSTRUCTION

NB & SB I-481 OVER N.Y.S. THRUWAY

ARMORED JOINT SYSTEM WITH COMPRESSION SEAL (1 OF 2)

PROJ. ENG. E.J. Cherry
SQUAD
DATE MADE
DRAWING NO. 21 OF 24

D258367

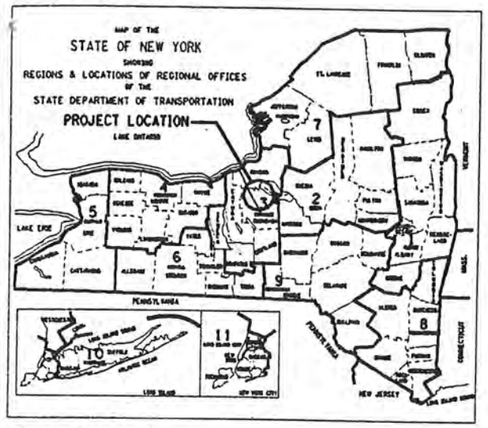

PROJECT DESCRIPTION

THIS IS A BRIDGE DECK OVERLAY PROJECT FOR 11 BRIDGES. THE BRIDGES ARE LOCATED ON I-81. IN OSWEGO AND ONONDAGA COUNTIES AND I-481 AND I-690 IN ONONDAGA COUNTY
BEGINNING REFERENCE MARKER 81I-3303-3122
ENDING REFERENCE MARKER 81I-3404-1002
BEGINNING REFERENCE MARKER 481I-3301-2088
ENDING REFERENCE MARKER 481I-3301-2089
BEGINNING REFERENCE MARKER 690I-3301-4014
ENDING REFERENCE MARKER 690I-3301-2040

CONTRACTOR'S NAME _____

AWARD DATE _____

COMPLETION DATE _____

FINAL ACCEPTANCE DATE _____

REGIONAL DIRECTOR _____

ENGINEER IN CHARGE _____

FINAL COST TOTAL _____

FISCAL SHARE COST(S)

STATE OF NEW YORK
DEPARTMENT OF TRANSPORTATION
OFFICE OF ENGINEERING

33 - 1093682

D258367

I 481 NB / 90I X

MONO-DECK & JOINTS
ABUTMENT BEARINGS & PEDS

INTERSTATE BRIDGE DECK OVERLAY PROJECT
VARIOUS BRIDGES ON I-690, I-81 AND I-481

ONONDAGA AND OSWEGO COUNTIES

355 SHEETS

CONTRACT D258367

F.A. PROJECT Q05-3804-206

STANDARD SHEETS

M203-1, M203-2, M403-1, M502-2, M502-7, M606-3, M606-5, M606-15R1, M607-2, M607-10, M607-12, M611-1, M619-3R1, M619-4, M619-5, M670-1, M670-2, M670-3R1

Douglas R. Hilbert 11/16/06
Bruce Gralla 11/30/04
Gary Cook 11/28/06
Bruce Gralla 11/19/08
D.J. Hann 11/18/10
Bruce Gralla 11/18/2010

ALL WORK CONTEMPLATED UNDER THIS CONTRACT IS TO BE COVERED BY AND IN CONFORMITY WITH THE STANDARD SPECIFICATIONS (METRIC UNITS) OF JANUARY 2, 1995, AS AMENDED BY ADDENDA NOS. 1 AND 2, EXCEPT AS MODIFIED ON THESE PLANS AND IN THE ITEMIZED PROPOSAL.

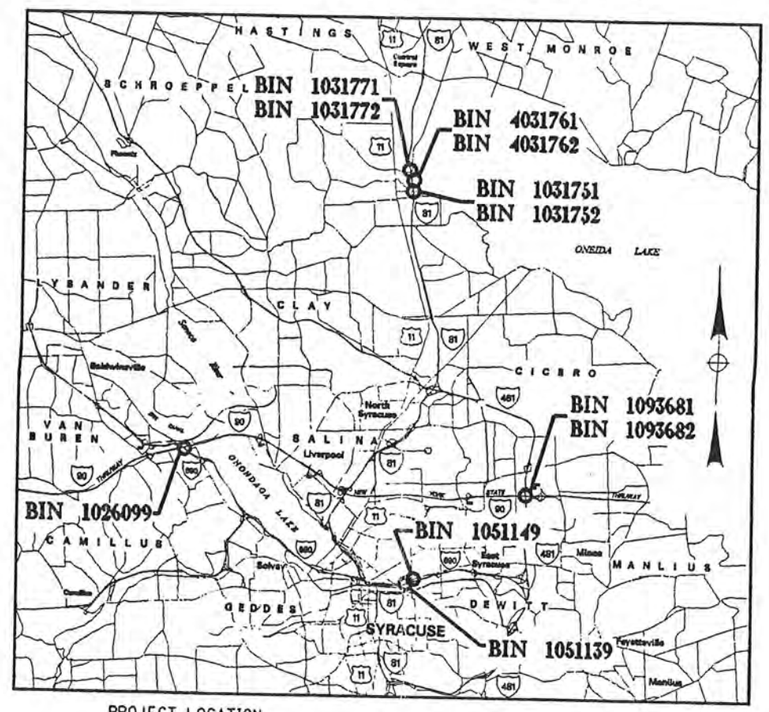

PROJECT LOCATION
NOT TO SCALE

US DEPARTMENT OF TRANSPORTATION
FEDERAL HIGHWAY ADMINISTRATION

APPROVED _____ 19 ___

_____
DIVISION ADMINISTRATOR

BRIDGE DECK OVERLAY PROJECT			
VARIOUS BRIDGES			
I-690, I-81 AND I-481			
ONONDAGA AND OSWEGO COUNTIES			
FED. ROAD REG. NO.	STATE	SHEET NO.	TOTAL SHEETS
1	N.Y.	1	354
FEDERAL AID PROJECT NO.	Q05-3804-206		
CAPITAL PROJECT IDENTIFICATION NO.	3804.06.311		
INDEX ON SHEET NO. 2			

RECOMMENDED BY Edward L. Wilday 12/8/99
for REGIONAL DESIGN ENGINEER DATE

RECOMMENDED BY John E. Patterson 12-8-99
FOR REGIONAL CONSTRUCTION ENGINEER DATE

RECOMMENDED BY Peter Thompson 12/8/99
REGIONAL TRANSPORTATION MAINTENANCE ENGINEER DATE

RECOMMENDED BY 12-8-99
REGIONAL TRAFFIC ENGINEER DATE

APPROVED BY Jon P. Edinger 12/7/99
REGIONAL DIRECTOR DATE

D258367

D258367

DRAFTED BY Douglas R. Hilbert CHECKED BY Nick Delcine
ESTIMATED BY Douglas R. Hilbert CHECKED BY Nick Delcine
DESIGNED BY Douglas R. Hilbert
JO. MANAGER Nick Delcine
SUP. Richard Clemens

FILE NAME = c:\pwwork\d258367\d258367.dgn
DATE/TIME = 06-DEC-1999 13:41
USER = dksmith

FED ROAD REG. NO.	STATE	CONTRACT NO.	SHEET NO.	TOTAL SHEETS
1	N.Y.	D258367	6	354

INTERSTATE BRIDGE DECK OVERLAY PROJECT
VARIOUS BRIDGES ON I-81, I-690 AND I-481
ONONDAGA AND OSWEGO COUNTIES

P.I.N. 3804.06 B.I.N. VARIOUS

QUANTITY ESTIMATE BY STRUCTURE

ITEM	DESCRIPTION	UNIT	B.I.N. 1026099		B.I.N. 1031751		B.I.N. 1031752		B.I.N. 1031771		B.I.N. 1031772		B.I.N. 1051139		B.I.N. 1051149		B.I.N. 1093681		B.I.N. 1093682		B.I.N. 4031761		B.I.N. 4031761	
			QTY	FINAL	QTY	FINAL	QTY	FINAL	QTY	FINAL	QTY	FINAL	QTY	FINAL	QTY	FINAL	QTY	FINAL	QTY	FINAL	QTY	FINAL	QTY	FINAL
15202.0620M	REMOVAL & DISPOSAL OF ASBESTOS CONTAINING MATERIAL	LS	—		NEC		NEC		NEC		NEC		NEC		—		—		—		NEC		NEC	
203.18M	CLEANING CLOSED DRAINAGE SYSTEMS	M	—		—		—		—		—		1260		—		—		—		—		—	
203.19M	CLEANING DRAINAGE STRUCTURES AND MANHOLES	EA	—		—		—		—		—		29		—		—		—		—		—	
17203.80M	CONTROLLED LOW STRENGTH MATERIAL	CM	—		22		23		—		—		—		—		—		—		23		23	
304.15M	SUBBASE COURSE, OPTIONAL TYPE	CM	—		—		—		7		7		—		—		—		—		—		—	
06403.127202M	SUPERPAVE HMA, UPSTATE HIGH VOLUME 12.5mm F2	MT	3		97		82		82		82		—		—		—		—		82		82	
490.30M	MISCELLANEOUS COLD MILLING	SM	75		1102		852		852		852		—		—		—		—		852		852	
15502.4598M	PRESS. RELIEF JTS IN EXISTING CEMENT CONC. PAVEMENT	M	—		—		—		11		11		—		—		—		—		—		—	
10520.09M	SAWCUT ASPHALT CONCRETE	M	300		1058		58		107		107		—		—		—		—		291		291	
18555.9805M	CONCRETE FOR STRUCTURES CLASS HP	CM	25		6		4		4		4		82		3		12		13		6		6	
556.0102M	EPOXY-COATED STEEL FABRIC REINFORCEMENT	SM	1042		380		440		612				—		—		—		—		1772		1772	
556.0201M	UNCOATED BAR REINFORCEMENT FOR CONCRETE STRUCTURES	KG	442		16		16		2046		2074		1440		182		262		214		79		79	
556.0202M	EPOXY-COATED BAR REINF. FOR CONCRETE STRUCTURES	KG	—		112		112		1830		1786		—		—		—		—		—		—	
18557.2098M	STRUCT. APPR. SLAB W/INTEGRAL WEARING SURF., CLASS HP	SM	—		—		—		138		137		—		—		—		—		—		—	
558.01M	TRANSVERSE SAWCUT GROOVING OF STRUCTURAL SLAB	SM	978		370		431		644		644		7171		364		959		748		1717		1717	
564.700001M	STRUCTURAL STEEL REPLACEMENT	EA	—		1		2		—		—		—		—		—		—		—		—	
564.700002M	STRUCTURAL STEEL REPLACEMENT	EA	—		1		2		—		—		—		—		—		—		—		—	
564.700003M	STRUCTURAL STEEL REPLACEMENT	EA	1		—		—		—		—		—		—		—		—		—		—	
15565.4302M	BRIDGE BEARING RESTORATION	EA	1		9		12		—		—		5		—		—		—		—		—	
566.01M	MODULAR EXPANSION JOINT SYSTEM - ONE CELL	M	—		—		—		—		—		—		—		—		—		14		14	
567.31M	ARMORED JOINT SYSTEM WITH COMPRESSION SEAL-TYPE A1	M	35		—		—		17		17		14		17		16		14		—		—	
567.32M	ARMORED JOINT SYSTEM WITH COMPRESSION SEAL-TYPE A2	M	17		—		—		17		17		—		—		—		—		—		—	
567.33M	ARMORED JOINT SYSTEM WITH COMPRESSION SEAL-TYPE A3	M	—		—		—		—		—		14		—		—		—		14		14	
567.34M	ARMORED JOINT SYSTEM WITH COMPRESSION SEAL-TYPE A4	M	17		—		—		17		17		—		17		—		—		—		—	
567.35M	ARMORED JOINT SYSTEM WITH COMPRESSION SEAL-TYPE A5	M	—		—		—		—		—		224		—		32		27		—		—	
567.36M	ARMORED JOINT SYSTEM WITH COMPRESSION SEAL-TYPE A6	M	17		—		—		—		—		—		—		—		—		—		—	
18567.46M	ELASTOMERIC CONCRETE FOR BRIDGE JOINT SYSTEMS	CM	—		14		17		—		—		—		—		—		—		—		—	
16567.64M	REPLACING COMPRESSION SEAL FOR EXISTING BRIDGE JOINTS	M	—		23		25		7		7		487		26		—		—		—		—	
568.32M	CEMENT MORTAR PADS	EA	—		—		—		—		—		—		—		56		56		—		—	
568.50M	STEEL BRIDGE RAILING (TWO RAIL)	M	—		40		40		51		51		—		—		166		166		—		—	
16570.32M	LOCALIZED PAINTING	SM	1		3		4		1		1		2		—		1		1		—		—	
16570.72M	LOCALIZED VACUUM CONTAINMENT	SM	1		3		4		1		1		2		—		1		1		—		—	
571.010001M	TREATMENT AND DISPOSAL OF PAINT REMOVAL WASTE	CM	1		—		—		—		—		—		—		—		—		—		—	
571.010002M	TREATMENT AND DISPOSAL OF PAINT REMOVAL WASTE	CM	—		1		—		—		—		—		—		—		—		—		—	
571.010003M	TREATMENT AND DISPOSAL OF PAINT REMOVAL WASTE	CM	—		—		1		—		—		—		—		—		—		—		—	
571.010004M	TREATMENT AND DISPOSAL OF PAINT REMOVAL WASTE	CM	—		—		—		1		—		—		—		—		—		—		—	
571.010005	TREATMENT AND DISPOSAL OF PAINT REMOVAL WASTE	CM	—		—		—		—		1		—		—		—		—		—		—	
571.010006M	TREATMENT AND DISPOSAL OF PAINT REMOVAL WASTE	CM	—		—		—		—		—		1		—		—		—		—		—	
571.010007M	TREATMENT AND DISPOSAL OF PAINT REMOVAL WASTE	CM	—		—		—		—		—		—		—		1		—		—		—	
571.010008M	TREATMENT AND DISPOSAL OF PAINT REMOVAL WASTE	CM	—		—		—		—		—		—		—		—		1		—		—	
18574.101001M	CLASS B CONTAINMENT	LS	NEC		—		—		—		—		—		—		—		—		—		—	
18574.101002M	CLASS B CONTAINMENT	LS	—		NEC		—		—		—		—		—		—		—		—		—	
18574.101003M	CLASS B CONTAINMENT	LS	—		—		NEC		—		—		—		—		—		—		—		—	
18574.101004M	CLASS B CONTAINMENT	LS	—		—		—		NEC		—		—		—		—		—		—		—	
18574.101005M	CLASS B CONTAINMENT	LS	—		—		—		—		NEC		—		—		—		—		—		—	
18574.101006M	CLASS B CONTAINMENT	LS	—		—		—		—		—		NEC		—		—		—		—		—	
18574.101007M	CLASS B CONTAINMENT	LS	—		—		—		—		—		—		—		NEC		—		—		—	
18574.101008M	CLASS B CONTAINMENT	LS	—		—		—		—		—		—		—		—		NEC		—		—	
576.02M	SCUPPER (TYPE B)	EA	—		—		—		—		—		8		—		—		—		—		—	
576.21M	DOWNSPOUT SYSTEM (PVC)	M	—		—		—		—		—		125		—		—		—		—		—	
578.020001M	OVERLAY CONCRETE, CLASS E	SM	1002		—		—		—		—		—		—		—		—		—		—	
578.020002M	OVERLAY CONCRETE, CLASS E	SM	—		378		—		—		—		—		—		—		—		—		—	
578.020003M	OVERLAY CONCRETE, CLASS E	SM	—		—		439		—		—		—		—		—		—		—		—	
578.020004M	OVERLAY CONCRETE, CLASS E	SM	—		—		—		—		—		—		—		—		—		1760		—	
578.020005M	OVERLAY CONCRETE, CLASS E	SM	—		—		—		—		—		—		—		—		—		—		1760	
578.020006M	OVERLAY CONCRETE, CLASS E	SM	—		—		—		525		—		—		—		—		—		—		—	
578.020007M	OVERLAY CONCRETE, CLASS E	SM	—		—		—		—		525		—		—		—		—		—		—	
578.020008M	OVERLAY CONCRETE, CLASS E	SM	—		—		—		—		—		7307		—		—		—		—		—	
578.020009M	OVERLAY CONCRETE, CLASS E	SM	—		—		—		—		—		—		371		—		—		—		—	
578.020010M	OVERLAY CONCRETE, CLASS E	SM	—		—		—		—		—		—		—		977		—		—		—	
578.020011M	OVERLAY CONCRETE, CLASS E	SM	—		—		—		—		—		—		—		—		766		—		—	
578.030001M	SLAB RECONSTRUCTION CONCRETE, CLASS D OR E	SM	912		—		—		—		—		—		—		—		—		—		—	
578.030002M	SLAB RECONSTRUCTION CONCRETE, CLASS D OR E	SM	—		378		—		—		—		—		—		—		—		—		—	
578.030003M	SLAB RECONSTRUCTION CONCRETE, CLASS D OR E	SM	—		—		439		—		—		—		—		—		—		—		—	
578.030004M	SLAB RECONSTRUCTION CONCRETE, CLASS D OR E	SM	—		—		—		—		—		—		—		—		—		1760		—	
578.030005M	SLAB RECONSTRUCTION CONCRETE, CLASS D OR E	SM	—		—		—		—		—		—		—		—		—		—		1760	
578.030006M	SLAB RECONSTRUCTION CONCRETE, CLASS D OR E	SM	—		—		—		525		—		—		—		—		—		—		—	
578.030007M	SLAB RECONSTRUCTION CONCRETE, CLASS D OR E	SM	—		—		—		—		525		—		—		—		—		—		—	
578.030008M	SLAB RECONSTRUCTION CONCRETE, CLASS D OR E	SM	—		—		—		—		—		7073		—		—		—		—		—	
578.030009M	SLAB RECONSTRUCTION CONCRETE, CLASS D OR E	SM	—		—		—		—		—		—		371		—		—		—		—	
578.030010M	SLAB RECONSTRUCTION CONCRETE, CLASS D OR E	SM	—		—		—		—		—		—		—		977		—		—		—	
578.030011M	SLAB RECONSTRUCTION CONCRETE, CLASS D OR E	SM	—		—		—		—		—		—		—		—		766		—		—	

ALL DIMENSIONS ARE IN m UNLESS OTHERWISE NOTED

AS BUILT REVISIONS

SIGNATURE DATE

ESTIMATE OF QUANTITIES BY STRUCTURE

STATE OF NEW YORK
DEPARTMENT OF TRANSPORTATION

FILENAME	REGION	DATE	DRAWING NO.
380406AB.N1B	3	1/00	EQ-1

DESIGN SUPERVISOR ____ JOB MANAGER ____ DESIGNED BY ____ ESTIMATED BY ____ DRAFTED BY ____ CHECKED BY ____ CHECKED BY ____

FED ROAD REG. NO.	STATE	CONTRACT NO.	SHEET NO.	TOTAL SHEETS
1	N.Y.	D258367	7	354

INTERSTATE BRIDGE DECK OVERLAY PROJECT
VARIOUS BRIDGES ON I-81, I-690 AND I-481
ONONDAGA AND OSWEGO COUNTIES

P.I.N. 3804.06 | B.I.N. VARIOUS

QUANTITY ESTIMATE BY STRUCTURE

ITEM	DESCRIPTION	UNIT	B.I.N. 1026099		B.I.N. 1031751		B.I.N. 1031752		B.I.N. 1031771		B.I.N. 1031772		B.I.N. 1051139		B.I.N. 1051149		B.I.N. 1093681		B.I.N. 1093682		B.I.N. 4031761		B.I.N. 4031761	
			QTY	FINAL	QTY	FINAL	QTY	FINAL	QTY	FINAL	QTY	FINAL	QTY	FINAL	QTY	FINAL	QTY	FINAL	QTY	FINAL	QTY	FINAL	QTY	FINAL
579.02M	REINFORCING BAR EXPOSURE	SM	912		378		439		525		525		6909		371		977		766		—		—	
580.01M	REMOVAL OF STRUCTURAL CONCRETE	CM	34		6		5		4		4		260		3		12		13		6		6	
580.04M	REMOVAL OF CONCRETE APPROACH SLAB	SM	—		—		—		155		154		—		—		—		—		—		—	
581.01M	REMOVAL OF BITUMINOUS CONCRETE OVERLAY (BRIDGE)	SM	—		431		492		776		781		—		—		—		—		1773		1773	
581.02M	REMOVAL OF CEMENT CONCRETE OVERLAY	SM	—		—		—		—		—		—		—		—		—		1760		1760	
582.07M	REM STRUCT CONC - REPLACE W/ VERT & O.H. PATCH MATL	SM	—		—		—		—		—		—		—		—		—		7		7	
585.01M	STRUCTURAL LIFTING, TYPE A	SM	—		9		8		—		—		—		—		12		12		—		—	
585.02M	STRUCTURAL LIFTING, TYPE B	SM	1		—		—		—		—		2		—		—		—		—		—	
585.03M	STRUCTURAL LIFTING, TYPE C	SM	—		—		—		—		—		2		—		—		—		—		—	
586.01M	DRILLING AND GROUTING BOLTS OR REINFORCING BARS	MM	83,406		23,400		23,400		48,000		48,000		237,300		30,600		44,400		44,400		12,000		12,000	
587.01M	BRIDGE RAILING REMOVAL AND DISPOSAL	M	—		69		69		92		92		—		—		166		166		296		296	
587.1002M	BOX BEAM BRIDGE RAIL, TWO RAIL	M	—		30		30		42		42		—		—		—		—		296		296	
589.520001M	REMOVAL OF EXISTING STEEL (EA)	EA	—		1		2		—		—		—		—		—		—		—		—	
589.520002M	REMOVAL OF EXISTING STEEL (EA)	EA	—		1		2		—		—		—		—		—		—		—		—	
589.520003M	REMOVAL OF EXISTING STEEL (EA)	EA	1		—		—		—		—		—		—		—		—		—		—	
589.520004M	REMOVAL OF EXISTING STEEL (EA)	EA	—		—		—		—		—		10		—		—		—		—		—	
589.520005M	REMOVAL OF EXISTING STEEL (EA)	EA	—		—		—		—		—		—		—		12		10		—		—	
589.520006M	REMOVAL OF EXISTING STEEL (EA)	EA	—		5		5		—		—		—		—		—		—		5		4	
590.01M	VERTICAL ADJUSTMENT OF BRIDGE DRAINAGE DEVICES	EA	—		2		2		4		4		—		—		—		—		—		—	
590.02M	VERTICAL ADJUSTMENT OF BRIDGE DRAINAGE DEVICES	EA	—		—		—		—		—		—		—		—		—		30		30	
606.1203M	BOX BEAM GUIDE RAIL END ASSEMBLY, TYPE III	EA	—		—		—		—		—		—		—		1		1		—		—	
606.5910M	RESETTING OF ANCH UNITS FOR CORR BM GR & MED BAR	EA	—		—		—		—		—		—		—		2		—		—		—	
606.71M	REMOVE AND DISPOSE CORRUGATED BEAM GUIDE RAIL	M	—		—		—		—		—		—		—		27		—		—		—	
606.73M	REMOVE AND DISPOSE OF BOX BEAM GUIDE RAIL	M	—		27		27		27		27		—		—		93		93		27		27	
16606.80M	TRANSITION BRIDGE RAIL OR CONC BARRIER TO BOX BEAM	EA	—		27		27		27		27		—		—		33		40		27		27	
16607.0641M	SNOW FENCING ON BRIDGES	M	112		—		—		36		36		—		—		92		92		—		—	
609.15M	RESETTING CURB	M	—		—		—		—		—		475		—		—		—		—		—	
670.1108M	ALUM. LIGHT STANDARDS FOR SINGLE MEMBER/TRUSS ARMS	EA	—		—		—		—		—		8		—		—		—		—		—	
670.1224M	ALUM. SINGLE MEMEBER BRACKET ARM, 2.4m LONG	EA	—		—		—		—		—		8		—		—		—		—		—	
670.2305M	GALVINIZED STEEL PLASTIC COATED CONDUIT, 1½ NPS	M	—		—		—		—		—		8		—		—		—		—		—	
670.3001M	PULLBOXES LESS THAN 0.14CM, INSIDE VOLUME (LIGHTING)	EA	—		—		—		—		—		8		—		—		—		—		—	
670.7501M	GROUND WIRE NO 6 AWG.	EA	—		—		—		—		—		9		—		—		—		—		—	
670.81M	REMOVE AND DISPOSE OF LAMPOST ASSEMBLY	EA	—		—		—		—		—		8		—		—		—		—		—	

ALL DIMENSIONS ARE IN m UNLESS OTHERWISE NOTED

AS BUILT REVISIONS

SIGNATURE | DATE

ESTIMATE OF QUANTITIES BY STRUCTURE

STATE OF NEW YORK
DEPARTMENT OF TRANSPORTATION

FILENAME	REGION	DATE	DRAWING NO.
380406AB.N1B	3	12/99	EQ-2

CHECKED BY ____ DRAFTED BY ____ ESTIMATED BY ____ CHECKED BY ____ DESIGNED BY ____ JOB MANAGER ____ DESIGN SUPERVISOR ____

FILE NAME = c:\users\dsmith\appdata\local\temp\acr\acrtmp*.tmp
DATE/TIME = 22-DEC-1999 10:17
USER = dksmith

FED ROAD REG. NO.	STATE	CONTRACT NO.	SHEET NO.	TOTAL SHEETS
1	N.Y.	D258367	28	354

INTERSTATE BRIDGE DECK OVERLAY PROJECT

VARIOUS BRIDGES ON I-690, I-81 AND I-481

ONONDAGA AND OSWEGO COUNTIES

P.I.N. 3804.06 | B.I.N. SEE NOTE 2

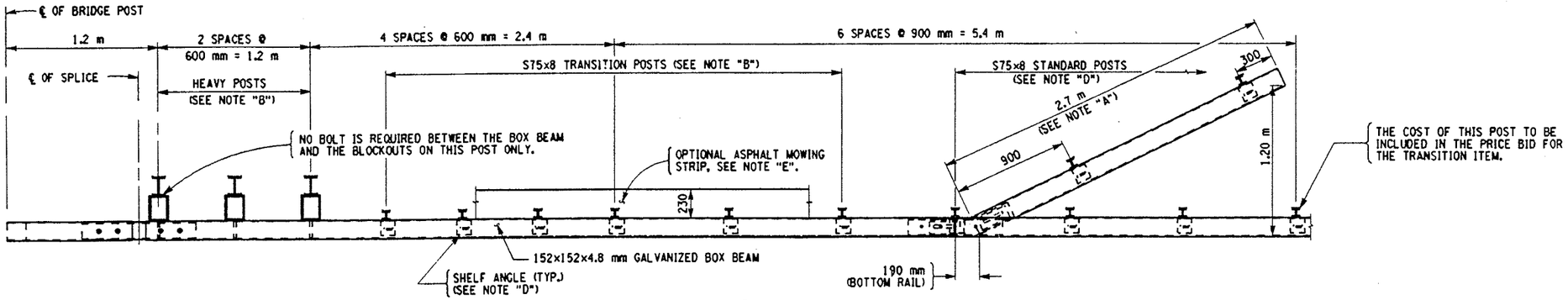

PLAN

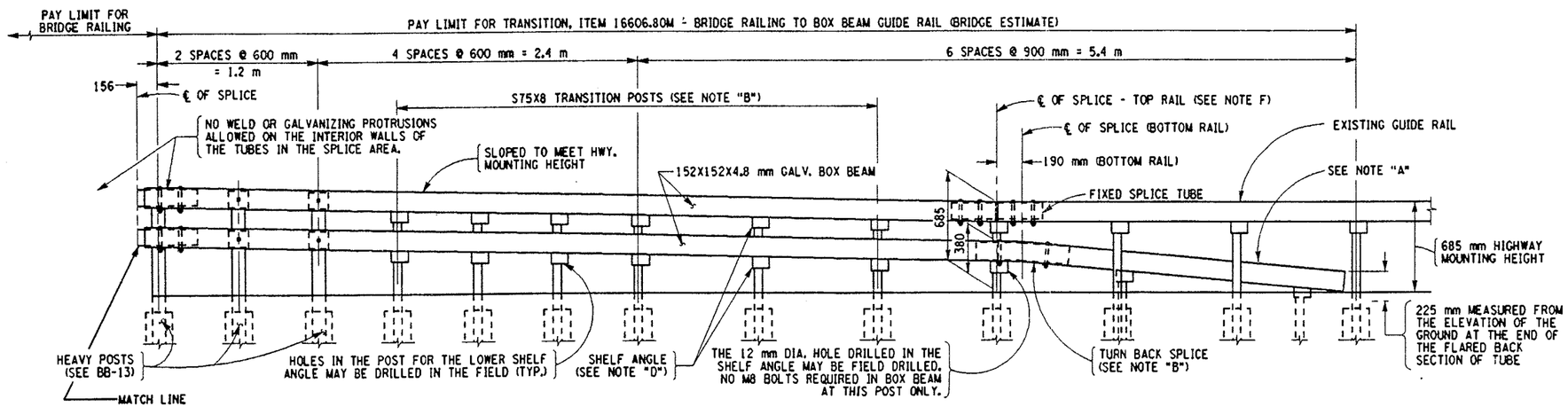

ELEVATION

SCALE 1:20

NOTE "A":
THE COST OF THE POSTS, SPLICE TUBE AND RAIL FOR THE LOWER TUBE FLARE SECTION IS INCLUDED IN THE PRICE BID FOR THE TRANSITION ITEM.

NOTE "B":
FOR ADDITIONAL DETAILS SEE DWG. BB-12 & 13.

NOTE "C":
PROTRUSIONS CAUSED BY WELDING OR GALVANIZING ARE NOT PERMITTED ON THE ADJOINING SURFACES OF THE BOX BEAM RAILS, SPLICE TUBES AND FILL PLATES.

NOTE "D":
SEE TYPICAL RAIL TO POST CONNECTION DETAIL ON CURRENT HIGHWAY STANDARD SHEET TITLED "BOX BEAM GUIDE RAIL".

NOTE "E":
PAVE THE OPTIONAL ASPHALT MOWING STRIP WITH THE HMA ASPHALT, PAYMENT WILL BE MADE UNDER HMA ITEM 06403.127202M

NOTE "F"
IF NECESSARY, THE LOCATION OF THE SPLICE OF THE TOP TRANSITION RAIL TUBE SHALL BE MOVED TO THE NEXT SPLICE IN THE EXISTING BOX BEAM GUIDE RAIL. THIS WILL INCREASE THE THE LENGTH OF TOP TRANSITION RAIL TUBE AND ELIMINATE ANY SHORT LENGTHS OF EXISTING BOX BEAM. COST TO BE INCLUDED IN THE PRICE BID FOR ITEM 16606.80M.

NOTES:

1. ALL STEEL SHALL BE GALVANIZED IN ACCORDANCE WITH N.Y.S. STANDARD SPECIFICATIONS, SUBSECTION 719-01. ALL AREAS WHERE THE ZINC COATING IS DAMAGED DURING INSTALLATION, INCLUDING FIELD DRILLING HOLES, SHALL BE REPAIRED ACCORDING TO SUBSECTION 719-01.
2. *THESE DETAILS APPLY TO BINS 1031751(2), 4031761(2), 1031771(2) AND 1093681(2).*

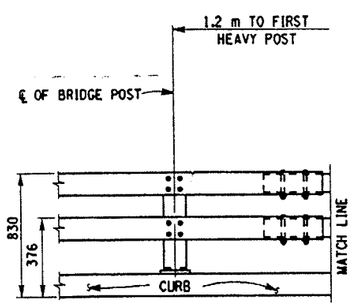

ELEVATION TWO RAIL WITH BRUSH CURB

SCALE 1:20

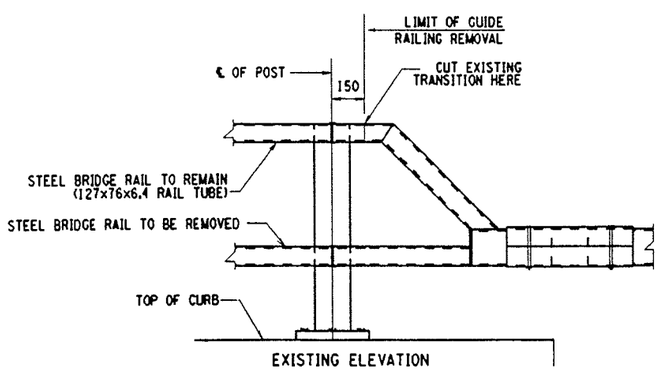

EXISTING RAIL END TREATMENT

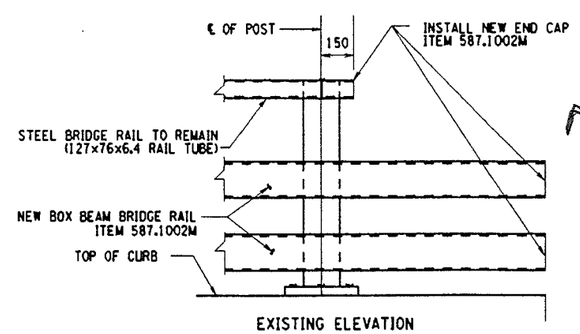

N/A

PROPOSED RAIL END TREATMENT

ALL DIMENSIONS ARE IN mm UNLESS OTHERWISE NOTED

AS BUILT REVISIONS

SIGNATURE | DATE

I-81 OVER CIRC. CHANNEL / CANAL / SWANP RD

BRIDGE RAIL TRANSITION DETAILS
1 OF 3 SHEETS

STATE OF NEW YORK
DEPARTMENT OF TRANSPORTATION

FILENAME	REGION	DATE	DRAWING NO.
380406BB.R1A	3	12/99	BB-11

DESIGN SUPERVISOR ____ JOB MANAGER ____ DESIGNED BY ____ ESTIMATED BY ____ DRAFTED BY ____ CHECKED BY ____ CHECKED BY ____

FED ROAD REG. NO.	STATE	CONTRACT NO.	SHEET NO.	TOTAL SHEETS
1	N.Y.	D258367	29	354

INTERSTATE BRIDGE DECK OVERLAY PROJECT
VARIOUS BRIDGES ON I-690, I-81 AND I-481
ONONDAGA AND OSWEGO COUNTIES

P.I.N. 3804.06 | B.I.N. SEE NOTE 1

NOTE "C":
PROTRUSIONS CAUSED BY WELDING OR GALVANIZING ARE NOT PERMITTED ON THE ADJOINING SURFACES OF THE BOX BEAM RAILS, SPLICE TUBES AND FILL PLATES.

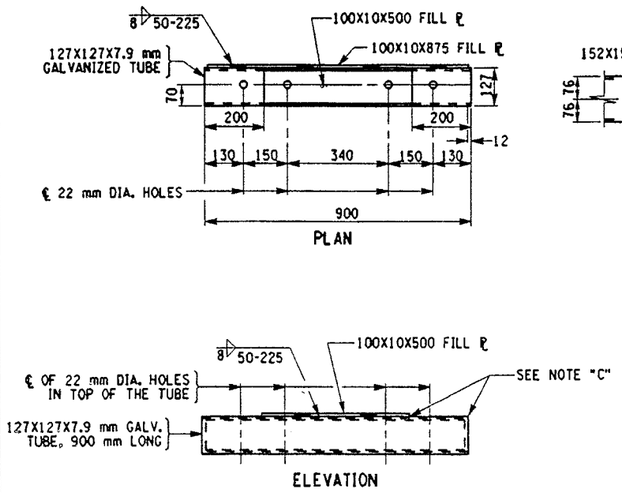

EXPANSION SPLICE TUBE
SCALE 1:10

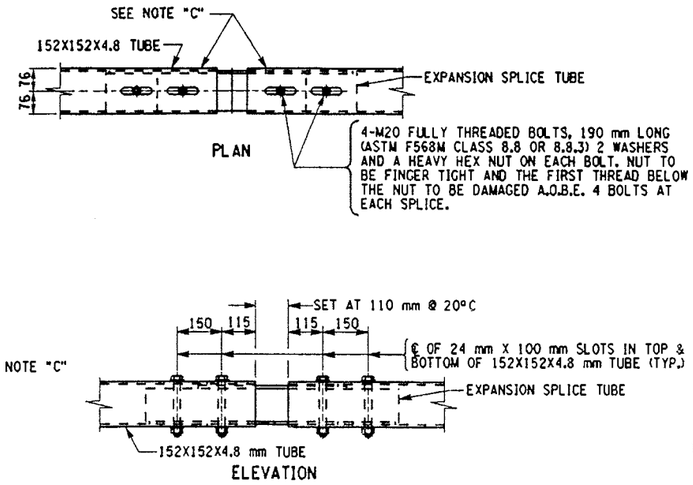

EXPANSION SPLICE ASSEMBLY
SCALE 1:10

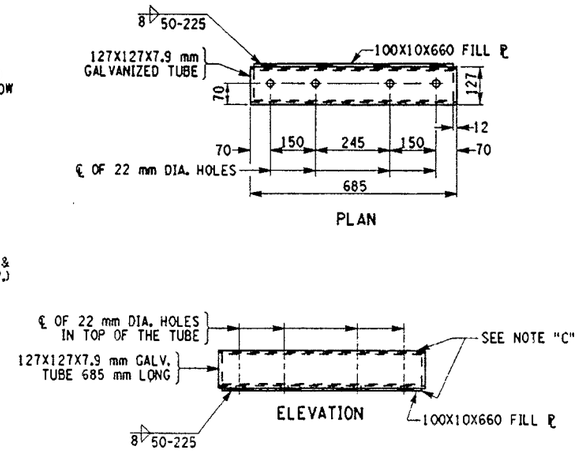

FIXED SPLICE TUBE
SCALE 1:10

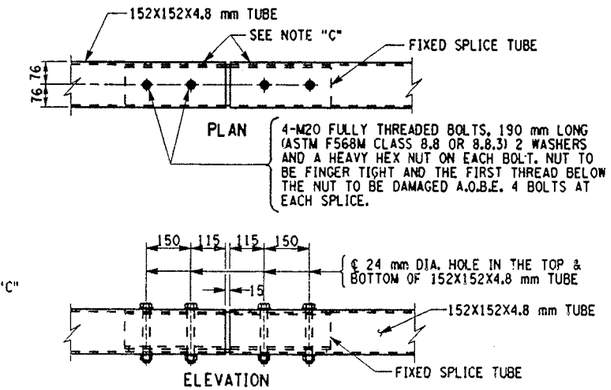

FIXED SPLICE ASSEMBLY
SCALE 1:10

SPLICE DETAILS FOR 152x152 TUBES

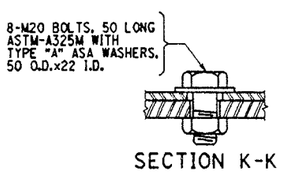

SECTION K-K

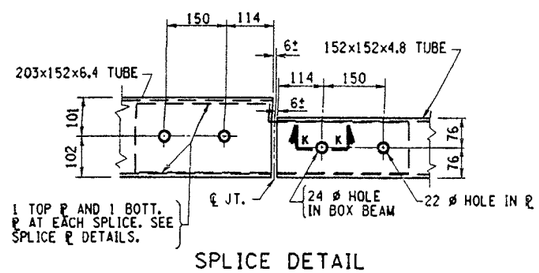

SPLICE DETAIL

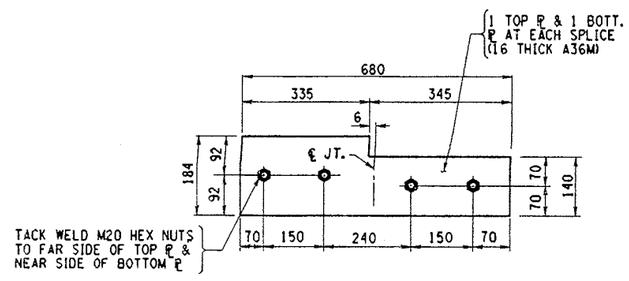

SPLICE PLATE DETAIL

SPLICE DETAILS FOR 203x152 TUBES

NOTES:

1. THESE DETAILS APPLY TO BINS 103175I(2), 403176I(2), 103177I(2) AND 109368I(2).

N/A

ALL DIMENSIONS ARE IN mm UNLESS OTHERWISE NOTED

AS BUILT REVISIONS

SIGNATURE | DATE

I-81 OVER CIRC. CHANNEL / CANAL / SWAMP RD

BRIDGE RAIL TRANSITION DETAILS
2 OF 3 SHEETS

STATE OF NEW YORK
DEPARTMENT OF TRANSPORTATION

FILENAME	REGION	DATE	DRAWING NO.
380406BB.R1A	3	12/99	BB-12

DESIGN SUPERVISOR ____ JOB MANAGER ____ DESIGNED BY ____ CHECKED BY ____ ESTIMATED BY ____ DRAFTED BY ____ CHECKED BY ____

DATE/TIME = 22-DEC-1999 11:08
USER = dksmith

FED ROAD REG. NO.	STATE	CONTRACT NO.	SHEET NO.	TOTAL SHEETS
1	N.Y.	D258367	30	354

INTERSTATE BRIDGE DECK OVERLAY PROJECT
VARIOUS BRIDGES ON I-690, I-81 AND I-481
ONONDAGA AND OSWEGO COUNTIES

P.I.N. 3804.06 | B.I.N. SEE NOTE 2

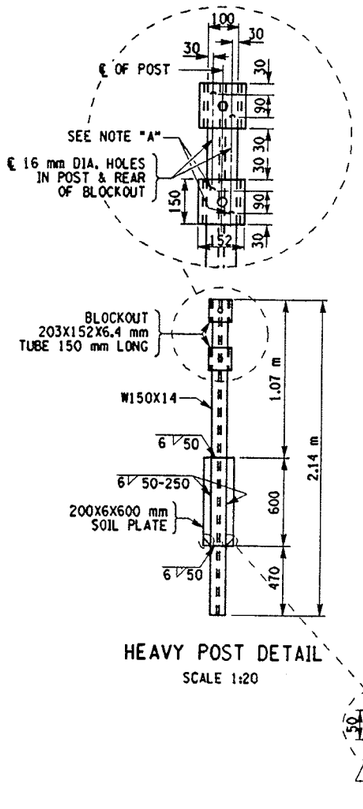

HEAVY POST DETAIL
SCALE 1:20

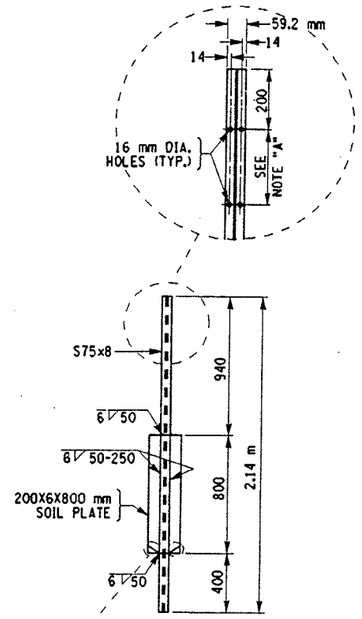

TRANSITION POST DETAIL
SCALE 1:20

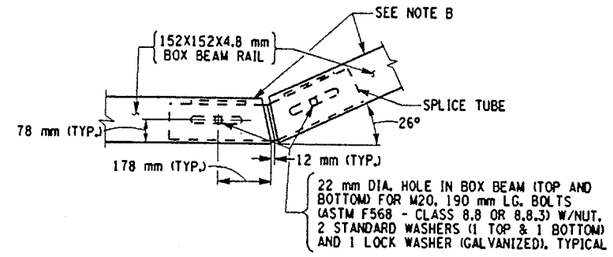

SPLICE DETAIL AT TURN BACK IN LOWER TRANSITION GUIDE RAIL
SCALE 1:10

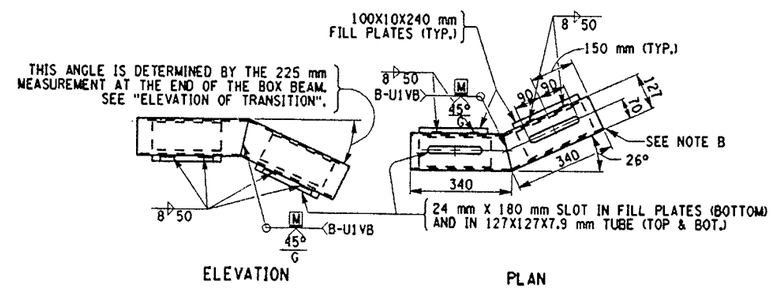

SPLICE TUBE DETAIL FOR TURN BACK
SCALE 1:10

NOTES:

1. FOR SPECIAL POST DETAIL, SEE DWG. CB-9.
2. FOR SPLICE DETAILS FOR THE 152X153X4.8 TUBES, SEE DWG. BB-12.
3. ALL STEEL SHALL BE GALVANIZED AFTER WELDING IN ACCORDANCE WITH THE N.Y.S. STANDARD SPECIFICATION SUBSECTION 719-01.

NOTE "A"
HOLES IN THE POST FOR THE LOWER RAIL MAY BE LOCATED AND DRILLED IN THE FIELD. IF SO, THE GALVANIZING SHALL BE REPAIRED IN ACCORDANCE WITH SUBSECTION 719-01.

NOTE "B"
PROTRUSIONS CAUSED BY WELDING OR GALVANIZING ARE NOT PERMITTED ON THE ADJOINING SURFACES OF THE BOX BEAM RAILS, SPLICE TUBES AND FILL PLATES.

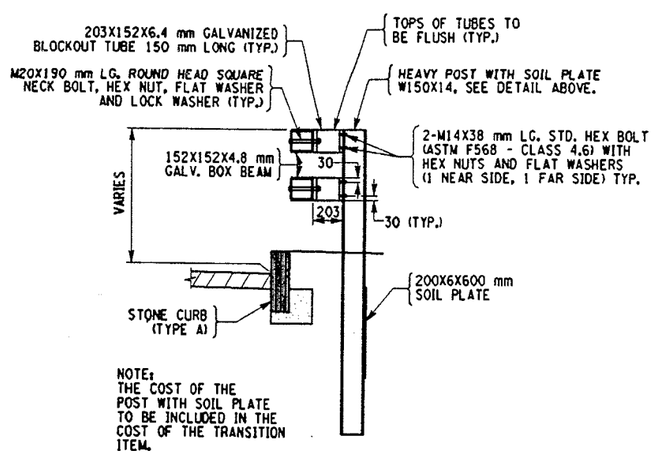

NOTE:
THE COST OF THE POST WITH SOIL PLATE TO BE INCLUDED IN THE COST OF THE TRANSITION ITEM.

HEAVY POST ELEVATION
SCALE 1:20

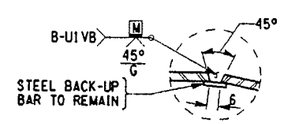

WELD DETAIL FOR SPLICE TUBE
NOT TO SCALE

N/A

ALL DIMENSIONS ARE IN mm UNLESS OTHERWISE NOTED

AS BUILT REVISIONS

SIGNATURE | DATE

I-81 OVER CIRC. CHANNEL / CANAL / SWAMP RD

BRIDGE RAIL TRANSITION DETAILS
3 OF 3 SHEETS

STATE OF NEW YORK
DEPARTMENT OF TRANSPORTATION

FILENAME	REGION	DATE	DRAWING NO.
380406BB.R1A	3	12/99	BB-13

DESIGN SUPERVISOR ____ JOB MANAGER ____ DESIGNED BY ____ ESTIMATED BY ____ DRAFTED BY ____ CHECKED BY ____ CHECKED BY ____

FED ROAD REG. NO.	STATE	CONTRACT NO.	SHEET NO.	TOTAL SHEETS
1	N.Y.	D258367	111	354

INTERSTATE BRIDGE DECK OVERLAY PROJECT
VARIOUS BRIDGES ON I-690, I-81 AND I-481
ONONDAGA AND OSWEGO COUNTIES

P.I.N. 3804.06 | B.I.N. 1093681 & 2

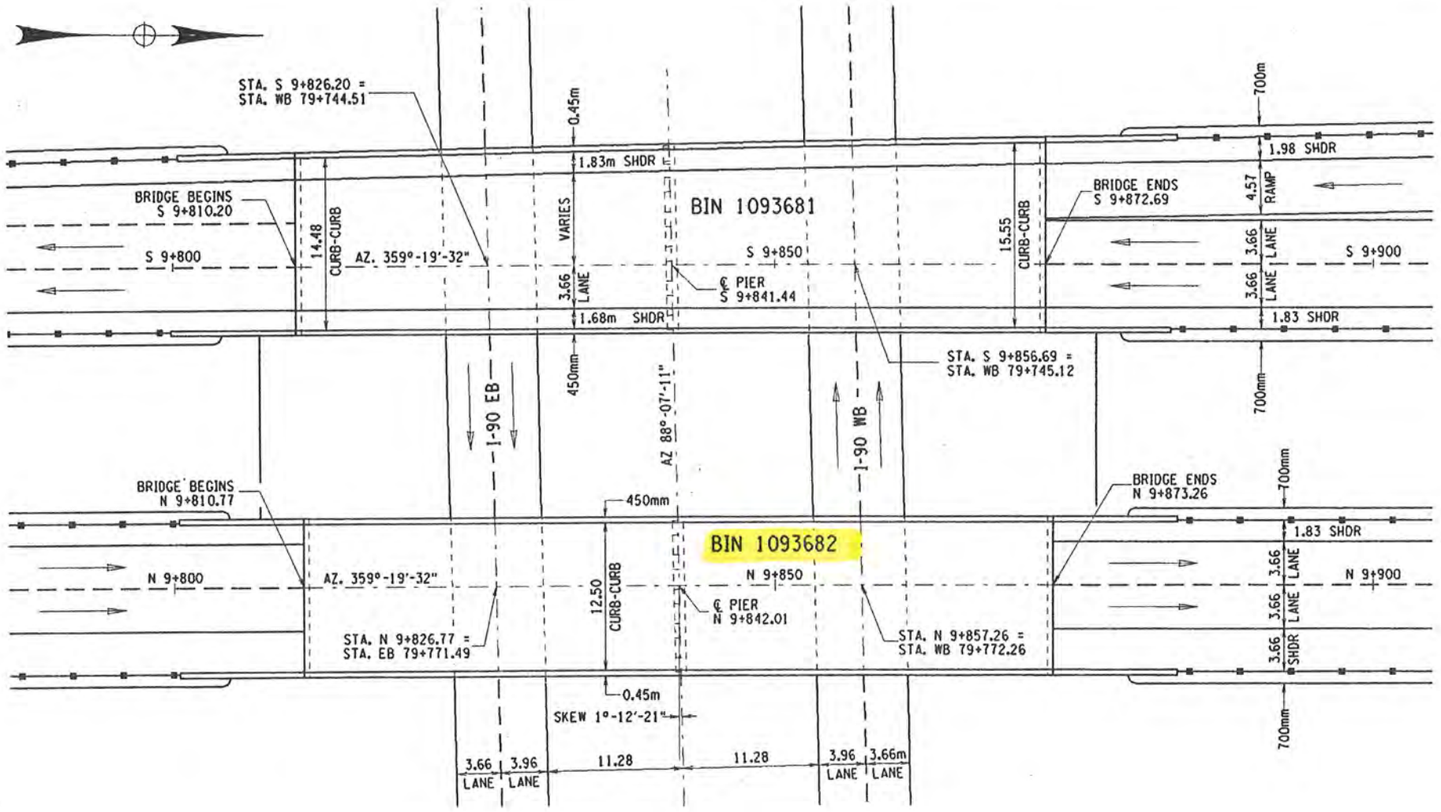

PLAN VIEW
SCALE: 1 TO 250

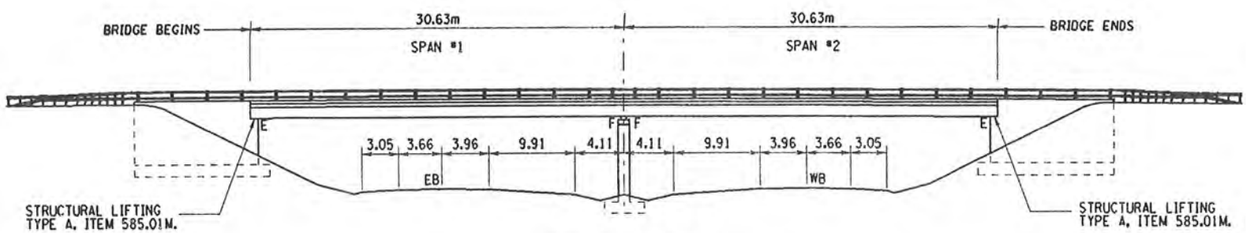

ELEVATION VIEW
SCALE: 1 TO 250

WORK TO BE DONE: (NOT NECESSARILY IN THIS ORDER)

1. REMOVE EXISTING CONCRETE WEARING SURFACE.
2. REMOVE EXISTING JOINTS.
3. EXPOSE RE-BARS ON 100% OF DECK AREA.
4. PLACE SLAB RECONSTRUCTION CONCRETE AND NEW CONCRETE OVERLAY.
5. PLACE NEW MAC JOINTS.
6. REPLACE EXISTING ABUTMENT BEARINGS.
7. PERFORM CONCRETE REPAIRS TO FASCIA.
8. REPLACE EXISTING BRIDGE RAIL AND RAIL TRANSITIONS.

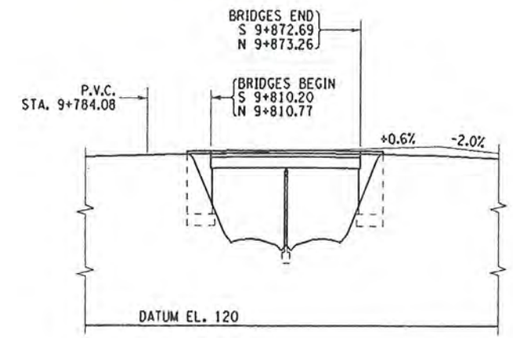

BEARING LOADS		
	ITEM 585.01M (ABUT.)	ITEM 585.01M (ABUT.)
	SPAN #1	SPAN #2 ABUTMENT
REACTION DUE TO DEAD LOAD	350 KN	350 KN
MAX. LL + I REACTION	250 KN	250 KN

MS LOAD RATING (LFD)	
INVENTORY	OPERATING
MS-17.23 (30.84 MT)	MS-33.56 (60.78 MT)

NOTE:

IF THE CONTRACTOR ELECTS TO LIFT ONLY ONE GIRDER AT A TIME PER SPAN (TO A MAXIMUM OF 3mm TO REMOVE LOAD FROM BEARING), NO VEHICULAR TRAFFIC RESTRICTIONS WILL BE REQUIRED AS STATED IN SPECIFICATION SECTION 585 - STRUCTURAL LIFTING OPERATIONS.

ALL DIMENSIONS ARE IN m UNLESS OTHERWISE NOTED

AS BUILT REVISIONS

SIGNATURE | DATE

I-481 OVER I-90

GENERAL PLAN VIEW AND ELEVATION

STATE OF NEW YORK
DEPARTMENT OF TRANSPORTATION

FILENAME	REGION	DATE	DRAWING NO.
380406GB.G1B	3	12/99	GB-1

CHECKED BY
DRAFTED BY
ESTIMATED BY
CHECKED BY
DESIGNED BY
JOB MANAGER
DESIGN SUPERVISOR
USER = gshubo

FED ROAD REG. NO.	STATE	CONTRACT NO.	SHEET NO.	TOTAL SHEETS
1	N.Y.	D258367	112	354

INTERSTATE BRIDG DECK REPAIR PROJECT

VARIOUS BRIDGES ON I-690, I-81 AND I-481

ONONDAGA AND OSWEGO COUNTIES

P.I.N. 3804.06 | B.I.N. 1093681 & 2

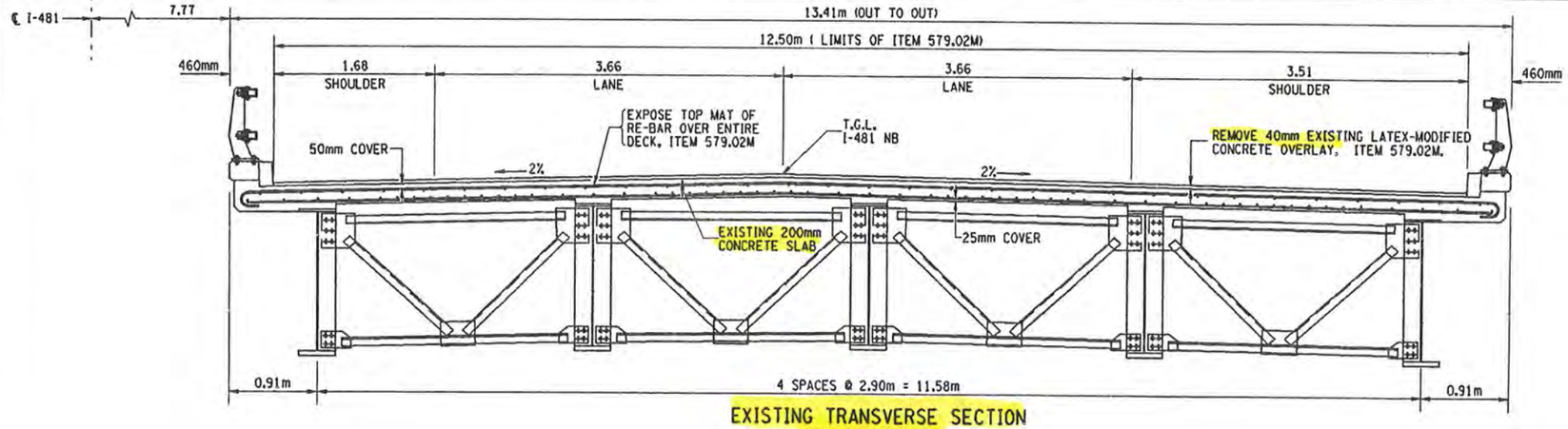

EXISTING TRANSVERSE SECTION
BIN 1093682 - NB

NOTES

1. SINCE THE OVERLAY ITEMS ARE SERIALIZED, ITEMS 578.030010M, AND 578.020010M SHALL BE USED FOR BIN 1093681, WHEREAS ITEMS 578.030011M AND 578.020011M SHALL BE USED FOR BIN 1093682.
2. FOR DECK REINFORCING DETAILS SEE DWG. SS-2.
3. FOR PROPOSED BRIDGE RAILING DETAILS SEE DWG. GB-10.

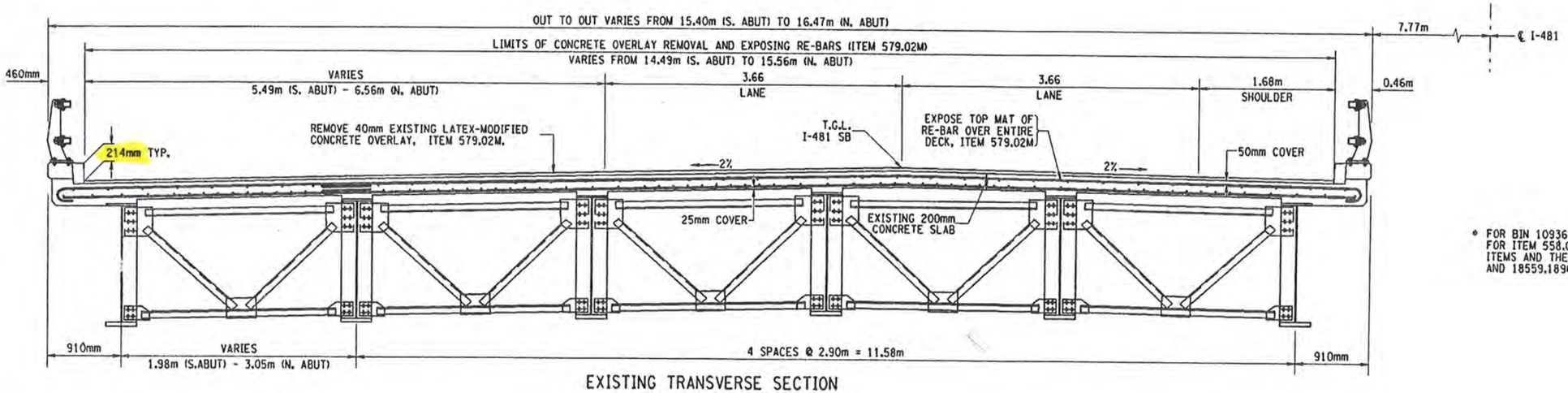

EXISTING TRANSVERSE SECTION
BIN 1093681 - SB

* FOR BIN 1093682, THESE DIMENSIONS DO NOT VARY. THE DIMENSION FOR ITEM 558.01M IS 12.20m AND THE DIMENSION FOR THE OVERLAY ITEMS AND THE SEALER ITEM (ITEMS 578.030010M, 578.020010M, AND 18559.1896M) IS 12.50m. THE OUTSIDE SHOULDER WIDTH IS 3.51m.

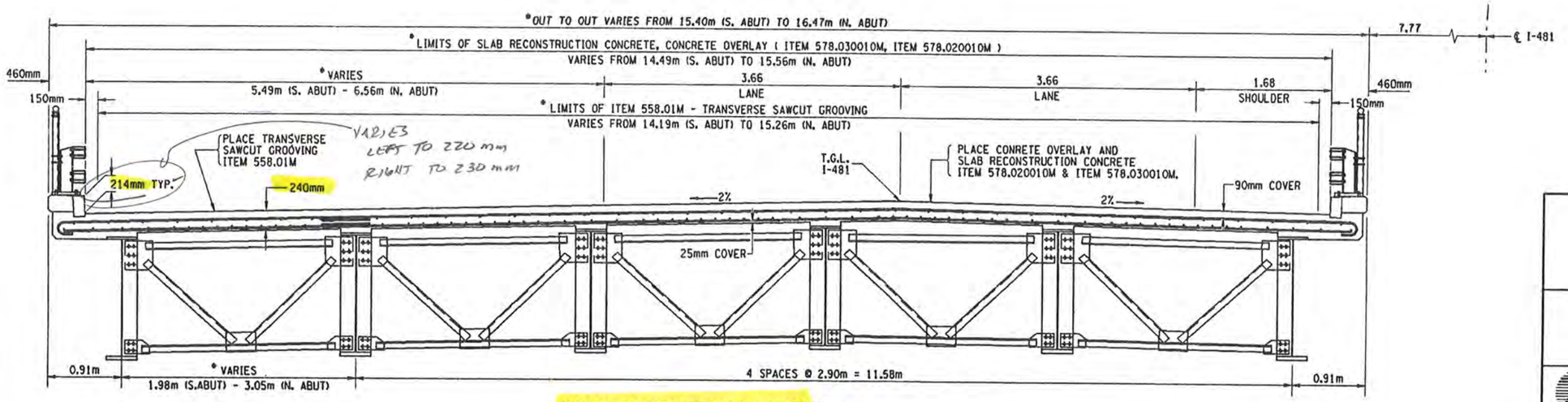

PROPOSED TRANSVERSE SECTION
BIN 1093681 (SB) SHOWN - BIN 1093682 (NB) SIMILAR

ALL DIMENSIONS ARE IN m UNLESS OTHERWISE NOTED

AS BUILT REVISIONS

SIGNATURE | DATE

I-481 OVER I-90

EXISTING AND PROPOSED TRANSVERSE SECTIONS

STATE OF NEW YORK
DEPARTMENT OF TRANSPORTATION

FILENAME	REGION	DATE	DRAWING NO.
380406GB.T1A	3	1/00	GB-2

CHECKED BY
DRAFTED BY
ESTIMATED BY
CHECKED BY
DESIGNED BY
JOB MANAGER
DESIGN SUPERVISOR

FED ROAD REG. NO.	STATE	CONTRACT NO.	SHEET NO.	TOTAL SHEETS
1	N.Y.	D258367	113	354

INTERSTATE BRIDGE DECK OVERLAY PROJECT
VARIOUS BRIDGES ON I-690, I-81 AND I-481
ONONDAGA AND OSWEGO COUNTIES

P.I.N. 3804.06 | B.I.N. 1093681 & 2

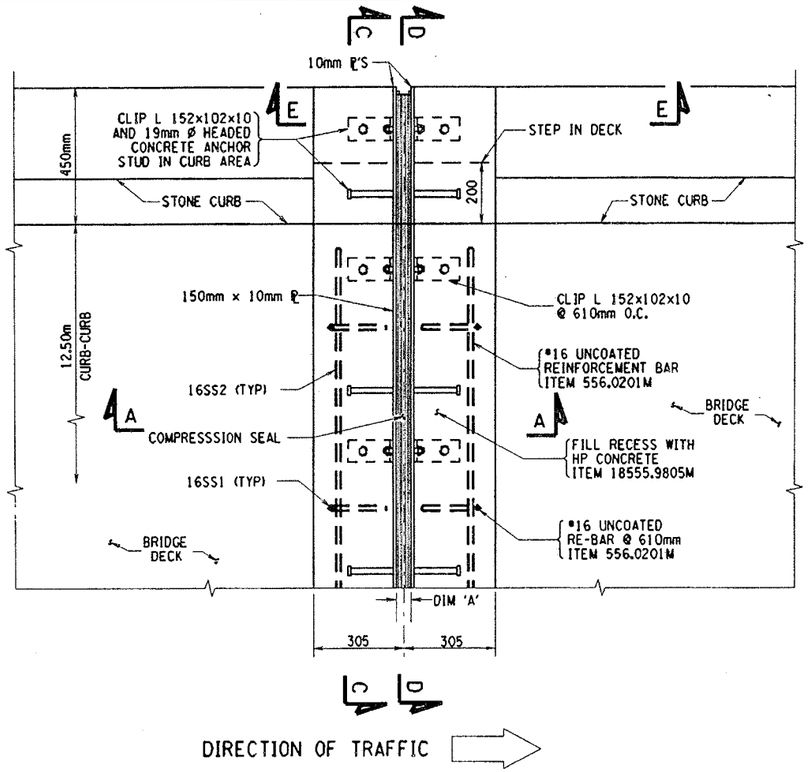

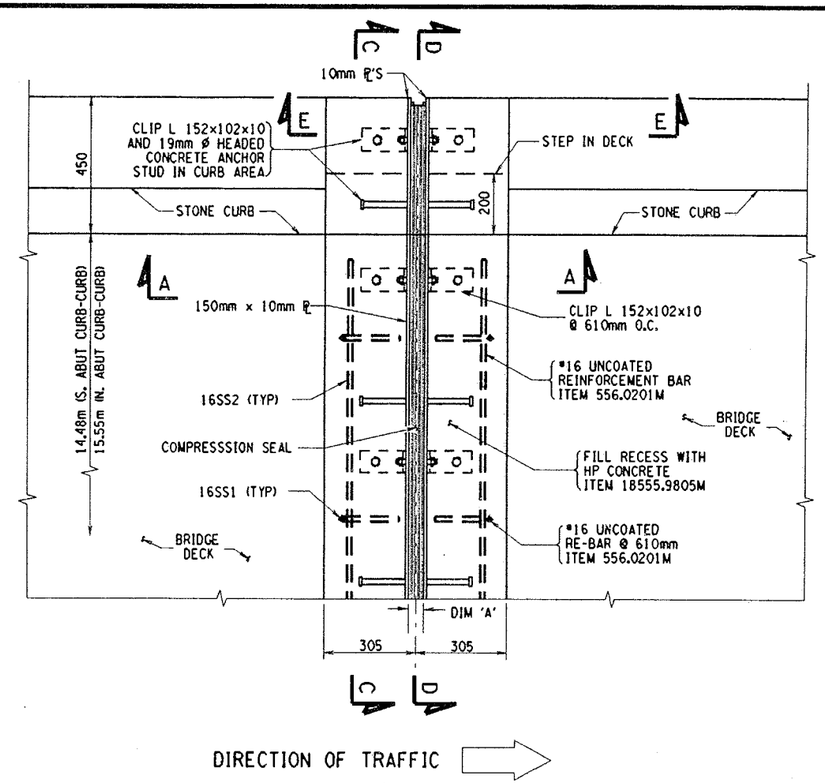

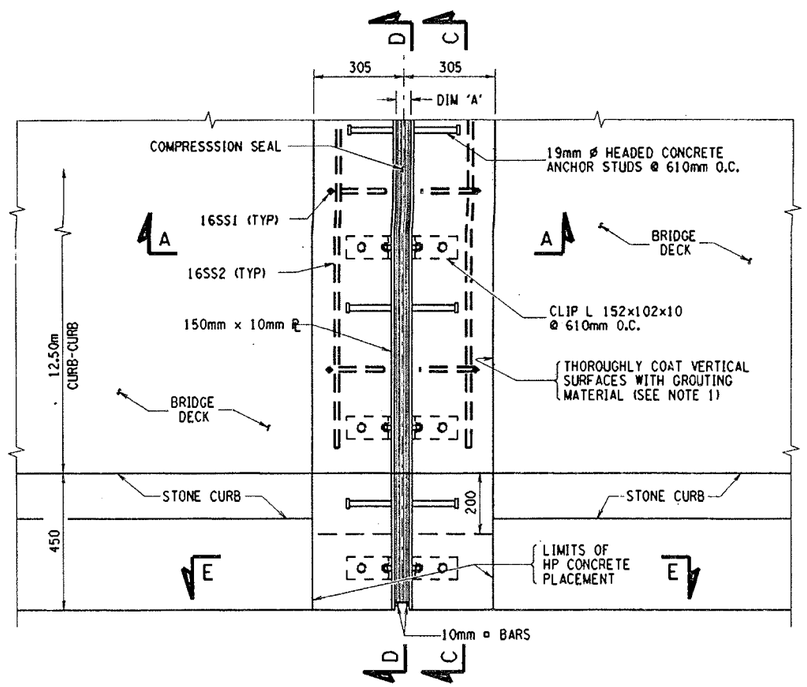

PROPOSED PIER JOINT PLAN VIEW
BIN 1093682 - PIER 1
SCALE: 1 TO 10

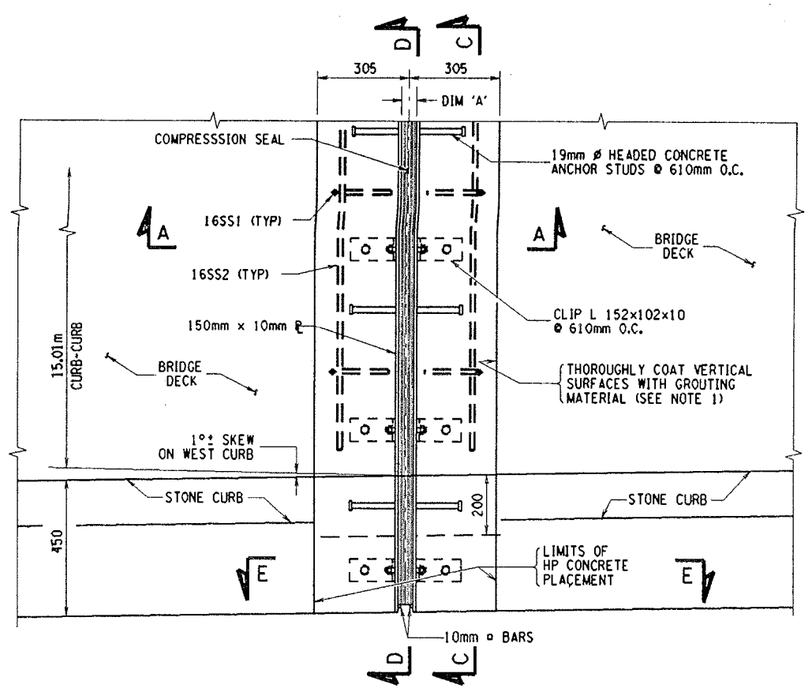

PROPOSED PIER JOINT PLAN VIEW
BIN 1093681 - PIER 1
SCALE: 1 TO 10

NOTES:

1. THOROUGHLY COAT THE BOTTOM AND VERTICAL SURFACES OF THE RECESS WITH MATERIAL SPEC. 721-03, EPOXY POLYSULFIDE GROUT, OR MATERIAL SPEC. 705-22, PORTLAND CEMENT MORTAR BONDING GROUT. THE COST OF FURNISHING AND PLACING THE MATERIAL SHALL BE INCLUDED IN THE PRICE BID FOR ITEM 18555.9805M.
2. SECTION A-A IS LOCATED ON DWG. GB-5.
3. SECTIONS C-C, D-D AND E-E ARE LOCATED ON DWG. GB-6
4. FOR GENERAL MAC JOINT DETAILS. SEE DWG. JT-3.
5. FOR PROPOSED MAC JOINT SIZE AND ITEM NUMBER FOR EACH JOINT, SEE JOINT TABLE ON DWGS. JT- 1-2.
6. FOR DETAILS OF THE ABUTMENT JOINTS, SEE DWG. GB-4.

ALL DIMENSIONS ARE IN mm UNLESS OTHERWISE NOTED

AS BUILT REVISIONS

SIGNATURE | DATE

I-481 OVER I-90

PROPOSED PIER JOINT PLAN VIEWS

STATE OF NEW YORK
DEPARTMENT OF TRANSPORTATION

FILENAME	REGION	DATE	DRAWING NO.
380406GB.J1A	3	12/99	GB-3

DESIGN SUPERVISOR ____ JOB MANAGER ____ DESIGNED BY ____ ESTIMATED BY ____ DRAFTED BY ____ CHECKED BY ____ CHECKED BY ____

USER = gshuba

FED ROAD REG. NO.	STATE	CONTRACT NO.	SHEET NO.	TOTAL SHEETS
1	N.Y.	D258367	114	354

INTERSTATE BRIDGE DECK OVERLAY PROJECT
VARIOUS BRIDGES ON I-690, I-81 AND I-481
ONONDAGA AND OSWEGO COUNTIES

P.I.N. 3804.06 | B.I.N. 1093681 & 2

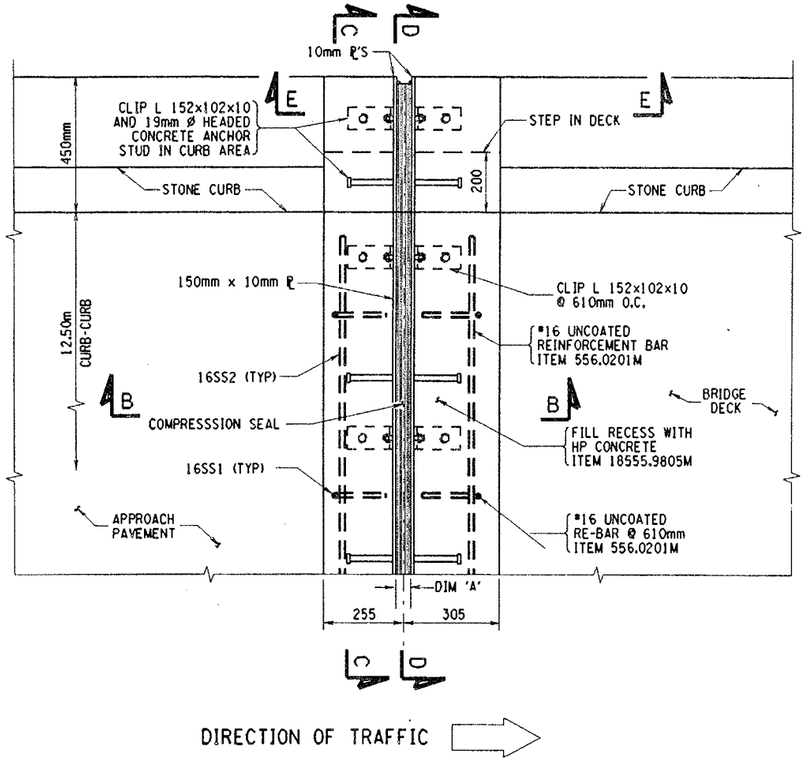

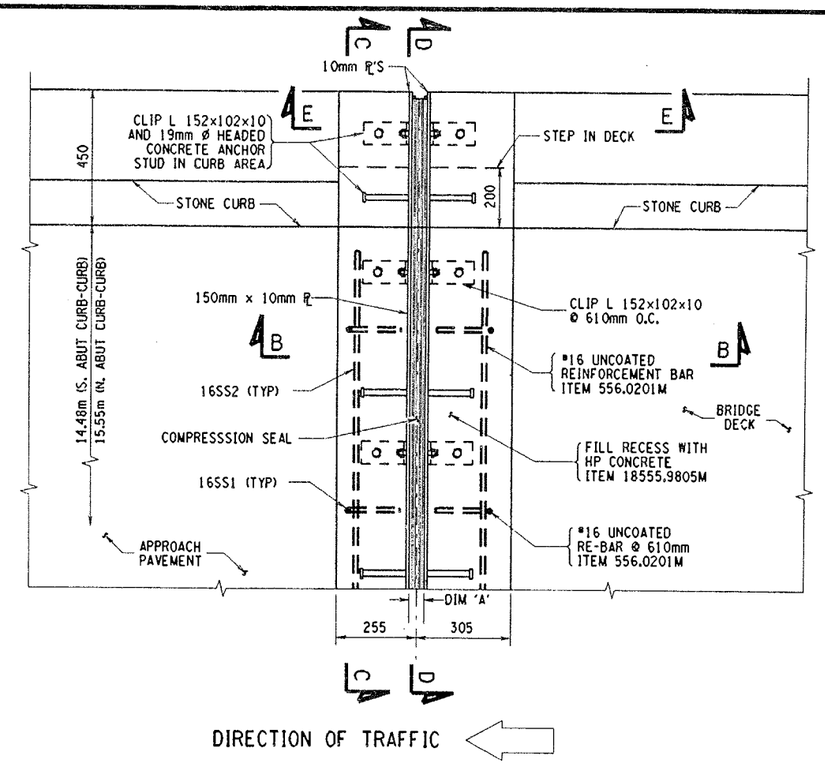

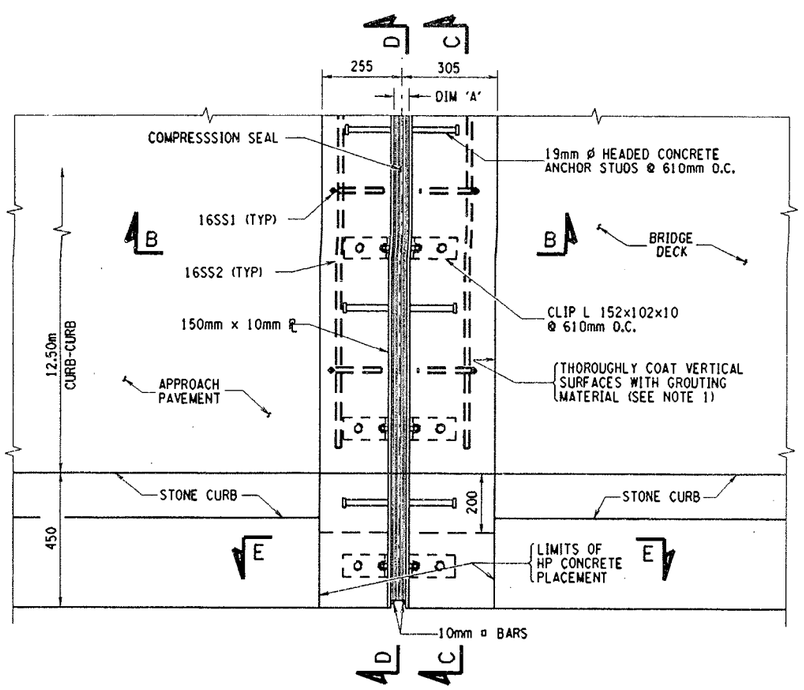

PROPOSED ABUTMENT JOINT PLAN VIEW
BIN 1093682 - BOTH ABUTS
S. ABUT SHOWN, N. ABUT OPPPOSITE
SCALE: 1 TO 10

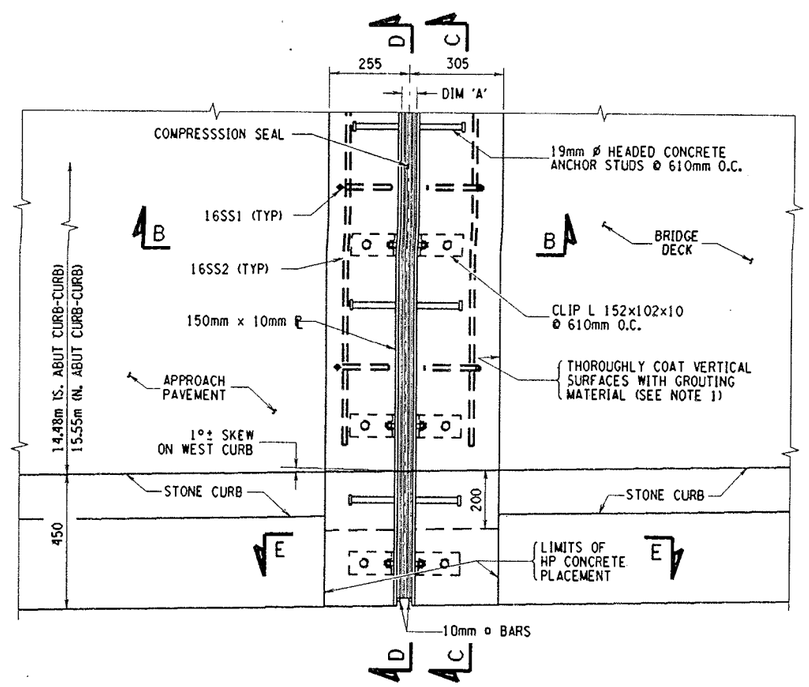

PROPOSED ABUTMENT JOINT PLAN VIEW
BIN 1093681 - BOTH ABUTS
S. ABUT SHOWN, N. ABUT OPPPOSITE
SCALE: 1 TO 10

NOTES:

1. THOROUGHLY COAT THE BOTTOM AND VERTICAL SURFACES OF THE RECESS WITH MATERIAL SPEC. 721-03, EPOXY POLYSULFIDE GROUT, OR MATERIAL SPEC. 705-22, PORTLAND CEMENT MORTAR BONDING GROUT. THE COST OF FURNISHING AND PLACING THE MATERIAL SHALL BE INCLUDED IN THE PRICE BID FOR ITEM 18555.9805M.
2. SECTION B-B IS LOCATED ON DWG. GB-5.
3. SECTIONS C-C, D-D AND E-E ARE LOCATED ON DWG. GB-6
4. FOR GENERAL MAC JOINT DETAILS, SEE DWG. JT-3.
5. FOR PROPOSED MAC JOINT SIZE AND ITEM NUMBER FOR EACH JOINT, SEE JOINT TABLE ON DWGS. JT- 1-2.
6. FOR DETAILS OF THE PIER JOINTS, SEE DWG. GB-3.

ALL DIMENSIONS ARE IN mm UNLESS OTHERWISE NOTED

AS BUILT REVISIONS

SIGNATURE | DATE

I-481 OVER I-90

PROPOSED ABUTMENT JOINT PLAN VIEWS

STATE OF NEW YORK
DEPARTMENT OF TRANSPORTATION

FILENAME	REGION	DATE	DRAWING NO.
380406GB.J1A	3	12/99	GB-4

DESIGN SUPERVISOR ___ JOB MANAGER ___ DESIGNED BY ___ CHECKED BY ___ ESTIMATED BY ___ DRAFTED BY ___ CHECKED BY ___

FED ROAD REG. NO.	STATE	CONTRACT NO.	SHEET NO.	TOTAL SHEETS
1	N.Y.	D258367	115	354

INTERSTATE BRIDGE DECK OVERLAY PROJECT
VARIOUS BRIDGES ON I-690, I-81 AND I-481
ONONDAGA AND OSWEGO COUNTIES

P.I.N. 3804.06 | B.I.N. 1093681 & 2

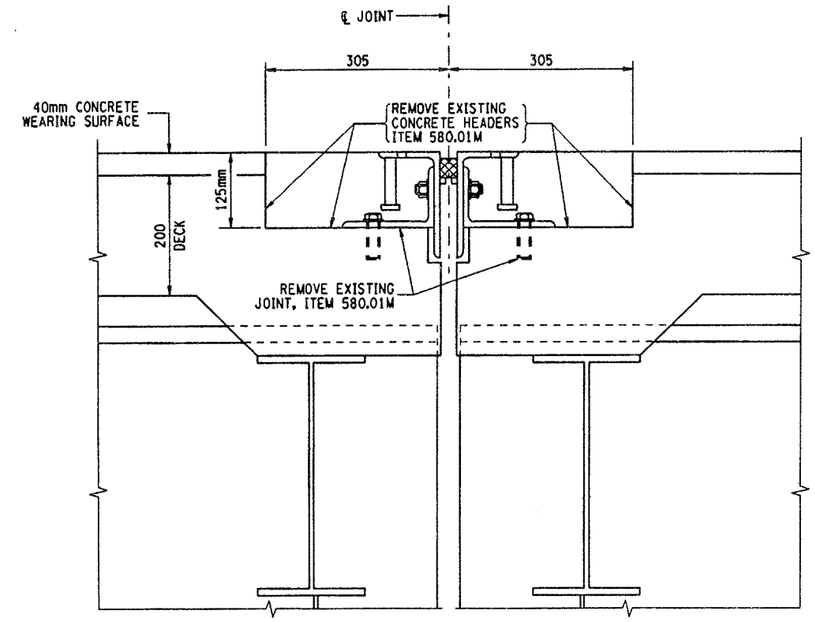

EXISTING SECTION A-A
BIN 1093681 - PIER 1
BIN 1093682 - PIER 2
SCALE: 1 TO 5

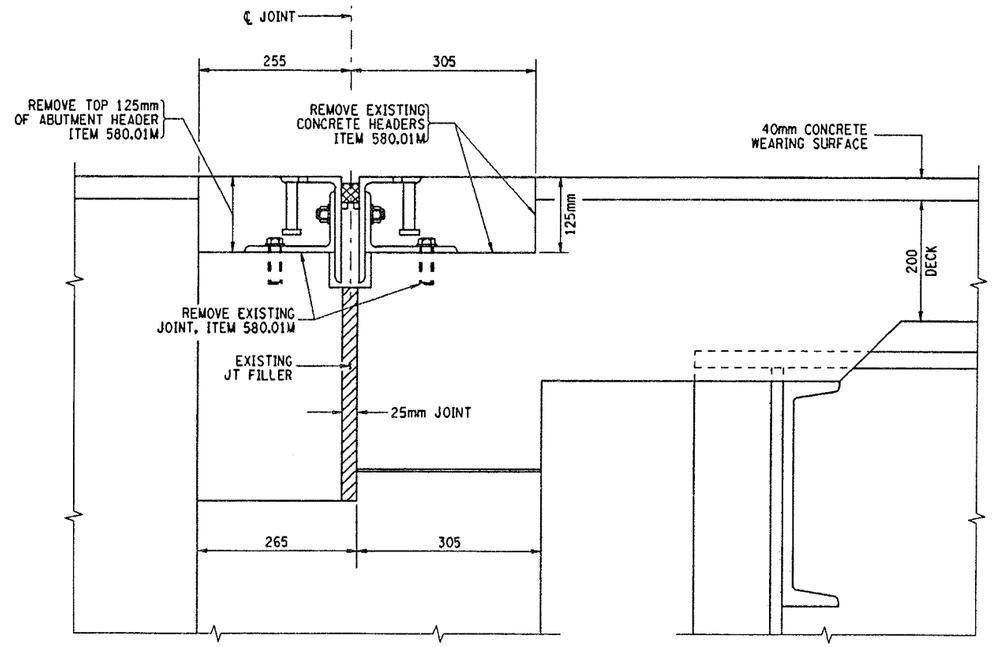

EXISTING SECTION B-B
BIN 1093681 - BOTH ABUTS
BIN 1093682 - BOTH ABUTS
SCALE: 1 TO 5

NOTES:

1. THOROUGHLY COAT THE BOTTOM AND VERTICAL SURFACES OF THE RECESS WITH MATERIAL SPEC. 721-03, EPOXY POLYSULFIDE GROUT, OR MATERIAL SPEC. 705-22, PORTLAND CEMENT MORTAR BONDING GROUT. THE COST OF FURNISHING AND PLACING THE MATERIAL SHALL BE INCLUDED IN THE PRICE BID FOR ITEM 18555.9805M.
2. SEE DWG. GB-4 FOR LOCATION OF SECTIONS A-A AND B-B.
3. FOR GENERAL MAC JOINT DETAILS SEE DWG. JT-3.
4. FOR PROPOSED MAC JOINT SIZE AND ITEM NUMBER FOR EACH JOINT, SEE JOINT TABLE ON DWGS. JT- 1-2.

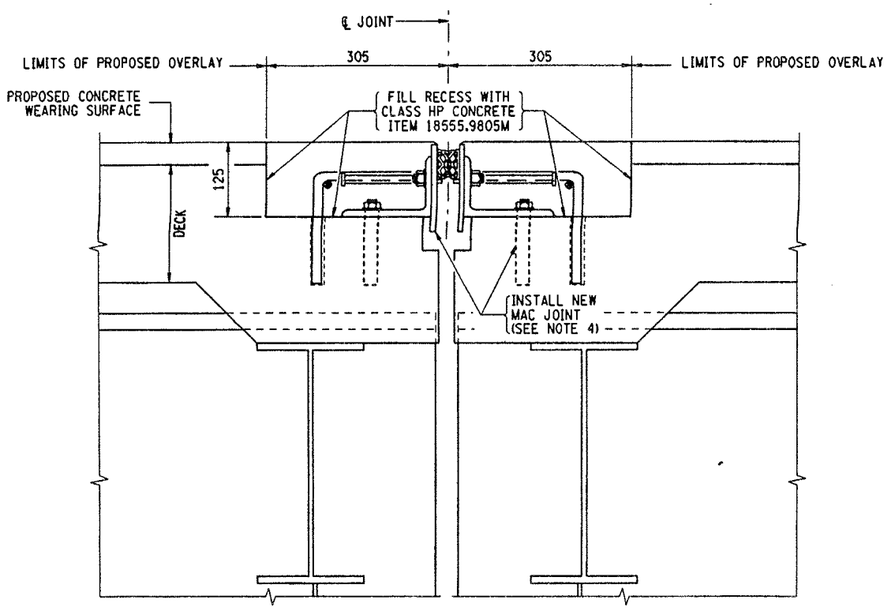

PROPOSED SECTION A-A
BIN 1093681 - PIER 1
BIN 1093682 - PIER 2
SCALE: 1 TO 5

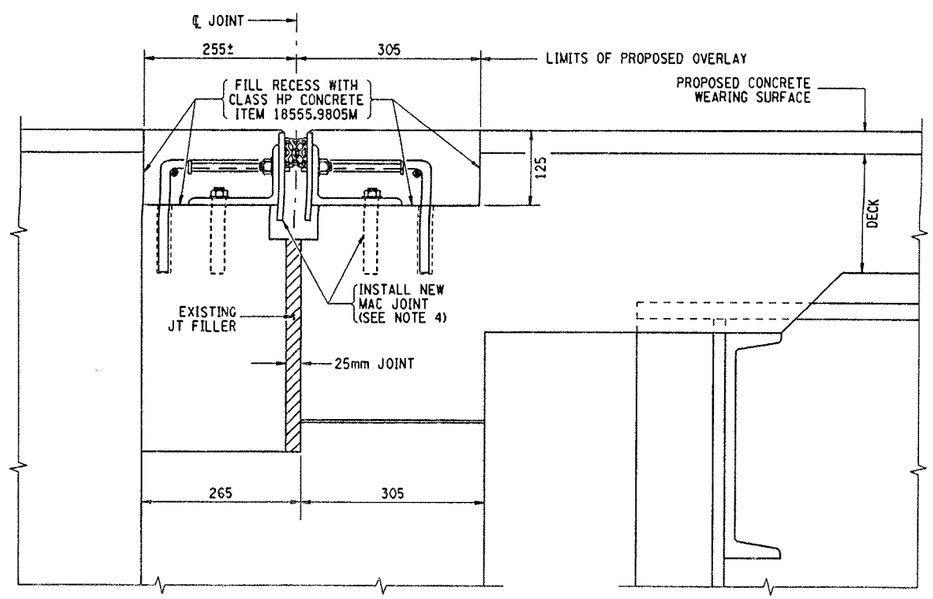

PROPOSED SECTION B-B
BIN 1093681 - BOTH ABUTS
BIN 1093682 - BOTH ABUTS
SCALE: 1 TO 5

ALL DIMENSIONS ARE IN mm UNLESS OTHERWISE NOTED

AS BUILT REVISIONS

SIGNATURE | DATE

I-481 OVER I-90

EXISTING AND PROPOSED CROSS SECTIONS

STATE OF NEW YORK
DEPARTMENT OF TRANSPORTATION

FILENAME	REGION	DATE	DRAWING NO.
380406GB.J1A	3	1/00	GB-5

CHECKED BY
DRAFTED BY
ESTIMATED BY
CHECKED BY
DESIGNED BY
JOB MANAGER
DESIGN SUPERVISOR
USER = DGN$USERNAME

FED ROAD REG. NO.	STATE	CONTRACT NO.	SHEET NO.	TOTAL SHEETS
1	N.Y.	D258367	116	354

INTERSTATE BRIDGE DECK OVERLAY PROJECT
VARIOUS BRIDGES ON I-690, I-81 AND I-481
ONONDAGA AND OSWEGO COUNTIES

P.I.N. 3804.06 | B.I.N. 1093681 & 2

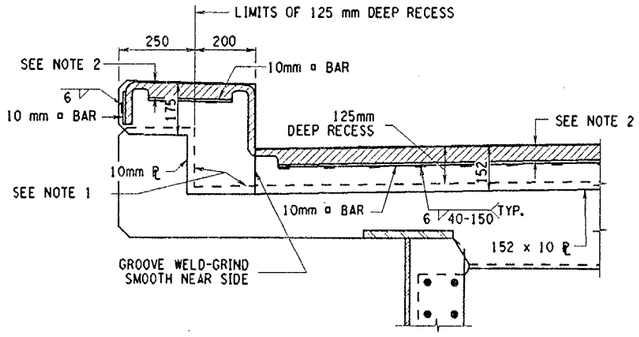

PROPOSED SECTION C-C
SCALE: 1 TO 10

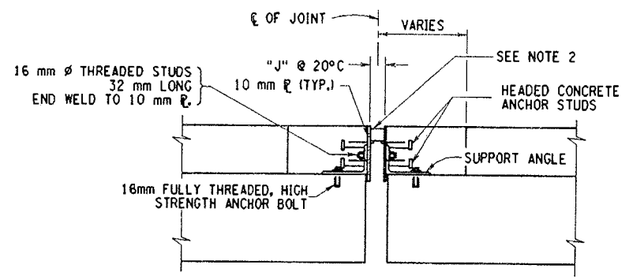

NOTE:
REINFORCEMENT NOT SHOWN

PROPOSED SECTION E-E
SCALE: 1 TO 10

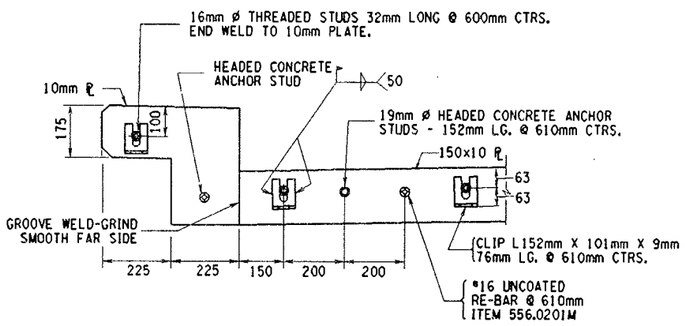

PROPOSED SECTION D-D
(ONLY THE STEEL SHOWN)
SCALE: 1 TO 10

NOTES:

1. THOROUGHLY COAT THE BOTTOM AND VERTICAL SURFACES OF THE RECESS WITH MATERIAL SPEC. 721-03, EPOXY POLYSULFIDE GROUT, OR MATERIAL SPEC. 705-22, PORTLAND CEMENT MORTAR BONDING GROUT. THE COST OF FURNISHING AND PLACING THE MATERIAL SHALL BE INCLUDED IN THE PRICE BID FOR ITEM 18555.9805M.
2. THIS DEPTH SHALL BE INDICATED ON THE SHOP DRAWINGS AND SHALL BE SUCH THAT WHEN THE SEAL IS COMPRESSED TO 50% OF ITS NORMAL WIDTH, THE TOP OF THE SEAL SHALL BE NOT LESS THAN 6mm NOR MORE THAN 19mm BELOW THE TOP OF THE ROADWAY.
3. FOR LOCATIONS OF SECTIONS C-C, D-D AND E-E, SEE DWG. GB-3,4.
4. FOR GENERAL MAC JOINT DETAILS, SEE DWG. JT-3.
5. FOR PROPOSED MAC JOINT SIZE AND ITEM NUMBER FOR EACH JOINT, SEE JOINT TABLE ON DWGS. JT- 1-2.

ALL DIMENSIONS ARE IN mm UNLESS OTHERWISE NOTED

AS BUILT REVISIONS

SIGNATURE | DATE

I-481 OVER I-90

PROPOSED JOINT DETAILS
FASCIA SECTIONS

STATE OF NEW YORK
DEPARTMENT OF TRANSPORTATION

FILENAME	REGION	DATE	DRAWING NO.
380406GB.J1A	3	12/99	GB-6

DESIGN SUPERVISOR ____ JOB MANAGER ____ DESIGNED BY ____ ESTIMATED BY ____ DRAFTED BY ____ CHECKED BY ____ CHECKED BY ____

FED ROAD REG. NO.	STATE	CONTRACT NO.	SHEET NO.	TOTAL SHEETS
1	N.Y.	D258367	117	354

INTERSTATE BRIDGE DECK REPAIR PROJECT
VARIOUS BRIDGES ON I-690, I-81 AND I-481
ONONDAGA AND OSWEGO COUNTIES

P.I.N. 3804.06 | B.I.N. 1093681 & 2

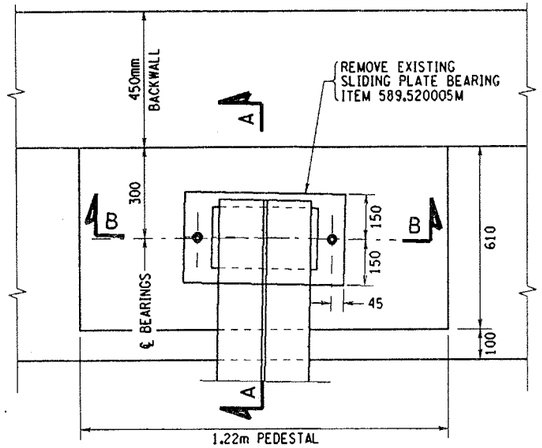

DETAIL 'A'
WEST BEARINGS AT SB. ABUTMENTS
SCALE: 1 TO 10

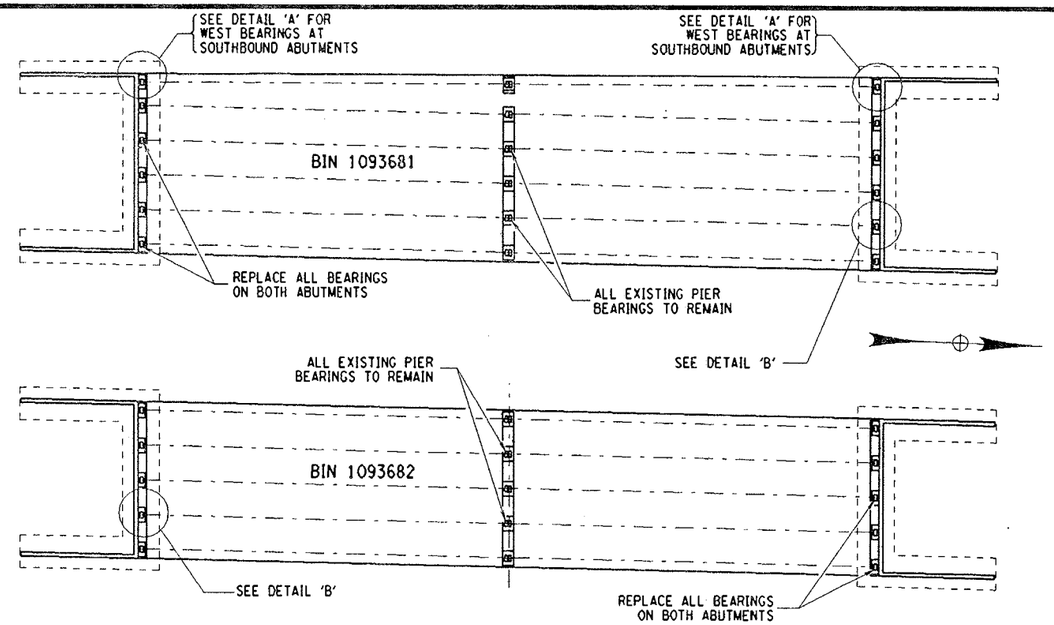

BRIDGE PLAN SCHEMATIC
SCALE: 1 TO 250

NOTES:

1. REMOVE PAINT FROM ALL SPECIFIED PARTS BEFORE REMOVING ANY WELD. PAINT SHALL BE REMOVED TO 100mm (MIN) FROM THE WELDS, ITEM 16570.72M.
2. THE PREFERRED METHOD OF WELD REMOVAL IS AIR-ARC GOUGE.
3. ONCE THE NEW BEARINGS HAVE BEEN INSTALLED, ALL EXPOSED AREAS ON THE GIRDER SHALL BE RE-PAINTED, ITEM 16570.32M.
4. IN CONJUNCTION WITH THE USE OF ITEM 16570.72M - LOCALIZED VACUUM CONTAINED CLEANING STRUCT. STEEL, ITEM 18574.101007M OR ITEM 18574.101008M - CLASS B. CONTAINMENT SYSTEM AND ITEM 571.010007M OR ITEM 571.010008M- TREATMENT & DISPOSAL OF PAINT REMOVAL WASTE, SHALL ALSO BE INCORPORATED DURING THE PAINT REMOVAL OPERATION.
5. ALL BEARING REPLACEMENT WORK SHALL INCLUDE STRUCUTRAL LIFTING, TYPE A, ITEM 580.01M.

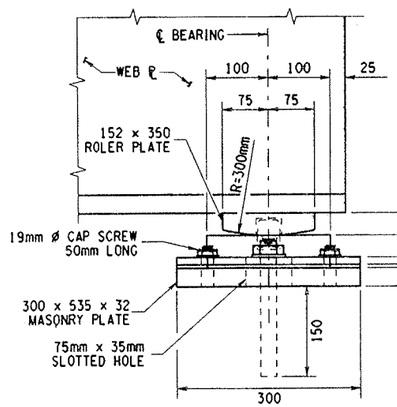

SECTION A-A
SCALE: 1 TO 5

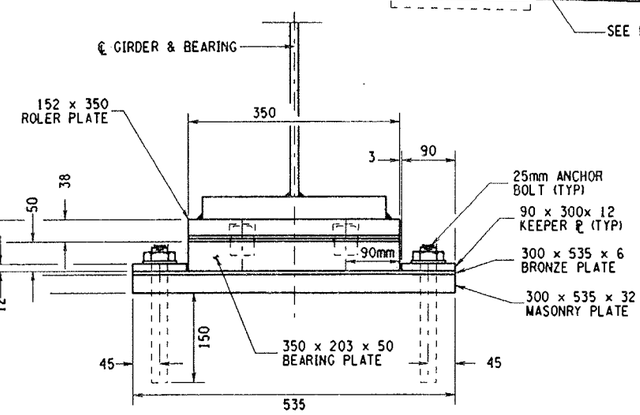

SECTION B-B
SCALE: 1 TO 5

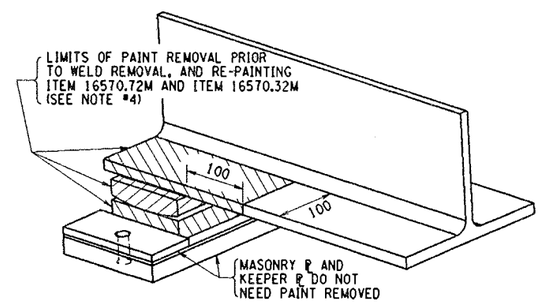

PAINT REMOVAL DETAIL
WEST BEARINGS AT SB. ABUTMENTS
SCALE: 1 TO 5

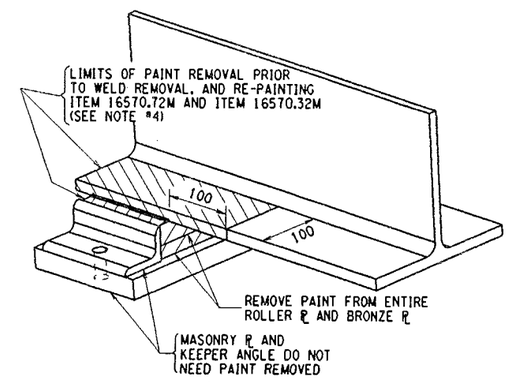

PAINT REMOVAL DETAIL
ALL BEARING EXCEPT WEST
BEARINGS AT SB. ABUTMENTS
SCALE: 1 TO 5

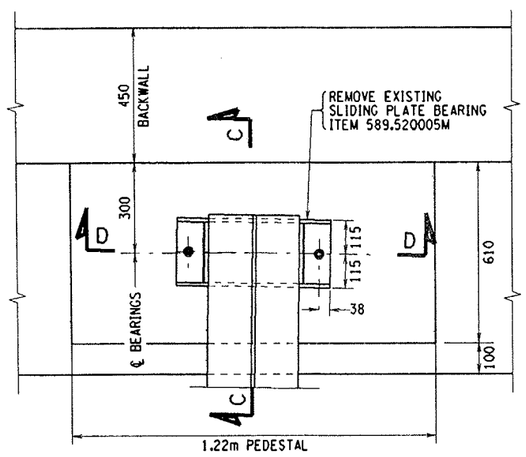

DETAIL 'B'
ALL BEARING EXCEPT WEST
BEARINGS AT SB. ABUTMENTS
SCALE: 1 TO 10

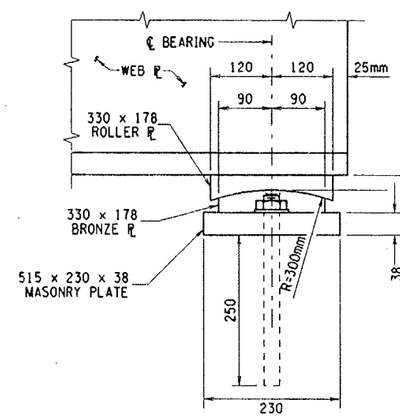

SECTION C-C
SCALE: 1 TO 5

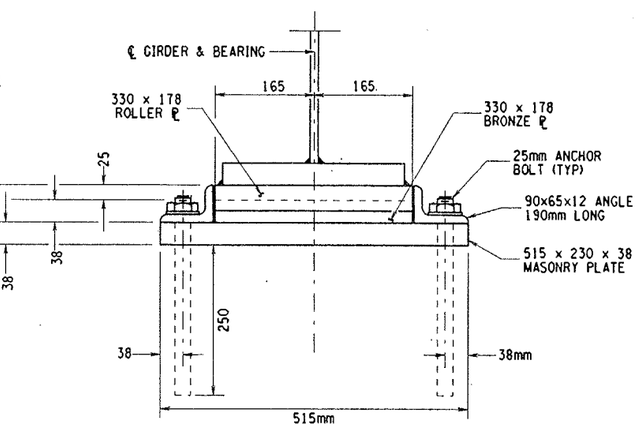

SECTION D-D
SCALE: 1 TO 5

ALL DIMENSIONS ARE IN mm UNLESS OTHERWISE NOTED

AS BUILT REVISIONS

SIGNATURE | DATE

I-481 OVER I-90

EXISTING BEARING DETAILS

STATE OF NEW YORK
DEPARTMENT OF TRANSPORTATION

FILENAME	REGION	DATE	DRAWING NO.
380406GB.S1A	3	12/99	GB-7

DESIGN SUPERVISOR ___ JOB MANAGER ___ DESIGNED BY ___ DRAFTED BY ___ ESTIMATED BY ___ CHECKED BY ___ CHECKED BY ___

USER = gshubs

FED ROAD REG. NO.	STATE	CONTRACT NO.	SHEET NO.	TOTAL SHEETS
1	N.Y.	D258367	118	354

INTERSTATE BRIDGE DECK REPAIR PROJECT
VARIOUS BRIDGES ON I-690, I-81 AND I-481
ONONDAGA AND OSWEGO COUNTIES

P.I.N. 3804.06 | B.I.N. 1093681 & 2

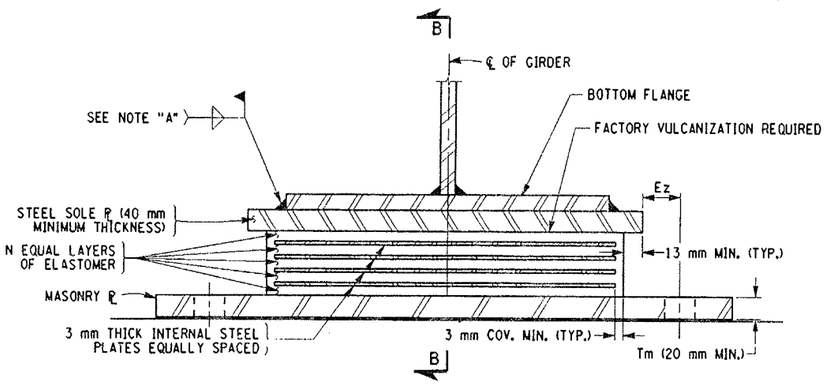

TYPICAL EXPANSION BEARING ELEVATION
NOT TO SCALE

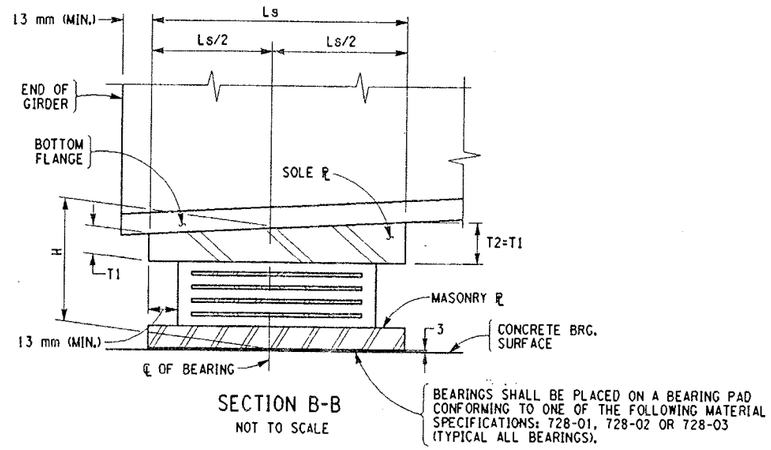

SECTION B-B
NOT TO SCALE

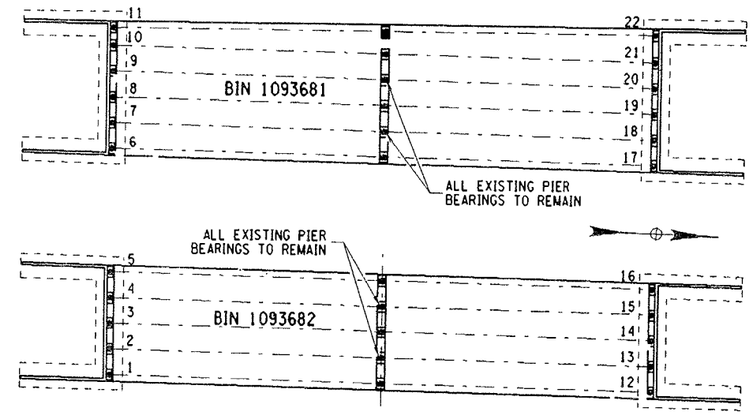

BRIDGE PLAN SCHEMATIC
NO SCALE

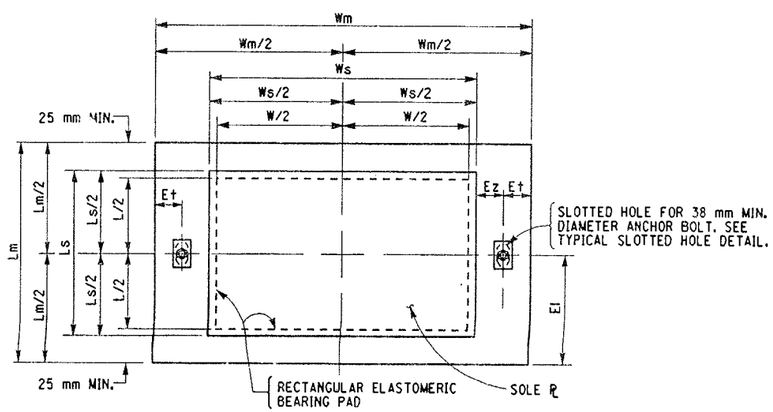

TYPICAL RECTANGULAR EXPANSION BEARING PLAN
NOT TO SCALE

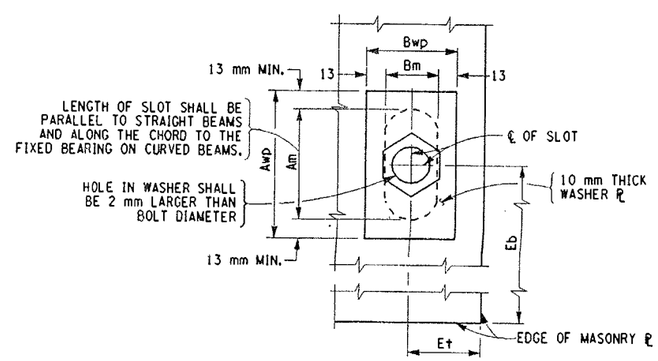

TYPICAL SLOTTED HOLE DETAIL
MASONRY PLATE
NOT TO SCALE

NOTES:

INSTALLATION ALIGNMENT:
THE MAXIMUM VARIATION FROM PERFECT ALIGNMENT UNDER FULL DEAD LOAD SHALL NOT EXCEED 4 mm. THIS VARIATION SHALL BE MEASURED AS THE HORIZONTAL DISTANCE BETWEEN THE CENTERLINE OF THE HIGHEST ELASTOMER SURFACE AND THE CENTERLINE OF THE LOWEST ELASTOMER SURFACE.

CONCRETE SURFACES UNDER THE BEARINGS SHALL CONFORM TO SUBSECTION 565-3.02 "CONCRETE BEARING SURFACE PREPARATION" OF THE NEW YORK STATE STANDARD SPECIFICATIONS, CONSTRUCTION AND MATERIALS.

ALL STEEL EXCEPT INTERNAL STEEL PLATES SHALL CONFORM TO ASTM A588M, F_y = 345 MPa, UNLESS OTHERWISE NOTED.

THE BEARINGS SHALL MEET THE REQUIREMENTS OF STANDARD SPECIFICATION SECTION 565 UNLESS OTHERWISE NOTED.

ANCHOR BOLTS, WASHERS, WASHER PLATES AND NUTS SHALL MEET THE REQUIREMENTS OF SUBSECTION 723-60. THEIR COST, INCLUDING GALVANIZING, SHALL BE INCLUDED IN THE UNIT PRICE BID FOR THE BEARING ITEM.

ALL DIMENSIONS ARE SHOWN IN MILLIMETERS UNLESS OTHERWISE NOTED.

EXPANSION ELASTOMERIC BEARING (TYPE E.B.) TABLE

LOCATION	ITEM NO.	QUANTITY REQUIRED	DL+SDL (kN)	LL W/O IMP. (kN)	TOTAL DESIGN REACTION (kN)	SHAPE FACTOR	ELASTOMER LAYERS					h_{rt} (mm)	COMP. AREA (sq. mm)	SHEAR AREA (sq. mm)	MASONRY PLATE							ANCHOR BOLTS		WELD SIZE	NUMBER OF CAP SCREWS	WASHER ℙ		SOLE PLATE				BRG. H
							THK/LAYER	N LAYERS	L	W	D				Tm	Wm	Lm	Et	Ei	Am	Bm	ø	BOLTS/BRG.			Awp	Bwp	Ws	Ls	T1	T2	
1 - 10	565.2002M	10	327.5	222.7	550.2	8.2	12mm	4	350	450	---	48	152735	157500	25	725	405	75	110	80	50	38	2	8	--	105	75	485	380	40	40	124
11. 22	565.2002M	2	327.5	222.7	550.2	8.2	12mm	4	350	450	---	48	152735	157500	35	725	405	75	110	80	50	38	2	8	--	105	75	485	380	40	40	126
12 - 21	565.2002M	10	327.5	222.7	550.2	8.2	12mm	4	350	450	---	48	152735	157500	25	725	405	75	110	80	50	38	2	8	--	105	75	485	380	40	40	124

ALL DIMENSIONS ARE IN mm UNLESS OTHERWISE NOTED

AS BUILT REVISIONS

SIGNATURE | DATE

I-481 OVER I-90

PROPOSED ELASTOMERIC BEARING DETAILS

STATE OF NEW YORK
DEPARTMENT OF TRANSPORTATION

FILENAME	REGION	DATE	DRAWING NO.
3804060B.S1A	3	12/99	GB-8

CHECKED BY
DRAFTED BY
ESTIMATED BY
CHECKED BY
DESIGNED BY
JOB MANAGER
DESIGN SUPERVISOR

FED ROAD REG. NO.	STATE	CONTRACT NO.	SHEET NO.	TOTAL SHEETS
1	N.Y.	D258367	119	354

INTERSTATE BRIDGE DECK REPAIR PROJECT

VARIOUS BRIDGES ON I-690, I-81 AND I-481

ONONDAGA AND OSWEGO COUNTIES

P.I.N. 3804.06 | B.I.N. 1093681 & 2

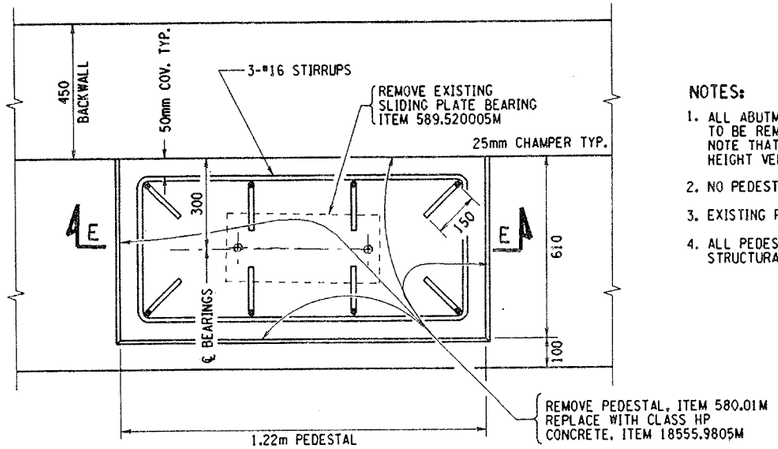

PEDESTAL PLAN VIEW

SCALE: 1 TO 10

NOTES:

1. ALL ABUTMENT PEDESTALS ON BOTH BRIDGES (NB & SB) ARE TO BE REMOVED AND REPLACED TO DIMENSIONS SHOWN, AOBE. NOTE THAT THE PROPOSED BEARINGS HAVING A 124mm HEIGHT VERSUS THE EXISTING BEARING HEIGHT OF 102mm.
2. NO PEDESTAL OR PIER WORK IS REQUIRED AT THE PIERS.
3. EXISTING REINFORCEMENT TO REMAIN.
4. ALL PEDESTAL REPLACEMENT WORK SHALL INCLUDE STRUCTURAL LIFTING, TYPE A, ITEM 585.01M.

THE ONLY FASCIA REPAIR LOCATION IS ON THE EAST SIDE OF BIN 1093682.

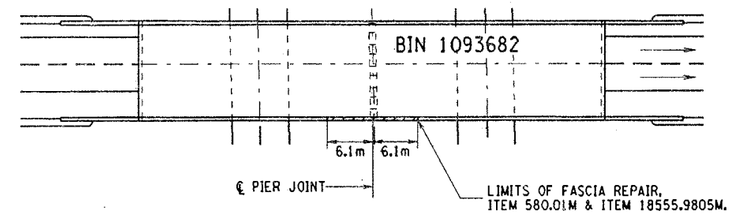

FASCIA REPAIR LOCATION PLAN
BIN 1093682

NOT TO SCALE

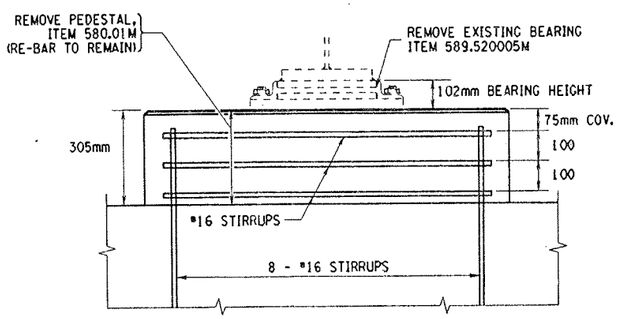

EXISTING SECTION E-E
INTERIOR PEDESTAL

SCALE: 1 TO 10

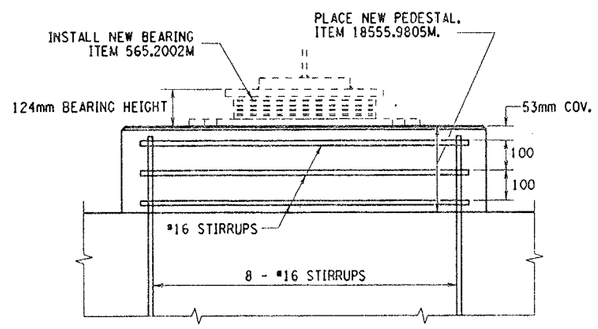

PROPOSED SECTION E-E
INTERIOR PEDESTAL

SCALE: 1 TO 10

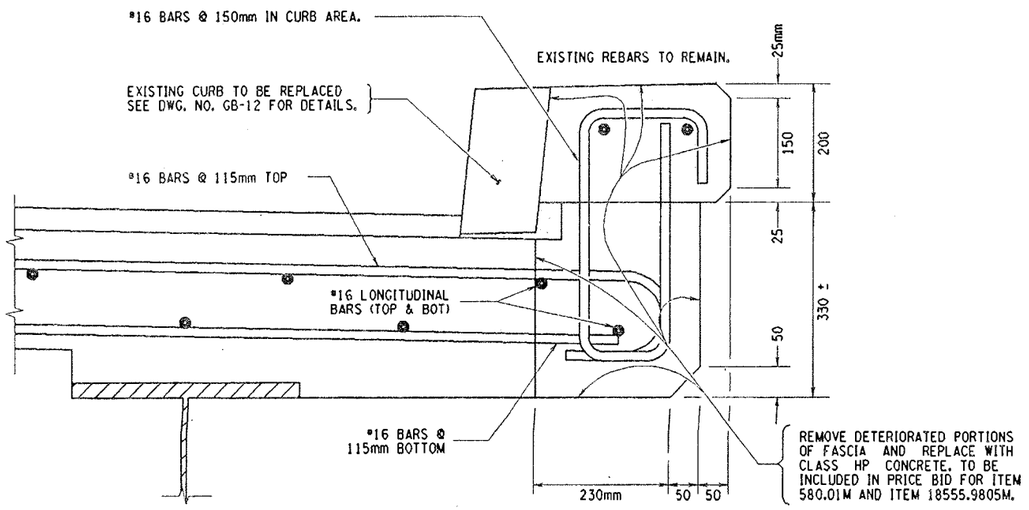

FASCIA REPAIR DETAIL
BIN 1093682

SCALE: 1 TO 5

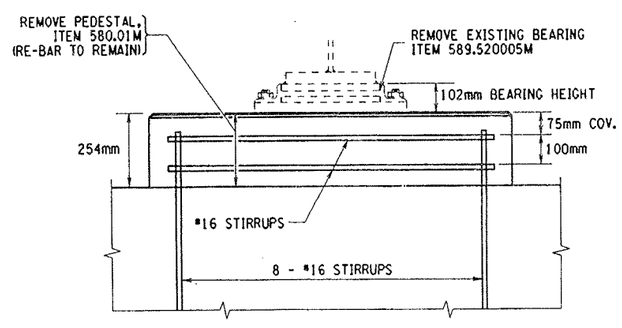

EXISTING SECTION E-E
FASCIA PEDESTAL

SCALE: 1 TO 10

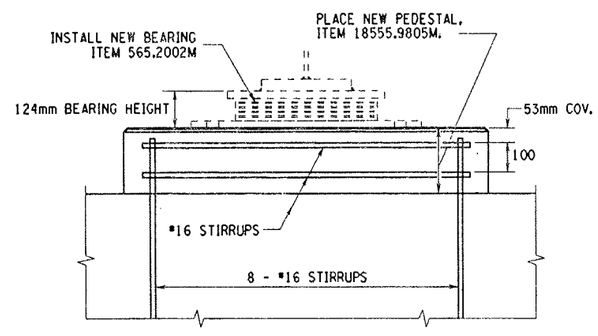

PROPOSED SECTION E-E
FASCIA PEDESTAL

SCALE: 1 TO 10

FASCIA REPAIR NOTES:

1. FASCIA CONCRETE REMOVAL SHALL BE AS SHOWN ON THIS DRAWING OR UNTIL SOUND CONCRETE IS ENCOUNTERED AS DIRECTED BY ENGINEER.
2. EXISTING REINFORCEMENT TO REMAIN.
3. NOTE THAT THE EXISTING BRIDGE RAIL IS BEING UP-GRADED DURING THIS CONTRACT. SEE DWG. NO. GB-10.
4. SAWCUT FASCIA CONCRETE TO PRODUCE NEAT REMOVAL LINES, AS DIRECTED BY ENGINEER. TO BE INCLUDED IN PRICE BID FOR ITEM 18555.9805M.

ALL DIMENSIONS ARE IN mm UNLESS OTHERWISE NOTED

AS BUILT REVISIONS

SIGNATURE | DATE

I-481 OVER I-90

PEDESTAL AND FASCIA REPAIRS DETAILS

STATE OF NEW YORK
DEPARTMENT OF TRANSPORTATION

FILENAME	REGION	DATE	DRAWING NO.
380406GB.C1A	3	12/99	GB-9

CHECKED BY
DRAFTED BY
ESTIMATED BY
CHECKED BY
DESIGNED BY
JOB MANAGER
DESIGN SUPERVISOR

USER = gshubo

FED ROAD REG. NO.	STATE	CONTRACT NO.	SHEET NO.	TOTAL SHEETS
1	N.Y.	D258367	120	354

INTERSTATE BRIDGE DECK OVERLAY PROJECT
VARIOUS BRIDGES ON I-690, I-81 AND I-481
ONONDAGA AND OSWEGO COUNTIES

P.I.N. 3804.06 | B.I.N. 1093681 & 2

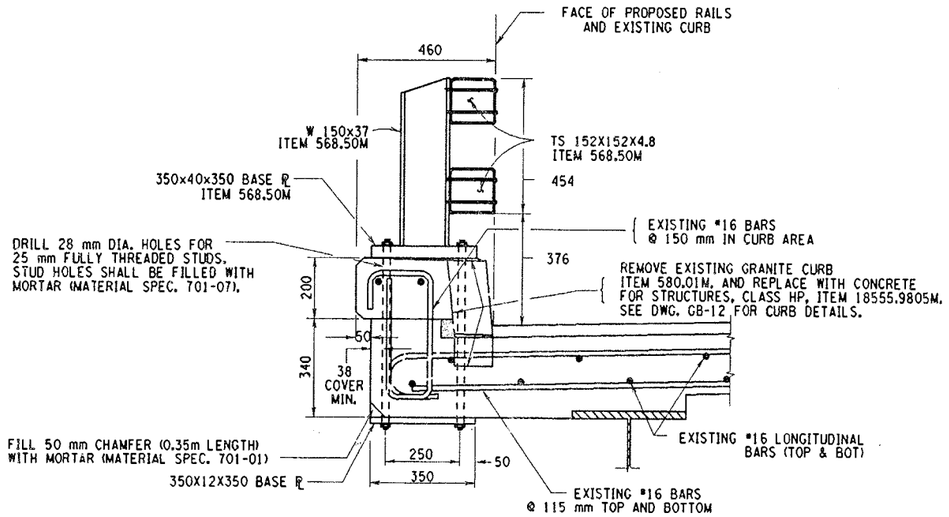

PROPOSED BRIDGE RAIL
SCALE 1:10

EXISTING BRIDGE RAIL TO BE REMOVED
FOR PROPOSED SNOW FENCE DETAILS SEE DWG.- XX

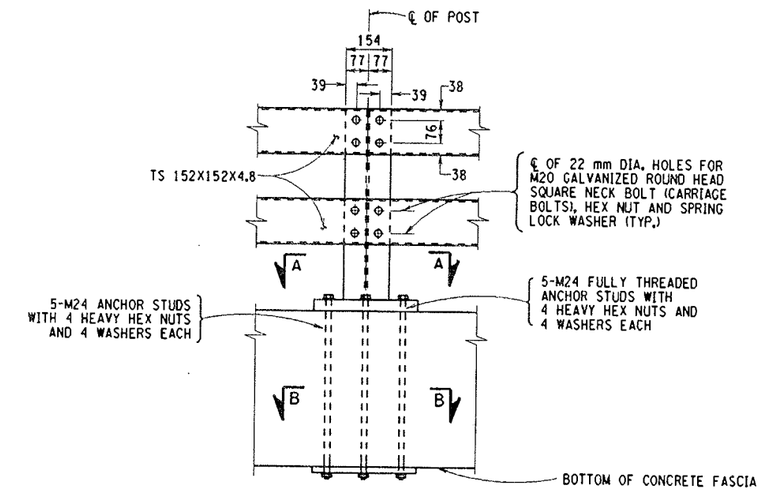

TYPICAL ELEVATION
SCALE 1:10

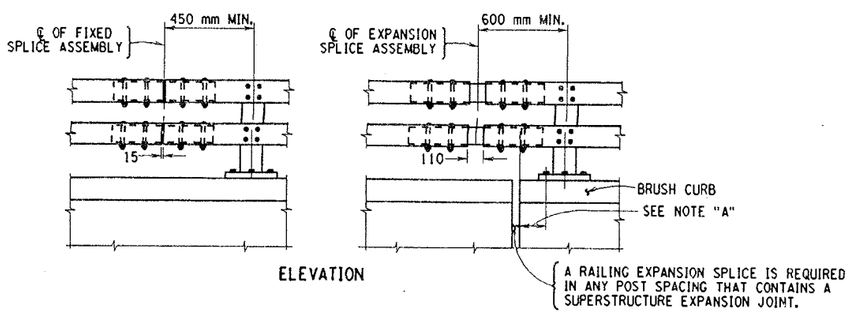

STEEL BRIDGE RAILING SPLICE DETAILS
SCALE 1:20

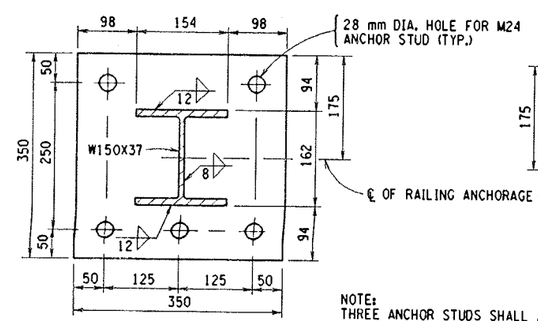

SECTION A-A
SCALE 1:5

NOTE:
THREE ANCHOR STUDS SHALL ALWAYS BE INSTALLED ON TRAFFIC SIDE OF POST.

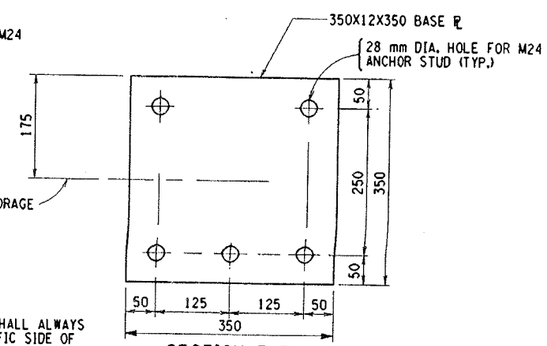

SECTION B-B
SCALE 1:5

NOTE "A":
THE MINIMUM DISTANCE FROM THE POST TO AN EXPANSION JOINT SHALL BE DETERMINED BY THE MINIMUM EDGE DISTANCE OF 125 mm FROM ANY ANCHOR STUD TO THE END OF THE SLAB, OR TO THE RECESS POUR FOR AN EXPANSION JOINT, IF THERE IS ONE.

NOTES:

1. ALL RAILING IS TO BE FABRICATED AND ERECTED ACCORDING TO SECTION 568 OF THE STANDARD SPECIFICATIONS.
2. PRIOR TO GALVANIZING THE ASSEMBLED POST, GRIND ALL EDGES TO A MINIMUM RADIUS OF 2 mm.
3. BOLTS SHALL BE TORQUED SNUG TIGHT (APPROXIMATELY 135 N-m).
4. THESE DETAILS APPLY TO THE BOTH FASCIAS OF BINS 1093681(2).
5. THE EXISTING BRIDGE RAILING WAS INSTALLED UNDER CONTRACT FISH 70-7 AND IS BASED ON BDD 69-51.

ALL DIMENSIONS ARE IN mm UNLESS OTHERWISE NOTED

AS BUILT REVISIONS

SIGNATURE | DATE

I-481 OVER I-90

BRIDGE RAIL DETAILS

STATE OF NEW YORK
DEPARTMENT OF TRANSPORTATION

FILENAME	REGION	DATE	DRAWING NO.
380406GB.R1A	3	12/99	GB-10

DESIGN SUPERVISOR ___ JOB MANAGER ___ DESIGNED BY ___ CHECKED BY ___ ESTIMATED BY ___ DRAFTED BY ___ CHECKED BY ___

FED ROAD REG. NO.	STATE	CONTRACT NO.	SHEET NO.	TOTAL SHEETS
1	N.Y.	D258367	121	354

INTERSTATE BRIDGE DECK OVERLAY PROJECT

VARIOUS BRIDGES ON I-690, I-81 AND I-481

ONONDAGA AND OSWEGO COUNTIES

P.I.N. 3804.06 | B.I.N. 1093681 & 2

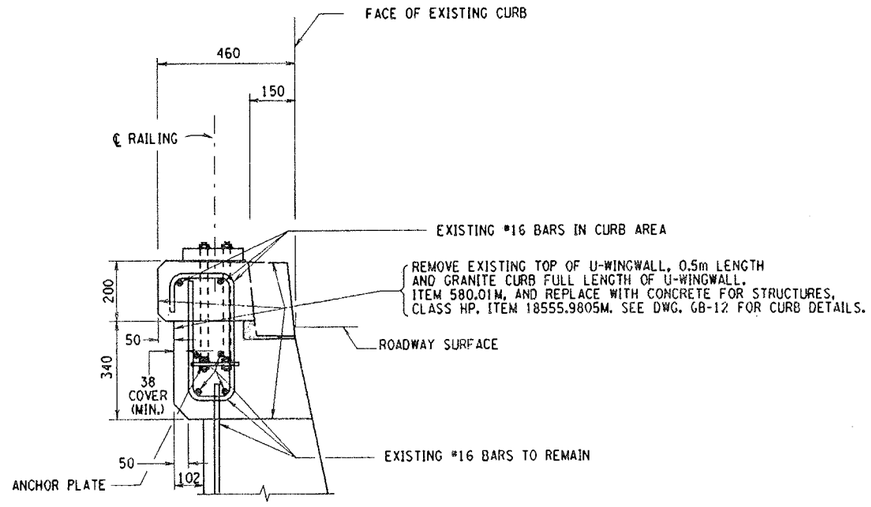

EXISTING BRIDGE RAIL
SCALE 1:10

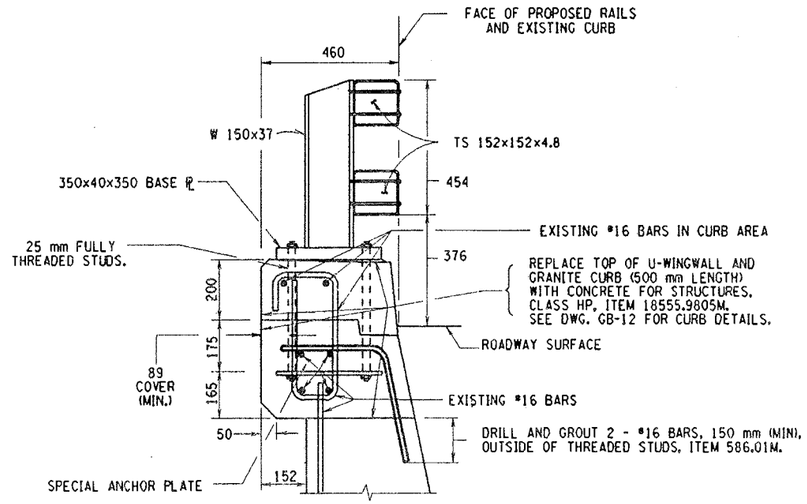

PROPOSED BRIDGE RAIL
SCALE 1:10

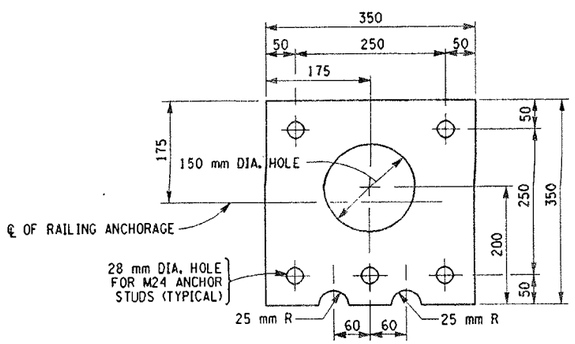

SPECIAL ANCHOR PLATE
FOR U-WINGWALLS
SCALE 1:5

NOTE:
NOTCHES ARE ON TRAFFIC SIDE OF PLATE.

ALL DIMENSIONS ARE IN mm UNLESS OTHERWISE NOTED

AS BUILT REVISIONS

SIGNATURE | DATE

I-481 OVER I-90

U-WINGWALL RAIL DETAILS

STATE OF NEW YORK
DEPARTMENT OF TRANSPORTATION

FILENAME	REGION	DATE	DRAWING NO.
380406GB.R1A	3	12/99	GB-11

DESIGN SUPERVISOR ____ JOB MANAGER ____ DESIGNED BY ____ ESTIMATED BY ____ DRAFTED BY ____ CHECKED BY ____ CHECKED BY ____

USER = gahubo

FED ROAD REG. NO.	STATE	CONTRACT NO.	SHEET NO.	TOTAL SHEETS
1	N.Y.	D258367	122	354

INTERSTATE BRIDGE DECK OVERLAY PROJECT
VARIOUS BRIDGES ON I-690, I-81 AND I-481
ONONDAGA AND OSWEGO COUNTIES

P.I.N. 3804.06 | B.I.N. 1093681 & 2

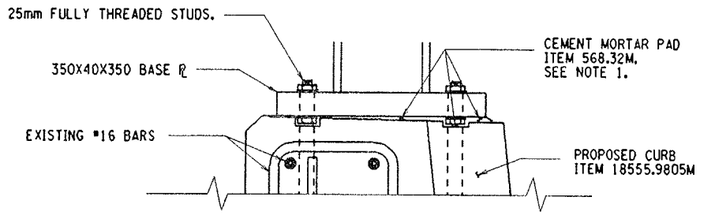

SECTION A-A
NO SCALE

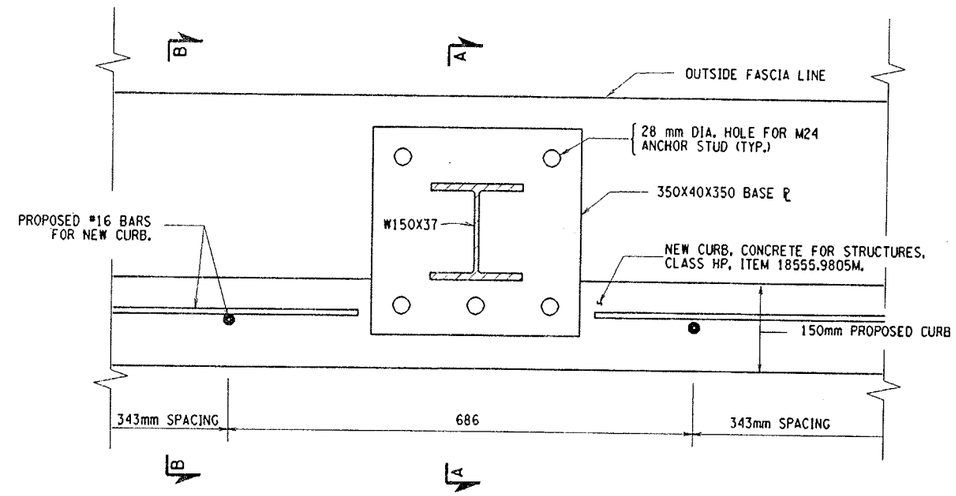

CURB REPAIR DETAIL
NO SCALE

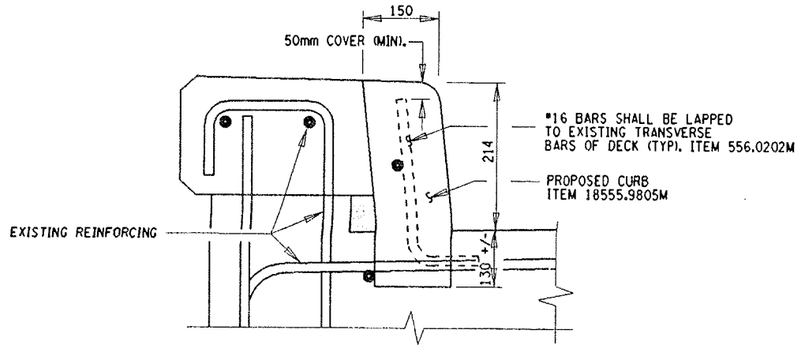

SECTION B-B
NO SCALE

NOTES

1. THE COST FOR REMOVING CONCRETE FOR THE PLACEMENT OF JACKING NUTS SHALL BE INCLUDED IN THE PRICE BID FOR THE RAILING ITEM 568.50M.
2. THE EXISTING GRANITE CURB SHALL BE SALVAGED TO THE NYSDOT BRIDGE MAINTENENCE FORCES. THE NYSDOT BRIDGE MAINTENANCE FORCES WILL PICK UP THE SALVAGED GRANITE CURBING. THE CONTRACTOR SHALL TAKE CARE WHEN REMOVING THE GRANITE CURB TO PRESERVE THE SALVAGE VALUE.

ALL DIMENSIONS ARE IN mm UNLESS OTHERWISE NOTED

AS BUILT REVISIONS

SIGNATURE | DATE

I-481 OVER I-90

CURB REPAIR DETAILS

STATE OF NEW YORK
DEPARTMENT OF TRANSPORTATION

FILENAME	REGION	DATE	DRAWING NO.
380406GB.R1A	3	12/99	GB-12

DESIGN SUPERVISOR ____ JOB MANAGER ____ DESIGNED BY ____ ESTIMATED BY ____ DRAFTED BY ____ CHECKED BY ____ CHECKED BY ____

FED ROAD REG. NO.	STATE	CONTRACT NO.	SHEET NO.	TOTAL SHEETS
1	N.Y.	D258367	123	354

INTERSTATE DECK OVERLAY PROJECT
VARIOUS BRIDGES ON I-690, I-81, AND I-481
ONONDAGA AND OSWEGO COUNTIES

P.I.N. 3804.06 | B.I.N. 1031751 & 2

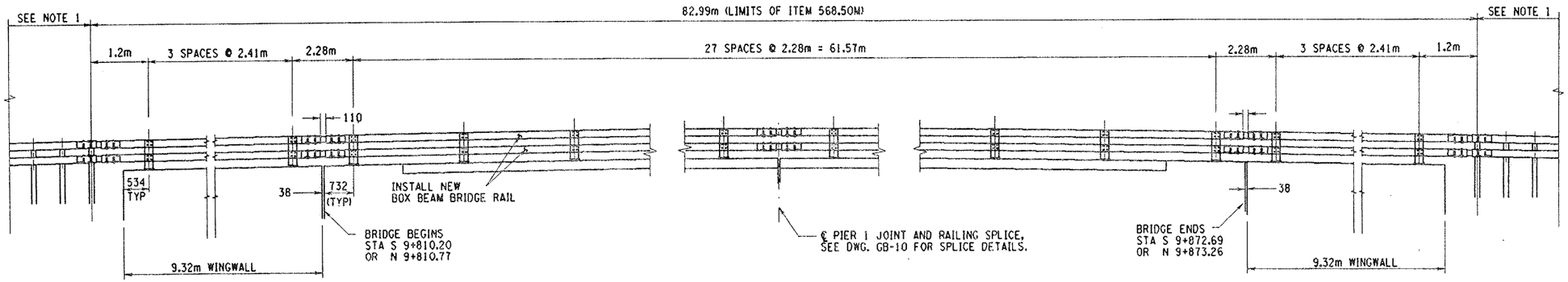

RAIL POST SPACING (TYPICAL)
BIN 1093681 WEST FASCIA ,SHOWN
BIN 1093682 EAST FASCIA, SIMILAR
SCALE 1:50

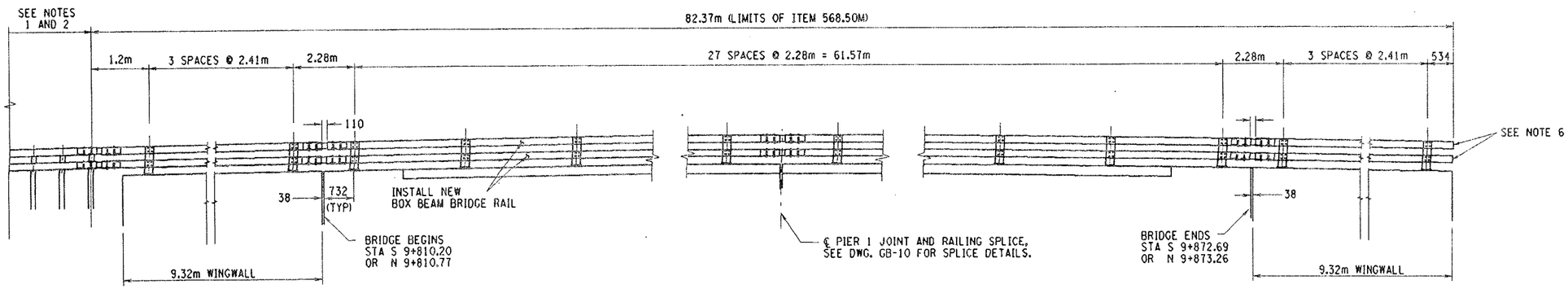

RAIL POST SPACING (TYPICAL)
BIN 1093682 WEST FASCIA ,SHOWN
BIN 1093681 EAST FASCIA, SIMILAR
SCALE 1:50

NOTES:

1. FOR BRIDGE RAIL TRANSITION DETAILS SEE DWG BB-11 AND GB-15.
2. FOR DETAILS ON BOX BEAM GUIDE RAIL AND TYPE III END SECTIONS SEE DWG. GB-16 AND STANDARD SHEETS M606-3&5.
3. FOR BRIDGE RAIL ATTACHMENT DETAILS SEE DWG GB-10.
4. FOR WINGWALL ATTACHMENT DETAILS SEE DWG. GB-11.
5. FOR NEW CURB DETAILS SEE DWG. GB-12.
6. FOR DETAILS OF END CAPS TO BRIDGE RAIL SEE DWG. BB-10.
7. FOR SNOW FENCE DETAILS SEE DWG. GB-17.

ALL DIMENSIONS ARE IN mm UNLESS OTHERWISE NOTED

AS BUILT REVISIONS

SIGNATURE | DATE

I-481 OVER I-90

BRIDGE RAIL DETAILS

STATE OF NEW YORK
DEPARTMENT OF TRANSPORTATION

FILENAME	REGION	DATE	DRAWING NO.
380406GB.R1A	3	12/99	GB-13

DESIGN SUPERVISOR ___ JOB MANAGER ___ DESIGNED BY ___ ESTIMATED BY ___ CHECKED BY ___ DRAFTED BY ___ CHECKED BY ___

USER = gshubo

FED ROAD REG. NO.	STATE	CONTRACT NO.	SHEET NO.	TOTAL SHEETS
1	N.Y.	D258367	124	354

INTERSTATE BRIDGE DECK REPAIR PROJECT

VARIOUS BRIDGES ON I-690, I-81 AND I-481

ONONDAGA AND OSWEGO COUNTIES

P.I.N. 3804.06 | B.I.N. 1093681 & 2

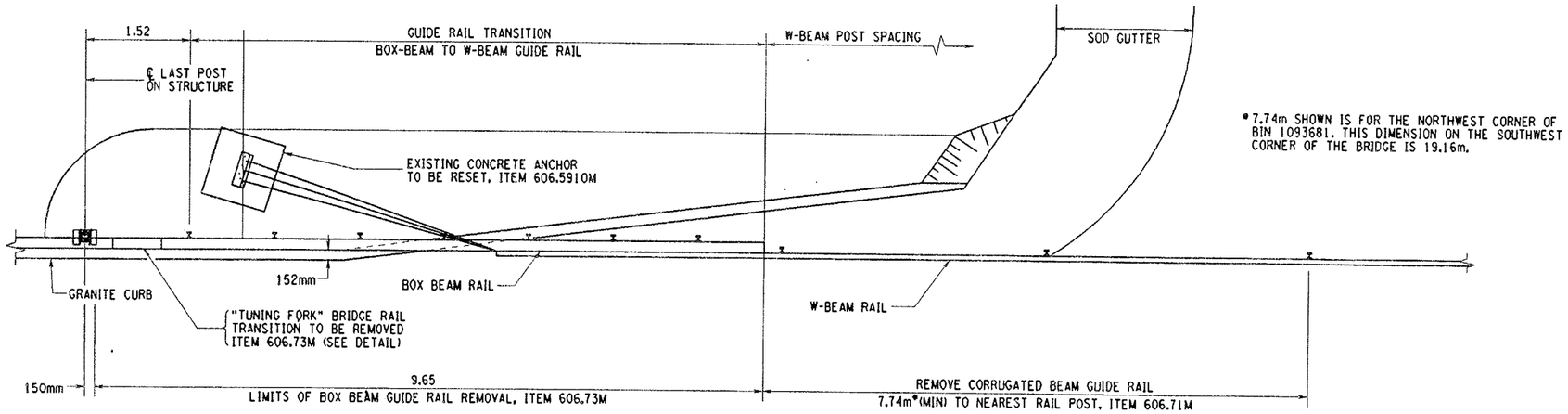

*7.74m SHOWN IS FOR THE NORTHWEST CORNER OF BIN 1093681. THIS DIMENSION ON THE SOUTHWEST CORNER OF THE BRIDGE IS 19.16m.

EXISTING RAIL TRANSITION
BRIDGE RAIL TO HIGHWAY RAIL
BIN 1093681 - NW CORNER SHOWN, SW CORNER OPPOSITE
SCALE 1:40

NOTES:

1. THE LOCATION OF THE FLARED SECTIONS OF THE BRIDGE RAIL TRANSITIONS MAY CONFLICT WITH THE ANCHOR CABLES FOR THE CORRUGATED BEAM TRANSITIONS. IF THIS DOES OCCUR, ONE OR BOTH OF THE ELEMENTS SHALL BE ADJUSTED AS DIRECTED BY THE ENGINEER.
2. REFER TO DWG. BB-11 FOR FURTHER DETAILS OF THE BRIDGE RAIL TRANSITIONS TO BOX BEAM RAIL.
3. REFER TO METRIC STANDARD SHEET M606-15 FOR FURTHER DETAILS OF THE TRANSITION BETWEEN BOX BEAM AND CORRUGATED BEAM RAIL.
4. THE RAIL TRANSITION BETWEEN BOX BEAM AND CORRUGATED BEAM ON THE NORTHWEST CORNER OF BIN 1093681 IS THE "ON-END" DETAIL FOR ONE-WAY TRAFFIC, WHEREAS THE SOUTHWEST CORNER OF THE BRIDGE WILL BE THE "OFF-END" DETAIL. THIS RESULTS IN DIFFERENT TRANSITION LENGTH AT THE TWO CORNERS.
5. TO MEET THE EXISTING RAIL SPLICES, THE BRIDGE RAIL TRANSITIONS ON THE SOUTHEAST AND NORTHEAST CORNERS OF BIN 1093682 ARE LONGER THAN THE STANDARD BRIDGE RAIL TRANSITION BY 0.61m. AN ADDITIONAL 0.61m SPACE SHALL BE PLACED IN THE TRANSITIONS.

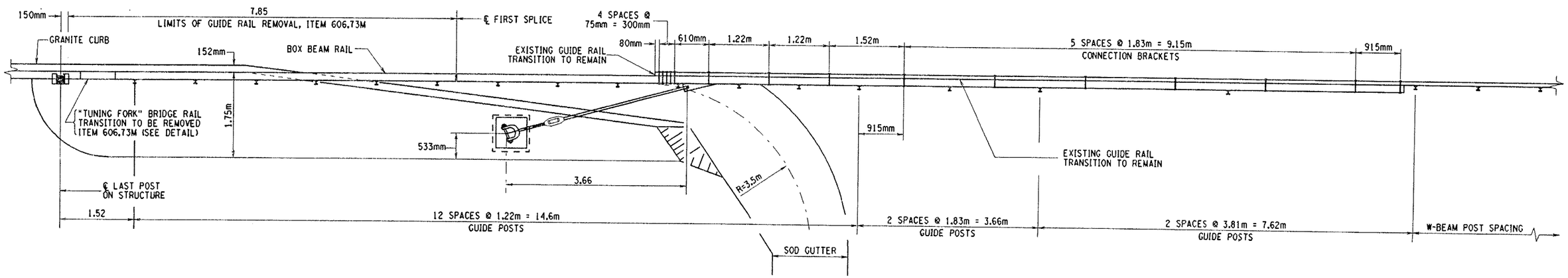

EXISTING RAIL TRANSITION
BRIDGE RAIL TO HIGHWAY RAIL
BIN 1093682 - NE CORNER SHOWN, SE CORNER OPPOSITE
SCALE 1:40

ALL DIMENSIONS ARE IN m UNLESS OTHERWISE NOTED

AS BUILT REVISIONS

SIGNATURE | DATE

I-481 OVER I-90

EXISTING RAIL TRANSITION DETAILS
OUTSIDE CORNERS

STATE OF NEW YORK
DEPARTMENT OF TRANSPORTATION

FILENAME	REGION	DATE	DRAWING NO.
380406GB.R1A	3	12/99	GB-14

CHECKED BY
DRAFTED BY
ESTIMATED BY
CHECKED BY
DESIGNED BY
JOB MANAGER
DESIGN SUPERVISOR

FED ROAD REG. NO.	STATE	CONTRACT NO.	SHEET NO.	TOTAL SHEETS
1	N.Y.	D258367	125	354

INTERSTATE BRIDGE DECK REPAIR PROJECT
VARIOUS BRIDGES ON I-690, I-81 AND I-481
ONONDAGA AND OSWEGO COUNTIES

P.I.N. 3804.06 | B.I.N. 1093681 & 2

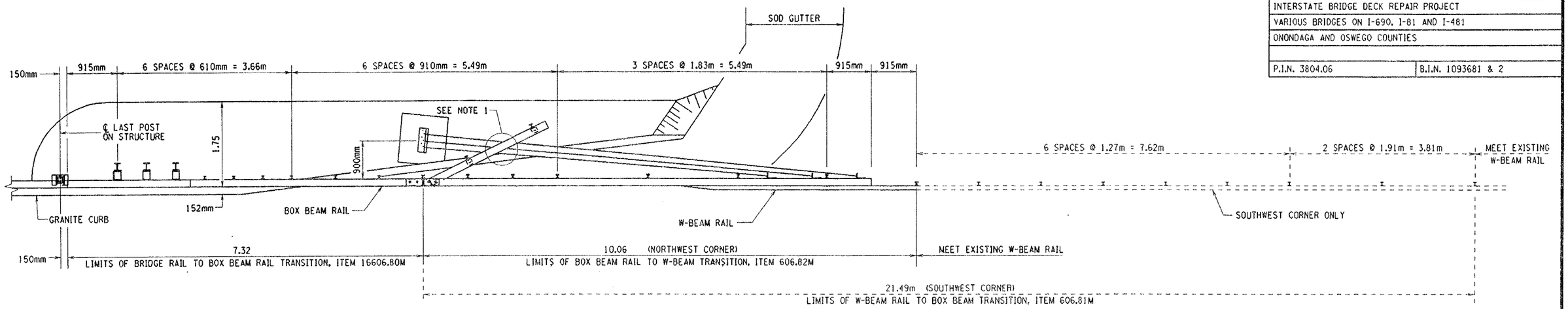

PROPOSED RAIL TRANSITION
BRIDGE RAIL TO HIGHWAY RAIL
BIN 1093681 - NW CORNER SHOWN, SW CORNER OPPOSITE
SCALE 1:40

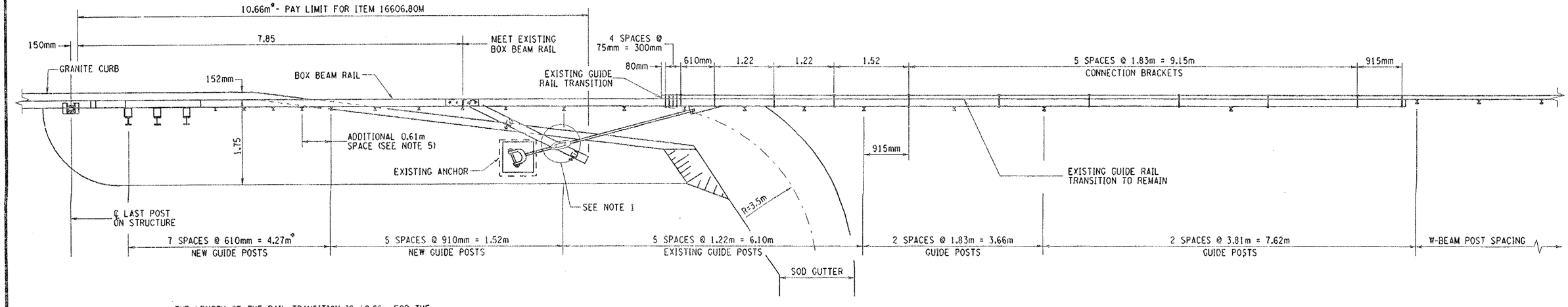

* THE LENGTH OF THE RAIL TRANSITION IS 10.66m FOR THE NORTHEAST AND SOUTHEAST CORNERS OF BIN 1093682. THIS DIMENSION IS LONGER BY ONE 0.61m POST SPACE THAN THE STANDARD TRANSITION LENGTH. THIS IS TO MEET THE EXISTING SPLICE WITH THE HIGHWAY BOX BEAM.

PROPOSED RAIL TRANSITION
BRIDGE RAIL TO HIGHWAY RAIL
BIN 1093682 - NE AND SE CORNERS
SCALE 1:40

NOTES:

1. THE LOCATION OF THE FLARED SECTIONS OF THE BRIDGE RAIL TRANSITIONS MAY CONFLICT WITH THE ANCHOR CABLES FOR THE CORRUGATED BEAM TRANSITIONS. IF THIS DOES OCCUR, ONE OR BOTH OF THE ELEMENTS SHALL BE ADJUSTED AS DIRECTED BY THE ENGINEER.
2. REFER TO DWG. BB-11 FOR FURTHER DETAILS OF THE BRIDGE RAIL TRANSITIONS TO BOX BEAM RAIL.
3. REFER TO METRIC STANDARD SHEET M606-15 FOR FURTHER DETAILS OF THE TRANSITION BETWEEN BOX BEAM AND CORRUGATED BEAM RAIL.
4. THE RAIL TRANSITION BETWEEN BOX BEAM AND CORRUGATED BEAM ON THE NORTHWEST CORNER OF BIN 1093681 IS THE "ON-END" DETAIL FOR ONE-WAY TRAFFIC, WHEREAS THE SOUTHWEST CORNER OF THE BRIDGE WILL BE THE "OFF-END" DETAIL. THIS RESULTS IN DIFFERENT TRANSITION LENGTH AT THE TWO CORNERS.
5. TO MEET THE EXISTING RAIL SPLICES, THE BRIDGE RAIL TRANSITIONS ON THE SOUTHEAST AND NORTHEAST CORNERS OF BIN 1093682 ARE LONGER THAN THE STANDARD BRIDGE RAIL TRANSITION BY 0.61m. AN ADDITIONAL 0.61m SPACE SHALL BE PLACED IN THE TRANSITIONS.

ALL DIMENSIONS ARE IN m UNLESS OTHERWISE NOTED

AS BUILT REVISIONS

SIGNATURE | DATE

I-481 OVER I-90

PROPOSED RAIL TRANSITION DETAILS
OUTSIDE CORNERS

STATE OF NEW YORK
DEPARTMENT OF TRANSPORTATION

FILENAME	REGION	DATE	DRAWING NO.
380406GB.R1A	3	12/99	GB-15

CHECKED BY
DRAFTED BY
ESTIMATED BY
CHECKED BY
DESIGNED BY
JOB MANAGER
DESIGN SUPERVISOR
USER = gshubo

FED ROAD REG. NO.	STATE	CONTRACT NO.	SHEET NO.	TOTAL SHEETS
1	N.Y.	D258367	126	354

INTERSTATE BRIDGE DECK REPAIR PROJECT
VARIOUS BRIDGES ON I-690, I-81 AND I-481
ONONDAGA AND OSWEGO COUNTIES

P.I.N. 3804.06 | B.I.N. 1093681 & 2

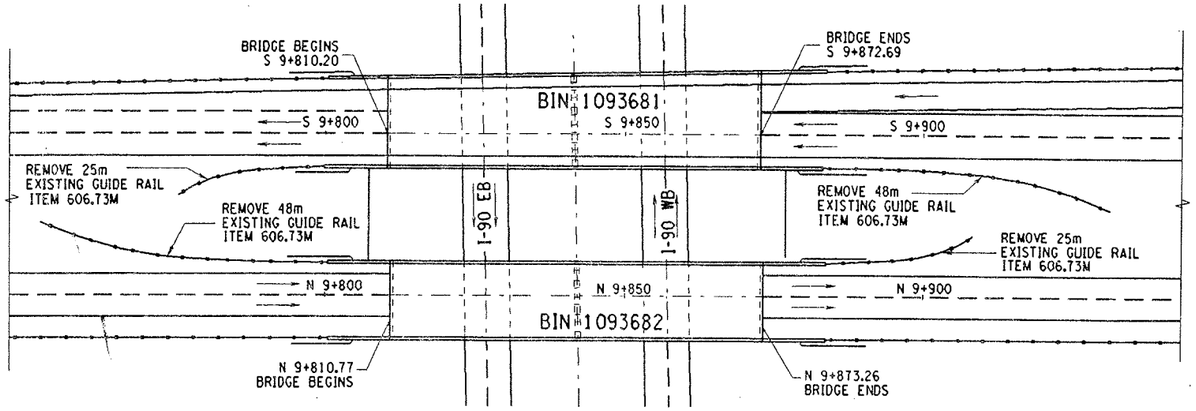

EXISTING PLAN VIEW

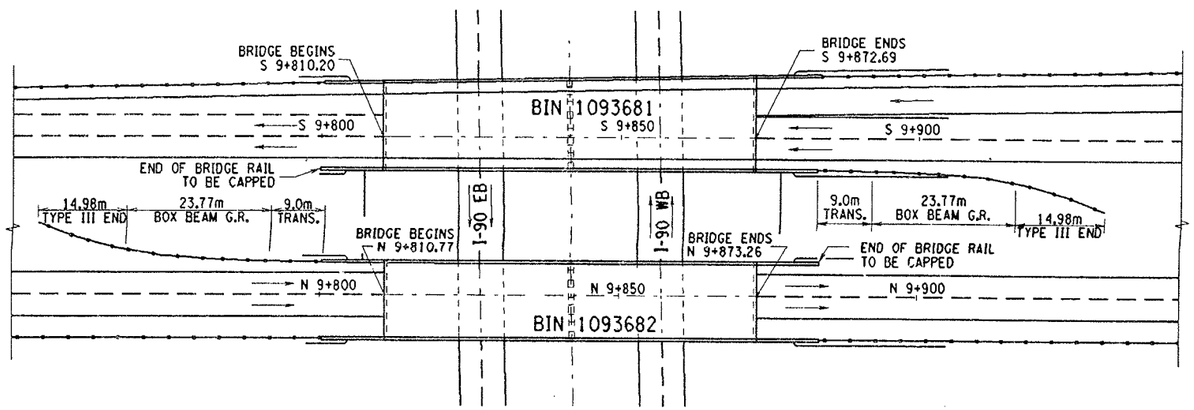

PROPOSED PLAN VIEW

NOTES:

1. FOR DETAILS OF END CAPS FOR BRIDGE RAIL SEE DWG. BB-10.
2. FOR DETAILS ON BRIDGE RAIL TRANSITIONS SEE DWG. BB-11.
3. FOR DETAILS ON TANGENT SECTIONS OF BOX BEAM GUIDE RAIL REFER TO STANDARD SHEET M606-3.
4. FOR DETAILS ON TYPE III END SECTIONS FOR BOX BEAM GUIDE RAIL REFER TO STANDARD SHEET M606-5.
5. FOR DETAILS OF GUIDE RAIL AT OUTSIDE CORNERS SEE DWG. GB-15.

ALL DIMENSIONS ARE IN m UNLESS OTHERWISE NOTED

AS BUILT REVISIONS

SIGNATURE | DATE

I-481 OVER I-90

PROPOSED RAIL TRANSITION DETAILS
INSIDE CORNERS

STATE OF NEW YORK
DEPARTMENT OF TRANSPORTATION

FILENAME	REGION	DATE	DRAWING NO.
380406GB.R1A	3	12/99	GB-16

CHECKED BY
DRAFTED BY
ESTIMATED BY
CHECKED BY
DESIGNED BY
JOB MANAGER
DESIGN SUPERVISOR

FED ROAD REG. NO.	STATE	CONTRACT NO.	SHEET NO.	TOTAL SHEETS
1	N.Y.	D258367	127	354

INTERSTATE BRIDGE DECK OVERLAY PROJECT

VARIOUS BRIDGES ON I-690, I-81 AND I-481

ONONDAGA NAD OSWEGO COUNTIES

P.I.N. 3804.06 | B.I.N. 1093681 & 2

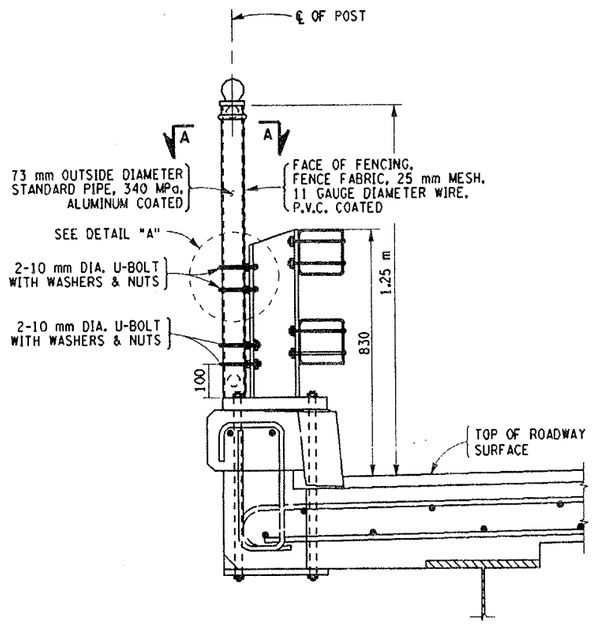

TYPICAL SECTION

SNOW FENCE POST ATTACHMENT TO TWO RAIL RAILING

SCALE 1:10

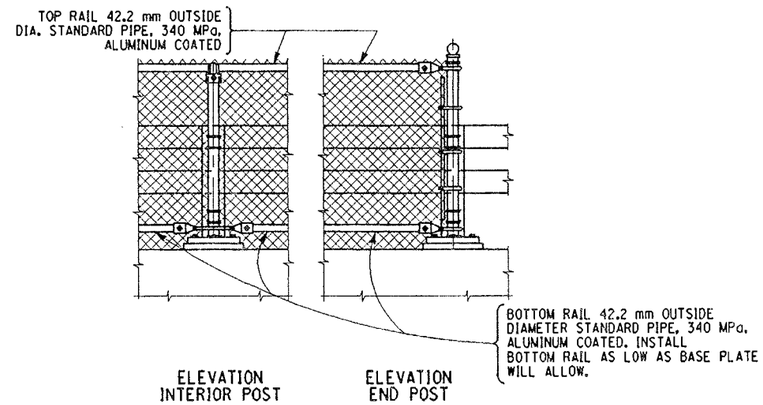

SNOW FENCE POST ATTACHMENT TO TWO RAIL RAILING

SCALE 1:20

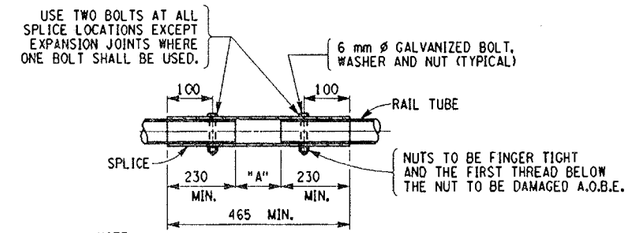

NOTE:
"A" = 5 mm EXCEPT FOR EXPANSION JOINT LOCATIONS WHERE THIS DIMENSION SHALL BE SET EQUAL TO THE BRIDGE DECK JOINT OPENING PLUS 5 mm (MIN.)

TYPICAL RAIL SPLICE DETAIL (TOP & BOTTOM RAIL)

NOT TO SCALE

NOTES:

1. THE CONTRACTOR SHALL VERIFY THE SPACING AND DIMENSIONS OF ALL BRIDGE RAIL TYPES PRIOR TO BIDDING THE CONTRACT AND ORDERING THE MATERIALS.
2. THE 127 x 127 x 12.7 AND 152 x 152 x 12.7 STRUCTURAL STEEL ANGLES SHALL BE A36 GALVANIZED STEEL, ALL OTHER HARDWARE SHALL BE GALVANIZED STEEL.
3. ALL GALVANIZED STEEL COMPONENTS SHALL CONFORM TO THE REQUIREMENTS OF THE N.Y.S.D.O.T. SPECIFICATIONS SECTION 607 - FENCES AND SECTION 719-01 - GALVANIZED COATINGS AND REPAIR METHODS.
4. THE COST OF FURNISHING ALL MATERIALS, LABOR, EQUIPMENT, FIELD DRILLING OF HOLES AND REPAIRS TO ALL GALVANIZED COATINGS TO BE INCLUDED IN THE PRICE BID FOR ITEM 16607.0641M.
5. A FENCE RAIL EXPANSION SPLICE IS REQUIRED IN THE TOP AND BOTTOM FENCE RAILS BETWEEN BRIDGE RAIL POSTS WHEN A BRIDGE RAIL EXPANSION SPLICE EXISTS BETWEEN THOSE BRIDGE RAIL POSTS.

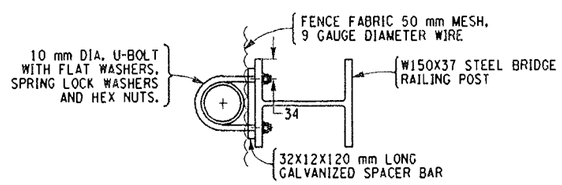

SECTION A-A

SCALE 1:5

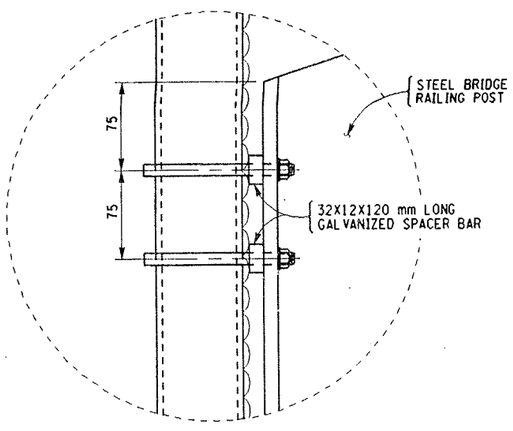

DETAIL "A"

NOT TO SCALE

TABLE OF SNOW FENCING

ITEM 16607.0641M, SNOW FENCING FOR BRIDGES

LOCATION	BIN	SIDE	METER
I-690 / I-90 (THRUWAY)	1093681	BOTH	45.6m (EACH)
I-690 / I-90 (THRUWAY)	1093682	BOTH	45.6m (EACH)
		TOTAL	182.4m

NOTE:
THE SNOW FENCE SHALL EXTEND 6.0 METERS BEYOND THE LEADING EDGE OF THE SHOULDER OF THE ROADWAY BELOW.

ALL DIMENSIONS ARE IN mm UNLESS OTHERWISE NOTED

AS BUILT REVISIONS

SIGNATURE | DATE

I-481 OVER I-90

SNOW FENCE DETAILS

STATE OF NEW YORK
DEPARTMENT OF TRANSPORTATION

FILENAME	REGION	DATE	DRAWING NO.
380406GB.R1A	3	12/99	GB-17

CHECKED BY
DRAFTED BY
ESTIMATED BY
CHECKED BY
DESIGNED BY
JOB MANAGER
DESIGN SUPERVISOR

USER = gshuck

FED ROAD REG. NO.	STATE	CONTRACT NO.	SHEET NO.	TOTAL SHEETS
1	N.Y.	D258367	128	354

INTERSTATE BRIDGE DECK OVERLAY PROJECT
VARIOUS BRIDGES ON I-690, I-81 AND I-481
ONONDAGA AND OSWEGO COUNTIES

P.I.N. 3804.06 | B.I.N. ALL BINS

BRIDGE JOINT TABLE

B.I.N. NUMBER	JOINT LOCATION	JOINT SKEW	SPAN(S) LENGTH FOR JOINT	JOINT BEND LOCAT'N		EXIST. JOINT TYPE	PROPOSED JOINT TYPE	CURB TO CURB DISTANCE (SEE NOTES)	FASCIA/ MEDIAN LENGTH	TOTAL LENGTH	ITEM NUMBER	DRAWING NUMBER		
				LT	RT							PLAN VIEW	SECT VIEW	FASCIA DETAIL
BIN 1026099	E. ABUT	40°-47'-23"	———	PAV'T	N	ACF	A-1 MAC	16.18m	0.48m	16.66m	567.31M	AB-3	AB-4	AB-5
(EASTBOUND)	PIER 1	40°-47'-23"	43.40m	PAV'T	N	ACX	A-6 MAC	16.38m	0.48m	16.86m	567.36M	AB-3	AB-4	AB-5
	PIER 2	40°-47'-23"	23.65m	PAV'T	N	ACX	A-4 MAC	16.38m	0.48m	16.86m	567.34M	AB-3	AB-4	AB-5
	PIER 3	40°-47'-23"	16.93m	PAV'T	N	ACX	A-2 MAC	16.38m	0.48m	16.86m	567.32M	AB-3	AB-4	AB-5
	W. ABUT	40°-47'-23"	———	PAV'T	N	ACF	A-1 MAC	17.12m	0.48m	17.60m	567.31M	AB-3	AB-4	AB-5
BIN 1031751	S. ABUT	0°-00'-00"	———	N	N	CS	CS	• 0.92mm	1.70m	2.62m	16567.64M	BB-5	BB-6	BB-7
	N. ABUT	0°-00'-00"	28.80m	N	N	CS	CS	14.94m	1.64m	16.58m	16567.64M	BB-5	BB-6A	BB-7
	LONGITUDINAL	———	———	——	——	CS	CS	•• 4 @ 0.90m	——	3.60m	16567.64M	BB-5	BB-7	——
BIN 1031752	S. ABUT	0°-00'-00"	———	N	N	CS	CS	• 0.92m	1.70m	2.62m	16567.64M	BB-5	BB-6	BB-7
	N. ABUT	0°-00'-00"	28.80m	N	N	CS	CS	17.07m	1.64m	18.71m	16567.64M	BB-5	BB-6A	BB-7
	LONGITUDINAL	———	———	——	——	CS	CS	•• 4 @ 0.90m	——	3.60m	16567.64M	BB-5	BB-7	——
BIN 1031771	S. ABUT	5°-17'-29"	———	N	N	CS	CS	15.00m	1.64m	16.64m	16567.64M	DB-4	DB-5	DB-7
	PIER 1	5°-17'-29"	27.40m	CRB	CRB	ACX	A-4 MAC	15.00m	1.64m	16.64m	567.34M	DB-8	DB-9	DB-8
	PIER 2	5°-17'-29"	13.51m	CRB	CRB	ACX	A-2 MAC	15.00m	1.64m	16.64m	567.32M	DB-8	DB-9	DB-8
	N. ABUT	5°-17'-29"	———	N	N	ACF	A-1 MAC	15.00m	1.64m	16.64m	567.31M	DB-4	DB-6	DB-7
	LONGITUDINAL	———	———	——	——	CS	CS	•• 4 @ 0.90m	——	3.60m	16567.64M	DB-4	DB-7	——
BIN 1031772	S. ABUT	5°-17'-29"	———	N	N	CS	CS	15.00m	1.64m	16.64m	16567.64M	DB-4	DB-5	DB-7
	PIER 1	5°-17'-29"	27.40m	CRB	CRB	ACX	A-4 MAC	15.00m	1.64m	16.64m	567.34M	DB-8	DB-9	DB-8
	PIER 2	5°-17'-29"	13.51m	CRB	CRB	ACX	A-2 MAC	15.00m	1.64m	16.64m	567.32M	DB-8	DB-9	DB-8
	N. ABUT	5°-17'-29"	———	N	N	ACF	A-1 MAC	15.00m	1.64m	16.64m	567.31M	DB-4	DB-6	DB-7
	LONGITUDUNAL	———	———	——	——	CS	CS	•• 4 @ 0.90m	——	3.60m	16567.64M	DB-4	DB-7	——
BIN 1051139	W. ABUT	9°-22'-04"	———	PAR	——	CS	A-1 MAC	13.05m	0.59m	13.64m	567.31M	EB-6	EB-8	EB-9
(WESTBOUND)	PIER 1	10°-22'-18"	18.97m	PAR	——	CS	A-3 MAC	13.10m	0.59m	13.69m	567.33M	EB-7	EB-8	EB-9
	PIER 2	12°-39'-26"	32.32m	PAR	——	CS	A-5 MAC	13.20m	0.59m	13.79m	567.35M	EB-7	EB-8	EB-9
	PIER 3	14°-58'-52"	32.32m	PAR	——	CS	A-5 MAC	13.33m	0.59m	13.92m	567.35M	EB-7	EB-8	EB-9
	PIER 4	17°-13'-52"	32.33m	PAR	——	CS	A-5 MAC	13.49m	0.59m	14.08m	567.35M	EB-7	EB-8	EB-9
	PIER 5	4°-23'-52"	26.21m	PAR	——	CS	A-5 MAC	12.92m	0.59m	13.51m	567.35M	EB-7	EB-8	EB-9
	PIER 6	2°-12'-07"	32.32m	PAR	——	CS	A-5 MAC	14.72m	0.59m	15.31m	567.35M	EB-7	EB-8	EB-9
	PIER 7	0°-00'-00"	32.30m	N	——	CS	A-5 MAC	15.93m	0.59m	16.52m	567.35M	EB-7	EB-8	EB-9
	PIER 8	0°-00'-00"	32.31m	N	——	CS	A-5 MAC	15.93m	0.59m	16.52m	567.35M	EB-7	EB-8	EB-9
	PIER 9	0°-00'-00"	32.31m	N	——	CS	A-5 MAC	15.93m	0.59m	16.52m	567.35M	EB-7	EB-8	EB-9
	PIER 10	0°-00'-00"	32.31m	N	——	CS	A-5 MAC	15.93m	0.59m	16.52m	567.35M	EB-7	EB-8	EB-9
	PIER 11	0°-00'-00"	32.31m	N	——	CS	A-5 MAC	15.93m	0.59m	16.52m	567.35M	EB-7	EB-8	EB-9
	PIER 12	0°-00'-00"	32.31m	N	——	CS	A-5 MAC	15.93m	0.59m	16.52m	567.35M	EB-7	EB-8	EB-9
	PIER 13	0°-00'-00"	32.31m	N	——	CS	A-5 MAC	15.93m	0.59m	16.52m	567.35M	EB-7	EB-8	EB-9
	PIER 14	0°-00'-00"	32.31m	N	——	CS	A-5 MAC	16.39m	0.59m	16.98m	567.35M	EB-7	EB-8	EB-9
	E. ABUT	0°-00'-00"	31.07m	CRB	——	CS	A-5 MAC	19.58m	0.59m	20.17m	567.35M	EB-6	EB-8	EB-9
	LONGITUDINAL	———	———	——	——	CS	CS	•• 486.81m	——	486.81m	16567.64M	EB-6,7	EB-9	——

LEGEND

EXISTING JOINT TYPE

ACF = ARMORED COMPRESSION-FIXED
ACX = ARMORED COMPRESSSION-EXPANSION
MOD1 = ONE-CELL MODULAR
CS = COMPRESSION SEAL JOINT

PROPOSED JOINT TYPE

A-'X' MAC = MODIFIED ARMORED COMP. SEAL-TYPE 1

MOD-1 = ONE CELL MODULAR JT.

CS = COMPRESSION SEAL

ITEM 16567.64M - REPLACE COMP. SEAL IN EXISTING BRIDGE JOINT.

JOINT BEND LOCATION

N = NO BENDS
CRB = CURB LINE
PAR = PARAPET
PAV'T = PAVEMENT

NOTES:

1. ALL MEASUREMENTS SHALL BE VERIFIED IN THE FIELD BY THE CONTRACTOR.
2. CURB TO CURB LENGTHS ARE MEASURED ALONG THE ℄ OF THE JOINT.
3. ALL DIMENSIONS AND SIDE REFERENCES ARE SHOWN LOOKING UP-STATION.
4. FOR GENERAL JOINT NOTES AND DETAILS, REFER TO THE JOINT DETAILS ON DWG. JT-1.
5. ALL DIMENSIONS ARE SHOWN IN METERS.

• THESE COMPRESSION SEALS EXTEND ONLY AS FAR AS THE COVER WALL.

•• THESE DIMENSIONS ARE ALONG THE CURB OR MEDIAN FACE.

ALL DIMENSIONS ARE IN m UNLESS OTHERWISE NOTED

AS BUILT REVISIONS

SIGNATURE | DATE

BRIDGE JOINT TABLE
SHEET 1 OF 2

STATE OF NEW YORK
DEPARTMENT OF TRANSPORTATION

FILENAME	REGION	DATE	DRAWING NO.
380406JB.L1A	3	12/99	JT-1

CHECKED BY ____ DRAFTED BY ____ ESTIMATED BY ____ CHECKED BY ____ DESIGNED BY ____ JOB MANAGER ____ DESIGN SUPERVISOR ____

FED ROAD REG. NO.	STATE	CONTRACT NO.	SHEET NO.	TOTAL SHEETS
1	N.Y.	D258367	129	354

INTERSTATE BRIDGE DECK OVERLAY PROJECT
VARIOUS BRIDGES ON I-690, I-81 AND I-481
ONONDAGA AND OSWEGO COUNTIES

P.I.N. 3804.06 | B.I.N. ALL BINS

BRIDGE JOINT TABLE

B.I.N. NUMBER	JOINT LOCATION	JOINT SKEW	SPAN(S) LENGTH FOR JOINT	JOINT BEND LOCAT'N LT	JOINT BEND LOCAT'N RT	EXIST. JOINT TYPE	PROPOSED JOINT TYPE	CURB TO CURB DISTANCE (SEE NOTES)	FASCIA/ MEDIAN LENGTH	TOTAL LENGTH	ITEM NUMBER	DRAWING NUMBER PLAN VIEW	DRAWING NUMBER SECT VIEW	DRAWING NUMBER FASCIA DETAIL
BIN 1051149	W. ABUT	17°-04'-55"	———	CRB	CRB	ACF	A-1 MAC	15.63m	.56m	16.19m	567.31M	FB-3	FB-3	FB-4
(WESTBOUND)	E. ABUT	17°-04'-55"	23.62m	CRB	CRB	ACX	A-4 MAC	15.63m	.56m	16.19m	567.34M	FB-3	FB-3	FB-4
	LONGITUDINAL	———	———	——	——	CS	CS	•• 25.51m	——	25.51m	16567.64M	FB-3	FB-4	——
BIN 1093681	S. ABUT	0°-00'-00"	30.63m	N	N	ACX	A-5 MAC	14.48m	.92m	15.40m	567.35M	GB-4	GB-5	GB-6
	PIER 1	0°-00'-00"	———	N	N	ACF	A-1 MAC	15.02m	.92m	15.94m	567.31M	GB-3	GB-5	GB-6
	N. ABUT	0°-00'-00"	30.63m	N	N	ACX	A-5 MAC	15.55m	.92m	16.47m	567.35M	GB-4	GB-5	GB-6
BIN 1093682	S. ABUT	0°-00'-00"	30.63m	N	N	ACX	A-5 MAC	12.50m	.92m	13.42m	567.35M	GB-4	GB-5	GB-6
	PIER 1	0°-00'-00"	———	N	N	ACF	A-1 MAC	12.50m	.92m	13.42m	567.31M	GB-3	GB-5	GB-6
	N. ABUT	0°-00'-00"	30.63m	N	N	ACX	A-5 MAC	12.50m	.92m	13.42m	567.35M	GB-4	GB-5	GB-6
BIN 4031761	S. ABUT	0°-00'-00"	23.95m	N	N	ACX	A-3 MAC	12.20m	1.52m	13.72m	567.33M	CB-4	CB-5	CB-5
	N. ABUT	0°-00'-00"	121.49m	N	N	MOD1	MOD-1	12.20m	1.52m	13.72m	566.01M	CB-4	CB-6	CB-5
BIN 4031762	S. ABUT	0°-00'-00"	23.95m	N	N	ACX	A-3 MAC	12.20m	1.52m	13.72m	567.33M	CB-4	CB-5	CB-5
	N. ABUT	0°-00'-00"	121.49m	N	N	MOD1	MOD-1	12.20m	1.52m	13.72m	566.01M	CB-4	CB-6	CB-5

LEGEND

EXISTING JOINT TYPE

ACF = ARMORED COMPRESSION-FIXED
ACX = ARMORED COMPRESSSION-EXPANSION
MOD1 = ONE-CELL MODULAR
CS = COMPRESSION SEAL JOINT

PROPOSED JOINT TYPE

A-'X' MAC = MODIFIED ARMORED COMP. SEAL-TYPE 1

MOD-1 = ONE CELL MODULAR JT.

CS = COMPRESSION SEAL

ITEM 16567.64M - REPLACE COMP. SEAL IN EXISTING BRIDGE JOINT.

JOINT BEND LOCATION

N = NO BENDS
CRB = CURB LINE
PAR = PARAPET
PAV'T = PAVEMENT

NOTES:

1. ALL MEASUREMENTS SHALL BE VERIFIED IN THE FIELD BY THE CONTRACTOR.
2. CURB TO CURB LENGTHS ARE MEASURED ALONG THE ℄ OF THE JOINT.
3. ALL DIMENSIONS AND SIDE REFERENCES ARE SHOWN LOOKING UP-STATION.
4. FOR GENERAL JOINT NOTES AND DETAILS, REFER TO THE JOINT DETAILS ON DWG. JT-1.
5. ALL DIMENSIONS ARE SHOWN IN METERS.

• THESE COMPRESSION SEALS EXTEND ONLY AS FAR AS THE COVER WALL.

•• THESE DIMENSIONS ARE ALONG THE CURB OR MEDIAN FACE.

ALL DIMENSIONS ARE IN m UNLESS OTHERWISE NOTED

AS BUILT REVISIONS

SIGNATURE | DATE

BRIDGE JOINT TABLE
SHEET 2 OF 2

STATE OF NEW YORK
DEPARTMENT OF TRANSPORTATION

FILENAME	REGION	DATE	DRAWING NO.
380406JB.L1A	3	12/99	JT-2

CHECKED BY ____ DRAFTED BY ____ ESTIMATED BY ____ CHECKED BY ____ DESIGNED BY ____ JOB MANAGER ____ DESIGN SUPERVISOR ____

USER = gshubo

FED ROAD REG. NO.	STATE	CONTRACT NO.	SHEET NO.	TOTAL SHEETS
1	N.Y.	D258367	130	354

INTERSTATE BRIDGE DECK OVERLAY PROJECT
VARIOUS BRIDGES ON I-690, I-81 AND I-481
ONONDAGA AND OSWEGO COUNTIES

P.I.N. 3804.06 | B.I.N. VARIOUS

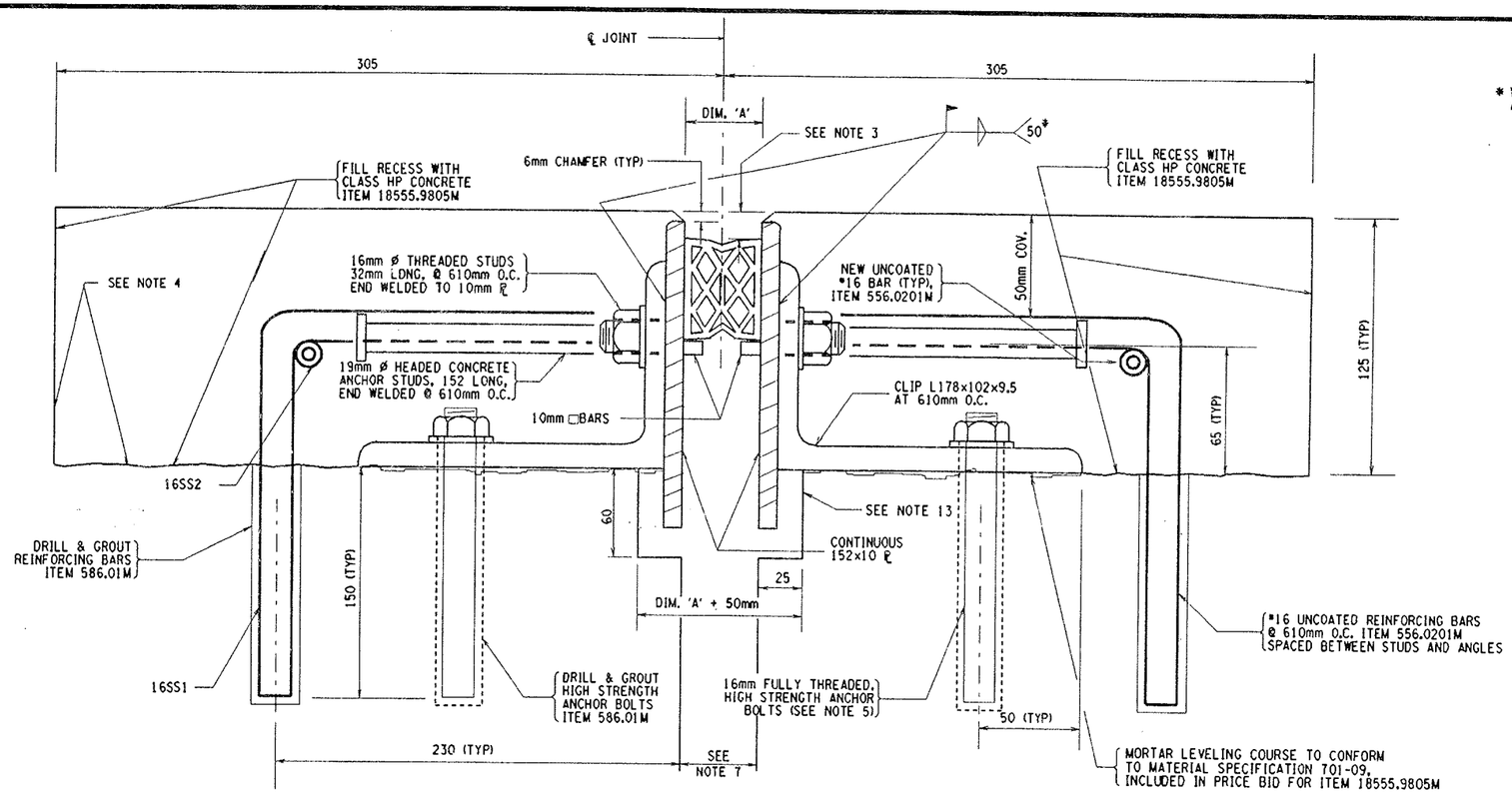

MODIFIED ARMORED COMPRESSION JOINT DETAIL

* WELD SHALL BE 50mm EACH SIDE OF ANGLE AFTER SETTING FOR GRADE

SEALS (mm)			ARMORED JOINT SYSTEM	
TYPE	NOMINAL WIDTH	DIM. "A" @ 20°C.	TYPE	END CONDITION
1	44	25	A1	Fixed End Only
2	51	30	A2	Exp. up to 18 m
3	64	38	A3	Exp. over 18 m to 23 m
4	76	44	A4	Exp. over 23 m to 27 m
5	89	52	A5	Exp. over 27 m to 38 m

Maximum Skew Limits: Fixed End - No Limit
Exp. End - 45° A2 thru A6

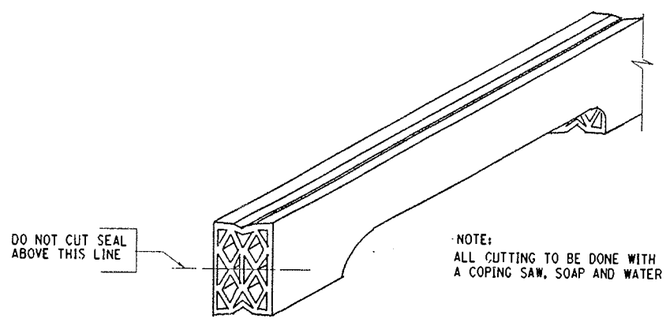

DETAIL FOR CUTTING SEAL

NOTES:

1. THE TEMPERATURE OF THE BRIDGE MUST BE TAKEN ON THE STRUCTURAL STEEL SURFACE TO DETERMINE THE TEMPERATURE CORRECTION FOR THE JOINT OPENINGS.
2. THE BAR LIST IS LOCATED ON DWGS. BL-2 TO BL-3.
3. THIS DEPTH SHALL BE INDICATED ON THE SHOP DRAWINGS AND SHALL BE SUCH THAT WHEN THE SEAL IS COMPRESSED TO 50% OF ITS NORMAL WIDTH, THE TOP OF THE SEAL SHALL BE NOT LESS THAN 6mm NOR MORE THAN 19mm BELOW THE TOP OF THE ROADWAY.
4. THOROUGHLY COAT THE BOTTOM AND VERTICAL SURFACES OF THE RECESS WITH MATERIAL SPEC. 721-03, EPOXY POLYSULFIDE GROUT, OR MATERIAL SPEC. 705-22, PORTLAND CEMENT MORTAR BONDING GROUT. THE COST OF FURNISHING AND PLACING THE MATERIAL SHALL BE INCLUDED IN THE PRICE BID ITEM 18555.9805M.
5. THE LOAD TESTING REQUIREMENTS DICTATED FOR USE WITH ITEM 586.01M ARE WAIVED FOR THE HIGH-STRENGTH BOLTS IN THE JOINT BLOCKOUT. THE NUTS ON THE BOLTS SHALL BE TIGHTENED TO A SNUG TIGHT CONDITION.
6. A WATER-TIGHT INTEGRITY TEST SHALL BE PERFORMED BY THE CONTRACTOR AT ALL COMPRESSION SEAL JOINT INSTALLATIONS. THE FOLLOWING TEST PARAMETERS SHALL BE INCORPORATED IN THE TEST:
   1. A 15 MINUTE MINIMUM PERIOD OF STANDING WATER, WITH A 25mm MINIMUM DEPTH SHALL BE USED.
   2. IN ADDITION, IN LOCATIONS OF COPED AREAS OF THE SEAL, BENDS, ETC., WATER PRESSURE SHALL BE APPLIED, TO THE SATISFACTION OF THE E.I.C FOR A 15 MINUTE PERIOD.
   3. LIMITS OF TEST AREA SHALL BE FROM FACE OF CURB (PARAPET) TO FACE OF CURB (PARAPET) ON THE DECK SURFACE.
7. CONCRETE DECKS, INCLUDING FASCIAS, THAT ARE LESS THAN 25mm APART SHALL BE SAWCUT TO CREATE A 25mm MINIMUM OPENING. THE COST FOR THIS WORK SHALL BE INCLUDED IN THE PRICE BID FOR THE JOINT ITEMS.
8. PRIOR TO THE START OF WORK AT EACH JOINT, THE CONTRACTOR SHALL SUBMIT A WRITTEN PLAN FOR THE SPECIFICS OF THE TESTING, INCLUDING CONTAINMENT OF THE WATER AND THE METHOD TO BE USED FOR ACCESS BY THE E.I.C. TO THE BOTTOM OF THE JOINT BEING TESTED.
9. THE COST OF ALL LABOR, EQUIPMENT AND MATERIALS REQUIRED FOR THE TESTING WHICH INCLUDES, BUT IS NOT LIMITED TO:
   1. A CONTAINMENT SYSTEM FOR THE TEST WATER.
   2. PROVISIONS FOR E.I.C. ACCESS TO THE BOTTOM OF THE JOINT.

   SHALL BE INCLUDED IN THE PRICE BID FOR THE RESPECITVE JOINT ITEMS.
10. ALL DIMENSIONS ARE SHOWN IN MILLIMETERS UNLESS OTHERWISE NOTED.
11. THE COST OF ALL LABOR, EQUIPMENT, AND MATERIALS TO INSTALL THE NEW JOINT SHALL BE INCLUDED IN THE UNIT PRICE BID FOR THE MAC-1 JOINT ITEM.
12. MORTAR LEVELING COURSE SHALL CONFORM TO MATERIAL SPECIFICATION 701-09 AND SHALL BE INCLUDED IN THE PRICE BID FOR ITEM 18555.9805M.
13. THE DIMENSIONS OF THE AREA UNDER THE 152x10 PLATES ARE SHOWN TO ALLOW SPACE FOR THE PLATES TO REST FREELY. IF THERE IS ALREADY ADEQUATE SPACE, NO CONCRETE REMOVAL OR REPLACEMENT IS REQUIRED IN THIS AREA.

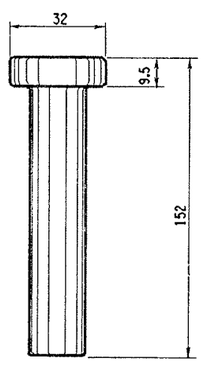

DETAIL OF HEADED CONCRETE ANCHOR STUD

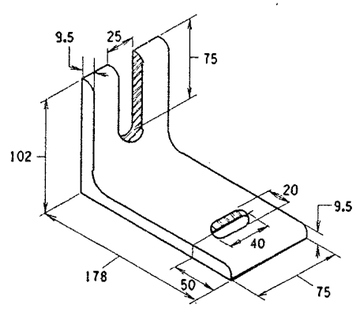

DETAIL OF CLIP ANGLE

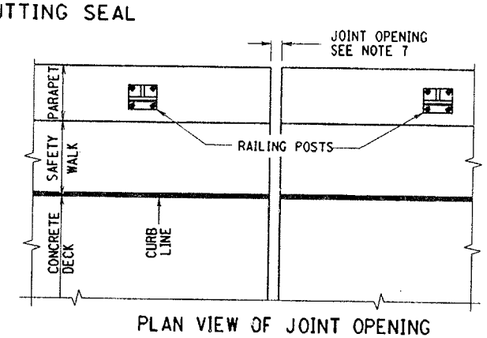

PLAN VIEW OF JOINT OPENING
NOT TO SCALE

ALL DIMENSIONS ARE IN mm UNLESS OTHERWISE NOTED

AS BUILT REVISIONS

SIGNATURE | DATE

MODIFIED ARMORED COMPRESSION (MAC) JOINT DETAILS

STATE OF NEW YORK
DEPARTMENT OF TRANSPORTATION

FILENAME	REGION	DATE	DRAWING NO.
380406MC.J1A	3	12/99	JT-3

DESIGN SUPERVISOR ____ JOB MANAGER ____ DESIGNED BY ____ ESTIMATED BY ____ DRAFTED BY ____ CHECKED BY ____ CHECKED BY ____

FED ROAD REG. NO.	STATE	CONTRACT NO.	SHEET NO.	TOTAL SHEETS
1	N.Y.	D258367	131	354

INTERSTATE BRIDGE DECK OVERLAY PROJECT
VARIOUS BRIDGES ON I-690, I-81 AND I-481
ONONDAGA AND OSWEGO COUNTIES

P.I.N. 3804.06 | B.I.N. VARIOUS

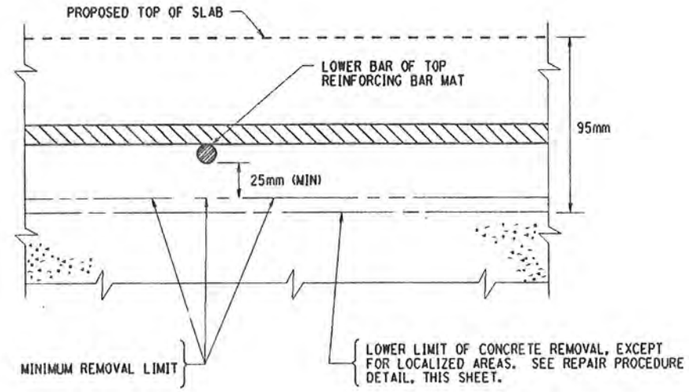

PARTIAL SECTION OF STRUCTURAL SLAB SHOWING LIMITS OF COMPLETE CONCRETE REMOVAL FROM AROUND UPPER AND LOWER BARS.

REINFORCING BAR EXPOSURE-BOTH BARS OF UPPER BAR MAT

NOT TO SCALE

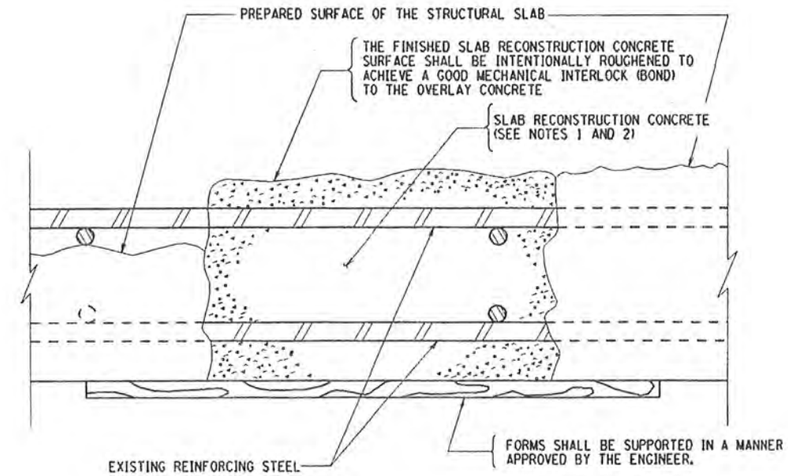

REPAIR PROCEDURE-LOCALIZED AREAS

NOT TO SCALE

PLAN-WELDED SPLICE

NOT TO SCALE

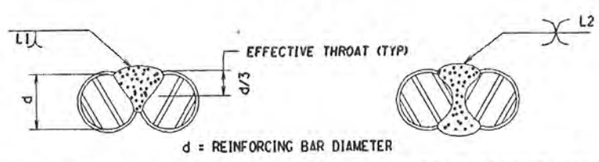

SINGLE FLARE V-GROOVE WELD DOUBLE FLARE V-GROOVE WELD

MINIMUM WELD LENGTHS (mm)		
BAR SIZE	SINGLE FLARE V-GROOVE WELD L1	DOUBLE FLARE V-GROOVE WELD L2
10, 13, 16	100	65
19	115	70
22	125	75
25	140	85

WELDING NOTES:

1. WELDER SHALL BE QUALIFIED IN ACCORDANCE WITH THE "NEW YORK STATE STEEL CONSTRUCTION MANUAL."
2. FOR WELDING DETAILS SEE SECTION 7 OF THE "NEW YORK YORK STATE STEEL CONSTRUCTION MANUAL."
3. MECHANICAL SPLICES SHALL BE USED IN ALL CASES OTHER THAN LAPPED TIED SPLICES.

LAPPED, WELDED SPLICE

NOT TO SCALE

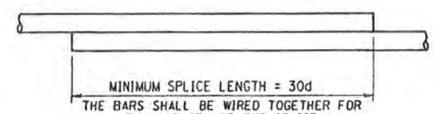

LAPPED, TIED SPLICE

NOT TO SCALE

NOTE:

1. THE SLAB RECONSTRUCTION ITEM IS SERIALIZED TO DISTINGUISH ITS USAGE ON EACH STRUCTURE. THE COST OF WORK SHALL BE INCLUDED IN THE PRICE BID FOR THE ADJACENT SLAB RECONSTRUCTION SLAB ITEM.
2. THE FULL DEPTH SLAB REPAIR AREAS (SEE DWG. AB-7, EB-44, 45 AND 46) SHALL BE REPAIRED WITH CONCRETE FOR STRUCTURES, CLASS HP, ITEM 18555.9805M.

THESE SHEETS DO NOT INDICATE ANY FULL DEPTH REPAIRS FOR BIN 1093682

ALL DIMENSIONS ARE IN mm UNLESS OTHERWISE NOTED

AS BUILT REVISIONS

SIGNATURE DATE

DETAILS FOR STRUCTURAL SLAB OVERLAY REPAIR PREPARATION

STATE OF NEW YORK
DEPARTMENT OF TRANSPORTATION

FILENAME	REGION	DATE	DRAWING NO.
380406SS.M1A	3	12/99	SS-1

DESIGN SUPERVISOR ___ JOB MANAGER ___ DESIGNED BY ___ CHECKED BY ___ ESTIMATED BY ___ DRAFTED BY ___ CHECKED BY ___

USER = gahube

FED ROAD REG. NO.	STATE	CONTRACT NO.	SHEET NO.	TOTAL SHEETS
1	N.Y.	D258367	132	354

INTERSTATE BRIDGE DECK REPAIR PROJECT
VARIOUS LOCATIONS ON I-81, I-690 AND I-481
ONONDAGA AND OSWEGO COUNTIES

P.I.N. 3804.06 | B.I.N. VARIOUS

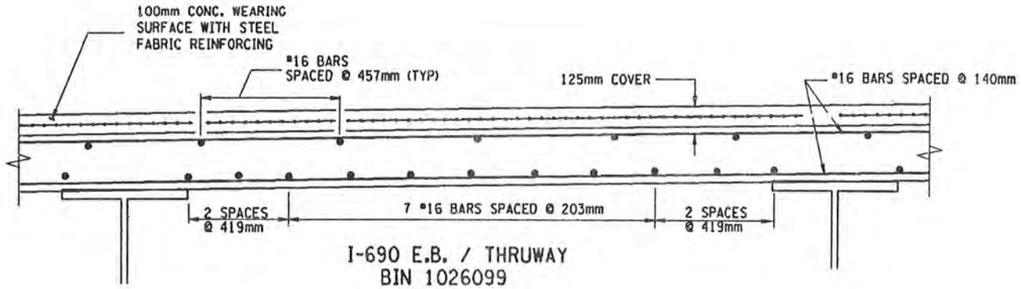

I-690 E.B. / THRUWAY
BIN 1026099
NO SCALE

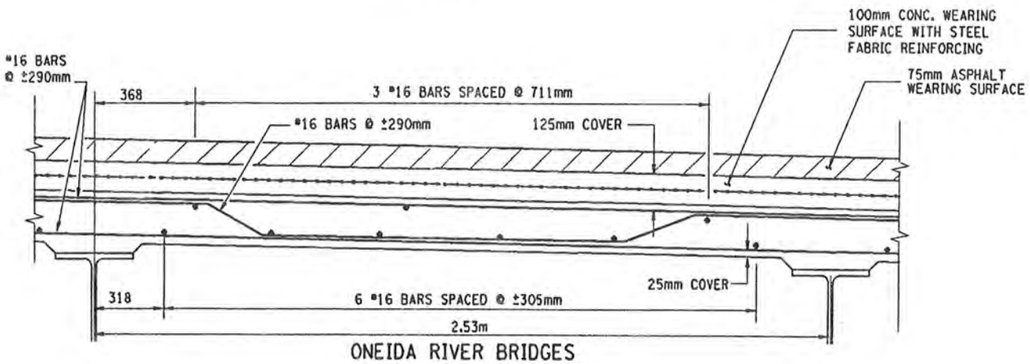

ONEIDA RIVER BRIDGES

NO SCALE

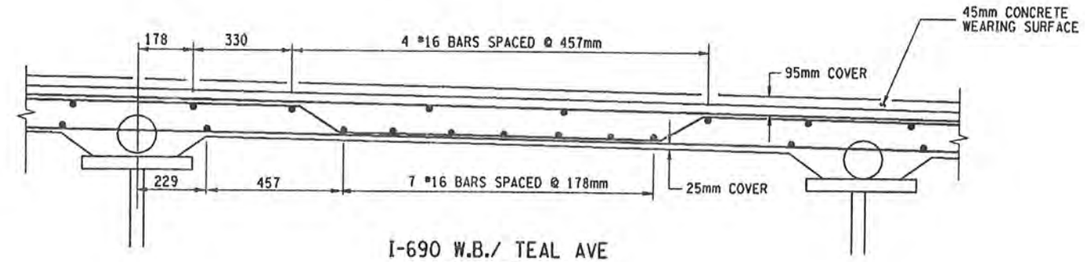

I-690 W.B./ TEAL AVE
BIN 1051149
NO SCALE

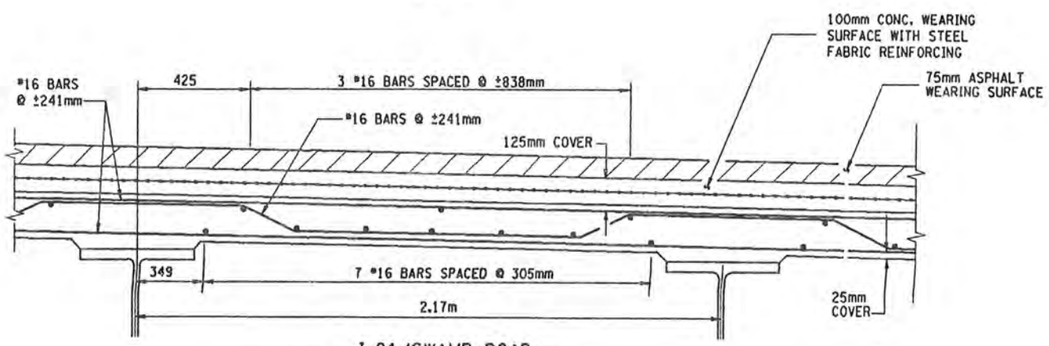

I-81/SWAMP ROAD
BINS 1031771 AND 1031772
NO SCALE

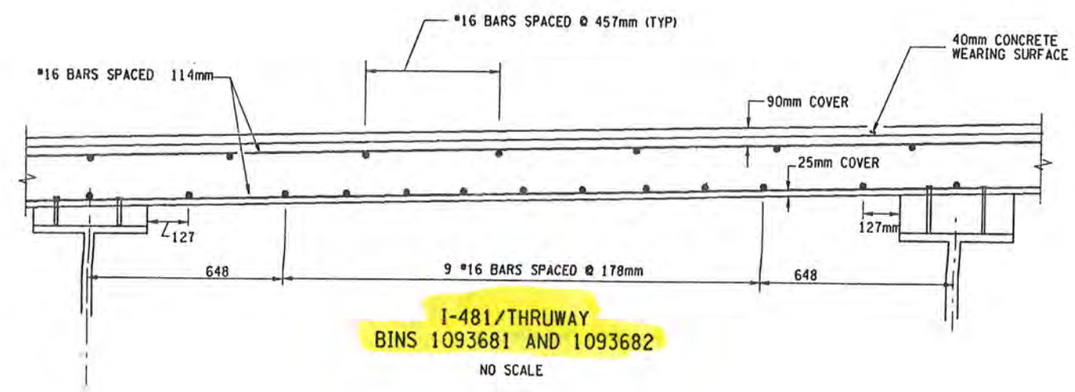

I-481/THRUWAY
BINS 1093681 AND 1093682
NO SCALE

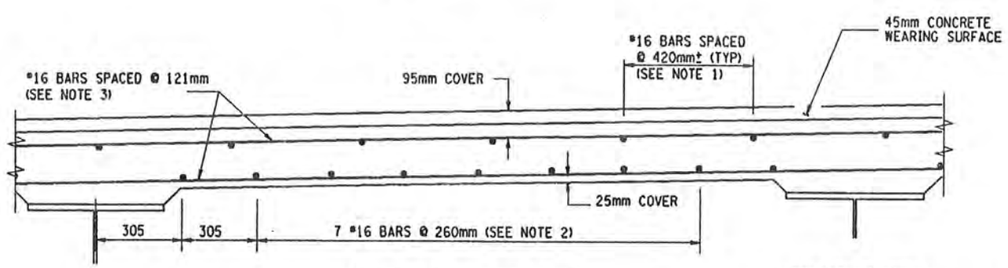

I-690 W.B. / BEECH ST.
BIN 1051139
NO SCALE

BIN 1051139 NOTES:
1. SPAN 15 SPACING VARIES, 315mm TO 420mm
2. SPAN 14 SPACING VARIES, 225mm± TO 260mm±
   SPAN 15 SPACING VARIES 178mm± TO 298mm±
3. SPAN 15 SPACING IS 114mm @ EAST END ONLY

ALL DIMENSIONS ARE IN mm UNLESS OTHERWISE NOTED

AS BUILT REVISIONS

SIGNATURE | DATE

EXISTING DECK REINFORCING DETAILS

STATE OF NEW YORK
DEPARTMENT OF TRANSPORTATION

FILENAME	REGION	DATE	DRAWING NO.
380406RB.M1A	3	1/00	SS-2

DESIGN SUPERVISOR | JOB MANAGER | DESIGNED BY | ESTIMATED BY | DRAFTED BY | CHECKED BY | CHECKED BY

FED ROAD REG. NO.	STATE	CONTRACT NO.	SHEET NO.	TOTAL SHEETS
1	N.Y.	D258367	133	354

INTERSTATE BRIDGE DECK OVERLAY PROJECT

VARIOUS BRIDGES ON I-690, I-81 AND I-481

ONONDAGA AND OSWEGO COUNTIES

P.I.N. 3804.06 | B.I.N. 4031761 & 2

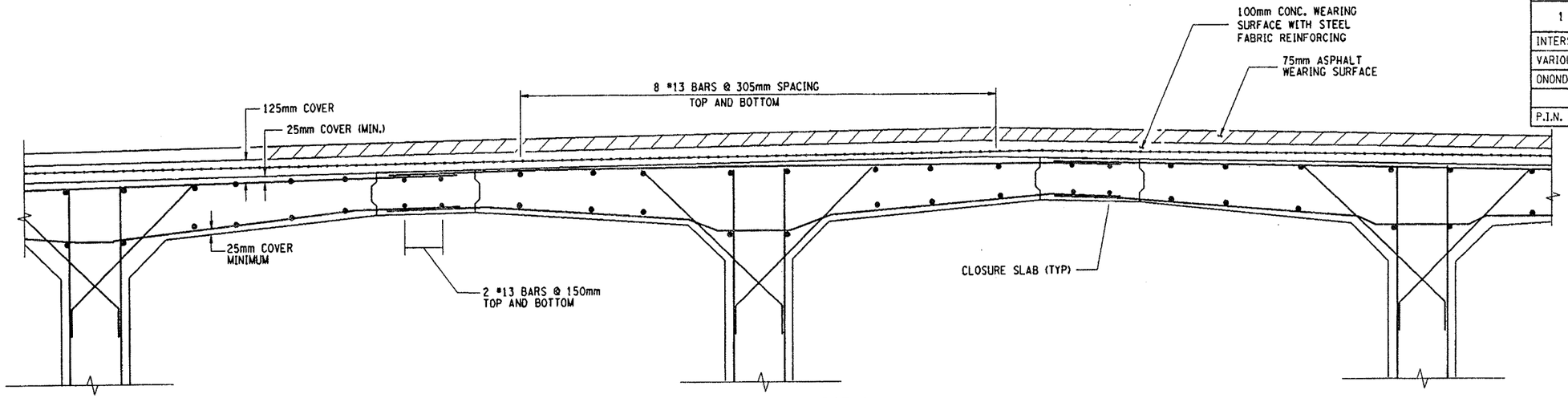

I-81 OVER ONEIDA LAKE/BARGE CANAL
BINS 4031761 AND 4031762
SPAN 2
NO SCALE

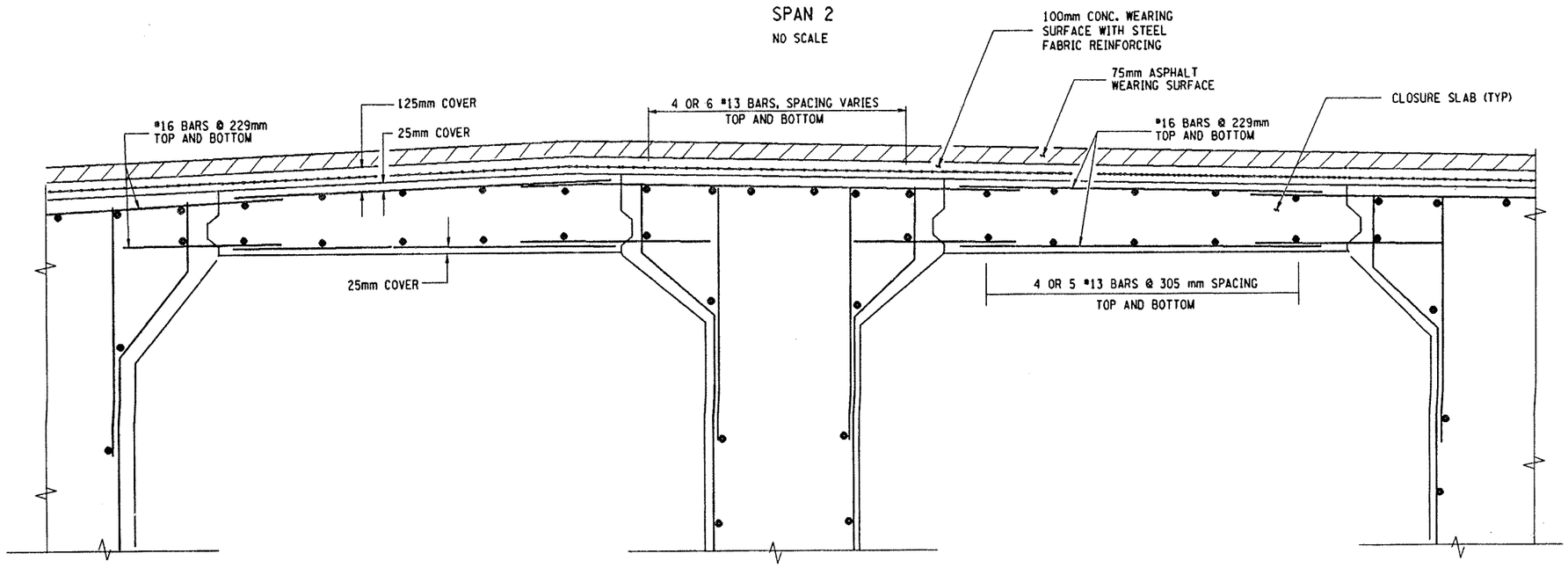

I-81 OVER ONEIDA LAKE/BARGE CANAL
BINS 4031761 AND 4031762
SPANS 1 & 3
NO SCALE

ALL DIMENSIONS ARE IN mm UNLESS OTHERWISE NOTED

AS BUILT REVISIONS

SIGNATURE | DATE

EXISTING DECK REINFORCING DETAILS

STATE OF NEW YORK
DEPARTMENT OF TRANSPORTATION

FILENAME	REGION	DATE	DRAWING NO.
380406RB.M1A	3	1/00	SS-3

CHECKED BY
DRAFTED BY
ESTIMATED BY
CHECKED BY
DESIGNED BY
JOB MANAGER
DESIGN SUPERVISOR

USER = DGNUSERNAME

MARK	NO.	LENGTH	TYPE	WEIGHT	A	B	C	D	E	F	G	H / H1	H2	J	K / K1	K2	L	O
BIN 1031772 - CONTINUED																		
MISC. SLAB REPAIR																		
16SD1	---	10.0m	N1	16 kg		LENGTH VARIES ACCORDING TO NEED												10.00m
SUBTOTAL EPOXY BARS:				1830 kg														
SUBTOTAL UNCOATED BARS:				2088 kg														
BIN 1051139 - JOINTS (STAGE I)																		
W. ABUT. JOINT																		
16SS1	18	0.42m	17	12 kg		0.21m	0.21m	0										
16SS2	2	5.32m	N1	17 kg														5.32m
PIER #1 JOINT																		
16SS1	18	0.42m	17	12 kg		0.21m	0.21m	0										
16SS2	2	5.34m	N1	17 kg														5.34m
PIER #2 JOINT																		
16SS1	18	0.42m	17	12 kg		0.21m	0.21m	0										
16SS2	2	5.38m	N1	17 kg														5.38m
PIER #3 JOINT																		
16SS1	18	0.42m	17	12 kg		0.21m	0.21m	0										
16SS2	2	5.38m	N1	17 kg														5.38m
PIER #4 JOINT																		
16SS1	18	0.42m	17	12 kg		0.21m	0.21m	0										
16SS2	2	5.50m	N1	17 kg														5.50m
PIER #5 JOINT																		
16SS1	18	0.42m	17	12 kg		0.21m	0.21m	0										
16SS2	2	5.30m	N1	16 kg														5.30m
PIER #6 JOINT																		
16SS1	18	0.42m	17	12 kg		0.21m	0.21m	0										
16SS2	2	5.25m	N1	16 kg														5.25m
PIER #7 JOINT																		
16SS1	18	0.42m	17	12 kg		0.21m	0.21m	0										
16SS2	2	5.25m	N1	16 kg														5.25m
PIER #8 JOINT																		
16SS1	18	0.42m	17	12 kg		0.21m	0.21m	0										
16SS2	2	5.25m	N1	16 kg														5.25m
PIER #9 JOINT																		
16SS1	18	0.42m	17	12 kg		0.21m	0.21m	0										
16SS2	2	5.25m	N1	16 kg														5.25m
PIER #10 JOINT																		
16SS1	18	0.42m	17	12 kg		0.21m	0.21m	0										
16SS2	2	5.25m	N1	16 kg														5.25m
PIER #11 JOINT																		
16SS1	18	0.42m	17	12 kg		0.21m	0.21m	0										
16SS2	2	5.25m	N1	16 kg														5.25m
PIER #12 JOINT																		
16SS1	18	0.42m	17	12 kg		0.21m	0.21m	0										
16SS2	2	5.25m	N1	16 kg														5.25m
PIER #13 JOINT																		
16SS1	18	0.42m	17	12 kg		0.21m	0.21m	0										
16SS2	2	5.25m	N1	16 kg														5.25m
PIER #14 JOINT																		
16SS1	18	0.42m	17	12 kg		0.21m	0.21m	0										
16SS2	2	5.25m	N1	16 kg														5.25m
E. ABUT. JOINT																		
16SS1	18	0.42m	17	12 kg		0.21m	0.21m	0										
16SS2	2	5.25m	N1	16 kg														5.25m
				453 kg	THIS POUR													

MARK	NO.	LENGTH	TYPE	WEIGHT	A	B	C	D	E	F	G	H / H1	H2	J	K / K1	K2	L	O
BIN 1051139 - JOINTS (STAGE II)																		
W. ABUT. JOINT																		
16SS1	26	0.42m	17	17 kg		0.21m	0.21m	0										
16SS2	2	7.72m	N1	24 kg														7.72m
PIER #1 JOINT																		
16SS1	26	0.42m	17	17 kg		0.21m	0.21m	0										
16SS2	2	7.76m	N1	24 kg														7.76m
PIER #2 JOINT																		
16SS1	26	0.42m	17	17 kg		0.21m	0.21m	0										
16SS2	2	7.82m	N1	24 kg														7.82m
PIER #3 JOINT																		
16SS1	26	0.42m	17	17 kg		0.21m	0.21m	0										
16SS2	2	7.89m	N1	25 kg														7.89m
PIER #4 JOINT																		
16SS1	26	0.42m	17	17 kg		0.21m	0.21m	0										
16SS2	2	7.99m	N1	25 kg														7.99m
PIER #5 JOINT																		
16SS1	26	0.42m	17	17 kg		0.21m	0.21m	0										
16SS2	2	7.62m	N1	24 kg														7.62m
PIER #6 JOINT																		
16SS1	30	0.42m	17	20 kg		0.21m	0.21m	0										
16SS2	2	9.47m	N1	29 kg														9.47m
PIER #7 JOINT																		
16SS1	36	0.42m	17	24 kg		0.21m	0.21m	0										
16SS2	2	10.68m	N1	33 kg														10.68m
PIER #8 JOINT																		
16SS1	36	0.42m	17	24 kg		0.21m	0.21m	0										
16SS2	2	10.68m	N1	33 kg														10.68m
PIER #9 JOINT																		
16SS1	36	0.42m	17	24 kg		0.21m	0.21m	0										
16SS2	2	10.68m	N1	33 kg														10.68m
PIER #10 JOINT																		
16SS1	36	0.42m	17	24 kg		0.21m	0.21m	0										
16SS2	2	10.68m	N1	33 kg														10.68m
PIER #11 JOINT																		
16SS1	36	0.42m	17	24 kg		0.21m	0.21m	0										
16SS2	2	10.68m	N1	33 kg														10.68m
PIER #12 JOINT																		
16SS1	36	0.42m	17	24 kg		0.21m	0.21m	0										
16SS2	2	10.68m	N1	33 kg														10.68m
PIER #13 JOINT																		
16SS1	36	0.42m	17	24 kg		0.21m	0.21m	0										
16SS2	2	10.68m	N1	33 kg														10.68m
PIER #14 JOINT																		
16SS1	38	0.42m	17	25 kg		0.21m	0.21m	0										
16SS2	2	11.14m	N1	35 kg														11.14m
E. ABUT. JOINT																		
16SS1	48	0.42m	17	31 kg		0.21m	0.21m	0										
16SS2	2	14.33m	N1	45 kg														14.33m
				790 kg	THIS POUR													
MISC. SLAB REPAIR																		
16SD1	---	100.00m	N1	155 kg		LENGTH VARIES ACCORDING TO NEED												
SUBTOTAL UNCOATED BARS:				1440 kg														

FED ROAD REG. NO.	STATE	CONTRACT NO.	SHEET NO.	TOTAL SHEETS
1	N.Y.	D258367	136	354

INTERSTATE BRIDGE DECK OVERLAY PROJECT
VARIOUS BRIDGES ON I-81, I-690 AND I-481
ONONDAGA AND OSWEGO COUNTIES

P.I.N. 3804.06 | B.I.N. VARIOUS

* DENOTES AVERAGE LENGTH

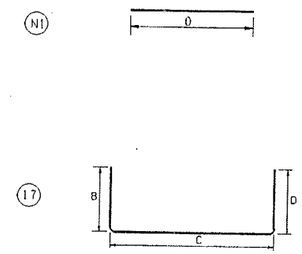

AS BUILT REVISIONS

SIGNATURE DATE

BAR LIST
SHEET 3 OF 4

STATE OF NEW YORK
DEPARTMENT OF TRANSPORTATION

FILENAME	REGION	DATE	DRAWING NO.
380406AA.B1A	3	12/99	BL-3

ALL DIMENSIONS ARE IN m UNLESS OTHERWISE NOTED

MARK	NO.	LENGTH	TYPE	WEIGHT	A	B	C	D	E	F	G	H H1	H2	J	K K1	K2	L	O
BIN 1051149 - JOINTS (STAGE I)																		
W. ABUT. JOINT																		
16SS1	26	0.42m	17	17 kg		0.21m	0.21m	0										
16SS2	2	7.47m	N1	23 kg														7.47m
E. ABUT. JOINT																		
16SS1	26	0.42m	17	17 kg		0.21m	0.21m	0										
16SS2	2	7.47m	N1	23 kg														7.47m
				80 kg	THIS POUR													
BIN 1051149 - JOINTS (STAGE II)																		
W. ABUT. JOINT																		
16SS1	28	0.42m	17	18 kg		0.21m	0.21m	0										
16SS2	2	8.16m	N1	25 kg														8.16m
E. ABUT. JOINT																		
16SS1	28	0.42m	17	18 kg		0.21m	0.21m	0										
16SS2	2	8.16m	N1	25 kg														8.16m
				86 kg	THIS POUR													
MISC. SLAB REPAIR																		
16SD1	—	10.0m	N1	16 kg		LENGTH VARIES ACCORDING TO NEED												
SUBTOTAL UNCOATED BARS: 182 kg																		
BIN 1093681 - JOINTS (STAGE I)																		
S. ABUT. JOINT																		
16SS1	24	0.42m	17	16 kg		0.21m	0.21m	0										
16SS2	2	7.24m	N1	22 kg														7.24m
PIER #1 JOINT																		
16SS1	26	0.42m	17	17 kg		0.21m	0.21m	0										
16SS2	2	7.78m	N1	24 kg														7.78m
N. ABUT. JOINT																		
16SS1	28	0.42m	17	18 kg		0.21m	0.21m	0										
16SS2	2	8.31m	N1	26 kg														8.31m
				123 kg	THIS POUR													
BIN 1093681 - JOINTS (STAGE II)																		
S. ABUT. JOINT																		
16SS1	24	0.42m	17	16 kg		0.21m	0.21m	0										
16SS2	2	7.24m	N1	22 kg														7.24m
PIER #1 JOINT																		
16SS1	26	0.42m	17	17 kg		0.21m	0.21m	0										
16SS2	2	7.78m	N1	24 kg														7.78m
N. ABUT. JOINT																		
16SS1	28	0.42m	17	18 kg		0.21m	0.21m	0										
16SS2	2	8.31m	N1	26 kg														8.31m
				123 kg	THIS POUR													
MISC. SLAB REPAIR																		
16SD1	—	10.0m	N1	16 kg		LENGTH VARIES ACCORDING TO NEED												
SUBTOTAL UNCOATED BARS: 262 kg																		
BIN 1093682 - JOINTS (STAGE I)																		
S. ABUT. JOINT																		
16SS1	16	0.42m	17	10 kg		0.21m	0.21m	0										
16SS2	2	4.88m	N1	15 kg														4.88m
PIER JOINT																		
16SS1	16	0.42m	17	10 kg		0.21m	0.21m	0										
16SS2	2	4.88m	N1	15 kg														4.88m
N. ABUT. JOINT																		
16SS1	16	0.42m	17	10 kg		0.21m	0.21m	0										
16SS2	2	4.88m	N1	15 kg														4.88m
				75 kg	THIS POUR													

MARK	NO.	LENGTH	TYPE	WEIGHT	A	B	C	D	E	F	G	H H1	H2	J	K K1	K2	L	O
BIN 1093682 - JOINTS (STAGE II)																		
S. ABUT. JOINT																		
16SS1	10	0.42m	17	7 kg		0.21m	0.21m	0										
16SS2	2	2.74m	N1	9 kg														2.74m
PIER JOINT																		
16SS1	10	0.42m	17	7 kg		0.21m	0.21m	0										
16SS2	2	2.74m	N1	9 kg														2.74m
N. ABUT. JOINT																		
16SS1	10	0.42m	17	7 kg		0.21m	0.21m	0										
16SS2	2	2.74m	N1	9 kg														2.74m
				48 kg	THIS POUR													
BIN 1093682 - JOINTS (STAGE III)																		
S. ABUT. JOINT																		
16SS1	16	0.42m	17	10 kg		0.21m	0.21m	0										
16SS2	2	4.88m	N1	15 kg														4.88m
PIER JOINT																		
16SS1	16	0.42m	17	10 kg		0.21m	0.21m	0										
16SS2	2	4.88m	N1	15 kg														4.88m
N. ABUT. JOINT																		
16SS1	16	0.42m	17	10 kg		0.21m	0.21m	0										
16SS2	2	4.88m	N1	15 kg														4.88m
				75 kg	THIS POUR													
MISC. SLAB REPAIR																		
16SD1	—	10.0m	N1	16 kg		LENGTH VARIES ACCORDING TO NEED												
SUBTOTAL UNCOATED BARS: 214 kg																		
BIN 4031761 - JOINTS (STAGE I)																		
S. ABUT. JOINT																		
16SS1	16	0.42m	17	10 kg		0.21m	0.21m	0										
16SS2	2	4.88m	N1	15 kg														4.88m
BIN 4031761 - JOINTS (STAGE II)																		
S. ABUT. JOINT																		
16SS1	8	0.42m	17	5 kg		0.21m	0.21m	0										
16SS2	2	2.44m	N1	8 kg														2.44m
BIN 4031761 - JOINTS (STAGE III)																		
S. ABUT. JOINT																		
16SS1	16	0.42m	17	10 kg		0.21m	0.21m	0										
16SS2	2	4.88m	N1	15 kg														4.88m
MID-SPAN GIRDER REPAIR																		
10MS1	12	0.85m	17	16 kg		0.18m	0.49m	0.18m										
SUBTOTAL UNCOATED BARS: 79 kg																		
BIN 4031762 - JOINTS (STAGE I)																		
S. ABUT. JOINT																		
16SS1	16	0.42m	17	10 kg		0.21m	0.21m	0										
16SS2	2	4.88m	N1	15 kg														4.88m
BIN 4031762 - JOINTS (STAGE II)																		
16SS1	8	0.42m	17	5 kg		0.21m	0.21m	0										
16SS2	2	2.44m	N1	8 kg														2.44m
BIN 4031762 - JOINTS (STAGE III)																		
S. ABUT. JOINT																		
16SS1	16	0.42m	17	10 kg		0.21m	0.21m	0										
16SS2	2	4.88m	N1	15 kg														4.88m
MID-SPAN GIRDER REPAIR																		
10MS1	12	0.85m	17	16 kg		0.18m	0.49m	0.18m										
SUBTOTAL UNCOATED BARS: 79 kg																		

TOTAL UNCOATED BARS - 6850 kg
TOTAL EPOXY BARS - 3840 kg

ALL DIMENSIONS ARE IN m UNLESS OTHERWISE NOTED

FED ROAD REG. NO.	STATE	CONTRACT NO.	SHEET NO.	TOTAL SHEETS
1	N.Y.	D258367	137	354

INTERSTATE BRIDGE DECK OVERLAY PROJECT
VARIOUS BRIDGES ON I-81, I-690 AND I-481
ONONDAGA AND OSWEGO COUNTIES

P.I.N. 3804.06 B.I.N. VARIOUS

* DENOTES AVERAGE LENGTH

(N1)

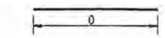

(17)

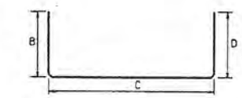

AS BUILT REVISIONS

SIGNATURE DATE

BAR LIST
SHEET 4 OF 4

STATE OF NEW YORK
DEPARTMENT OF TRANSPORTATION

FILENAME	REGION	DATE	DRAWING NO.
380406AA.B1A	3	12/99	BL-4

CHECKED BY
DRAFTED BY
ESTIMATED BY
CHECKED BY
DESIGNED BY
JOB MANAGER
DESIGN SUPERVISOR

DATE/TIME = DGN$$TIME01234567
USER = DGN$USERNAME

Watts
Architects
&Engineers

Bridge Rehabilitation

BIN 1093562

I-81 (Former I-481) NB over Manlius Center Road (Route 290)

BIN 1093562

Location: I-481 NB over Manlius Center Road (Route 290)

NYSDOT D031085 PIN 3501.60 - I-81 Viaduct Replacement or New Urban Arterial
City of Syracuse, Onondaga County
Bridge Asbestos Assessment Results

Asbestos containing materials have been identified on this bridge.

ITEM	DESCRIPTION	QUANTITY
210.481201	Removal and Disposal of Miscellaneous ACM (BV14) – Sheet Packing	112 SQ FT

The following summarizes the results of the most recent asbestos survey and record plan review.

Watts Inspection Findings (February 2014)

A bridge inspection was completed on 2/25/2014 and the following suspect ACMs were identified and sampled:

- Green girder paint
- Thin beige/grey abutment wall paint on lower part of abutments
- Thick beige/grey paint at top part of abutments
- Bearing pad
- Compressed asbestos sheet packing

Laboratory analysis indicated that the sheet packing sampled by Watts was confirmed positive for asbestos. The other listed materials were not positive for asbestos, per laboratory analytical results.

Review of Historic Plans and Previous Asbestos Survey Information

- The record plans (FISH 70-7 and D259214) in support of this project. No suspect materials were identified. NYSDOT no longer considers Type D waterstop a suspect material.

- A previous asbestos survey competed by LaBella in 1999 was reviewed in support of this project.
    - Green bridge paint
    - Compressed asbestos sheet packing
    - Grey masonry coating

Laboratory analysis indicated that the sheet packing was confirmed positive for asbestos.

Watts Architecture & Engineering

BRIDGE ASBESTOS FIELD INSPECTION FORM

BIN Number/Location: 1093562 I-481NB over Manlius Center Rd **Inspection Date:** 2/25/2014

Project Name: : I-81 Viaduct Replacement or New Urban Arterial **PIN Number:** PIN: 3501.60, D031085

Inspector(s): Scott Matthews **Watts Project No:** 13092

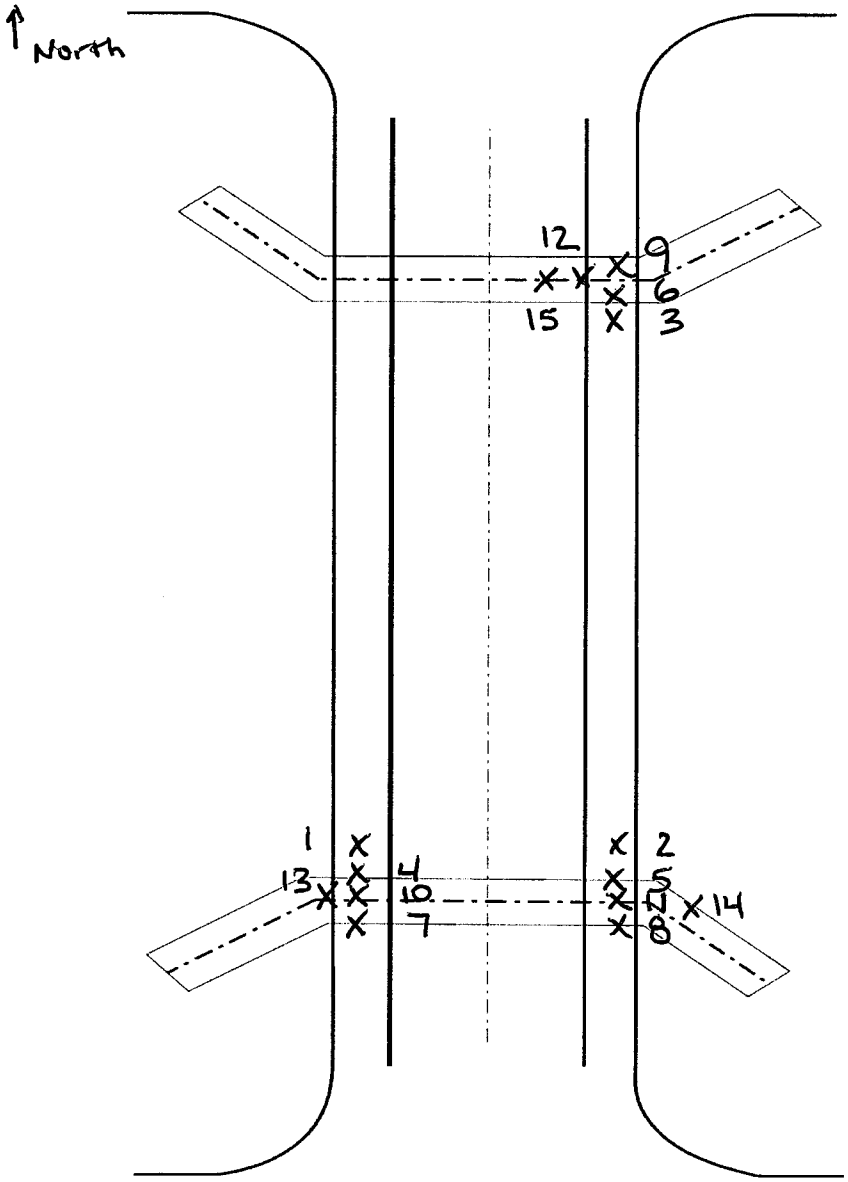

Field Inspection Checklist Item	Investigated	Present	Sampled	
Girder Paint	✓	✓	✓	1-3
Truss Paint	✓			
Abutment Coating	✓	✓	✓	4-6 7-9
Abutment Caulk	✓			
Abut. Exp. Jt. Filler	✓			
Headwall Sheet Packing	✓			
Bearing Pad	✓	✓	✓	10-12
Transite Pipe	✓			
Pipe Coating/Wtr. Proof	✓			
Scupper Wtr. Proof	✓			
Dum Dum Paint	✓			
Deck Caulk	✓			
Deck Exp. Jt. Filler	✓			
Approach Sheet Packing	✓	✓	✓	13-15
Railing Paint	✓			
Railing Caulk	✓			
Sidewalk Caulk				
Lighting Pole Caulk				
Masonry Castings				
Miscellaneous Tar				
Utilities	✓	✓		
Other				
Other				
Other				
Other				
Other				

SAMPLE LOCATION PLAN VIEW - N.T.S.

Notes: • Girder paint is green in color.
• Abutment wall paint is thinner than layer found on top of the abutment. Color is beige / light grey.

EMSL Analytical, Inc.
490 Rowley Road, Depew, NY 14043
Phone/Fax: (716) 651-0030 / (716) 651-0394
http://www.EMSL.com buffalolab@emsl.com

EMSL Order:	141400852
CustomerID:	WATT50A
CustomerPO:	
ProjectID:	

Attn: **Scott Matthews**
Watts Architecture & Engineering
2610 Salina Street
Syracuse, NY 13205

Phone:	(315) 443-8611
Fax:	(315) 443-8605
Received:	03/03/14 10:00 AM
Analysis Date:	3/7/2014
Collected:	2/25/2014

Project: **13092 - I-81 Viaduct Replacement or New Urban Renewal Bin 1093562 - 481 NB Over Manlius Center Rd**

Test Report:Asbestos Analysis of Bulk Material

Test	Analyzed Date	Color	Non Asbestos Fibrous	Non Asbestos Non-Fibrous	Asbestos
Sample ID 1093562-1 *141400852-0001*		**Description**	green girder paint		
		Homogeneity	Homogeneous		
PLM NYS 198.1 Friable					**Not Analyzed**
PLM NYS 198.6 VCM					**Not Analyzed**
PLM NYS 198.6 NOB	3/6/2014	Green			**Inconclusive: None Detected**
TEM NYS 198.4 NOB	3/7/2014	Green			**None Detected**
Sample ID 1093562-2 *141400852-0002*		**Description**	green girder paint		
		Homogeneity	Homogeneous		
PLM NYS 198.1 Friable					**Not Analyzed**
PLM NYS 198.6 VCM					**Not Analyzed**
PLM NYS 198.6 NOB	3/6/2014	Green			**Inconclusive: None Detected**
TEM NYS 198.4 NOB	3/7/2014	Green			**None Detected**
Sample ID 1093562-3 *141400852-0003*		**Description**	green girder paint		
		Homogeneity	Homogeneous		
PLM NYS 198.1 Friable					**Not Analyzed**
PLM NYS 198.6 VCM					**Not Analyzed**
PLM NYS 198.6 NOB	3/6/2014	Green			**Inconclusive: None Detected**
TEM NYS 198.4 NOB	3/7/2014	Green			**None Detected**
Sample ID 1093562-4 *141400852-0004*		**Description**	grey/beige paint on masonry abutment wall thin - coat		
		Homogeneity	Homogeneous		
PLM NYS 198.1 Friable					**Not Analyzed**
PLM NYS 198.6 VCM					**Not Analyzed**
PLM NYS 198.6 NOB	3/6/2014	Gray			**Inconclusive: None Detected**
TEM NYS 198.4 NOB	3/7/2014	Gray			**None Detected**
Sample ID 1093562-5 *141400852-0005*		**Description**	grey/beige paint on masonry abutment wall thin - coat		
		Homogeneity	Homogeneous		
PLM NYS 198.1 Friable					**Not Analyzed**
PLM NYS 198.6 VCM					**Not Analyzed**
PLM NYS 198.6 NOB	3/6/2014	Gray			**Inconclusive: None Detected**
TEM NYS 198.4 NOB	3/7/2014	Gray			**None Detected**

Initial Report From 03/07/2014 13:27:34

EMSL Analytical, Inc.
490 Rowley Road, Depew, NY 14043
Phone/Fax: (716) 651-0030 / (716) 651-0394
http://www.EMSL.com buffalolab@emsl.com

EMSL Order:	141400852
CustomerID:	WATT50A
CustomerPO:	
ProjectID:	

Test Report:Asbestos Analysis of Bulk Material

Test		Color	Fibrous	Non Asbestos Non-Fibrous	Asbestos
Sample ID 1093562-6 *141400852-0006*		**Description**	grey/beige paint on masonry abutment wall thin - coat		
		Homogeneity	Homogeneous		
PLM NYS 198.1 Friable					**Not Analyzed**
PLM NYS 198.6 VCM					**Not Analyzed**
PLM NYS 198.6 NOB	3/6/2014	Gray			**Inconclusive: None Detected**
TEM NYS 198.4 NOB	3/7/2014	Gray			**None Detected**
Sample ID 1093562-7 *141400852-0007*		**Description**	grey/beige paint on top of abutment wall thick - coat		
		Homogeneity	Homogeneous		
PLM NYS 198.1 Friable					**Not Analyzed**
PLM NYS 198.6 VCM					**Not Analyzed**
PLM NYS 198.6 NOB	3/6/2014	Gray			**Inconclusive: None Detected**
TEM NYS 198.4 NOB	3/7/2014	Gray			**None Detected**
Sample ID 1093562-8 *141400852-0008*		**Description**	grey/beige paint on top of abutment wall thick - coat		
		Homogeneity	Homogeneous		
PLM NYS 198.1 Friable					**Not Analyzed**
PLM NYS 198.6 VCM					**Not Analyzed**
PLM NYS 198.6 NOB	3/6/2014	Gray			**Inconclusive: None Detected**
TEM NYS 198.4 NOB	3/7/2014	Gray			**None Detected**
Sample ID 1093562-9 *141400852-0009*		**Description**	grey/beige paint on top of abutment wall thick - coat		
		Homogeneity	Homogeneous		
PLM NYS 198.1 Friable					**Not Analyzed**
PLM NYS 198.6 VCM					**Not Analyzed**
PLM NYS 198.6 NOB	3/6/2014	Gray			**Inconclusive: None Detected**
TEM NYS 198.4 NOB	3/7/2014	Gray			**None Detected**
Sample ID 1093562-10 *141400852-0010*		**Description**	bearing pad		
		Homogeneity	Homogeneous		
PLM NYS 198.1 Friable					**Not Analyzed**
PLM NYS 198.6 VCM					**Not Analyzed**
PLM NYS 198.6 NOB	3/6/2014	Brown			**Inconclusive: None Detected**
TEM NYS 198.4 NOB	3/7/2014	Brown			**None Detected**
Sample ID 1093562-11 *141400852-0011*		**Description**	bearing pad		
		Homogeneity	Homogeneous		
PLM NYS 198.1 Friable					**Not Analyzed**
PLM NYS 198.6 VCM					**Not Analyzed**
PLM NYS 198.6 NOB	3/6/2014	Brown			**Inconclusive: None Detected**
TEM NYS 198.4 NOB	3/7/2014	Brown			**None Detected**

Initial Report From 03/07/2014 13:27:34

EMSL Analytical, Inc.
490 Rowley Road, Depew, NY 14043
Phone/Fax: (716) 651-0030 / (716) 651-0394
http://www.EMSL.com buffalolab@emsl.com

EMSL Order:	141400852
CustomerID:	WATT50A
CustomerPO:	
ProjectID:	

Test Report:Asbestos Analysis of Bulk Material

Test		Color	Fibrous	Non Asbestos Non-Fibrous	Asbestos
Sample ID 1093562-12 *141400852-0012*		**Description** bearing pad **Homogeneity** Homogeneous			
PLM NYS 198.1 Friable					**Not Analyzed**
PLM NYS 198.6 VCM					**Not Analyzed**
PLM NYS 198.6 NOB	3/6/2014	Brown			**Inconclusive: None Detected**
TEM NYS 198.4 NOB	3/7/2014	Brown			**None Detected**
Sample ID 1093562-13 *141400852-0013*		**Description** sheet packing **Homogeneity** Homogeneous			
PLM NYS 198.1 Friable					**Not Analyzed**
PLM NYS 198.6 VCM					**Not Analyzed**
PLM NYS 198.6 NOB	3/6/2014	Gray			**14.3% Chrysotile** **14.3% Total**
TEM NYS 198.4 NOB	3/7/2014				**Not Analyzed**
Sample ID 1093562-14 *141400852-0014*		**Description** sheet packing **Homogeneity** Homogeneous			
PLM NYS 198.1 Friable					**Not Analyzed**
PLM NYS 198.6 VCM					**Not Analyzed**
PLM NYS 198.6 NOB	3/6/2014	Gray			**21.0% Chrysotile** **21.0% Total**
TEM NYS 198.4 NOB	3/7/2014				**Not Analyzed**
Sample ID 1093562-15 *141400852-0015*		**Description** sheet packing **Homogeneity** Homogeneous			
PLM NYS 198.1 Friable					**Not Analyzed**
PLM NYS 198.6 VCM					**Not Analyzed**
PLM NYS 198.6 NOB	3/6/2014	Gray			**34.3% Chrysotile** **34.3% Total**
TEM NYS 198.4 NOB	3/7/2014				**Not Analyzed**

Initial Report From 03/07/2014 13:27:34

EMSL Analytical, Inc.
490 Rowley Road, Depew, NY 14043
Phone/Fax: (716) 651-0030 / (716) 651-0394
http://www.EMSL.com buffalolab@emsl.com

EMSL Order:	141400852
CustomerID:	WATT50A
CustomerPO:	
ProjectID:	

Test Report:Asbestos Analysis of Bulk Material

		Non Asbestos		
Test	**Color**	**Fibrous**	**Non-Fibrous**	**Asbestos**

Analyst(s)
Rhonda McGee

Rhonda McGee, Laboratory Manager
or other approved signatory

NOB = Non Friable Organically Bound N/A = Not Applicable VCM = Vermiculite Containing Material

-In New York State, TEM is currently the only method that can be used to determine if NOB materials can be considered or treated as non-asbestos containing.
All samples examined for the presence of vermiculite when analyzed via NYS 198.1.
-NYS Guidelines for Vermiculite containing samples are available at http://www.wadsworth.org/labcert/elapcert/forms/VermiculiteInterimGuidance_Rev070913.pdf
EMSL maintains liability limited to cost of analysis. This report relates only to the samples reported above and may not be reproduced, except in full, without written approval by EMSL. EMSL bears no responsibility for sample collection activities or analytical method limitations. Interpretation and use of test results are the responsibility of the client. Samples were received in good condition unless otherwise noted.
This report must not be used by the client to claim product certification, approval, or endorsement by NVLAP, NIST, or any agency of the federal government. This report may contain data that is not covered by the NVLAP accreditation.

Samples analyzed by EMSL Analytical, Inc. Depew, NY NYS ELAP 11606

Initial Report From 03/07/2014 13:27:34

WATTS ARCHITECTURE & ENGINEERING
ASBESTOS BULK SAMPLE CHAIN-OF-CUSTODY

Page: 1 of 2
Date: 2-25-14

Client: Parsons Engineering
Project: I-81 Viaduct Replacement or New Urban Renewal
Building / Location: BIN 1093562 481 NB over Manlius Center Rd
Contact: Scott Matthews at (315) 443-8611
Email Preliminary Results to: smatthews@watts-ae.com
Mail Invoice to: Accounts Payable, Watts Architecture & Engineering, 95 Perry Street, Buffalo, NY 14203

Watts Project No.: 13092
Turnaround Requested: ___ 3 Hr. ___ 48 Hr.
Analysis Requested: ___ 6 Hr. ___ 72 Hr.
PLM X TEM X — 12 Hr. X 5 Day
24 Hr. ___ 6-10 Day
1 week as per Matt. LD 3/3/14

Mail Report to: Scott Matthews, Watts Architecture & Engineering, 2610 S Salina Street, Syracuse, NY 13210

Sample Number	Material Description	Sample Location	Laboratory Results PLM	Laboratory Results TEM
1093562-1	Green girder paint	SW Corner		
-2	" " "	SE Corner		
-3	" " "	NE Corner		
-4	Grey/beige paint on masonry abutment wall (thin coat)	SW Corner		
-5	" " " "	SE Corner		
-6	" " " "	NE Corner		
-7	Grey/beige paint on top of abutment (thick coat)	SW Corner		
-8	" " " "	SE Corner		
-9	" " " "	NE Corner		
-10	Bearing Pad	SW Corner		
-11	" "	SE Corner		
-12	" "	NE Corner		

Sampled By: Scott Matthews Date: 2-25-14 Received By: FX Date:
Relinquished By: Scott Matthews to FedEx Date: 2-28-14 Received By: Date: 10 Am
Comments:

RECEIVED MAR 03 2014 BY:

C:\Documents and Settings\smatthews\Desktop\BulkForm.xls
2/24/2014

WATTS ARCHITECTURE & ENGINEERING
ASBESTOS BULK SAMPLE CHAIN-OF-CUSTODY

Page: 2 of 2
Date: 2-25-~~62~~ 14 AM

Client: Parsons Engineering
Project: I-81 Viaduct Replacement or New Urban Renewal
Building / Location: BIN
Contact: Scott Matthews at (315) 443-8611
Email Preliminary Results to: smatthews@watts-ae.com
Mail Invoice to: Accounts Payable
Watts Architecture & Engineering
95 Perry Street, Buffalo, NY 14203

Watts Project No.: 13092
Turnaround Requested: ___ 3 Hr. ___ 48 Hr.
Analysis Requested: ___ 6 Hr. ___ 72 Hr.
PLM X TEM X 12 Hr. X ~~5 Day~~
24 Hr. ___ 6-10 Day
12 Week as per Matt. 3/3/14

Mail Report to: Scott Matthews
Watts Architecture & Engineering
2610 S Salina Street, Syracuse, NY 13210

Sample Number	Material Description	Sample Location	Laboratory Results PLM	Laboratory Results TEM
1093562 - 13	Sheet Packing	SW Corner		
14	" "	SE Corner		
15	" "	NE Corner		

Sampled By: Scott Matthews Date: 2-25-14 Received By: RECEIVED MAR 03 2014 Date: FX
Relinquished By: Scott Matthews to FedEx Date: 2-28-14 Received By: Date: 10 Am
BY:
Comments:

C:\Documents and Settings\smatthews\Desktop\BulkForm.xls
2/24/2014

Watts
Architects
&Engineers

BIN 1093562 Inspection Photos

I-81 (Former I-481) NB over Manlius Center Road (Route 290)

Photo 1

Photo 2

Photo 3

Photo 4

Photo 5

FED. RD. REG. NO.	STATE	FEDERAL PROJECT NO.	AID NO.	SHEET NO.	TOTAL SHEETS
1	NEW YORK	F-590-3(20)	I-481-2 118	170	505

INTERSTATE ROUTE CONNECTION 570

BUTTERNUT INTERCHANGE COLLAMER

ONONDAGA COUNTY

Opalka 4/22/92 Peter Riehlman 3/29/90 K 3/22/94 Douglas R. Hilliker 3/14/96

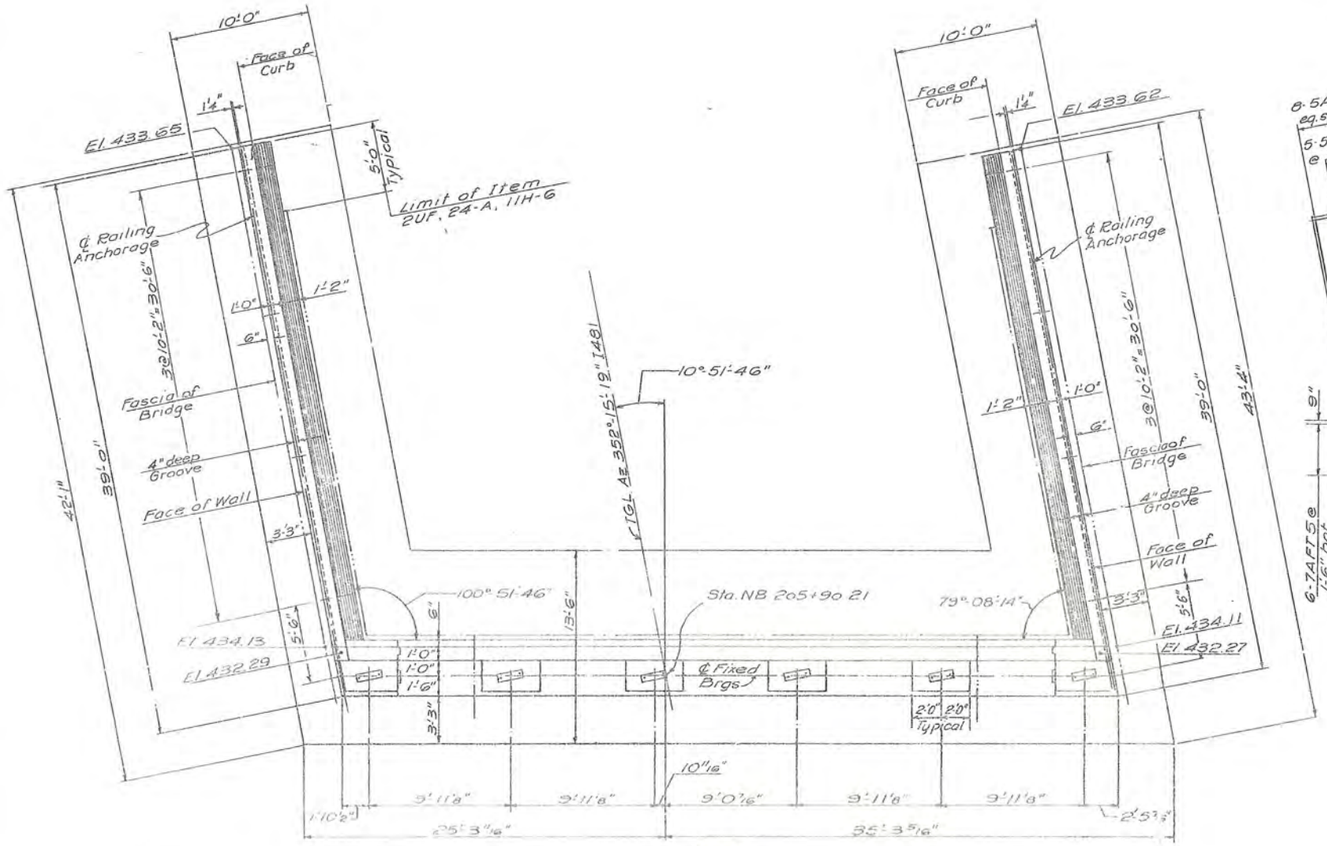

PLAN

Scale 3/16"=1'-0"

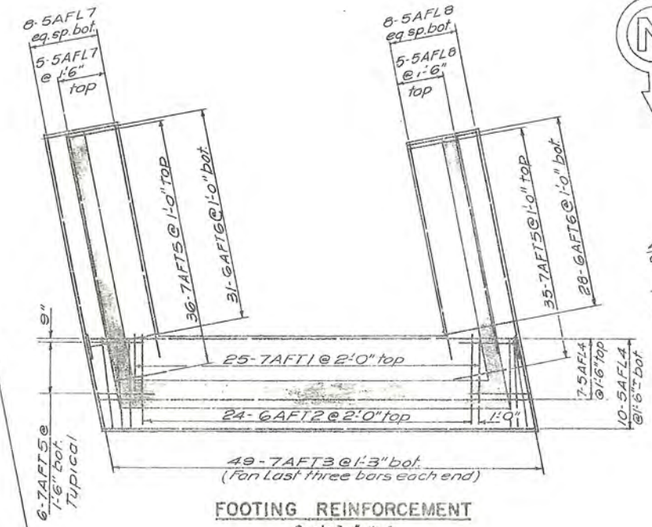

FOOTING REINFORCEMENT

Scale 3/32"=1'-0"

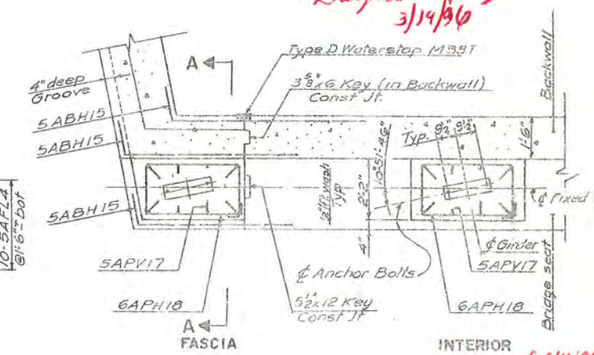

PLAN- PEDESTALS

Scale 3/8"=1'-0"

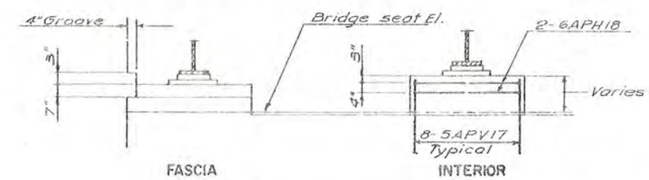

ELEVATION- PEDESTALS

Not to scale

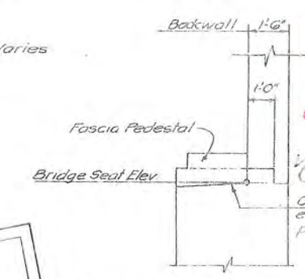

SECTION A-A

Scale 3/8"=1'-0"

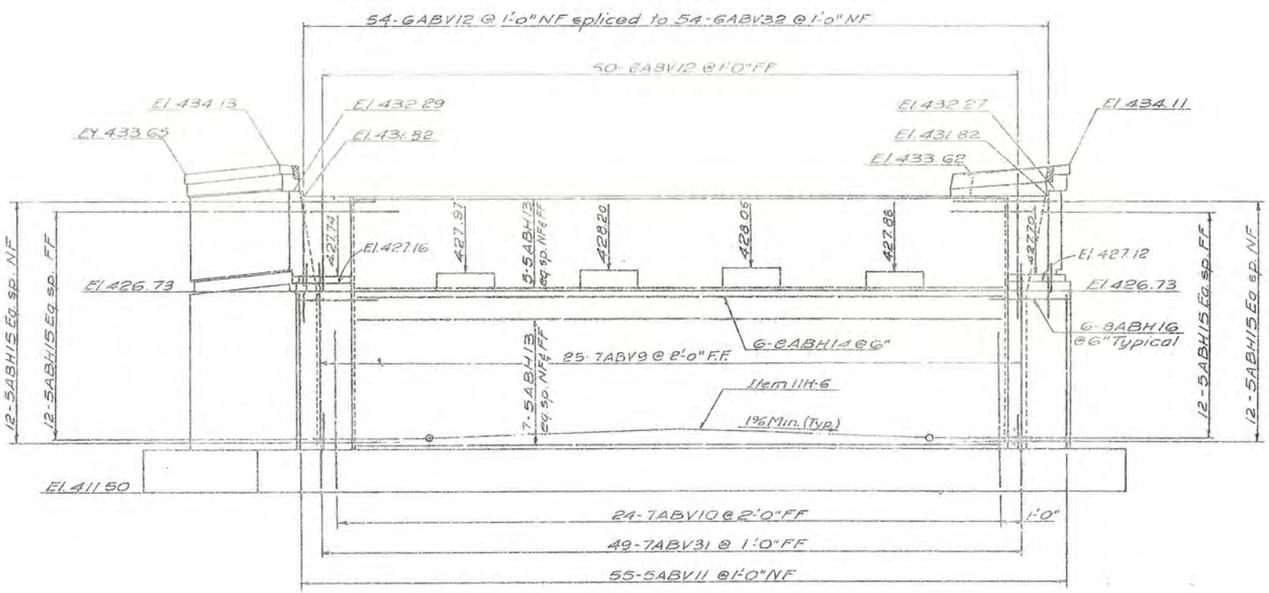

ELEVATION

Scale 3/16"=1'-0"

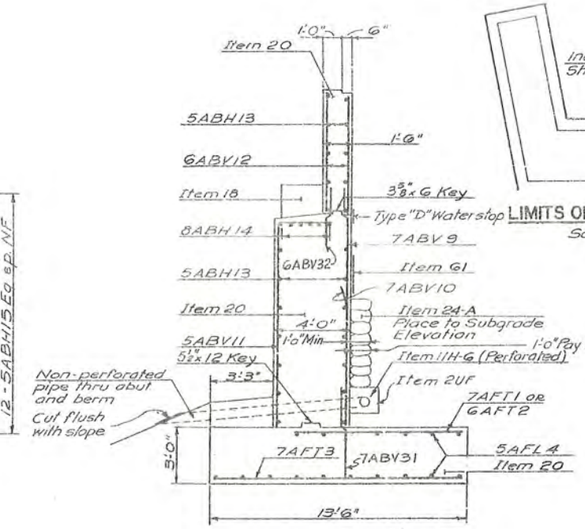

TYPICAL SECTION

Scale 1/4"=1'-0"

LIMITS OF ITEM 83 TXS

Scale 1"=20'

NOTES:

1. Anchor bolts for bearings shall be 1 1/4" ø roughened or swedged bolts, 1'-4 1/2" long and set 12" into concrete.
2. For Excavation and Backfill details see Sheet No. 128
3. For Backwall and waterstop details see Sheet No. 125
4. For Fixed Bearing detail see Sht. No. 130
5. For Rail Post spacing see Sheet No. 175

BUTTERNUT INTERCHANGE TO COLLAMER F.A.I. 481

BRIDGE No. 1 - NORTHBOUND I481 OVER SH.555 SOUTH ABUTMENT

DRAWING NO.	SCALE	DATE	SHEET NO.
7504-02	As shown	8/15/70	170

LOCKWOOD, KESSLER & BARTLETT, INC.
CONSULTING ENGINEERS — SYOSSET, NEW YORK

F.I.S.H. 70-7

FED. RD. REG. NO.	STATE	FEDERAL PROJECT NO.	SHEET NO.	TOT. SHEE
1	NEW YORK	I-690-3(26) ~~I-481-2(11)6~~	171	304

INTERSTATE ROUTE CONNECTION 570

BUTTERNUT INTERCHANGE - COLLAMER

ONONDAGA COUNTY

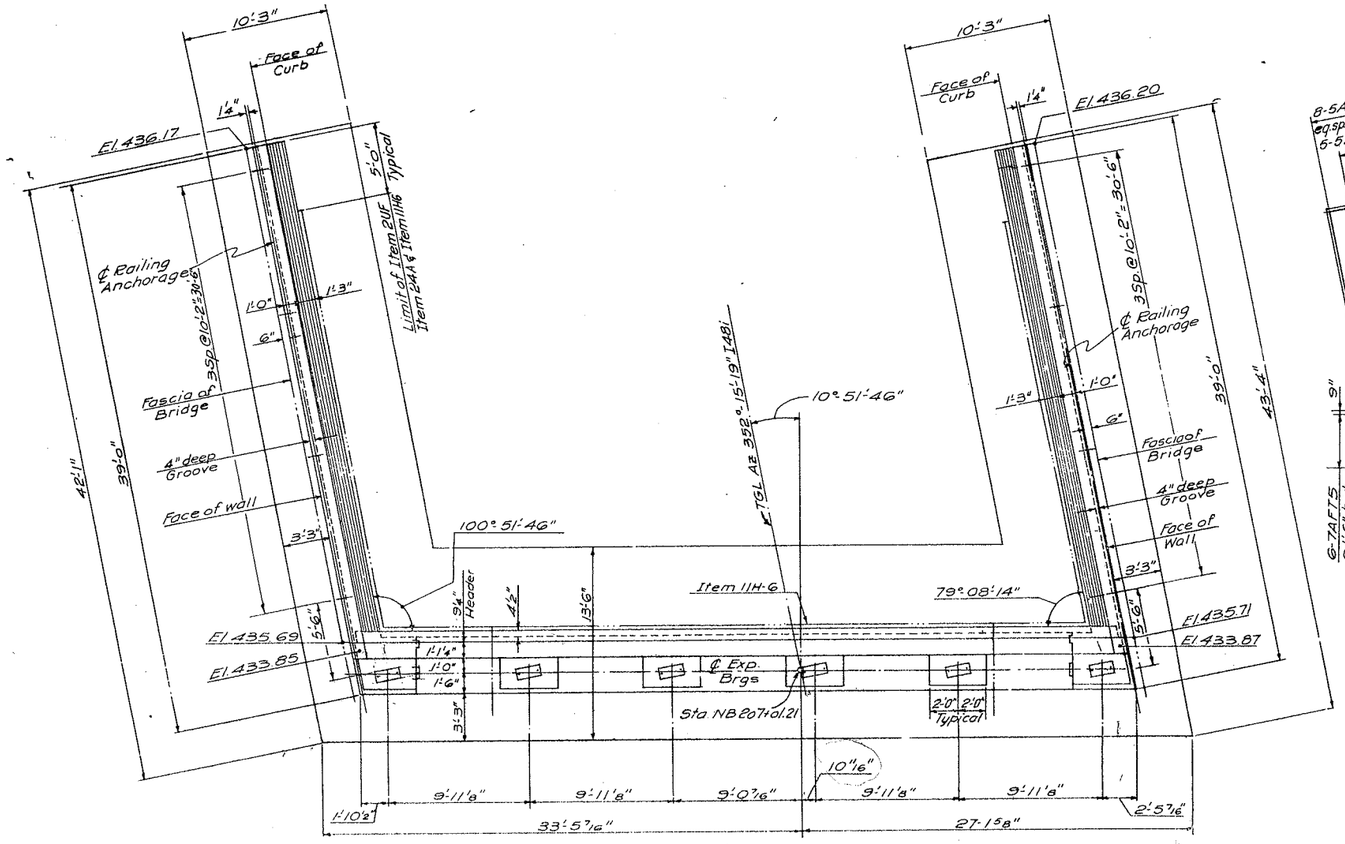

PLAN

Scale 3/16" = 1'-0"

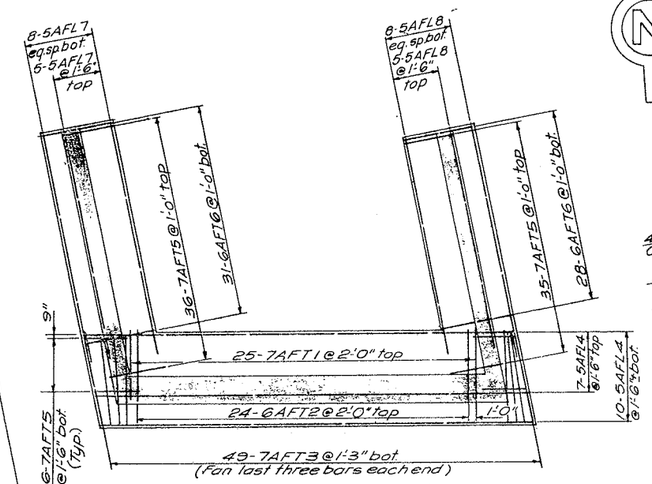

FOOTING REINFORCEMENT

Scale 3/32" = 1'-0"

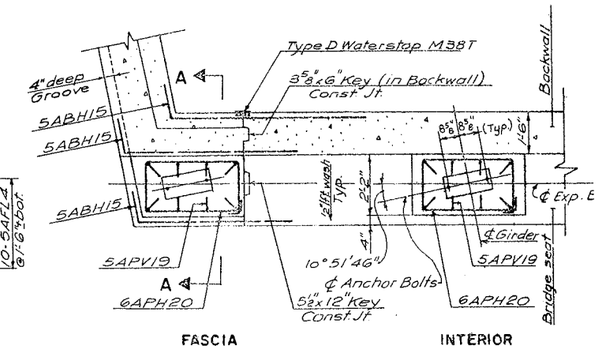

PLAN - PEDESTALS

Scale 3/8" = 1'-0"

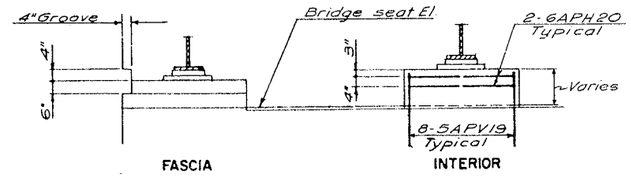

ELEVATION - PEDESTALS

Not to scale

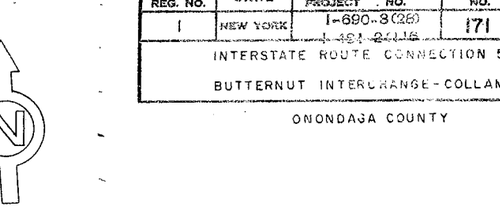

LIMITS OF ITEM 83TXS

Scale 1" = 20'

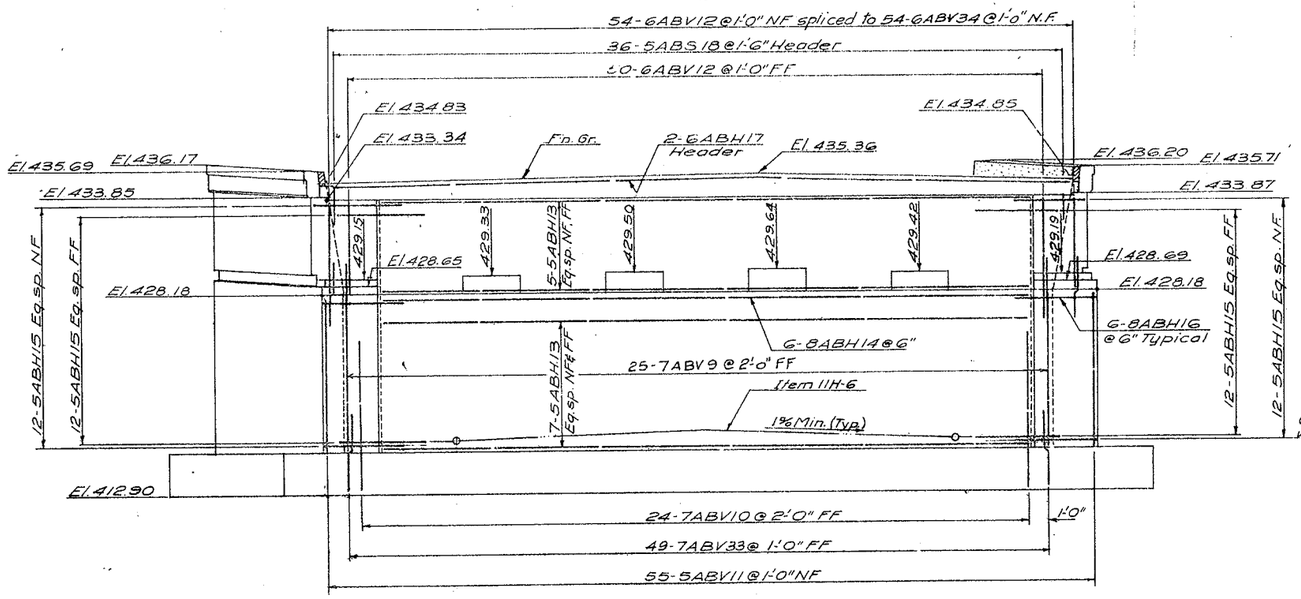

ELEVATION

Scale 3/16" = 1'-0"

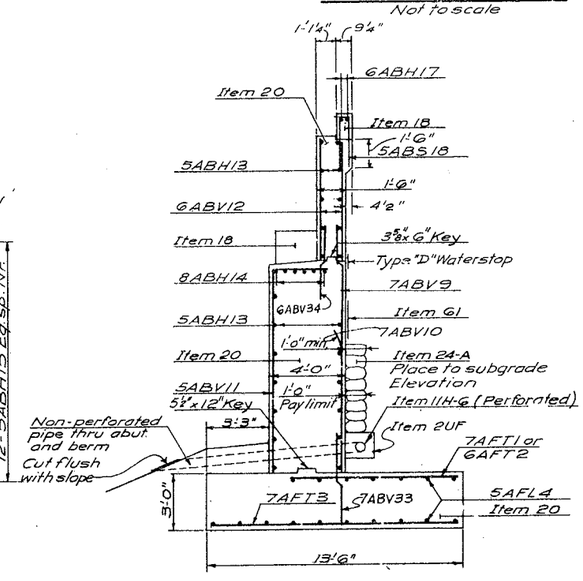

TYPICAL SECTION

Scale 1/4" = 1'-0"

NOTES:

1. Anchor bolts for bearings shall be 1¼" roughened or swedged bolts, 1'-4½" long and set 12" into concrete.
2. For Excavation and Backfill details see Sheet No. 128
3. For Backwall and Waterstop details see Sheet No. 125
4. For Expansion Bearing detail see Sht. No. 1
5. For Rail Post spacing see Sheet No. 175
6. For Section A-A - See Sheet No. 170

BUTTERNUT INTERCHANGE TO COLLAMER F.A.I. 481

BRIDGE No. 1 - NORTHBOUND + I 481 OVER S.H. 555 NORTH ABUTMENT

DRAWING NO.	SCALE	DATE	SHEET NO.
7504-02	As shown	8/15/70	171

LOCKWOOD, KESSLER & BARTLETT, INC.
CONSULTING ENGINEERS - SYOSSET, NEW YORK

FED. RD. REG. NO.	STATE	FEDERAL PROJECT AID NO.	SHEET NO.	TOTAL SHEETS
1	NEW YORK	I-890-3(28) I-181-2(116)	175	305

INTERSTATE ROUTE CONNECTION 570

BUTTERNUT INTERCHANGE-COLLAMER

ONONDAGA COUNTY

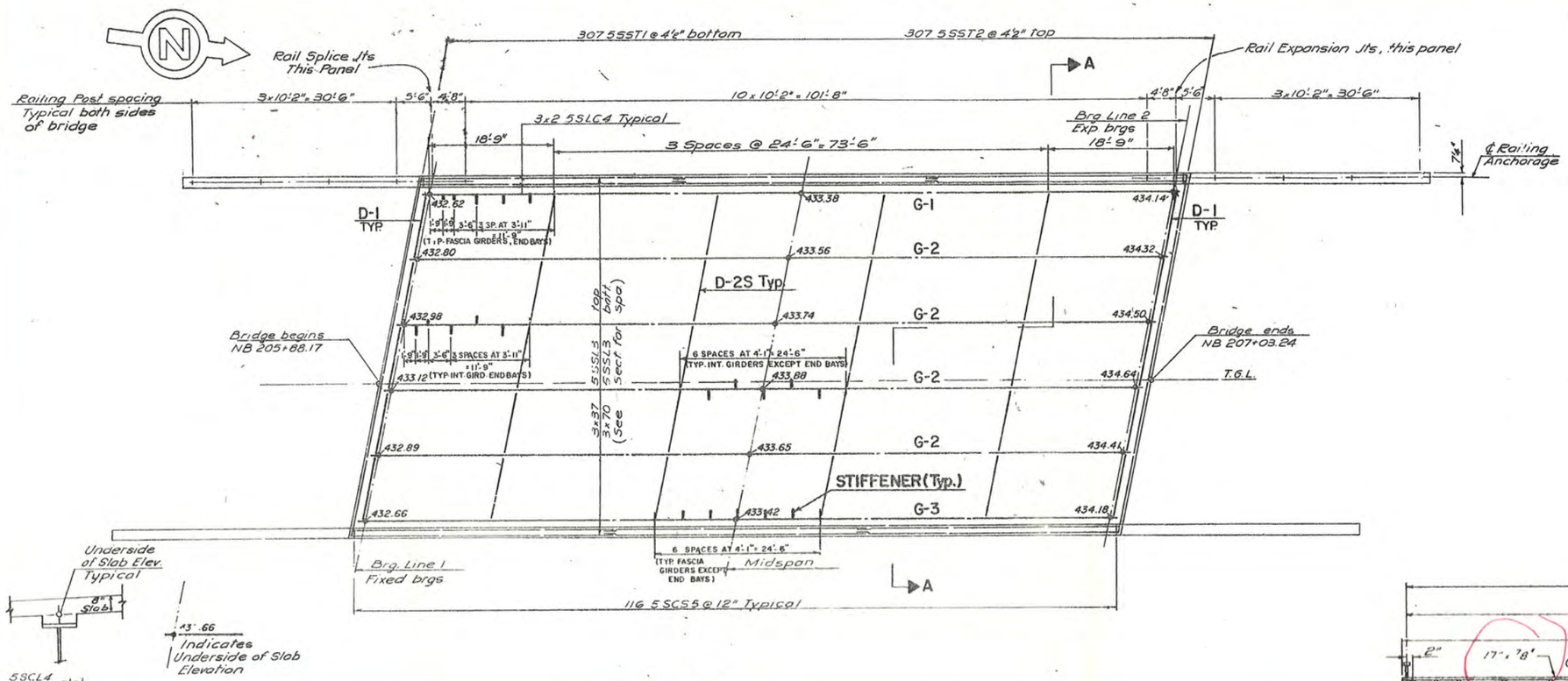

PLAN
Scale 1" = 10'

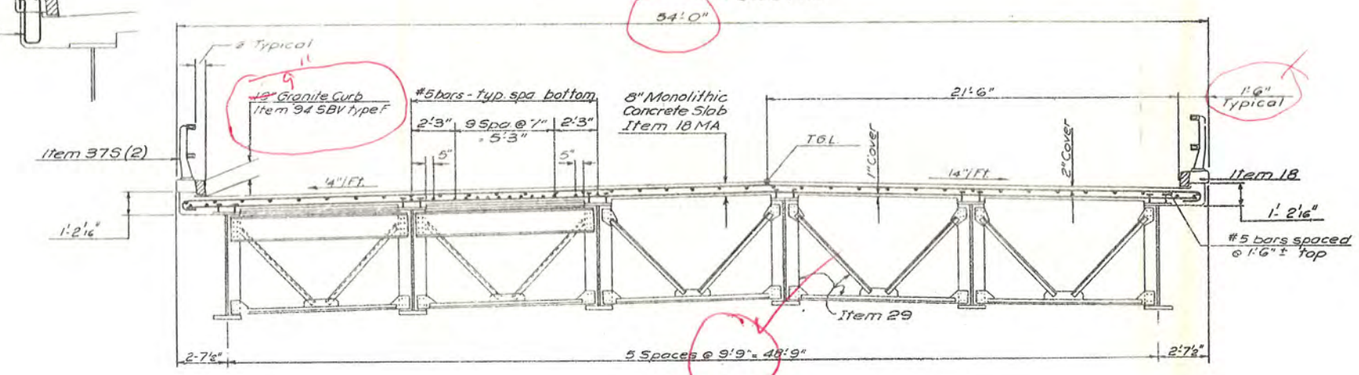

SECTION A-A
Scale ¼" = 1'

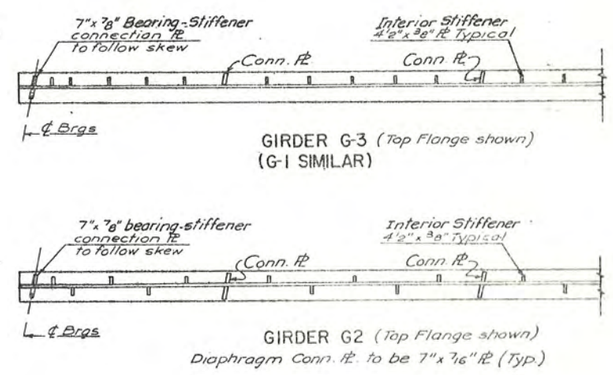

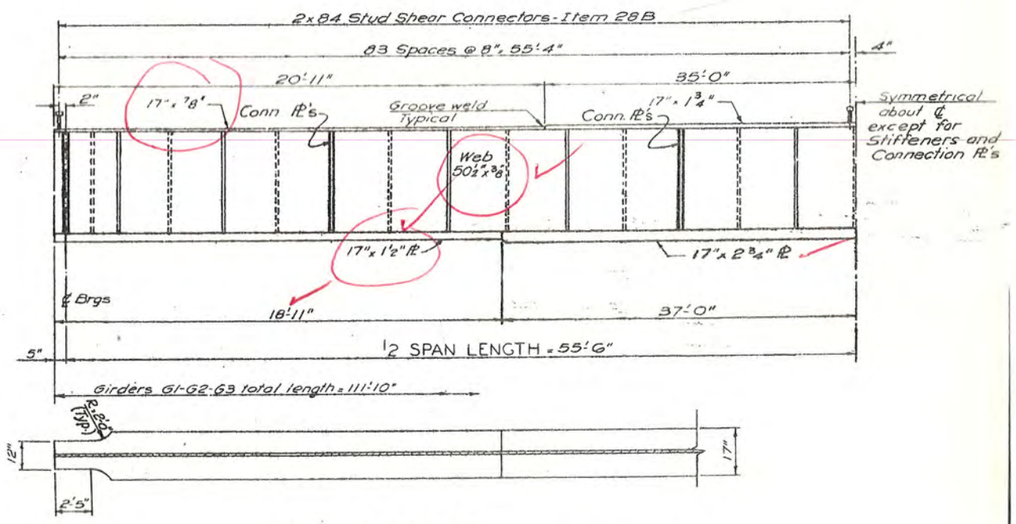

PLAN-BOTTOM FLANGE
No Scale

Notes

1. For detail of diaphragms see sheet 129
2. For weld sizes see sheet 129

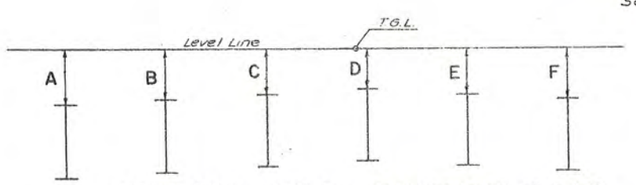

THEORETICAL VERTICAL MEASUREMENTS AT ℄ BRG.

BRG. LINE	VERTICAL MEASUREMENTS TO TOP OF STEEL					
	A	B	C	D	E	F
1	1'-5¼"	1'-3⅛"	1'-1"	11 5/16"	1'-2 1/16"	1'-4 13/16"
2	1'-5¼"	1'-3⅛"	1'-1"	11 5/16"	1'-2 1/16"	1'-4 13/16"

ADJUSTMENT FOR CAMBER		
	FASCIA GIRDER	INTERIOR GIRDER
SLAB CONCRETE	1 13/16"	2 3/8"
V.C.	0"	0"
SUPERIMPOSED DEAD LOAD	7/16"	3/8"
D.L. STEEL ERECTED	1/16"	1/16"
TOTAL	2 15/16"	3 7/16"

BUTTERNUT INTERCHANGE TO COLLAMER F.A.I. 481

BRIDGE No. 1 - NORTHBOUND
I 481 OVER S.H. 555
N.B. SUPERSTRUCTURE

DRAWING NO.	SCALE	DATE	SHEET NO.
7504-02	As shown	8/15/70	175

LOCKWOOD, KESSLER & BARTLETT, INC.
CONSULTING ENGINEERS — SYOSSET, NEW YORK

FED. RD. REG. NO.	STATE	FEDERAL AID PROJECT NO.
1	NEW YORK	I-690-3(28) I-481-2(16)

INTERSTATE ROUTE CONNEC
BUTTERNUT INTERCHANGE (
BUTTERNUT INTERCHANGE-C

ONONDAGA COUNTY

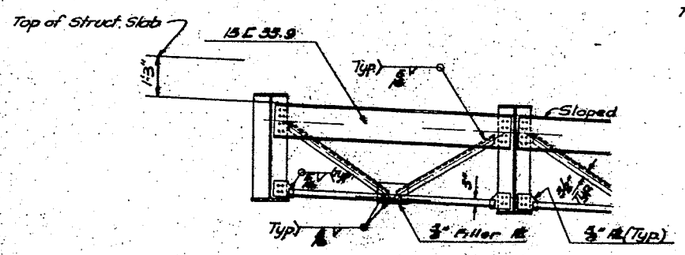

D1 ABUTMENTS
(Curved or Straight Girders)

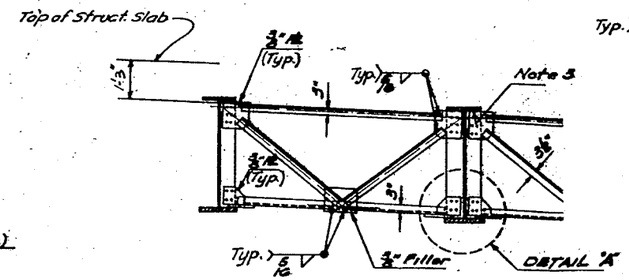

D2C INTERMEDIATE
(Curved Girders)

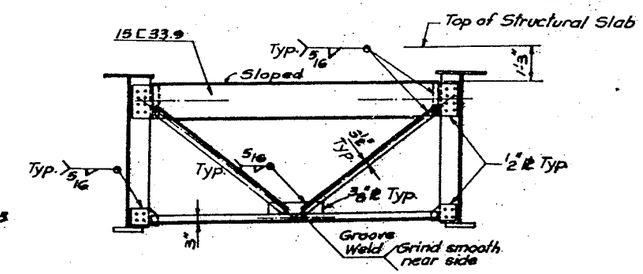

D1S - ABUTMENTS
(Curved Girders)
BRIDGES No. 4 & 9.

MATERIAL THICKNESS OF THICKER PART JOINED (INCHES)	MINIMUM SIZE OF FILLET WELD (INCHES)
To 1/2	5/16
Over 1/2 to 2 1/4	3/8
Over 2 1/4 to 6	1/2

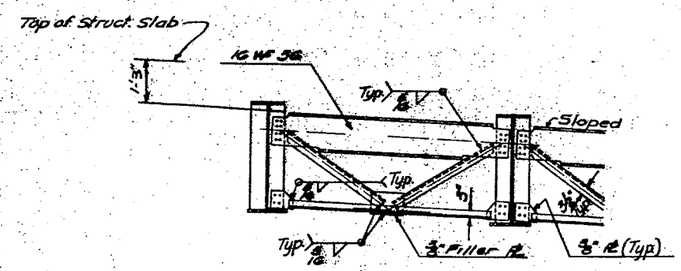

D3-PIERS
(Straight Girders)

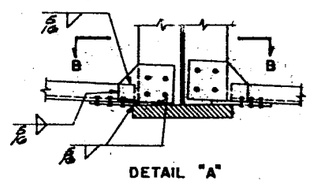

DETAIL "A"

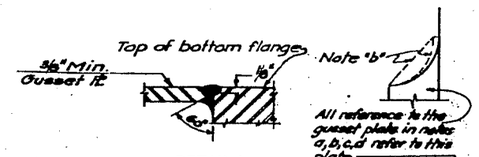

DETAIL 1

DETAIL 2

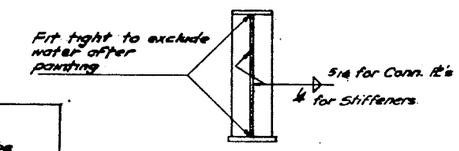

STIFFENER OR CONNECTION PL'S IN PAIR (See Superstructure Note No. 8 Sheet No. 124)

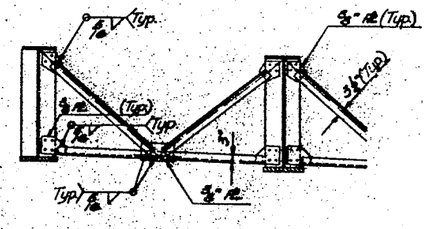

D2S INTERMEDIATE
(Straight Girders)

DIAPHRAGM DETAILS

NOTE:
All bracing angles
$3\frac{1}{2} \times 3 \times \frac{3}{8}$

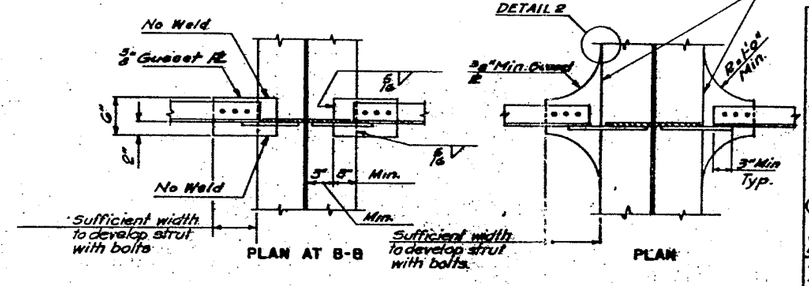

ALTERNATE METHOD FOR CONNECTING BOTTOM BRACING

Notes:

(a) The gusset Pl. shall be fitted and welded as a single bevel groove weld as shown in detail 1. It shall then be air carbon-arc gouged from the ground side into sound weld metal and then welded as detailed. All welding shall be in the flat or down-hand position. See note "Curved Girders" on this sheet.

(b) The gusset Pl. may be of any shape that will provide ease of welding, cutting and finish grinding smooth transition from the flange edge at a min. radius of 6 inches.

(c) Both the gusset Pl. and flange are to be the same type of steel.

(d) Field welding to the gusset Pl. will not be permitted.

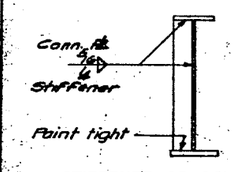

STIFFENER OR CONNECTION PL'S USE SINGLY (See Superstructure Note No. 9 Sheet No. 124)

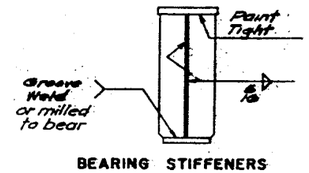

BEARING STIFFENERS CONNECTION PL'S

FABRICATION NOTES

1. A. Spans which use built-up girders and are on a curvature of 1500 feet radius or greater shall use the following note: "Built-up girders may be curved by cutting the flanges to the required radius or by the process of heat shrinking. Built-up girders curved by heat shrinking after they are assembled shall not have the intermediate stiffeners and connection plates welded to the compression flange until the curving process has been completed".

   B. Spans which use built-up girders and are on a curvature of less than 1500 feet radius shall use the following note: "All built-up girders shall be curved by cutting the flanges to the required radius".

2. All connection plates for diaphragms shall be 7" x 7/16" plate except as otherwise indicated. These plates shall be attached to webs with continuous welds so as to develop their full strength as per Specifications of the American Welding Society. Where holes are indicated on the Drawings these connections shall be made with 7/8" diameter rivets or high strength bolts. Holes may be omitted and welding substituted if the Contractor so elects. Amount of welding used shall be equivalent in strength to the rivets or bolts.

3. On curved stringers, the connection plates for diaphragms shall be welded to the top flange by a 7/16 chag weld all around.

CURVED GIRDERS

Stiffener or connection plate to be attached to web after the gusset plate is welded to the flange.

Care shall be taken that the temperature is in the range of [illegible] of the steel at the time of welding [illegible] to insure [illegible] of the steel. [illegible] to be welded shall be preheated to a min. of [illegible]

CONNECTION AND STIFFENER PLATES-COMMON DETAILS

Note: The details on this sheet apply to only the following structures:
Butternut Interchange:
Bridges: 4, 5, 6, 7
Butternut Interchange to Callamer:
Bridges: 1N & 1S
3N & 3S
4N & 4S
5

THIS SHEET DOES NOT APPLY TO BRID

BUTTERNUT INTERCH
F.A.I. 690 & F.A.I. 4

DETAILS- SHEET 5

Revised | Date | Mark | Description

[illegible] & BARTH
CONSULTING ENGINEERS - SYRACUSE

BIN 1093562

D251436

FED. ROAD REG. NO.	STATE	FEDERAL AID PROJECT NO.	SHEET NO.	TOTAL SHEETS
1	N.Y.	1R-431-(17)7 BH1-481-(17)6	35	66

INTERSTATE ROUTE CONNECTION 570
BUTTERNUT INTERCHANGE - PHASE 2
BUTTERNUT INTERCHANGE TO COLLAMER,
SH 70-7 ONONDAGA COUNTY

✓ R. Engle (TC) 4/9/98
✓ R. Engle (TC) 3-27-00
✓ B Opeka 4/5/02
✓ B Opeka 4/12/04
✓ Mary Cole 05/09/06
✓ Mary Cole 05/09/08 - Douglas R Phillips 3/14/90
3/28/94
Peter Kellman 3/29/90

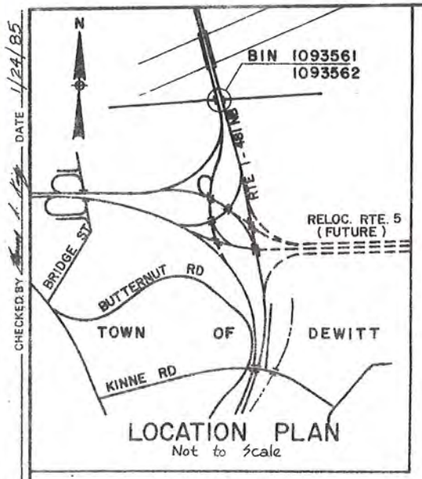

LOCATION PLAN
Not to Scale

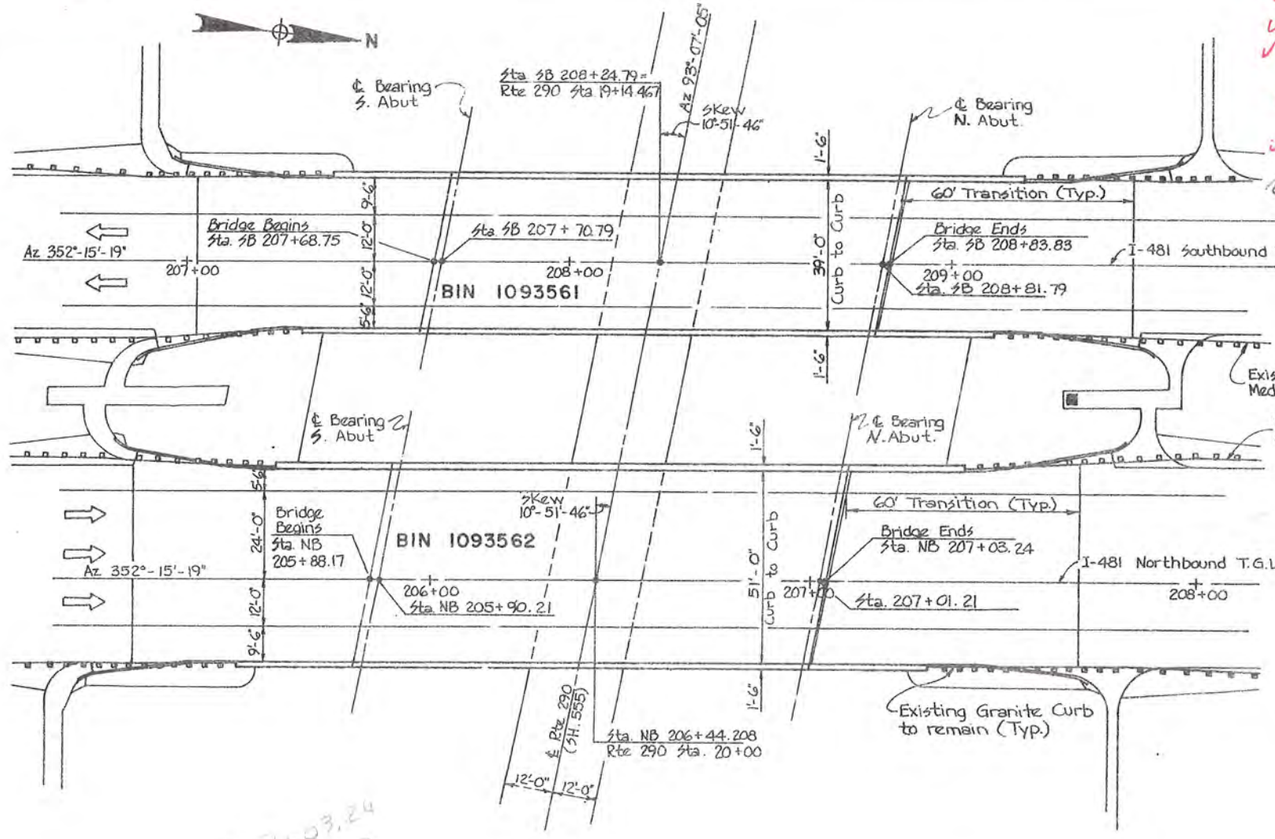

PLAN
Scale : 1" = 20'

PROPOSED JOINTS
(Typical Both Bridges)
South Abutment - Armoring Angle at End of Deck - Item 564.510001, SEE DWG JD-1
North Abutment - Type A5 Armored Joint with Compression Seal - SEE DWG JD-2
Item 567.35 with Armoring Angle at End of Header - Item 564.510001. SEE DWG JD-1

Item 18490.4031 Cold Milling, Shaping & Removal of Bituminous Pavement (Typ.)

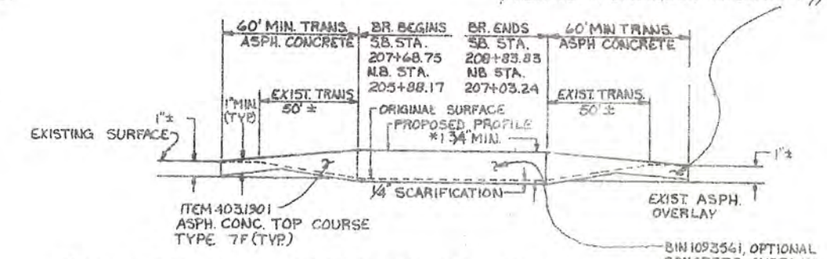

* See note #5, Dwg SN-1

PROPOSED PROFILE
NOT TO SCALE

207+03.24
- 205+88.17
1+15.07

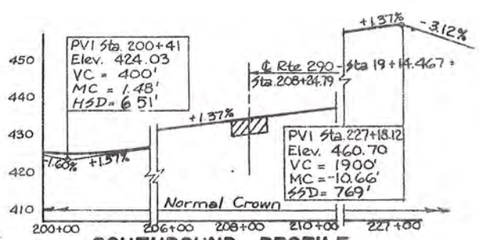

SOUTHBOUND PROFILE
Scale: Horiz. 1" = 200' Vert. 1" = 20'

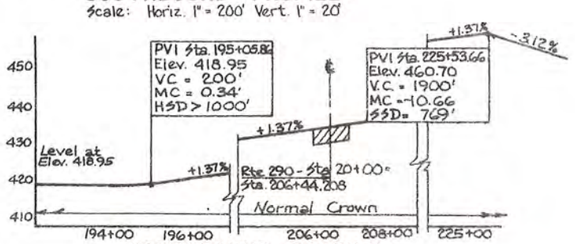

NORTHBOUND PROFILE
Scale: Horiz. 1" = 200' Vert. 1" = 20'

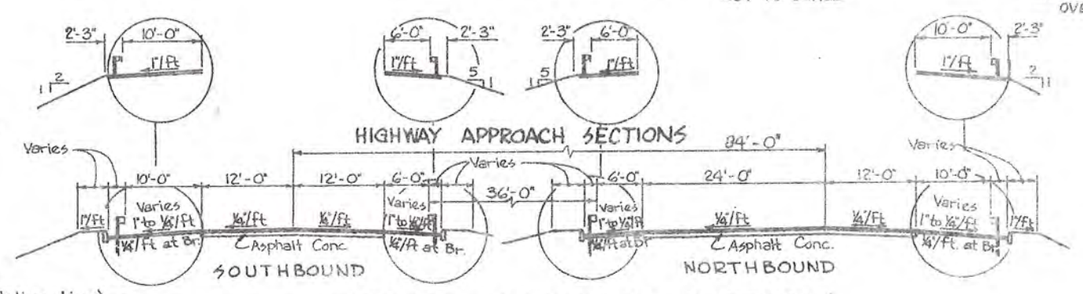

TYPICAL APPROACH SECTION
Scale: 1" = 10'

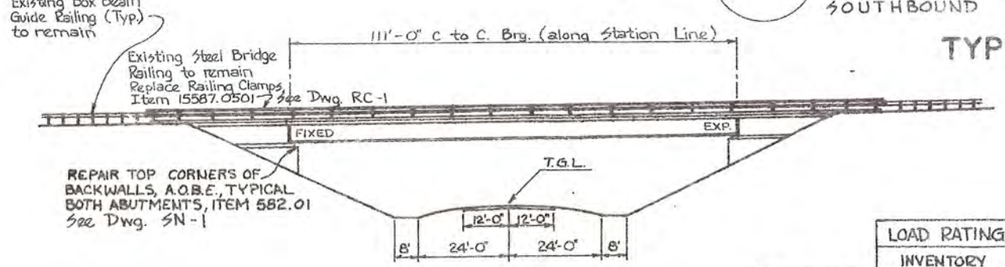

ELEVATION
Scale: 1" = 20'

	LOAD RATING	H.S. LOADING
	INVENTORY	OPERATING
BIN 1093561	HS 20.7 (37.29T) W.S.*	H.S. 39.4 (70.93T) W.S.*
BIN 1093562	HS 20.0 (35.91T) W.S.*	H.S. 38.0 (68.32T) W.S.*

* W.S. = Working Stress

AS - BUILT REVISIONS

SIGNATURE DATE

BIN 1093561 AND 1093562
I - 481 SB AND NB OVER RTE. 290

STATE OF NEW YORK
DEPARTMENT OF TRANSPORTATION

DRAWING No.	SCALE	DATE	REGION	SHEET NO.
BD-6	As shown		3	35

DATE 1/24/85 CHECKED BY DRAFTED BY CHECKED BY ESTIMATED BY CHECKED BY DESIGNED BY IN CHARGE OF

D251436

FED. ROAD REG. NO.	STATE	FEDERAL AID PROJECT NO.	SHEET NO.	TOT SHE
1	N.Y.	IR-431-(174) BH1-481-(174)	36	6

INTERSTATE ROUTE CONNECTION 570
BUTTERNUT INTERCHANGE - PHASE 2
BUTTERNUT INTERCHANGE TO COLLAMER,
SH 70-7 ONONDAGA COUNTY

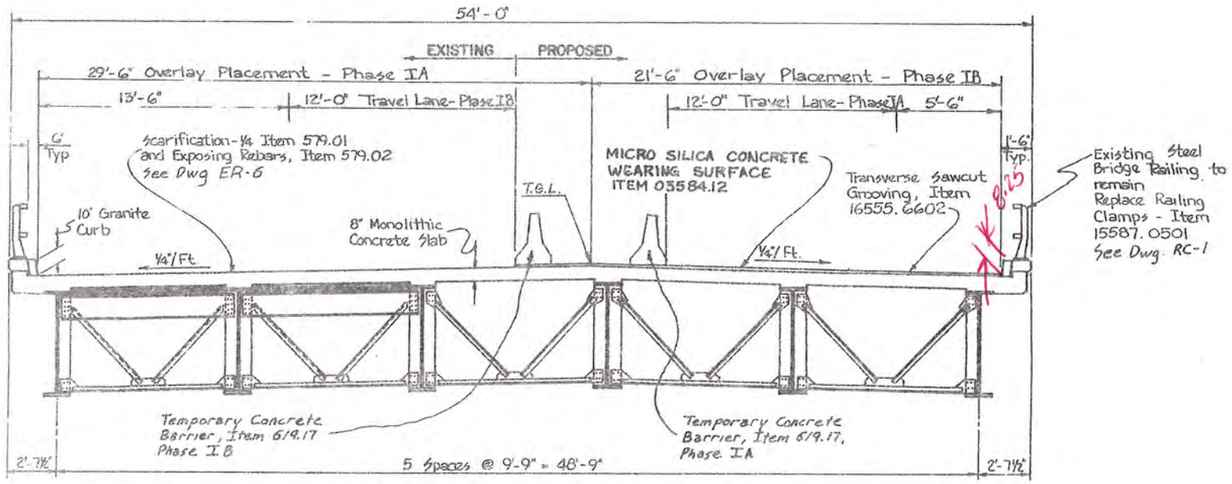

TYPICAL BRIDGE SECTION
(Northbound)
Looking North
Scale: ¼" = 1'-0"

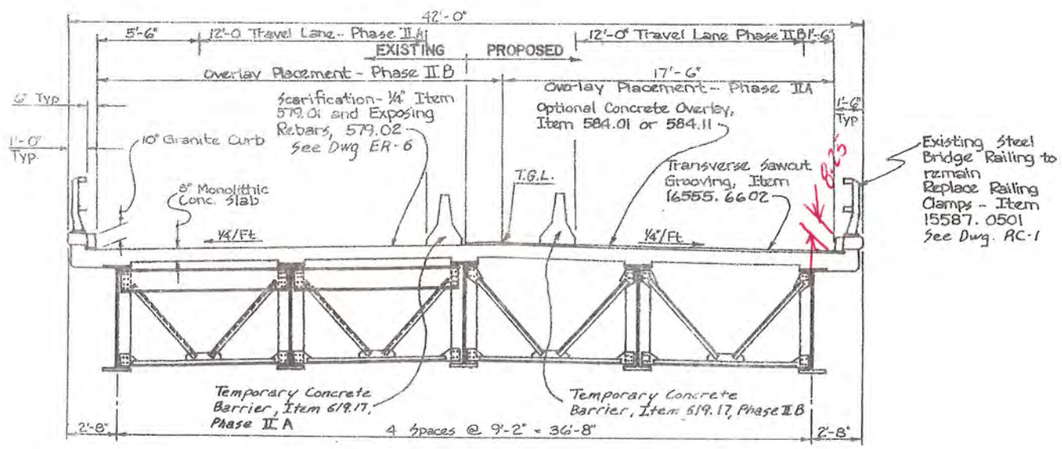

TYPICAL BRIDGE SECTION
(Southbound)
Looking North
Scale: ¼" = 1'-0"

AS - BUILT REVISIONS

SIGNATURE DATE

BIN 1093561 AND 1093562
I - 481 SB AND NB OVER RTE. 290

D251436

FED. ROAD REG. NO.	STATE	FEDERAL AID PROJECT NO.	SHEET NO.	TO SHEET
1	N.Y.	IM-481-(139) IM1-481-(139)	57	6[illegible]

INTERSTATE ROUTE CONNECTION 570
BUTTERNUT INTERCHANGE - PHASE 2
BUTTERNUT INTERCHANGE TO COLLAMER,
SH 70-7 ONONDAGA COUNTY

N

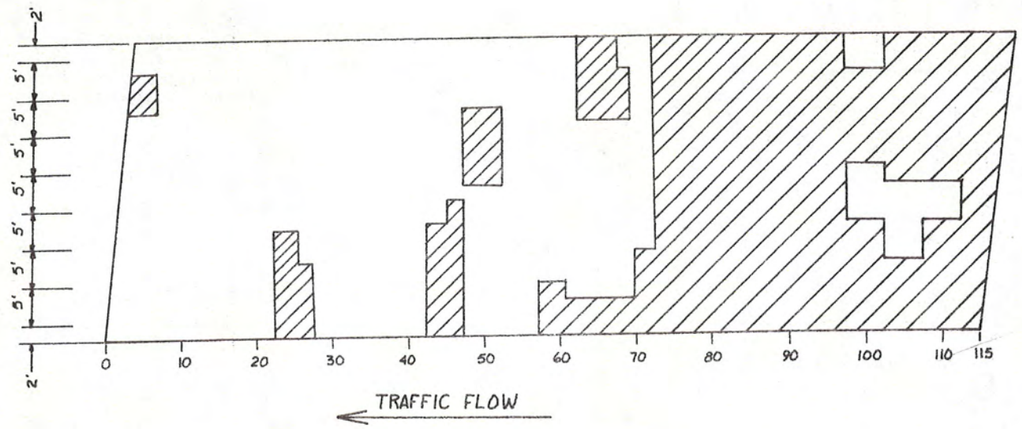

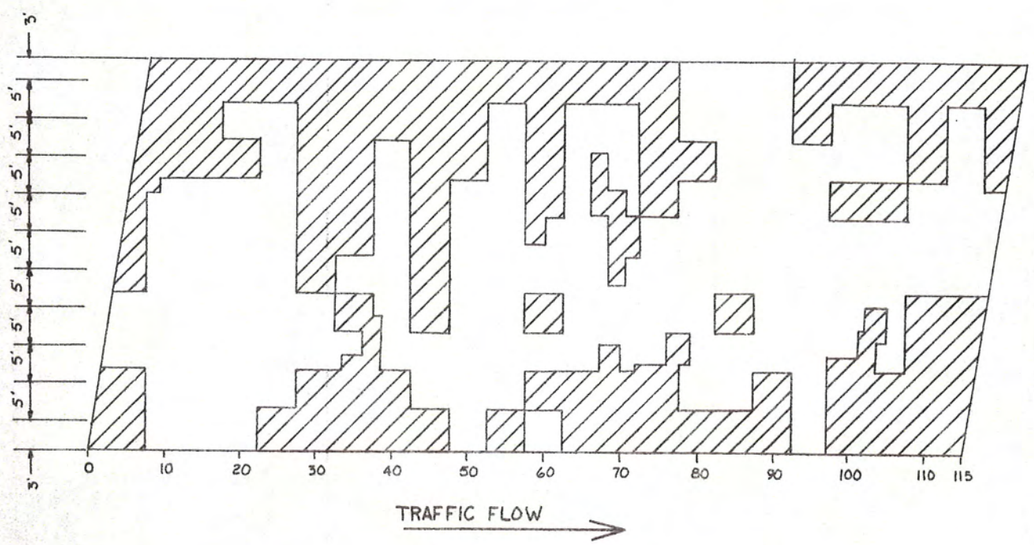

Approximate Area for Exposing Reinforcing Bars, Item 579.02

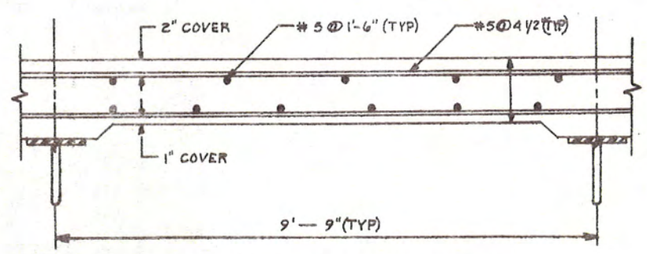

TOP BAR REINFORCEMENT
NOT TO SCALE

AS - BUILT REVISIONS

SIGNATURE DATE

BINS 1093561 & 2
I-481 SB OVER RTE. 290, I-481 NB OVER RT

STATE OF NEW YORK
DEPARTMENT OF TRANSPORTATION

DRAWING No.	SCALE	DATE	REGION	SHEET
FD-6			3	57

DATE 1/28/85 CHECKED BY DRAFTED BY CHECKED BY ESTIMATED BY DESIGNED BY CHECKED BY CHARGE OF 47-2 (5/76)

3/3 1093562

D259214

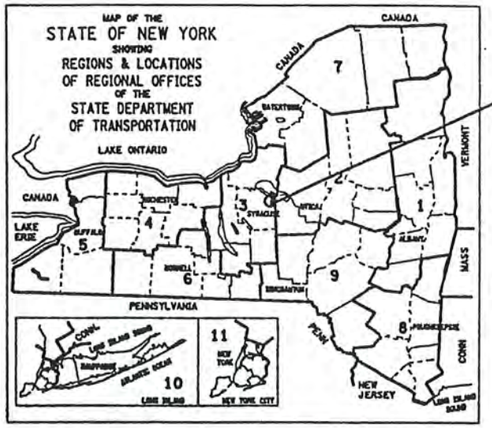

THIS IS A BRIDGE REHABILITATION PROJECT ON VARIOUS BRIDGES ON INTERSTATE 481, LOCATED IN THE TOWNS OF CICERO AND DEWITT IN ONONDAGA COUNTY. THIS WORK CONSISTS OF BRIDGE JOINTS, BEARINGS, BRIDGE RAIL AND CONCRETE REPAIR OF SUBSTRUCTURES. THERE ARE 28 BRIDGES IN THE PROJECT BEGINNING AT REFERENCE MARKER 481I-3301-1000 SOUTH OF THE CITY OF SYRACUSE AND ENDING AT REFERENCE MARKER 481I-3301-2143. I481 INTERCHANGE NORTH OF THE CITY.

STATE OF NEW YORK
DEPARTMENT OF TRANSPORTATION
OFFICE OF ENGINEERING

BRIDGE REHABILITATION PROJECT (ELEMENT SPECIFIC)
VARIOUS BRIDGES ON INTERSTATE 481
TOWNS OF DEWITT AND CICERO

VOLUME 1 OF 2

432 SHEETS ONONDAGA COUNTY CONTRACT D259214

F.A. PROJECT

STANDARD SHEETS

M203-4, M203-5, M203-6R1, M603-1
M606-32, M606-33, M606-34,
M619-3R1, M619-4, M619-5
M685-1, M685-2R1, M685-3R1
M685-4R1, M685-5R1, M403-1, M203-4,
M203-5, M203-6R1, M603-1

V Bupella 4/14/04
A Cook - 05/09/06 - work done & rec'd.
A Cook 5/9/08
Renee Spallek 4/29/10

ALL WORK CONTEMPLATED UNDER THIS CONTRACT IS TO BE COVERED BY AND IN CONFORMITY WITH THE STANDARD SPECIFICATIONS (METRIC UNITS) OF JANUARY 2, 2002, AS AMENDED BY ADDENDA NOS. 1 AND 2, EXCEPT AS MODIFIED ON THESE PLANS AND IN THE ITEMIZED PROPOSAL.

CONTRACTOR'S NAME _____
AWARD DATE _____
COMPLETION DATE _____
FINAL ACCEPTANCE DATE _____
REGIONAL DIRECTOR _____
ENGINEER IN CHARGE _____
FINAL COST TOTAL _____

FISCAL SHARE COST(S)

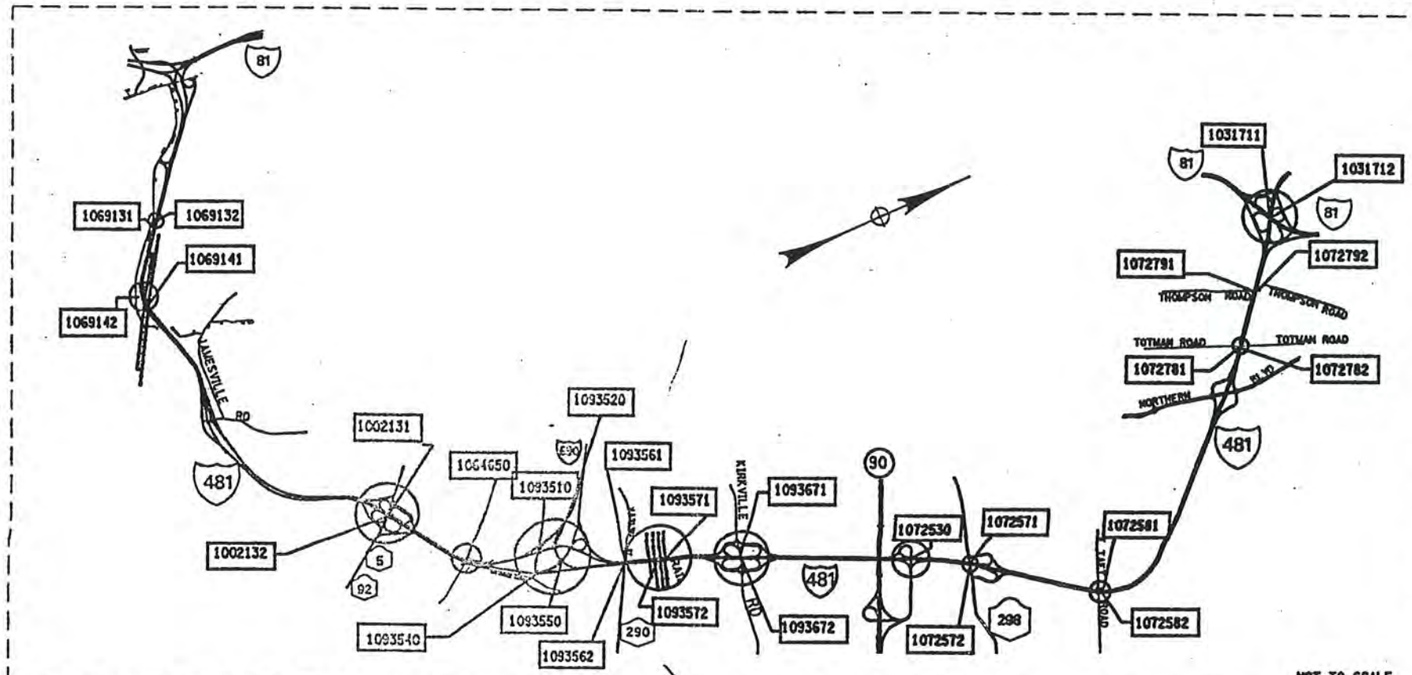

PROJECT LOCATION

BRIDGE REHAB. PROJ.- ELEMENT SPECIFIC			
VARIOUS BRIDGES ON INTERSTATE 481			
TOWNS OF DEWITT AND CICERO			
ONONDAGA COUNTY			
FED. ROAD REG. NO.	STATE	SHEET NO.	TOTAL SHEETS
1	N.Y.	1	432
FEDERAL AID PROJECT NO.			
CAPITAL PROJECT IDENTIFICATION NO. 3056.13			
INDEX ON SHEET NO. 5 & 6			

RECOMMENDED BY John E. Fritz 9/04/02
REGIONAL DESIGN ENGINEER DATE

RECOMMENDED BY Myron A. Quigley 9/4/02
REGIONAL CONSTRUCTION ENGINEER DATE

RECOMMENDED BY 9/04/02
REGIONAL TRANSPORTATION MAINTENANCE ENGINEER DATE

RECOMMENDED BY 9-4-02
REGIONAL TRAFFIC ENGINEER DATE

APPROVED BY 09-09-02
REGIONAL DIRECTOR DATE

DESIGN SUPERVISOR Clement S. JOB MANAGER Nick DeCice DESIGNED BY ESTIMATED BY DRAFTED BY CHECKED BY

FED ROAD REG. NO.	STATE	CONTRACT NO.	SHEET NO.	TOTAL SHEETS
1	N.Y.	D259214	5	432

BRIDGE REHABILITATION PROJECT (ELEMENT SPECIFIC)
VARIOUS BRIDGES ON INTERSTATE 481
TOWNS OF DEWITT AND CICERO
ONONDAGA COUNTY
P.I.N. 305613 B.I.N. ALL BINS

INDEX

SHEET NO.	DESCRIPTION	DRAWING NO.
1	TITLE SHEET	COVER
2,3,4	ESTIMATE OF QUANTITIES	
5,6	INDEX	IDX-1 - IDX-2
7-155	MAINTENANCE AND PROTECTION OF TRAFFIC	MPT-1 - MPT-149
156	CROSSOVER TYPICAL SECTION	CTS-1
157-160	CROSSOVER SURVEY CONTROL DATA	HC-1 - HC-4
161-166	CROSSOVER PLANS	CPL-1 - CPL-6
167-174	CROSSOVER PROFILES	CPR-1 - CPR-8
175-177	CROSSOVER MISC. DETAILS	CMD-1 - CMD-3
178-179	CROSSOVER MISC. TABLES	CMT-1 - CMT-2
180-191	ESTIMATE OF QUANTITIES BY STRUCTURE	QE-1A - QE-4C
192	GENERAL NOTES	GN-1
193	BIN 1002131, I481SB/RT. 5, PLAN AND ELEVATION	GP1-1
194	BIN 1002131, TYPICAL BRIDGE SECTION AND PROFILE	TS1-1
195-197	BIN 1002131, SOUTH ABUTMENT (SB)	AB1-1 - AB1-3
198-199	BIN 1002131, NORTH ABUTMENT (SB), SHEET PILING LAYOUT	AB1-4 - AB1-5
200-201	BIN 1002131 PIER 1 & PIER 2 SB REMOVAL DETAILS	PR1-1 & PR1-2
202	BIN 1002131, PEDESTAL REPLACEMENT	PR1-3
203	BIN 1002131, BOLSTER DETAILS	PR1-4
204	BIN 1002131, ANCHOR BOLT LAYOUT (SB)	PR1-5
205	BIN 1002132, I481NB/RT. 5, PLAN AND ELEVATION	GP2-1
206-207	BIN 1002132, TYPICAL BRIDGE SECTION AND PROFILE, APPROACH SECTION	TS2-1 & TS2-2
208-213	BIN 1002132, SOUTH ABUTMENT (NB)	AB2-1 - AB2-6
214-219	BIN 1002132, NORTH ABUTMENT (NB)	AB2-7 - AB2-12
220-221	BIN 1002132, PIERS (NB)	PR2-1 & PR2-2
222	BIN 1002132, PEDESTAL REPLACEMENT (NB)	PR2-3
223	BIN 1002132, BOLSTER DETAILS (NB)	PR2-4
224	BIN 1002132, ANCHOR BOLT LAYOUT (NB)	PR2-5
225	BIN 1031711 AND 1031712, I-481/I-81, PLAN AND ELEVATION	GP3-1
226	BIN 1031711 & 1031712, TYPICAL BRIDGE SECTION AND PROFILE	TS3-1
227	BIN 1031711, EAST ABUTMENT (SB) PLAN & ELEVATION	AB3-1
228	BIN 1031711, WEST ABUTMENT (SB) PLAN & ELEVATION	AB3-2
229	BIN 1031712, EAST ABUTMENT (NB) PLAN & ELEVATION	AB3-3
230	BIN 1031712, WEST ABUTMENT (NB) PLAN & ELEVATION	AB3-4
231	BIN 1031711 & 1031712, APPROACH SLABS	AS3-1
232	BIN 1064650, KINNE RD/I-481, PLAN, ELEVATION, AND BRIDGE SECTION	GP4-1
233	BIN 1069131 & 1069132, I-481/QUARRY DRIVEWAY, PLAN AND ELEVATION	GP5-1
234	BIN 1069131 & 1069132, TYPICAL BRIDGE SECTION AND PROFILE AND BRIDGE SECTION	TS5-1
235	BIN 1069131, WEST ABUTMENT (SB) PLAN & ELEVATION	AB5-1
236	BIN 1069131, EAST ABUTMENT (SB) PLAN & ELEVATION	AB5-2
237	BIN 1069132, EAST ABUTMENT (NB) PLAN & ELEVATION	AB5-3
238-239	BIN 1069141 & 1069142, I-481/NYS + W RAILROAD, GENERAL PLAN AND ELEVATION	GP6-1 - GP6-2
240-241	BIN 1069141 & 1069142, TYPICAL BRIDGE SECTION AND PROFILES	TS6-1 & TS6-2
242	BIN 1069141, WEST ABUTMENT (SB) PLAN & ELEVATION	AB6-1
243	BIN 1069141, EAST ABUTMENT (SB) PLAN & ELEVATION	AB6-2
244	BIN 1069142, WEST ABUTMENT (NB) PLAN & ELEVATION	AB6-3
245	BIN 1069142, EAST ABUTMENT (NB) PLAN & ELEVATION	AB6-4

INDEX (CONTINUED)

SHEET NO.	DESCRIPTION	DRAWING NO.
246	BIN 1072530, RAMP TO I-481/I-481, PLAN, ELEVATION AND BRIDGE SECTION	GP7-1
247-248	BIN 1072530, EAST ABUTMENT	AB7-1 - AB7-2
249	BIN 1072571 & BIN 1072572, I-481/ROUTE 298 PLAN AND ELEVATION AND BRIDGE SECTION	GP8-1
250	BIN 1072571 & BIN 1072572, TYPICAL BRIDGE SECTION AND PROFILE	TS8-1
251	BIN 1072571, SOUTH ABUTMENT (SB) PLAN & ELEVATION	AB8-1
252	BIN 1072571, NORTH ABUTMENT (SB) PLAN & ELEVATION	AB8-2
253	BIN 1072572, SOUTH ABUTMENT (NB) PLAN & ELEVATION	AB8-3
254	BIN 1072581 & BIN 1072582, I-481/TAFT ROAD, PLAN AND ELEVATION	GP9-1
255	BIN 1072581 & 1072582, TYPICAL BRIDGE SECTION AND PROFILE	TS9-1
256-257	BIN 1072581, SOUTH ABUTMENT AND NORTH ABUTMENT (SB)	AB9-1 & AB9-2
258-259	BIN 1072582, SOUTH ABUTMENT AND NORTH ABUTMENT (NB)	AB9-3 & AB9-4
260	BIN 1072781 & BIN 1072782, I-481/TOTMAN ROAD, PLAN, ELEVATION AND BRIDGE SECTION	GP10-1
261	BIN 1072781 & BIN 1072782 TYPICAL BRIDGE SECTION AND PROFILE	TS10-1
262-263	BIN 1072781, EAST ABUTMENT (SB) PLAN & ELEVATION	AB10-1 & AB10-2
264	BIN 1072782, WEST ABUTMENT (NB) PLAN & ELEVATION	AB10-3
265	BIN 1072781, APPROACH SLABS	AS10-1
266	BIN 1072791 & BIN 1072792, I-481/ THOMPSON ROAD, PLAN, ELEVATION AND BRIDGE SECTION	GP11-1
267	BIN 1072791 & BIN 1072792 TYPICAL BRIDGE SECTIONS AND PROFILE	TS11-1
268	BIN 1072791, EAST & WEST ABUTMENTS (SB)	AB11-1
269	BIN 1072791, APPROACH SLAB (SB)	AS11-1
270	BIN 1093510, I-690 RAMP/ I-481SB, PLAN, ELEVATION, AND BRIDGE SECTION	GP12-1
271	BIN 1093510, WEST ABUTMENT PLAN & ELEVATION	AB12-1
272	BIN 1093520, WN LINE OVER INTERSTATE 481 SB, PLAN, ELEVATION, AND BRIDGE SECTION	GP13-1
273	BIN 1093520, WEST ABUTMENT PLAN & ELEVATION	AB13-1
274	BIN 1093540, I-690 EB/ I-481 NB RAMP, PLAN, ELEVATION, AND BRIDGE SECTION	GP14-1
275	BIN 1093540 TYPICAL BRIDGE SECTION AND PROFILE	TS14-1
276	BIN 1093540, WEST ABUTMENT	AB14-1
277	BIN 1093550, I-481 NB/WB CONNECTOR, PLAN, ELEVATION, AND BRIDGE SECTION	GP15-1
278	BIN 1093550, SOUTH ABUTMENT, NB PLAN & ELEVATION	AB15-1
279	BIN 1093550, NORTH ABUTMENT, NB PLAN & ELEVATION	AB15-2
280	BIN 1093561 & 1093562, I-481/ROUTE 290, PLAN, ELEVATION AND BRIDGE SECTION	GP16-1
281	BIN 1093561 & 1093562 TYPICAL BRIDGE SECTION AND PROFILE	TS16-1
282	BIN 1093561, SOUTH ABUTMENT (SB) PLAN & ELEVATION	AB16-1
283	BIN 1093562, SOUTH ABUTMENT (NB) PLAN & ELEVATION	AB16-2
284-287	BIN 1093571 & BIN 1093572, I-481/CSX RAILROAD YARD, PLAN & ELEVATION	GP17-1 - GP17-4
288	BIN 1093571 AND BIN 1093572, TYPICAL BRIDGE SECTION AND PROFILES	TS17-1
289-293	BIN 1093571 AND BIN 1093672, DRAINAGE DETAILS	DD17-1 - DD17-5
294-296	BIN 1093571 AND BIN 1093672, SCUPPER EXTENSIONS	DD17-6 - DD17-8
297-314	BIN 1093571, PIERS 1-14, (SB)	PR17-1S - PR17-18S
315	BIN 1093572, SOUTH ABUTMENT (NB)	AB17-1
316-329	BIN 1093572, PIERS 1-14 (NB)	PR17-1N - PR17-14N
330-331	BIN 1093571 AND 1093572, PARAPET REPAIR DETAILS	PW17-1 & PW17-2
332	BIN 1093572, BRIDGE DECK REPAIRS	DR17-1

ALL DIMENSIONS ARE IN m UNLESS OTHERWISE NOTED

AS BUILT REVISIONS

SIGNATURE DATE

INTERSTATE 481
REHABILITATION PROJECT

INDEX

STATE OF NEW YORK
DEPARTMENT OF TRANSPORTATION

FILENAME	REGION	DATE	DRAWING NO.
305613AA.L2A	3	10/02	IDX-1

DESIGN REVISIONS DESIGNED BY ESTIMATED BY DRAFTED BY CHECKED BY CHECKED BY

FED ROAD REG. NO.	STATE	CONTRACT NO.	SHEET NO.	TOTAL SHEETS
1	N.Y.	D259214	6	432

BRIDGE REHABILITATION PROJECT (ELEMENT SPECIFIC)
VARIOUS BRIDGE ON INTERSTATE 481
TOWN OF DEWITT AND CICERO
ONONDAGA COUNTY
P.I.N. 305613 B.I.N. VARIOUS

INDEX (CONTINUED)

SHEET NO.	DESCRIPTION	DRAWING NO.
333	BIN 1093671 & 1093672, I-481/KIRKVILLE ROAD, PLAN, ELEVATION AND BRIDGE SECTION	GP18-1
334	BIN 1093671 & BIN 1093672 TYPICAL BRIDGE SECTION AND PROFILE	TS18-1
335-336	BIN 1093671, SOUTH ABUTMENT (SB) PLAN, ELEVATION AND SECTIONS	AB18-1 - AB18-2
337	BIN 1093671, NORTH ABUTMENT (SB) PLAN & ELEVATION	AB18-3
338-339	BIN 1093672, SOUTH ABUTMENT (NB) PLAN, ELEVATION AND SECTIONS	AB18-4 - AB18-5
340	BIN 1093672, NORTH ABUTMENT (NB) PLAN & ELEVATION	AB18-6
341-342	BIN 1002131, BIN 1002132 & BIN 1093571, MULTIROTATIONAL BEARINGS	BR-1 & BR-2
343	BIN 1002131, BEARING RESTORATION DETAILS	BR-3
344	BINS 1069131 & 1069132, BEARING RESTORATION DETAILS	BR-4
345-346	BIN 1069141 & BIN 1069142, BEARING RESTORATION DETAIL	BR-5 & BR-6
347	BIN 1072530, BEARING RESTORATION DETAILS	BR-7
348	BIN 1072791 AND BIN 1072792 BEARING RESTORATION DETAILS	BR-8
349	BIN 1093550, BEARING RESTORATION DETAILS	BR-9
350-351	BINS 1093751 & 1093572, BEARING RESTORATION DETAILS	BR-10 & BR-11
352	BIN 1072781 BEARING RESTORATION DETAILS	BR-12
	RAILING DETAILS	
353-355	BIN 1002131 & BIN 1002132, RAILING DETAILS	RD-1 - RD-3
356-358	BIN 1069141 & BIN 1069142, RAILING DETAILS	RD-4 - RD-6
359-360	RAILING DETAILS	RD-7 - RD-8
	BRIDGE JOINTS	
361-364	BRIDGE JOINT TABLE	JT-1 - JT-4
365	COMPRESSION SEAL JOINT DETAIL (ALL BRIDGES)	JD-1
366-370	BIN 1002131, JOINT DETAILS	JD-2 - JD-6
371-375	BIN 1002132, JOINT DETAILS	JD-7 - JD-11
376-377	BIN 1031711 & BIN 1031712, JOINT DETAILS	JD-12 - JD-13
378-383	BIN 1064650, JOINT DETAILS	JD-14 - JD-19
384-385	BIN 1069131, JOINT DETAILS	JD-20 + JD-21
386-387	BIN 1069132, JOINT DETAILS	JD-22 + JD-23
388-392	BIN 1069141 & BIN 1069142	JD-24 - JD-28
393-394	BIN 1072530, JOINT DETAILS	JD-29 + JD-30
395-396	BIN 1072571, JOINT DETAILS	JD-31 + JD-32
397-398	BIN 1072572, JOINT DETAILS	JD-33 + JD-34
399-400	BIN 1072581, JOINT DETAILS	JD-35 + JD-36
401-402	BIN 1072582, JOINT DETAILS	JD-37 + JD-38
403-404	BIN 1072781, JOINT DETAILS	JD-39 + JD-40
405-406	BIN 1072782, JOINT DETAILS	JD-41 + JD-42
407-408	BIN 1072792, JOINT DETAILS	JD-43 + JD-44
409-410	BIN 1093510, JOINT DETAILS	JD-45 + JD-46
411	BIN 1072791, BIN 1093520 & BIN 1093540, JOINT DETAILS	JD-47
412-413	BIN 1093550, JOINT DETAILS	JD-48 + JD-49
414-416	BIN 1093561 & BIN 1093562, JOINT DETAILS	JD-50 - JD-52
417-420	BIN 1093571 & BIN 1093572, JOINT DETAILS	JD-53 - JD-56
421-423	BIN 1093671 & BIN 1093672, JOINT DETAILS	JF-57 - JD-59

INDEX (CONTINUED)

SHEET NO.	DESCRIPTION	DRAWING NO.
424	VARIOUS BRIDGES - ROAD PLATE DETAIL	AA - RP1
	BAR LIST	
425-428	ALL BINS (BRIDGE JOINT SYSTEMS)	BL-1 - BL-4
429	BIN 1002131 & 1002132	BL-5
430	BIN 1093571	BL-6
431	STRUCTURAL SLAB OVERLAY & ASPHALT PAVEMENT REPAIR DETAILS	MS-1
432	MISC. TABLE	MT-1

ALL DIMENSIONS ARE IN m UNLESS OTHERWISE NOTED

AS BUILT REVISIONS

SIGNATURE DATE

INTERSTATE 481
REHABILITATION PROJECT

INDEX

STATE OF NEW YORK
DEPARTMENT OF TRANSPORTATION

FILENAME	REGION	DATE	DRAWING NO.
305613AA.L2A	3	10/02	IDX-2

CHECKED BY ____ DRAFTED BY ____ ESTIMATED BY ____ CHECKED BY ____

FED ROAD REG. NO.	STATE	CONTRACT NO.	SHEET NO.	TOTAL SHEETS
1	N.Y.	D259214	189	432

BRIDGE REHABILITATION PROJECT (ELEMENT SPECIFIC)
VARIOUS BRIDGES ON INTERSTATE 481
TOWNS OF DEWITT AND CICERO
ONONDAGA COUNTY
P.I.N. 305613 B.I.N. VARIOUS

ESTIMATE OF QUANTITIES BY STRUCTURE

ITEM #	DESCRIPTION	UNIT	1093550		1093561		1093562		1093571		1093572		1093671		1093672	
			EST.	FINAL	EST.	FINAL	EST.	FINAL	EST.	FINAL	EST.	FINAL	EST.	FINAL	EST.	FINAL
203.02 M	UNCLASSIFIED EXCAVATION & DISPOSAL	CM	—		—		—		—		—		—		—	
203.03 M	EMBANKMENT IN PLACE	CM	—		—		—		—		7		—		—	
203.07 M	SELECT GRANULAR FILL	CM	—		—		—		4		10		—		—	
203.1770 M	CLEAN EXISTING PIPE CULVERT	M	—		—		—		4		4		—		—	
203.18 M	CLEANING CLOSED DRAINAGE SYSTEMS	M	34		—		—		256		269		—		—	
203.19 M	CLEAN DRAINAGE STRUCTURES AND MANHOLES	EA	—		—		—		4		6		—		—	
203.21 M	SELECT STRUCTURE FILL	CM	—		—		—		—		—		—		—	
15203.51 M	GRADING, CLEANING AND RESHAPING EXISTING DITCHES	M	—		—		—		70		77		—		—	
206.01 M	STRUCTURE EXCAVATION	CM	—		—		—		—		—		—		—	
206.02 M	TRENCH AND CULVERT EXCAVATION	CM	—		—		—		24		22		—		—	
207.10 M	GEOTEXTILE BEDDING	SM	—		—		—		32		32		—		—	
210.5433 M	REMOVAL AND DISPOSAL OF ASBESTOS CONTAINING CAULKING (BV 12)	LS	—		—		—		NEC		NEC		—		—	
210.9913 M	REMOVAL AND DISPOSAL OF MISC. ASBESTOS CONTAINING MATERIAL BV-12	LS	NEC		—		—		—		—		—		—	
304.15 M	SUBBASE COURSE, OPTIONAL TYPE	CM	—		—		—		—		2		—		—	
402.128201 M	12.5mm F2 SUPERPAVE HMA, 80 SERIES COMPACTION	MT	6		4		5		3		3		5		5	
402.128211 M	PLANT PRODUCTION QUALITY ADJUSTMENT TO ITEM 402.128201M	QU	1		1		1		1		1		1		1	
402.258901 M	25mm F9 SUPERPAVE HMA, 80 SERIES COMPACTION	MT	10		6		8		5		5		8		8	
402.258911 M	PLANT PRODUCTION QUALITY ADJUSTMENT TO 402.258901M	QU	1		1		1		1		1		1		1	
402.378901 M	37.5mm, F9 SUPERPAVE HMA, 80 SERIES COMPACTION	MT	—		—		—		—		—		—		—	
402.378911 M	PLANT PRODUCTION QUALITY ADJUSTMENT TO 402.378901M	QU	—		—		—		—		—		—		—	
407.01 M	TACK COAT	L	22		13		17		12		12		17		17	
490.30 M	MISC. COLD MILLING OF BITUMINUS CONCRETE	SM	61		37		48		31		31		48		48	
502.92 M	SEALING TRANSVERSE JOINTS	M	—		—		—		—		—		—		—	
08520.5014 M	SAWCUT, ASPH, CONC/ASPH, OVERLAY- PCC PAVE	M	41		25		32		21		21		32		32	
552.13 M	TEMPORARY STEEL SHEETING	SM	—		—		—		—		—		—		—	
555.0105 M	CONCRETE FOR STRUCTURES - CLASS A	CM	—		—		—		1		2		—		—	
555.09 M	CONCRETE FOR STRUCTURES, CLASS HP	CM	2		2		2		88		15		2		2	
18555.81 M	STRUCTURAL CRACK SEALING	LM	—		—		—		—		—		—		—	
556.0201 M	UNCOATED BAR REINFORCEMENT FOR CONCRETE STRUCTURES	KG	—		—		—		1975		—		—		—	
556.0202 M	EPOXY COATED REBAR FOR STRUCTURES	KG	137		109		140		2732		613		145		145	
558.01 M	TRANSVERSE SAWCUT GROOVING OF STR SLAB SURF	SM	—		—		12		—		77		—		—	
18559.1696 M	PROTECTIVE SEALER STRUCTURAL CONCRETE	SM	—		—		—		1027		1031		—		—	
18559.1896 M	PROT SEAL STR. CONC. - NEW BRIDGE DECK OVERLAYS	SM	—		—		12		—		77		—		—	
564.0501 M	STRUCTURAL STEEL	LS	—		—		—		—		—		—		—	
565.1522 M	TYPE M.R. EXPANSION BEARING (1001 TO 2000 KN)	EA	—		—		—		8		—		—		—	
565.1722 M	TYPE M.R. FIXED BEARING (1001 TO 2000 KN)	EA	—		—		—		8		—		—		—	
15565.4302 M	BRIDGE BEARING RESTORATION	EA	12		—		—		32		36		—		—	
566.01 M	MODULAR EXPANSION JOINT SYSTEM, ONE-CELL	M	—		—		—		104		115		—		—	
566.02 M	MODULAR EXPANSION JOINT SYSTEM TWO-CELL	M	—		—		—		—		—		—		—	
567.31 M	ARM JNT SYS WI COMPRESSION SEAL - TY A1	M	—		—		—		—		—		—		—	
567.32 M	ARM JNT SYS WI COMPRESSION SEAL - TY A2	M	—		—		—		—		—		—		—	
567.35 M	ARM JNT SYS WI COMPRESSION SEAL - TY A5	M	—		13		17		—		—		17		17	
567.36 M	ARM JNT SYS WI COMPRESSION SEAL - TY A6	M	—		—		—		—		—		—		—	
18567.46 M	ELASTOMERIC CONCRETE FOR BRIDGE JOINT SYSTEMS	M	—		—		—		31		21		—		—	
16567.640001 M	REPLACE COMPRESSION SEAL IN EXISTING BRIDGE JOINTS	M	—		—		—		—		—		—		—	
568.32 M	CEMENT MORTAR PADS	EA	—		—		—		—		—		—		—	
568.50 M	STEEL BRIDGE RAILING (2 RAIL)	M	—		—		—		—		—		—		—	
570.090001 M	ENVIRONMENTAL GROUND PROTECTION	LS	—		—		—		NEC		—		—		—	
570.090002 M	ENVIRONMENTAL GROUND PROTECTION	LS	—		—		—		—		NEC		—		—	
570.090003 M	ENVIRONMENTAL GROUND PROTECTION	LS	—		—		—		—		—		—		—	

ALL DIMENSIONS ARE IN m UNLESS OTHERWISE NOTED

AS BUILT REVISIONS

SIGNATURE DATE

SHEET 10 OF 12

ESTIMATE OF QUANTITIES

STATE OF NEW YORK
DEPARTMENT OF TRANSPORTATION

FILENAME	REGION	DATE	DRAWING NO.
305613J.1A	3	10/02	QE-4A

DESIGN SUPERVISOR ____ JOB MANAGER ____ DESIGNED BY ____ CHECKED BY ____ ESTIMATED BY ____ DRAFTED BY ____ CHECKED BY ____

FED ROAD REG. NO.	STATE	CONTRACT NO.	SHEET NO.	TOTAL SHEETS
1	N.Y.	D259214	190	432

BRIDGE REHABILITATION PROJECT (ELEMENT SPECIFIC)
VARIOUS BRIDGES ON INTERSTATE 481
TOWNS OF DEWITT AND CICERO
ONONDAGA COUNTY
P.I.N. 305613 B.I.N. VARIOUS

ESTIMATE OF QUANTITIES BY STRUCTURE

ITEM #	DESCRIPTION	UNIT	1093550		1093561		1093562		1093571		1093572		1093671		1093672	
			EST.	FINAL	EST.	FINAL	EST.	FINAL	EST.	FINAL	EST.	FINAL	EST.	FINAL	EST.	FINAL
570.090004 M	ENVIRONMENTAL GROUND PROTECTION	LS	—		—		—		—		—		—		—	
570.100001 M	ENVIRONMENTAL WATERWAY PROTECTION	LS	—		—		—		NEC		—		—		—	
570.100002 M	ENVIRONMENTAL WATERWAY PROTECTION	LS	—		—		—		—		NEC		—		—	
16570.32 M	LOCALIZED PAINTING OF BARE STRUCTURAL STEEL	SM	—		—		—		18		21		—		—	
16570.72 M	LOCALIZED VACUUM CONTAINED CLEANING OF STRUCTURAL STEEL PLANAR SURFACES	SM	—		—		—		18		21		—		—	
16570.76 M	LOCALIZED VACUUM CONTAINED CLEANING OF STRUCTURAL STEEL - IRREGUALR	SM	—		—		—		—		—		—		—	
571.010001 M	TREATMENT AND DISPOSAL OF PAINT REMOVAL WASTE	CM	—		—		—		1		—		—		—	
571.010002 M	TREATMENT AND DISPOSAL OF PAINT REMOVAL WASTE	CM	—		—		—		—		1		—		—	
571.010003 M	TREATMENT AND DISPOSAL OF PAINT REMOVAL WASTE	CM	—		—		—		—		—		—		—	
571.010004 M	TREATMENT AND DISPOSAL OF PAINT REMOVAL WASTE	CM	—		—		—		—		—		—		—	
572.010001 M	STRUCTURAL STEEL PAINT SYSTEM: SHOP APPLIED	SM	—		—		—		1		—		—		—	
572.010002 M	STRUCTURAL STEEL PAINT SYSTEM: SHOP APPLIED	SM	—		—		—		—		1		—		—	
576.2001M	DOWNSPOUT SYSTEM, DUCTILE IRON	M	—		—		—		3		4		—		—	
578.020001 M	OVERLAY CONCRETE - CLASS E	SM	—		—		—		—		—		—		—	
578.020002 M	OVERLAY CONCRETE - CLASS E	SM	—		—		—		—		—		—		—	
578.020003 M	OVERLAY CONCRETE - CLASS E	SM	—		—		—		—		—		—		—	
578.020004 M	OVERLAY CONCRETE - CLASS E	SM	—		—		—		—		77		—		—	
578.020005 M	OVERLAY CONCRETE - CLASS E	SM	—		—		12		—		—		—		—	
578.030001 M	SLAB RECONSTRUCTION CONCRETE - CLASS D OR E	SM	—		—		—		—		—		—		—	
578.030002 M	SLAB RECONSTRUCTION CONCRETE - CLASS D OR E	SM	—		—		—		—		—		—		—	
578.030003 M	SLAB RECONSTRUCTION CONCRETE - CLASS D OR E	SM	—		—		—		—		—		—		—	
578.030004 M	SLAB RECONSTRUCTION CONCRETE - CLASS D OR E	SM	—		—		—		—		77		—		—	
578.030005 M	SLAB RECONSTRUCTION CONCRETE - CLASS D OR E	SM	—		—		12		—		—		—		—	
578.030006 M	SLAB RECONSTRUCTION CONCRETE - CLASS D OR E	SM	—		—		—		—		—		—		—	
578.030007 M	SLAB RECONSTRUCTION CONCRETE - CLASS D OR E	SM	—		—		—		—		—		—		—	
579.02 M	REINFORCING BAR EXPOSURE	SM	—		—		12		—		77		—		—	
580.01 M	REMOVAL OF STRUCTURAL CONCRETE	CM	2		2		2		62		15		2		2	
582.05 M	REMOVE STRUCTURAL CONCRETE WITH CLASS A CONCRETE	CM	16		1		1		43		46		2		5	
582.07 M	REMOVE STRUCTURAL CONCRETE AND REPLACE WITH VERTICAL OVERHEAD PATCH MATERIAL	SM	—		—		—		151		221		—		—	
16584.13 M	RAPID SETTING CONCRETE FOR BRIDGE AND APPROACH SLAB REPAIRS	KG	—		—		—		—		—		—		—	
585.01 M	STRUCTURAL LIFTING OPERATIONS - TYPE A	EA	12		—		—		—		—		—		—	
585.02 M	STRUCTURAL LIFTING OPERATIONS - TYPE B	EA	—		—		—		21		25		—		—	
585.03 M	STRUCTURAL LIFTING OPERATIONS TYPE C	EA	—		—		—		35		35		—		—	
586.01 M	DRILL AND GROUT BOLTS, OR REINFORCING BARS	mm	19200		13050		16650		53700		59100		15600		15600	
17586.18M	DRILLING HOLES IN EXISITING SUBSTRUCTURE	M	—		—		—		—		—		—		—	
16586.200125 M	DRILL AND GROUT ANCHOR BOLTS AND REBAR IN CONCRETE	EA	—		—		—		—		—		—		—	
16586.200216 M	DRILL AND GROUT ANCHOR BOLTS AND REBAR IN CONCRETE	EA	—		—		—		—		—		—		—	
587.01 M	BRIDGE RAILING REMOVAL AND DISPOSAL	M	—		—		—		—		—		—		—	
589.520001 M	REMOVAL OF EXISTING STEEL	EA	—		—		—		4		—		—		—	
589.520002 M	REMOVAL OF EXISTING STEEL	EA	—		—		—		—		6		—		—	
589.520003 M	REMOVAL OF EXISTING STEEL	EA	—		—		—		—		—		—		—	
589.520004 M	REMOVAL OF EXISTING STEEL	EA	—		—		—		—		—		—		—	
589.520005 M	REMOVAL OF EXISTING STEEL	EA	—		—		—		8		—		—		—	
590.01M	VERTICAL ADJUSTMENT OF BRIDGE DRAINAGE DEVICES	EA	—		—		—		7		9		—		—	
603.6001 M	REINFORCED CONCRETE PIPE CLASS III, 300 mm	M	—		—		—		—		4		—		—	
603.7301M	REINFORCED CONCRETE PIPE END SECTION 300 mm DIAMETER	EA	—		—		—		—		3		—		—	

ALL DIMENSIONS ARE IN m UNLESS OTHERWISE NOTED

AS BUILT REVISIONS

SIGNATURE DATE

SHEET 11 OF 12

ESTIMATE OF QUANTITIES

STATE OF NEW YORK
DEPARTMENT OF TRANSPORTATION

FILENAME	REGION	DATE	DRAWING NO.
305613.L1A	3	10/02	QE-4B

DESIGN SUPERVISOR ____ JOB MANAGER ____ ESTIMATED BY ____ DESIGNED BY ____ DRAFTED BY ____ CHECKED BY ____ CHECKED BY ____

FED ROAD REG. NO.	STATE	CONTRACT NO.	SHEET NO.	TOTAL SHEETS
1	N.Y.	D259214	191	432

BRIDGE REHABILITATION PROJECT (ELEMENT SPECIFIC)
VARIOUS BRIDGES ON INTERSTATE 481
TOWNS OF DEWITT AND CICERO
ONONDAGA COUNTY
P.I.N. 305613 B.I.N. VARIOUS

ESTIMATE OF QUANTITIES BY STRUCTURE

ITEM *	DESCRIPTION	UNIT	1093550		1093561		1093562		1093571		1093572		1093671		1093672	
			EST.	FINAL	EST.	FINAL	EST.	FINAL	EST.	FINAL	EST.	FINAL	EST.	FINAL	EST.	FINAL
605.0901 M	UNDERDRAIN FILTER TYPE 1	CM	—		—		—		—		—		—		—	
605.1702 M	OPT. UNDERDRAIN PIPE 150 mm ø	M	—		—		—		—		—		—		—	
606.73 M	REMOVE AND DISPOSE OF BOX BEAM GUIDE RAIL	M	—		—		—		—		—		—		—	
606.8701 M	CORRUGATED BEAM GUIDE RAILING TRANSITION ASSEMBLY, TWO RAIL, STEEL BRIDGE RAILING	EA	—		—		—		2		2		—		—	
16606.80 M	TRANSITION BRIDGE RAILING TO BOX BEAM GUIDE RAIL	M	—		—		—		—		—		—		—	
609.15 M	RESETTING EXISTING CURB	M	—		—		—		—		—		—		—	
610.0203 M	ESTABLISH TURF	SM	—		—		—		100		200		—		—	
612.0205 M	CLASS II TYPE B EROSION CONTROL MATERIAL	SM	—		—		—		100		150		—		—	
08615.0402 M	TREE AND VEGETATION BARRIER	M	—		—		—		150		150		—		—	
620.03 M	STONE FILLING (LIGHT)	CM	—		—		—		6		8		—		—	
625.01 M	SURVEY AND STAKEOUT	LS	—		—		—		—		—		—		—	
637.03 M	CONCRETE CYLINDER CURING BOX	EA	—		—		—		—		—		—		—	
637.0702 M	ENGINEER'S OFFICE TYPE C	MNTH	—		—		—		—		—		—		—	
10637.2101 M	FURN PORTABLE CELLULAR TELEPHONE EQUIP.	LS	—		—		—		—		—		—		—	
08637.3501 M	MICRO COMPUTER SYSTEM	EA	—		—		—		—		—		—		—	
15637.61 M	CPM SCHEDULE	LS	—		—		—		—		—		—		—	
15637.51 M	DIGITAL CAMERA SYSTEM	LS	—		—		—		—		—		—		—	
15637.91 M	CHAMPS MANAGEMENT SYSTEM	LS	—		—		—		—		—		—		—	
15637.98 M	PARTNERING WORKSHOP	LS	—		—		—		—		—		—		—	
640.10 M	WHITE PAINT REFLEC PAVEMENT STRIPES-0.38 mm	M	12		8		9		8		8		9		9	
640.11 M	YELLOW PAINT REFLEC PAVEMENT STRIPES-0.38 mm	M	9		4		6		6		6		6		6	
14646.10 M	MILLED IN AUDIBLE ROWAY DELINS (WIARD)	M	—		—		—		—		—		—		—	
23675.15M	FURNISH AND PLACE STONE BALLAST SURFACING COURSE	MT	—		—		—		—		2		—		—	
91685.0705 M	WHT POLYESTER REFLEC PAVEMENT STRIPE	M	12		8		9		8		8		9		9	
91685.0706 M	YEL POLYESTER REFLEC PAVEMENT STRIPE	M	9		4		6		6		6		6		6	
697.02 M	FIELD CHANGE ORDER	LS	—		—		—						—		—	
699.040001 M	MOBILIZATION	LS	NEC		NEC		NEC		NEC		NEC		NEC		NEC	

STANDARD SYMBOL (PLANS)	ITEM PAYMENT UNIT: ESTIMATE OF QUANTITIES SHEET	EQUIVALENT NOMENCLATURE: SPEC BOOK/PROPOSAL
m	M	METER
m^2	SQM	SQUARE METER
m^3	CM	CUBIC METER
km	KM	KILOMETER
ha	HA	HECTARE
kg	KG	KILOGRAM
t OR Mg*	MT	METRIC TON
L	L	LITER

* THE METRIC TON IS EQUIVALENT TO ONE MEGAGRAM (Mg)

ALL DIMENSIONS ARE IN m UNLESS OTHERWISE NOTED

AS BUILT REVISIONS

SIGNATURE DATE

SHEET 12 OF 12

ESTIMATE OF QUANTITIES

STATE OF NEW YORK
DEPARTMENT OF TRANSPORTATION

FILENAME	REGION	DATE	DRAWING NO.
305613L1A	3	10/02	QE-4C

DESIGN SUPERVISOR ____ JOB MANAGER ____ DESIGNED BY ____ CHECKED BY ____ ESTIMATED BY ____ DRAFTED BY ____ CHECKED BY ____

FED ROAD REG. NO.	STATE	CONTRACT NO.	SHEET NO.	TOTAL SHEETS
1	N.Y.	D259214	280	432

BRIDGE REHABILITATION PROJECT (ELEMENT SPECIFIC)
VARIOUS BRIDGES ON INTERSTATE 481
TOWNS OF DEWITT AND CICERO
ONONDAGA COUNTY
P.I.N. 305613 | B.I.N. 1093561 & 1093562

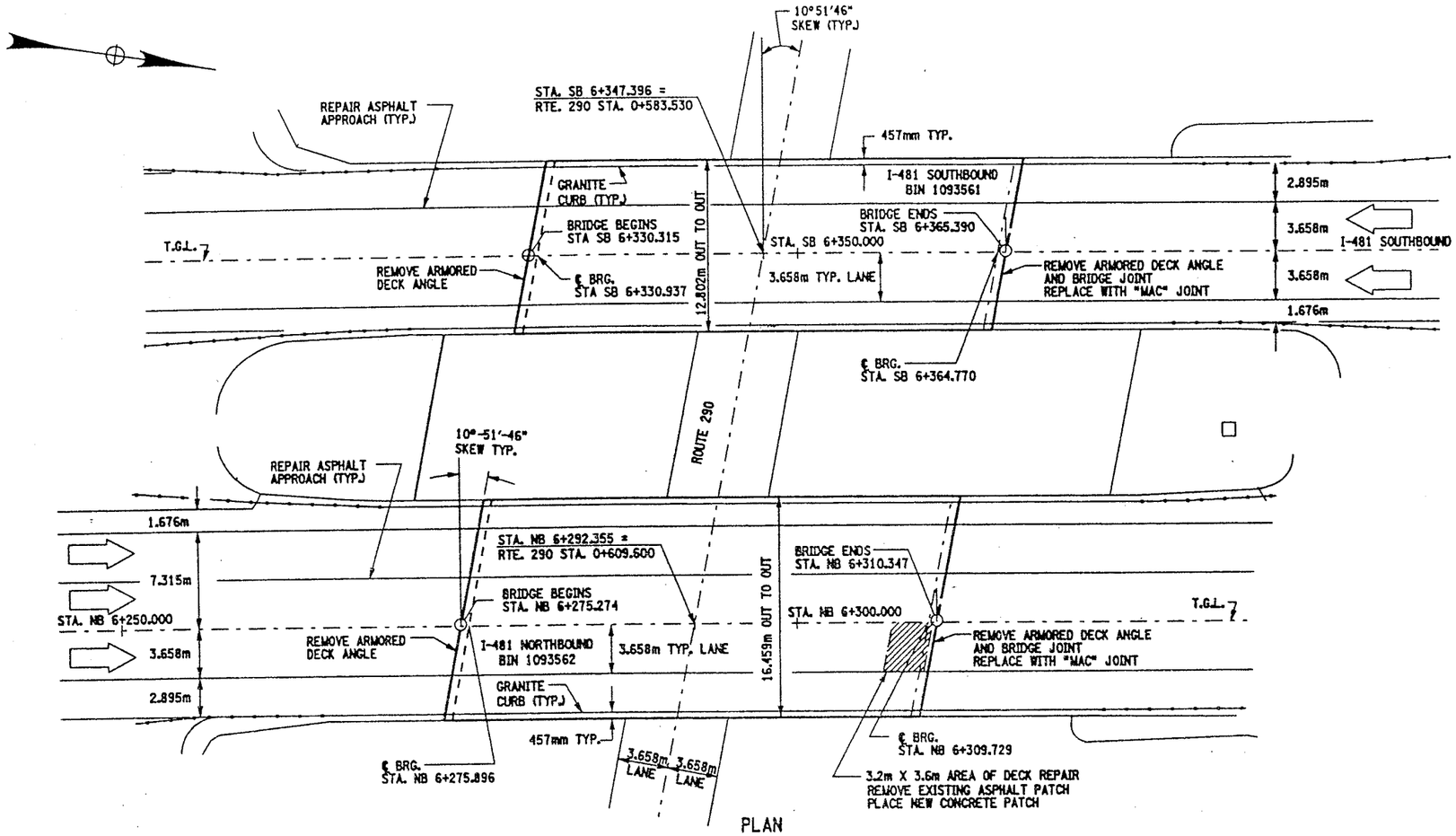

PLAN
SCALE: 1:200

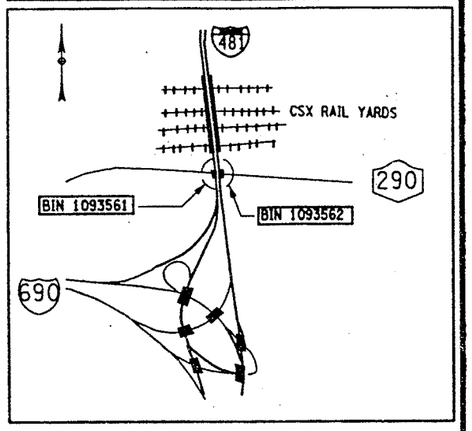

LOCATION MAP
NOT TO SCALE

WORK TO BE DONE ON BIN 1093561 (NOT NECESSARILY IN THIS ORDER)

1. ESTABLISH MP&T SCHEME FOR STAGE CONSTRUCTION.
2. REMOVE EXISTING BRIDGE JOINT, END ABUTMENT (NORTH), TO INCLUDE REMOVAL OF THE ARMORING DECK ANGLE.
3. REMOVE EXISTING ARMORING DECK ANGLE AT BEGINNING ABUTMENT, (SOUTH).
4. INSTALL PROPOSED BRIDGE JOINT AT END ABUTMENT, ("MAC" JOINT).
5. REPAIR DECK AREA AT BEGINNING ABUTMENT WHERE THE ARMORING DECK ANGLE WAS REMOVED.
6. PERFORM MINOR REPAIRS TO ASPHALT APPROACHES.
7. PERFORM MISCELLANEOUS REPAIRS TO CONCRETE ELEMENTS AT BOTH ABUTMENTS.

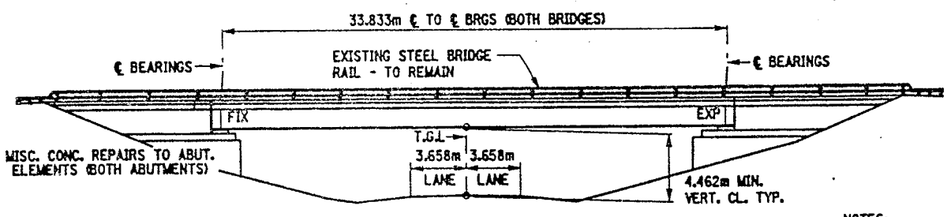

ELEVATION
SCALE: 1:200

NOTES:

SEE DWG. TS16-1 FOR WORK TO BE DONE ON BIN 1093562.

"MAC" JOINT IS A MODIFIED ARMORED JOINT SYSTEM WITH COMPRESSION SEAL.

UTILITIES BELONGING TO 'NEWCHANNEL CORP.' AND ELECTRIC UTILITIES IN VICINITY OF THESE STRUCTURES. SEE INFORMATION AVAILABLE TO BIDDERS FOR ADDITIONAL DETAILS.

BIN 1093561 SOUTHBOUND
BIN 1093562 NORTHBOUND

ALL DIMENSIONS ARE IN m UNLESS OTHERWISE NOTED

AS BUILT REVISIONS

SIGNATURE | DATE

INTERSTATE 481
OVER
ROUTE 290

PLAN, ELEVATION AND BRIDGE SECTION

STATE OF NEW YORK
DEPARTMENT OF TRANSPORTATION

FILENAME	REGION	DATE	DRAWING NO.
305613AG.G1A	3	10/02	GP16-1

DESIGN SUPERVISOR ____ JOB MANAGER ____ DESIGNED BY ____ ESTIMATED BY ____ DRAFTED BY ____ CHECKED BY ____ CHECKED BY ____

FED ROAD REG. NO.	STATE	CONTRACT NO.	SHEET NO.	TOTAL SHEETS
1	N.Y.	D259214	281	432

BRIDGE REHABILITATION PROJECT (ELEMENT SPECIFIC)
VARIOUS BRIDGES ON INTERSTATE 481
TOWNS OF DEWITT AND CICERO
ONONDAGA COUNTY
P.I.N. 305613 | B.I.N. 1093561 & 1093562

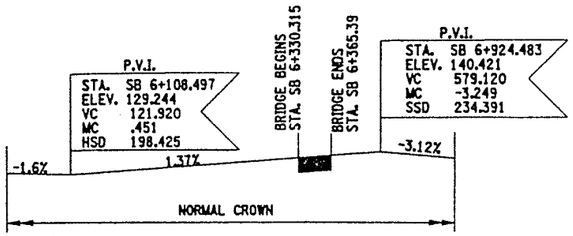

PROFILE
1093561 SB
NOT TO SCALE

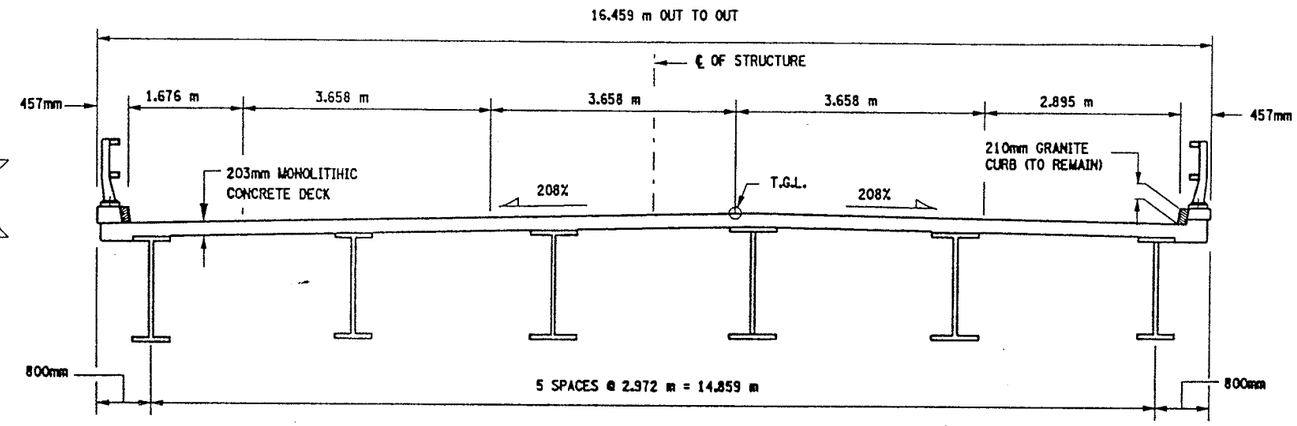

SECTION
1093562 NB
NOT TO SCALE

GENERAL NOTES:

SEE DWG. GP16-1 FOR WORK TO BE DONE ON BIN 1093561.

"MAC" JOINT IS A MODIFIED ARMORED JOINT SYSTEM WITH COMPRESSION SEAL.

UTILITIES BELONGING TO 'NEWCHANNEL CORP.' AND ELECTRIC UTILITIES IN VICINITY OF THESE STRUCTURES. SEE INFORMATION AVAILABLE TO BIDDERS FOR ADDITIONAL DETAILS.

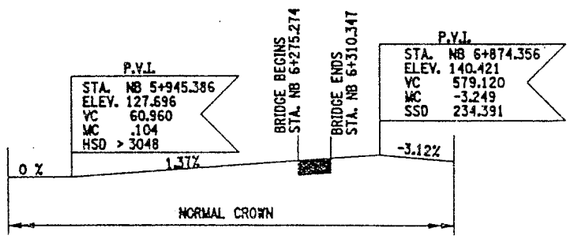

PROFILE
1093562 NB
NOT TO SCALE

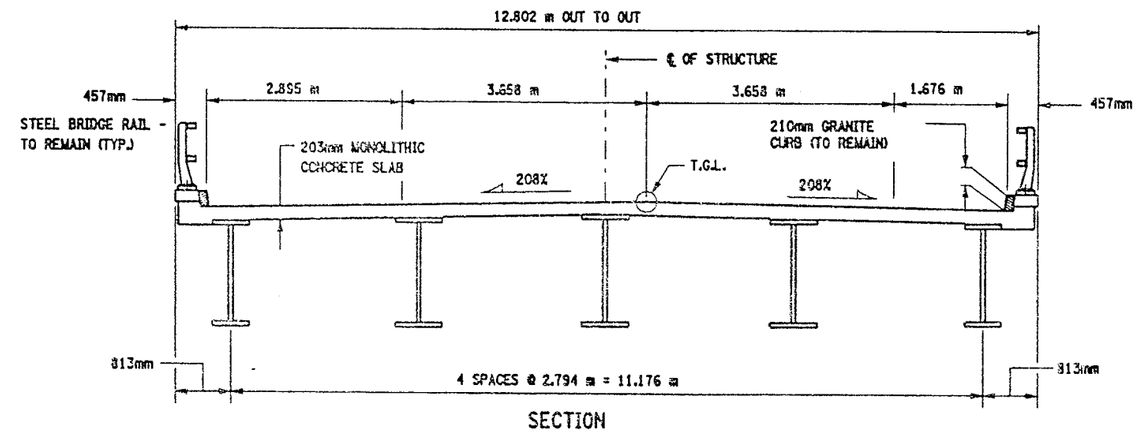

SECTION
1093561 SB
NOT TO SCALE

WORK TO BE DONE ON BIN 1093562- (NOT NECESSARILY IN THIS ORDER)

1. ESTABLISH MPAT SCHEME FOR STAGE CONSTRUCTION.
2. REMOVE EXISTING BRIDGE JOINT, END ABUTMENT (NORTH), TO INCLUDE REMOVAL OF THE ARMORING DECK ANGLE.
3. REMOVE EXISTING ARMORING DECK ANGLE AT BEGINNING ABUTMENT, (SOUTH).
4. INSTALL PROPOSED BRIDGE JOINT AT END ABUTMENT, ("MAC" JOINT).
5. REPAIR DECK AREA AT BEGINNING ABUTMENT WHERE THE ARMORING DECK ANGLE WAS REMOVED.
6. PERFORM MINOR REPAIRS TO ASPHALT APPROACHES.
7. PERFORM MISCELLANEOUS REPAIRS TO CONCRETE ELEMENTS AT BOTH ABUTMENTS.
8. REMOVE EXISTING BRIDGE DECK ASPHALT PATCH.
9. PLACE NEW CONCRETE BRIDGE DECK PATCH.

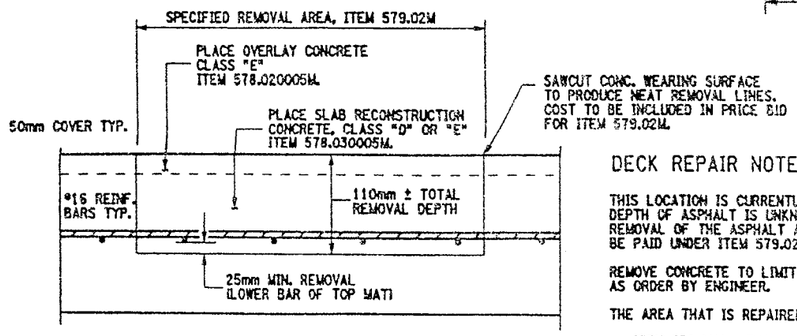

CROSS SECTION VIEW THROUGH REPAIR LOCATION

NOT TO SCALE

DECK REPAIR NOTES:

THIS LOCATION IS CURRENTLY FILLED WITH ASPHALT (BLACKTOP). DEPTH OF ASPHALT IS UNKNOWN, ESTIMATED AT @ 38mm. THE REMOVAL OF THE ASPHALT AND CONCRETE TO LIMITS SHOWN TO BE PAID UNDER ITEM 579.02M.

REMOVE CONCRETE TO LIMITS SHOWN AND TO SOUND CONCRETE AS ORDER BY ENGINEER.

THE AREA THAT IS REPAIRED SHALL ALSO RECEIVE:

ITEM 558.01M - TRANSVERSE SAWCUT GROOVING
ITEM 18559.1896M - PROTECTIVE SEALING

THE AREA SHOWN IS THE RESULT OF FIELD INVESTIGATION AND IS AN APPROXIMATE AREA. THE ACTUAL LIMITS SHALL BE AS DIRECTED BY ENGINEER.

NO FULL DEPTH SLAB REPAIR IS EXPECTED AT THIS LOCATION.

REFER TO DRAWING NO. GN-1 FOR SERIALIZED ITEM NOTES.

ITEMS USED:

ITEM 558.01M - TRANSVERSE SAWCUT GROOVING (SM)
ITEM 18559.1896M - PROTECTIVE SEALING FOR STRUCT. CONC. (SM)
ITEM 578.020005M - OVERLAY CONCRETE, CLASS "E" (SM)
ITEM 578.030005M - SLAB RECONSTRUCTION CONCRETE, CLASS "D" OR "E" (SM)
ITEM 579.02M - REINFORCING BAR EXPOSURE (SM)

ALL DIMENSIONS ARE IN m UNLESS OTHERWISE NOTED

AS BUILT REVISIONS

SIGNATURE | DATE

INTERSTATE 481
OVER
ROUTE 290

TYPICAL BRIDGE SECTION AND PROFILE

STATE OF NEW YORK
DEPARTMENT OF TRANSPORTATION

FILENAME	REGION	DATE	DRAWING NO.
305613AG.G1A	3	10/02	TS16-1

DESIGN SUPERVISOR ____ JOB MANAGER ____ DESIGNED BY ____ ESTIMATED BY ____ DRAFTED BY ____ CHECKED BY ____ CHECKED BY ____

FED ROAD REG. NO.	STATE	CONTRACT NO.	SHEET NO.	TOTAL SHEETS
1	N.Y.	D259214	283	432

BRIDGE REHABILITATION PROJECT (ELEMENT SPECIFIC)
VARIOUS BRIDGES ON INTERSTATE 481
TOWNS OF DEWITT AND CICERO
ONONDAGA COUNTY
P.I.N. 305613 B.I.N. 1093562

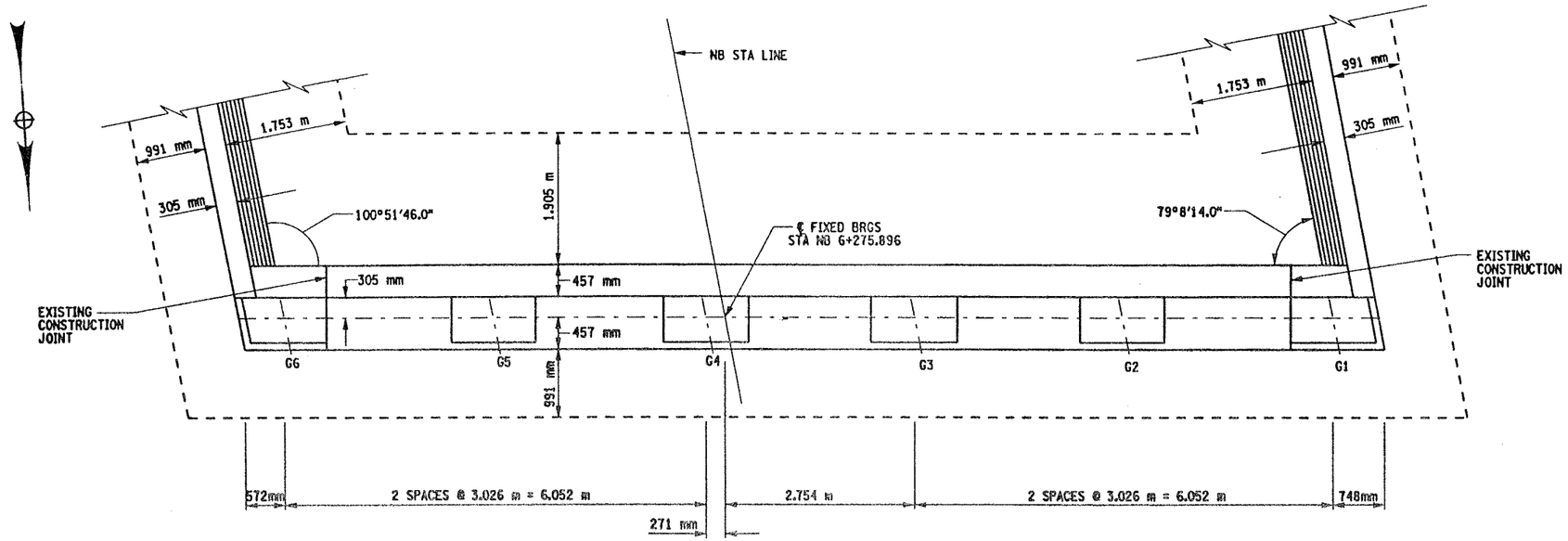

PLAN
SCALE 1:40

NOTES:

1. ALL DIMENSIONS SHOWN FOR CONCRETE REMOVAL ARE APPROXIMATE AND SHALL BE FIELD VERIFIED BY THE CONTRACTOR AND EIC.
2. REMOVE CONCRETE TO LIMITS SHOWN AS WELL AS TO SOUND CONCRETE, A.O.B.E.
3. WHEN REMOVING EXISTING CONCRETE, SAWCUT 5 mm MIN. TO PRODUCE NEAT REMOVAL LINES. ANY COST TO BE INCLUDED IN THE BID PRICE FOR ITEM 582.05M.
4. ALL EXISTING REINFORCEMENT TO REMAIN.
5. ELEVATIONS ARE GIVEN FOR QUANTITIY ESTIMATES ONLY.
6. REFER TO CONTRACT FISH 70-7 FOR ORIGINAL CONSTRUCTION DETAILS AND D251436 FOR ADDITIONAL DETAILS.

AREAS OF PROPOSED WORK: ITEM 582.05M REMOVAL OF STRUCTURAL CONCRETE-REPLACEMENT WITH CLASS A CONCRETE

NOTE: CURBS NOT SHOWN

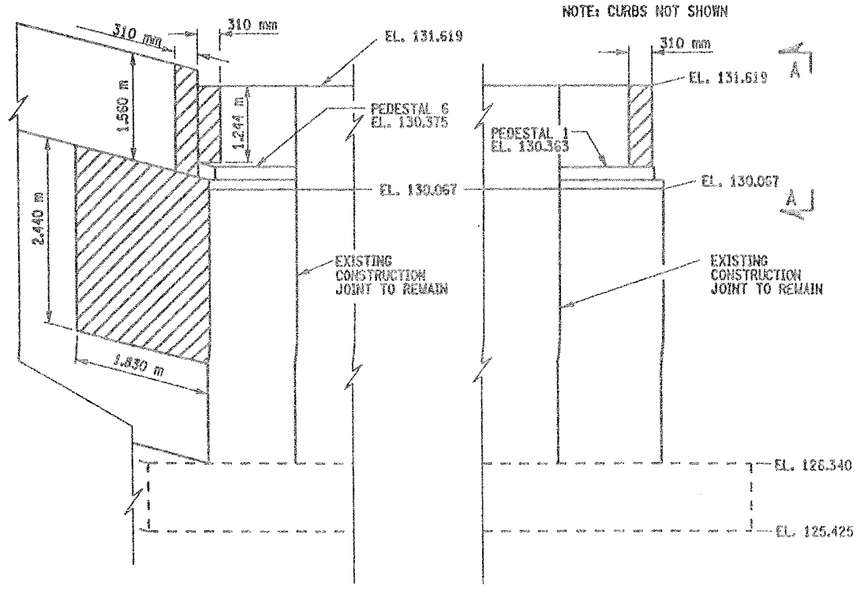

ELEVATION
SCALE 1:40

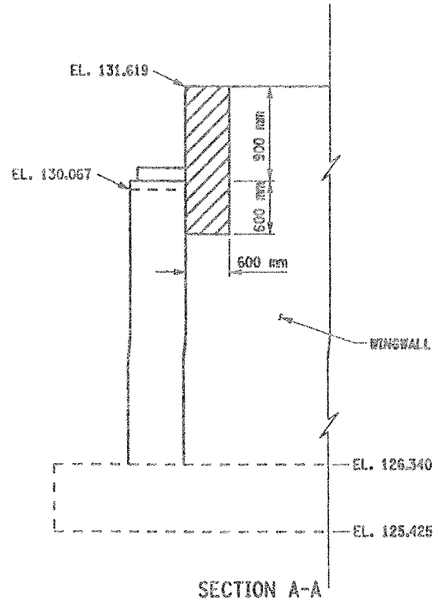

SECTION A-A
NOT TO SCALE

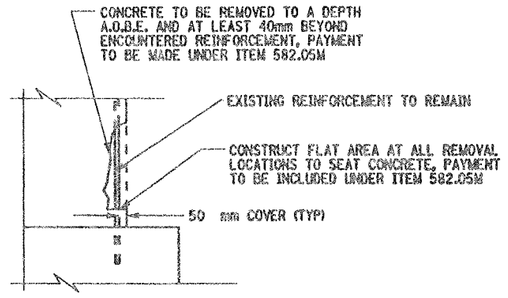

REMOVAL DETAIL
NOT TO SCALE

LIST OF ITEMS USED:

ITEM 582.05M - REMOVAL OF STRUCTURAL CONCRETE REPLACEMENT WITH CLASS A CONCRETE (CM)

ALL DIMENSIONS ARE IN m UNLESS OTHERWISE NOTED

AS BUILT REVISIONS

SIGNATURE DATE

INTERSTATE 481 NB
OVER
ROUTE 290
SOUTH ABUTMENT
PLAN AND ELEVATION

STATE OF NEW YORK
DEPARTMENT OF TRANSPORTATION

FILENAME	REGION	DATE	DRAWING NO.
305613AG.A18	3	10/02	AB16-2

DESIGN SUPERVISOR ____ CHECKED BY ____ JOB MANAGER ____ DESIGNED BY ____ ESTIMATED BY ____ DRAFTED BY ____ CHECKED BY ____

FED ROAD REG. NO.	STATE	CONTRACT NO.	SHEET NO.	TOTAL SHEETS
1	N.Y.	D259214	284	432

BRIDGE REHABILITATION PROJECT (ELEMENT SPECIFIC)
VARIOUS BRIDGES ON INTERSTATE 481
TOWNS OF DEWITT AND CICERO
ONONDAGA COUNTY
P.I.N. 305613 | B.I.N. 1093571 & 1093572

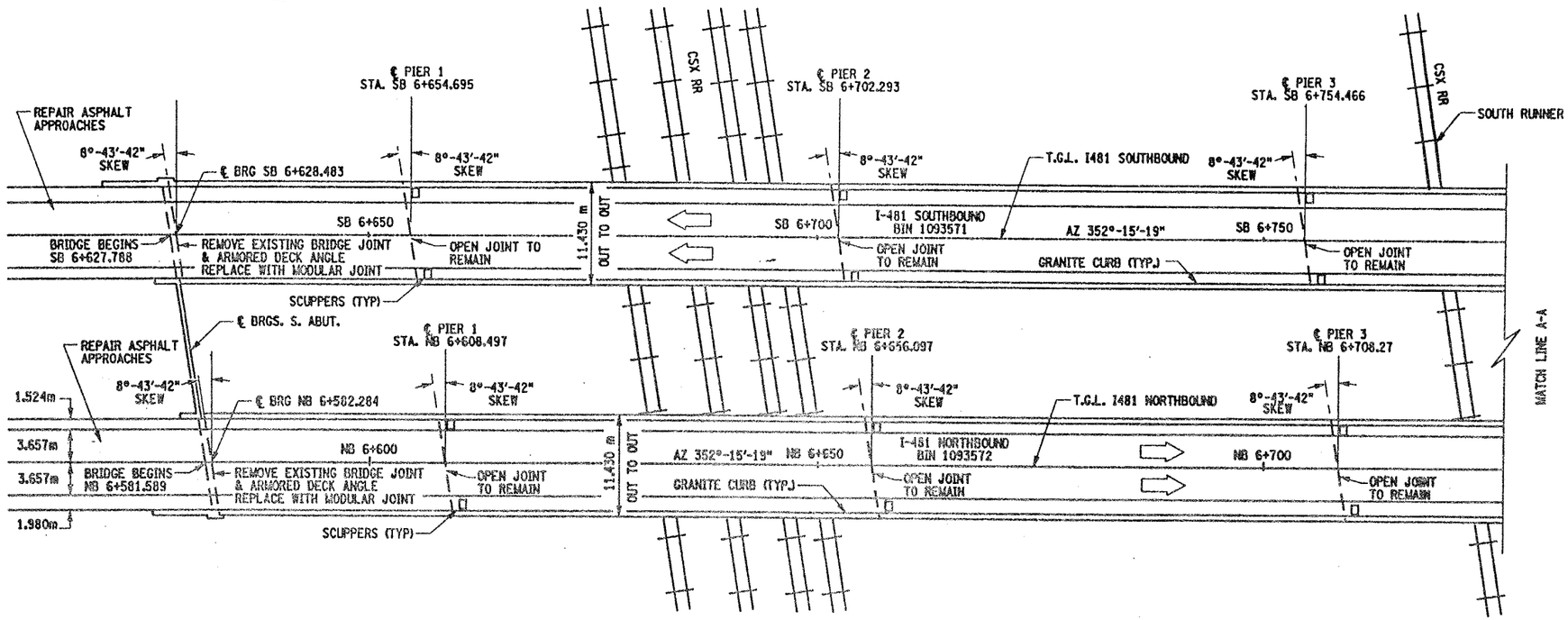

PLAN

SCALE 1:300

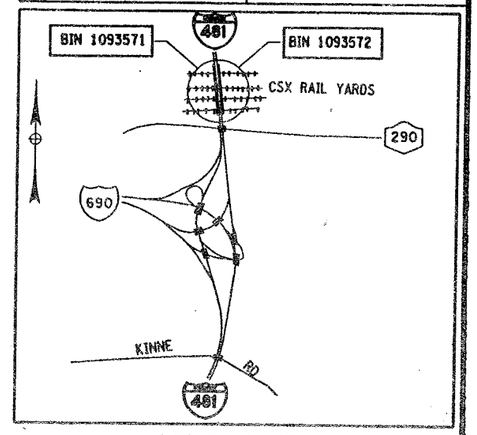

LOCATION MAP
NOT TO SCALE

NOTES:

SEE DWG. GP17-2 FOR WORK TO BE DONE ON BIN 1093571 AND DWG. GP17-3 FOR WORK TO BE DONE ON BIN 1093572.

REFER TO DWG. NO. JT-3 AND JT-4 FOR BRIDGE JOINT INFORMATION.

ELECTRIC UTILITY IN THE VICINITY OF BRIDGES. SEE INFORMATION AVAILABLE TO BIDDERS FOR ADDITIONAL INFORMATION.

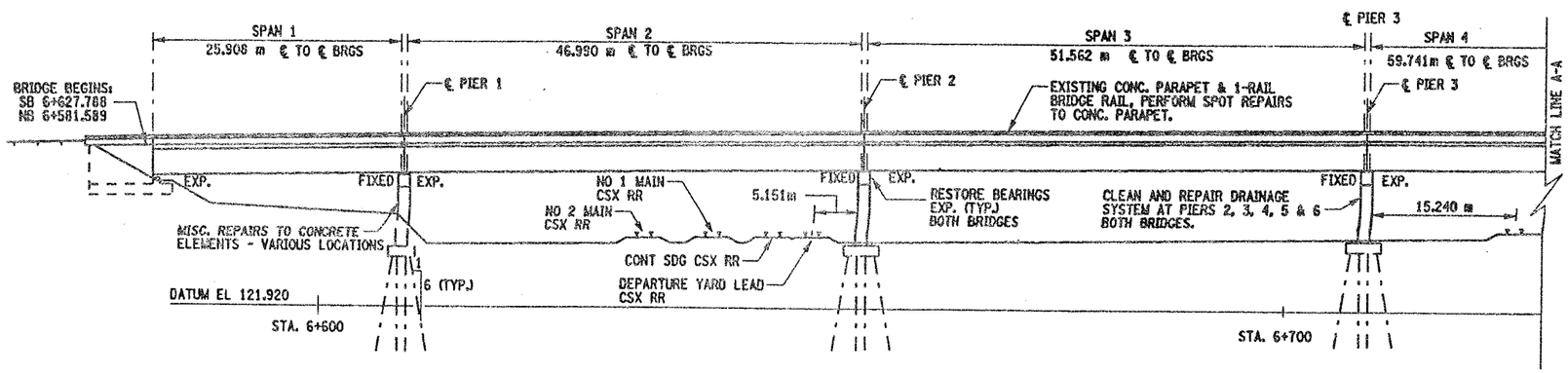

ELEVATION

SCALE 1:300

BIN 1093571 SOUTHBOUND
BIN 1093572 NORTHBOUND

ALL DIMENSIONS ARE IN m UNLESS OTHERWISE NOTED

AS BUILT REVISIONS

SIGNATURE | DATE

INTERSTATE 481
OVER
CSX RAILROAD YARD

PLAN AND ELEVATION
1 OF 4

STATE OF NEW YORK
DEPARTMENT OF TRANSPORTATION

FILENAME	REGION	DATE	DRAWING NO.
305613AE.G1A	3	10/02	GP17-1

DESIGN SUPERVISOR ____ JOB MANAGER ____ DESIGNED BY ____ CHECKED BY ____ ESTIMATED BY ____ DRAFTED BY ____ CHECKED BY ____

FED ROAD REG. NO.	STATE	CONTRACT NO.	SHEET NO.	TOTAL SHEETS
1	N.Y.	D259214	363	432

BRIDGE REHABILITATION PROJECT (ELEMENT SPECIFIC)
VARIOUS BRIDGES ON INTERSTATE 481
TOWNS OF DEWITT AND CICERO
ONONDAGA COUNTY
P.I.N. 305613 B.I.N. ALL BINS

BRIDGE JOINT TABLE

B.I.N. NUMBER	JOINT LOCATION	JOINT SKEW	SPAN(S) LENGTH FOR JOINT (METERS)	JOINT BEND LOCAT'N RT	JOINT BEND LOCAT'N LT	EXISTING JOINT TYPE	PROPOSED JOINT TYPE	CURB TO CURB DISTANCE (METERS) (SEE NOTES)	FASCIA & MEDIAN LENGTH (METERS) LT/RT	TOTAL LENGTH (METERS)	JOIINT ITEM NUMBER(S)	DRAWING NUMBER SECT VIEW	DRAWING NUMBER PLAN VIEW	DRAWING NUMBER FASCIA DETAIL
1093520	WEST ABUT.	10°-00'-00"	——	N	N	ADA	——	9.286	.464/.464	10.214	——	JD-47	——	JD-47
	EAST ABUT.	3°-00'-00"	39.014	N	N	ACJ/ADA	RCS	9.157	.458/.458	10.073	16567.64M	JD-47	——	JD-47
1093540	WEST ABUT.	3°-00'-00"	——	N	N	ACJ/ADA	RCS	9.157	.458/.458	10.073	16567.64M	JD-47	——	JD-47
	EAST ABUT.	3°-00'-00"	35.662	N	N	ADA	——	9.157	.458/.458	10.073	——	JD-47	——	JD-47
1093550	SOUTH ABUT.	51°-00'-00"	——	N	N	OPEN/ADA	RADA	18.890	.726/.726	20.342	——	JD-49	JD-48	——
	NORTH ABUT.	51°-00'-00"	45.750	N	N	ADA	RADA	18.890	.726/.726	20.342	——	JD-49	JD-48	——
1093561	SOUTH ABUT.	10°-51'-46"	——	N	N	ADA	RADA	12.104	.465/.465	13.034	——	JD-51	JD-50	JD-52
	NORTH ABUT.	10°-51'-46"	33.832	N	N	ACJ/ADA	MAC-5	12.104	.465/.465	13.034	567.35M	JD-51	JD-50	JD-52
1093562	SOUTH ABUT.	10°-51'-46"	——	N	N	ADA	RADA	15.828	.465/.465	16.758	——	JD-51	JD-50	JD-52
	NORTH ABUT.	10°-51'-46"	33.832	N	N	ACJ/ADA	MAC-5	15.828	.465/.465	16.758	567.35M	JD-51	JD-50	JD-52
1093571	SOUTH ABUT.	8°-43'-42"	26.212	N	N	ACJ/ADA	MOD-1	10.330	.616/.616	11.562	566.01M	JD-55	JD-53	JD-56
	PIER 1	8°-43'-42"	46.939	N	N	OPEN	NONE	10.330	.616/.616	11.562	——	JD-56	——	——
	PIER 2	8°-43'-42"	51.511	N	N	OPEN	NONE	10.330	.616/.616	11.562	——	JD-56	——	——
	PIER 3	8°-43'-42"	59.740	N	N	OPEN	NONE	10.330	.616/.616	11.562	——	——	——	——
	PIER 4	8°-43'-42"	59.740	N	N	OPEN	NONE	10.330	.616/.616	11.562	——	——	——	——
	PIER 5	8°-43'-42"	59.740	N	N	OPEN	NONE	10.330	.616/.616	11.562	——	——	——	——
	PIER 6	8°-43'-42"	37.490	N	N	ACJ	MOD-1	10.330	.616/.616	11.562	566.01M	JD-55	JD-54	JD-56
	PIER 7	8°-43'-42"	37.490	N	N	ACJ	MOD-1	10.330	.616/.616	11.562	566.01M	JD-55	JD-54	JD-56
	PIER 8	8°-43'-42"	37.490	N	N	ACJ	MOD-1	10.330	.616/.616	11.562	566.01M	JD-55	JD-54	JD-56
	PIER 9	8°-43'-42"	44.196	N	N	OPEN	NONE	10.330	.616/.616	11.562	——	JD-56	——	——
	PIER 10	0°-00'-00"	37.643	N	N	ACJ	MOD-1	10.210	.610/.610	11.430	566.01M	JD-55	JD-54	JD-56
	PIER 11	0°-00'-00"	37.643	N	N	ACJ	MOD-1	10.210	.610/.610	11.430	566.01M	JD-55	JD-54	JD-56
	PIER 12	0°-00'-00"	37.643	N	N	ACJ	MOD-1	10.210	.610/.610	11.430	566.01M	JD-55	JD-54	JD-56
	PIER 13	0°-00'-00"	37.643	N	N	ACJ	MOD-1	10.210	.610/.610	11.430	566.01M	JD-55	JD-54	JD-56
	PIER 14	0°-00'-00"	37.643	N	N	ACJ	MOD-1	10.210	.610/.610	11.430	566.01M	JD-55	JD-54	JD-56
	NORTH ABUT.	0°-00'-00'	——	N	N	ADA	RADA	10.210	.610/.610	11.430	——	JD-55	JD-54	——

LEGEND

EXISTING JOINT TYPE:

ACJ = ARMORED COMPRESSION JOINT SYSTEM
MOD = MODULAR JOINT SYSTEM
MAC = MODIFIED ARMORED COMPRESSION SYSTEM (NO HORIZ. ARMORING ANGLE)
ADA = ARMORED DECK ANGLE
SS = STRIP SEAL JOINT
OPEN = OPEN JOINT

PROPOSED JOINT TYPE:

MAC-1 = MOD. ARM./COMP. SEAL JT. SYS. (A-1)
MAC-2 = MOD. ARM./COMP. SEAL JT. SYS. (A-2)
MAC-5 = MOD. ARM./COMP. SEAL JT. SYS. (A-5)
MAC-6 = MOD. ARM./COMP. SEAL JT. SYS. (A-6)
RCS = REPLACE EXISTING COMPRESSION SEAL
RADA = REMOVE ARMOR DECK ANGLE
MOD-1 = MODULAR JT. SYS. (ONE-CELL)
MOD-2 = MODULAR JT. SYS. (TWO-CELL)

JOINT BEND LOCATION:

N = NO BENDS
CRB = CURB LINE
PAV'T = PAVEMENT

GENERAL NOTES:

- ALL MEASUREMENTS SHALL BE FIELD VERIFIED.
- CURB TO CURB LENGTHS ARE MEASURED ALONG ℄ OF JOINT.
- MULTIPLE DIMENSIONS ARE SHOWN LOOKING UP-STATION, LEFT TO RIGHT.
- ALL DIMENSIONS ARE SHOWN IN METERS.

INFORMATIONAL NOTES:

BIN 1093550 & 1093571

CLEAN EXISTING DRAINAGE SYSTEMS AT OPEN JOINTS (OPEN JOINTS TO REMAIN). AS SHOWN ON CONTRACT PLANS OR AS DIRECTED BY THE ENGINEER.

FOR JOINT DETAILS REFER TO THE FOLLOWING DRAWINGS;

DWG. NO. JD-1 - MODIFIED ARMORED COMPRESSION SEAL JOINT SYSTEM.
DWG. NO. JD-24 - ONE-CELL MODULAR JOINT SYSTEM.
DWG. NO. JD-25 - TWO-CELL MODULAR JOINT SYSTEM.

LIST OF BRIDGE JOINT ITEMS USED:

ITEM 566.01M - MODULAR EXP. JOINT SYSTEM ONE-CELL (M)
ITEM 566.02M - MODULAR EXP. JOINT SYSTEM TWO-CELL (M)
ITEM 567.31M - MODIFIED ARMORED JOINT SYSTEM W/ COMP. SEAL TYPE A1 (m)
ITEM 567.32M - MODIFIED ARMORED JOINT SYSTEM W/ COMP. SEAL TYPE A2 (m)
ITEM 567.35M - MODIFIED ARMORED JOINT SYSTEM W/ COMP. SEAL TYPE A5 (m)
ITEM 567.36M - MODIFIED ARMORED JOINT SYSTEM W/ COMP. SEAL TYPE A6 (m)
ITEM 16567.640001M - REPLACE COMPRESSION SEAL FOR EXISTING BRDGE JOINTS (m)
ITEM 580.01M - REMOVAL OF STRUCT. CONC. (CM)

ALL DIMENSIONS ARE IN m UNLESS OTHERWISE NOTED

AS BUILT REVISIONS

SIGNATURE DATE

INTERSTATE 481 VARIOUS BRIDGES

BRIDGE JOINT TABLE

STATE OF NEW YORK
DEPARTMENT OF TRANSPORTATION

FILENAME	REGION	DATE	DRAWING NO.
305613AJJA1	3	10/02	JT-3

DESIGN SUPERVISOR ____ JOB MANAGER ____ DESIGNED BY ____ CHECKED BY ____ ESTIMATED BY ____ DRAFTED BY ____ CHECKED BY ____

FED ROAD REG. NO.	STATE	CONTRACT NO.	SHEET NO.	TOTAL SHEETS
1	N.Y.	D259214	365	432

BRIDGE REHABILITATION PROJECT (ELEMENT SPECIFIC)
VARIOUS BRIDGES ON INTERSTATE 481
TOWNS OF DEWITT AND CICERO
ONONDAGA COUNTY
P.I.N. 305613 | B.I.N. ALL BIN'S

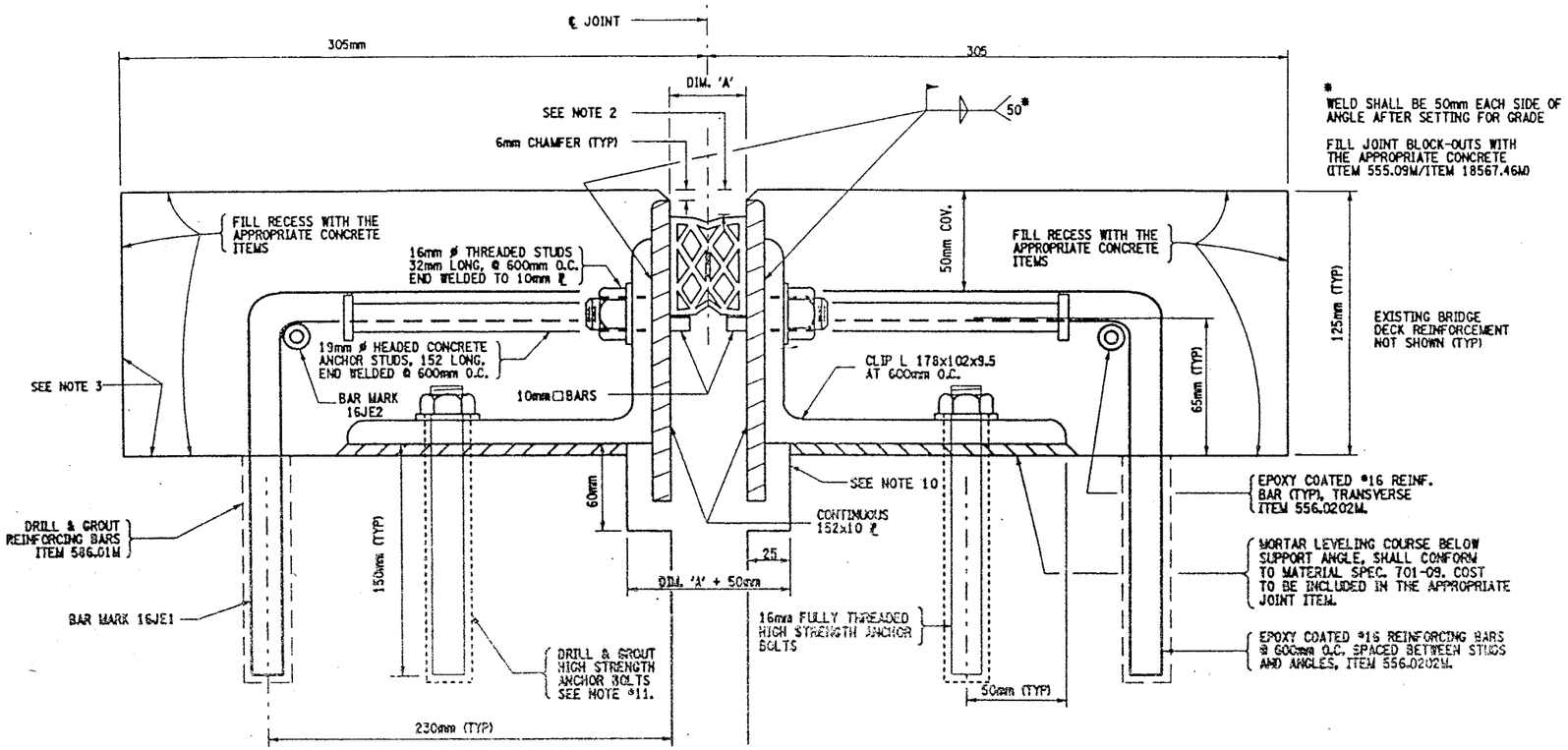

* WELD SHALL BE 50mm EACH SIDE OF ANGLE AFTER SETTING FOR GRADE

FILL JOINT BLOCK-OUTS WITH THE APPROPRIATE CONCRETE (ITEM 555.09M/ITEM 18567.46M)

MODIFIED ARMORED COMPRESSION JOINT DETAIL

FOR INSTALLATION LOCATIONS SEE JOINT TABLE

NOT TO SCALE

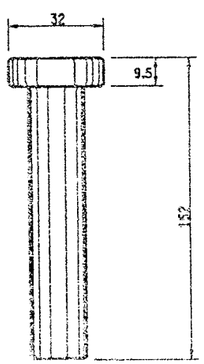

DETAIL OF HEADED CONCRETE ANCHOR STUD

NOT TO SCALE

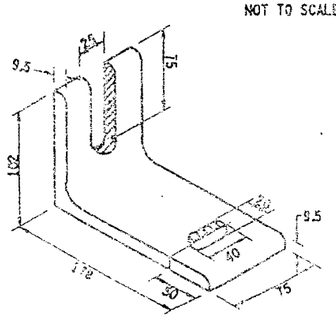

DETAIL OF CLIP ANGLE

NOT TO SCALE

NOTE:

ALL CUTTING TO BE DONE WITH A COPING SAW, SOAP AND WATER

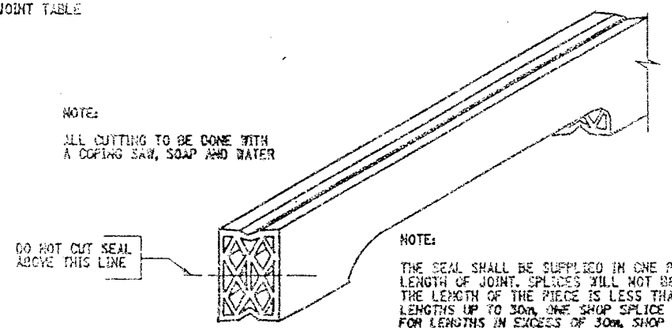

NOTE:

THE SEAL SHALL BE SUPPLIED IN ONE PIECE FOR THE FULL LENGTH OF JOINT. SPLICES WILL NOT BE PERMITTED WHEN THE LENGTH OF THE PIECE IS LESS THAN 15m. FOR LENGTHS UP TO 30m, ONE SHOP SPLICE WILL BE PERMITTED. FOR LENGTHS IN EXCESS OF 30m, SHOP SPLICES MAY BE PLACED AT APPROXIMATELY 15m INTERVALS.

DETAIL FOR CUTTING SEAL

NOT TO SCALE

GENERAL NOTES:

1. THE TEMPERATURE OF THE BRIDGE MUST BE TAKEN ON THE STRUCTURAL STEEL SURFACE TO DETERMINE THE TEMPERATURE CORRECTION FOR THE JOINT OPENINGS.
2. THIS DEPTH SHALL BE INDICATED ON THE SHOP DRAWINGS AND SHALL BE SUCH THAT WHEN THE SEAL IS COMPRESSED TO 50% OF ITS NORMAL WIDTH, THE TOP OF THE SEAL SHALL BE NOT LESS THAN 6mm NOR MORE THAN 19mm BELOW THE TOP OF THE ROADWAY.
3. RECESSES RECEIVING ITEM 555.09M. AFTER SURFACE PREPARATION, THOROUGHLY WET THE CONCRETE SURFACE AND ALL POROUS SURFACES TO BE IN CONTACT WITH NEW CONCRETE, FOR 12 HOURS. NOTE THE USE OF MATERIAL SPECIF. 705-22 PORTLAND CEMENT MORTAR BONDING GROUT HAS BEEN ELIMINATED, SEE INSERT IN PROJECT PROPOSAL.
4. A WATER-TIGHT INTEGRITY TEST SHALL BE PERFORMED BY THE CONTRACTOR AT ALL COMPRESSION SEAL JOINT INSTALLATIONS. THE FOLLOWING TEST PARAMETERS SHALL BE INCORPORATED IN THE TEST:
   1. A 15 MINUTE MINIMUM PERIOD OF STANDING WATER, WITH A 25mm MINIMUM DEPTH SHALL BE USED.
   2. IN ADDITION, IN LOCATIONS OF COPED AREAS OF THE SEAL, BENDS, ETC., WATER PRESSURE SHALL BE APPLIED, TO THE SATISFACTION OF THE EIC FOR A 15 MINUTE PERIOD.
   3. LIMITS OF TEST AREA SHALL BE FROM FACE OF CURB TO FACE OF CURB ON THE DECK SURFACE.
5. NO PAYMENT WILL BE MADE TO THE CONTRACTOR FOR THE JOINT IF, IN THE OPINION OF THE ENGINEER, THE INSTALLED JOINT LEAKS WITHIN THE 15 MINUTE TEST PERIOD.
6. PRIOR TO THE START OF WORK AT EACH JOINT, THE CONTRACTOR SHALL SUBMIT A WRITTEN PLAN FOR THE SPECIFICS OF THE TESTING, INCLUDING CONTAINMENT OF THE WATER AND THE METHOD TO BE USED FOR ACCESS BY THE E.I.C. TO THE BOTTOM OF THE JOINT BEING TESTED.
7. THE COST OF ALL LABOR, EQUIPMENT AND MATERIALS REQUIRED FOR THE TESTING WHICH INCLUDES, BUT IS NOT LIMITED TO:
   1. A CONTAINMENT SYSTEM FOR THE TEST WATER.
   2. PROVISIONS FOR E.I.C. ACCESS TO THE BOTTOM OF THE JOINT.
   SHALL BE INCLUDED IN THE PRICE BID FOR THE RESPECTIVE JOINT ITEMS.
8. THE COST OF ALL LABOR, EQUIPMENT, AND MATERIALS TO INSTALL THE NEW JOINT SHALL BE INCLUDED IN THE UNIT PRICE BID FOR THE APPROPRIATE JOINT ITEM.
9. MORTAR LEVELING COURSE SHALL CONFORM TO MATERIAL SPECIFICATION 701-09 AND SHALL BE INCLUDED IN THE PRICE BID FOR THE APPROPRIATE JOINT ITEM.
10. THE DIMENSIONS OF THE REMOVAL AREA UNDER THE 152x10 PLATES ARE SHOWN TO ALLOW SPACE FOR THE PLATES TO REST FREELY. IF THERE IS ALREADY ADEQUATE SPACE, NO CONCRETE REMOVAL OR REPLACEMENT IS REQUIRED IN THIS AREA.
11. 16 mm ø ASTM A325M ANCHOR BOLT TO BE DRILLED AND GROUTED IN PLACE IN ACCORDANCE WITH THE REQUIREMENTS OF SUB-SECTION 586-3.02. GROUTING MATERIALS SHALL BE IN ACCORDANCE WITH MATERIALS SUB-SECTION 701-07 ANCHORING MATERIALS-CHEMICALLY CURING. HOLES TO BE DRILLED TO THE DIAMETER AND DEPTH RECOMMENDED BY THE MANUFACTURER OF THE GROUTING MATERIAL (MIN. DEPTH OF 150 mm). THE COST OF THE ANCHORS, INCLUDING DRILLING AND GROUTING, SHALL BE INCLUDED IN THE UNIT PRICE BID FOR THE APPROPRIATE JOINT SYSTEM ITEM.
12. IT IS DESIRABLE TO HAVE THE ARMORED JOINT WITH ITS COMPRESSION SEAL ASSEMBLED IN THE SHOP AND DELIVERED TO THE JOB SITE ALL SET FOR INSTALLATION IN ITS PREFORMED RECESS IN THE STRUCTURAL SLAB. IN CASES WHERE THE ARMORED JOINT CANNOT BE ASSEMBLED IN THE SHOP, DUE TO ITS EXCESSIVE LENGTH CAUSING SHIPPING PROBLEMS, THE JOINT SHALL BE SEALED WITH THE COMPRESSION SEAL BEFORE THE STRUCTURE IS OPENED TO TRAFFIC INCLUDING CONSTRUCTION TRAFFIC, AND BEFORE DIS CONTINUING OPERATIONS WHEN WORK IS SUSPENDED DURING THE WINTER.

ALL DIMENSIONS ARE IN mm UNLESS OTHERWISE NOTED

EPOXY POLYSULFIDE GROUT NOTE:

CONTRACTOR MAY WITH THE APPROVAL OF THE ENGINEER USE MATERIAL SPECIFICATION 721-03 EPOXY POLYSULFIDE GROUT, AT THE RECESSES. INSTEAD OF THE 12 HOUR CONTINUOUS PREWETTING REQUIREMENTS (PROJECT PROPOSAL). CONTRACTOR MUST ENSURE PROPER CONSTRUCTION PRACTICES ARE FOLLOWED WHEN USING THIS GROUT. THE USE OF EPOXY POLYSULFIDE GROUT SHALL BE AT NO ADDITIONAL COST TO THE STATE.

SEALS (mm)			ARMORED JOINT SYSTEM	
TYPE	NOMINAL WIDTH	DIM. "A" @ 20°C.	TYPE	END CONDITION
1	44	25	A1	Fixed End Only
2	51	30	A2	Exp. up to 18 m
3	64	38	A3	Exp. over 18 m to 23 m
4	76	44	A4	Exp. over 23 m to 27 m
5	89	52	A5	Exp. over 27 m to 38 m
6	102	60	A6	Exp. over 38 m to 46 m

Maximum Skew Limits: Fixed End - No Limit
Exp. End - 45° A2 thru A6

LIST OF ITEMS USED:

ITEM 555.09M - STRUCT. CONCRETE, CLASS "HP" (CM)
ITEM 556.0202M - EPOXY COATED BAR REINF. FOR STRUCT. (kg)
ITEM 567.31M - MOD. ARMORED JOINT SYSTEM W/ COMP. SEAL TYPE A1 (m)
ITEM 567.32M - MOD. ARMORED JOINT SYSTEM W/ COMP. SEAL TYPE A2 (m)
ITEM 567.35M - MOD. ARMORED JOINT SYSTEM W/ COMP. SEAL TYPE A5 (m)
ITEM 567.36M - MOD. ARMORED JOINT SYSTEM W/ COMP. SEAL TYPE A6 (m)
ITEM 18567.46M - ELASTOMERIC CONC. FOR BRIDGE JT. SYSTEMS (M)
ITEM 586.01M - DRILL & GROUT REINF. BARS (mm)

AS BUILT REVISIONS

SIGNATURE DATE

INTERSTATE 481

COMPRESSION SEAL JOINT DETAILS

STATE OF NEW YORK
DEPARTMENT OF TRANSPORTATION

FILENAME	REGION	DATE	DRAWING NO.
305613AJJA1	3	10/02	JD-1

DESIGN SUPERVISOR ____ JOB MANAGER ____ DESIGNED BY ____ CHECKED BY ____ ESTIMATED BY ____ DRAFTED BY ____ CHECKED BY ____

FED ROAD REG. NO.	STATE	CONTRACT NO.	SHEET NO.	TOTAL SHEETS
1	N.Y.	D259214	414	432

BRIDGE REHABILITATION PROJECT (ELEMENT SPECIFIC)
VARIOUS BRIDGES ON INTERSTATE 481
TOWNS OF DEWITT AND CICERO
ONONDAGA COUNTY
P.I.N. 305613 B.I.N. 1093561 & 1093562

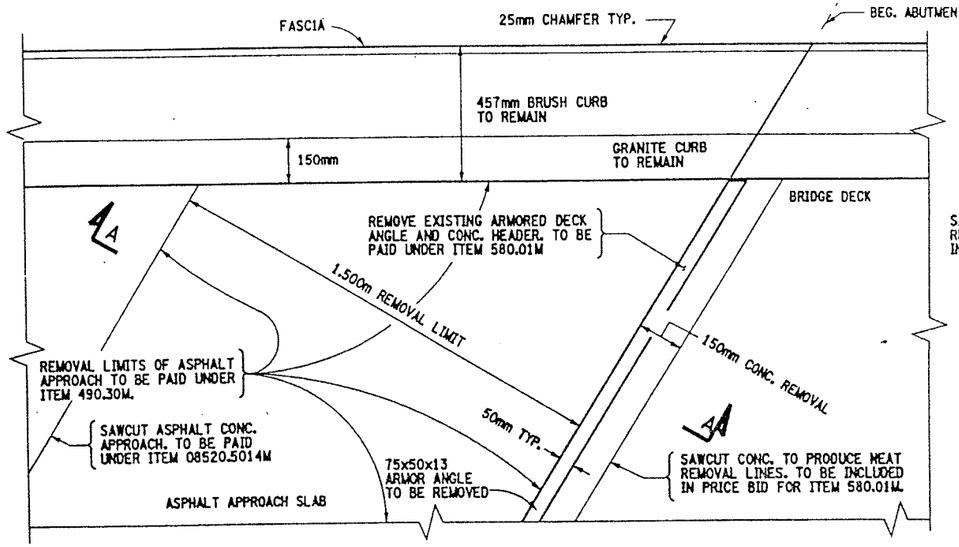

EXISTING BEG. ABUTMENT PLAN VIEW

BIN 1093561 - SOUTH ABUT.
BIN 1093562 - SOUTH ABUT.

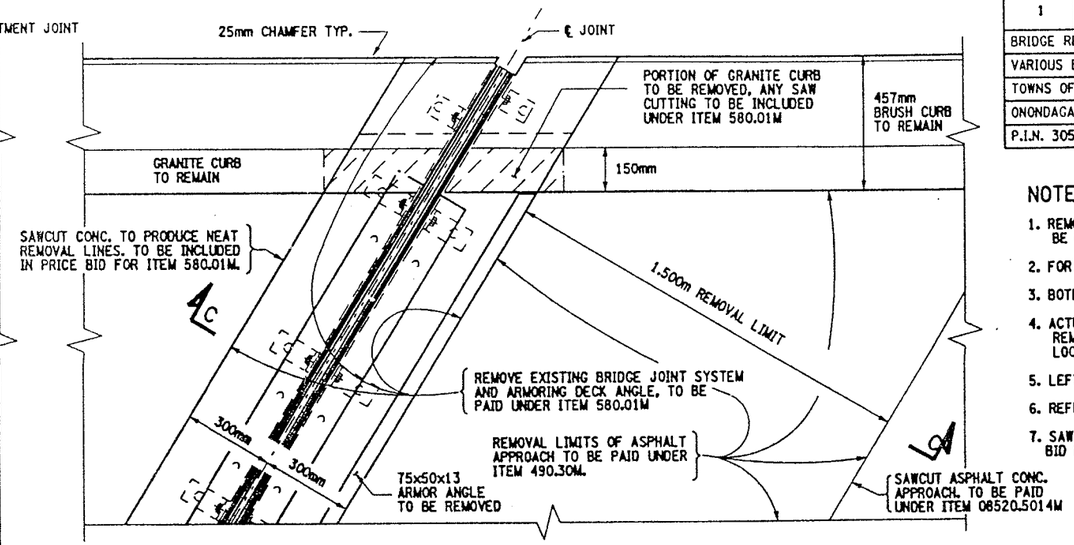

EXISTING END ABUTMENT PLAN VIEW

BIN 1093561 - NORTH ABUT.
BIN 1093562 - NORTH ABUT.

NOTES:

1. REMOVAL OF ARMORING DECK ANGLE & ANCHORAGE SHALL BE FROM CURB TO CURB.
2. FOR SECTION VIEWS SEE DWG. NO. JD-51 AND JD-52. .
3. BOTH STRUCTURES HAVE 10°-51'-46" SKEW.
4. ACTUAL BRIDGE JOINT BLOCK-OUT DIMENSIONS MAY VARY. REMOVAL LIMITS SHALL BE TO EXISTING BLOCK-OUT LOCATIONS OR AS DIRECTED BY ENGINEER.
5. LEFT SIDE OF DECK SHOWN, RIGHT SIDE IDENTICAL.
6. REFER TO DWG. NO. JT-3 FOR ADDITIONAL DETAILS.
7. SAW CUTTING OF CONCRETE SHALL BE INCLUDED IN PRICE BID FOR ITEM 580.01M.

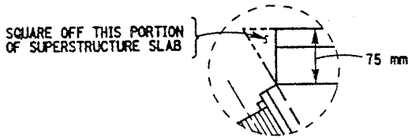

DETAIL "S"
NOT TO SCALE

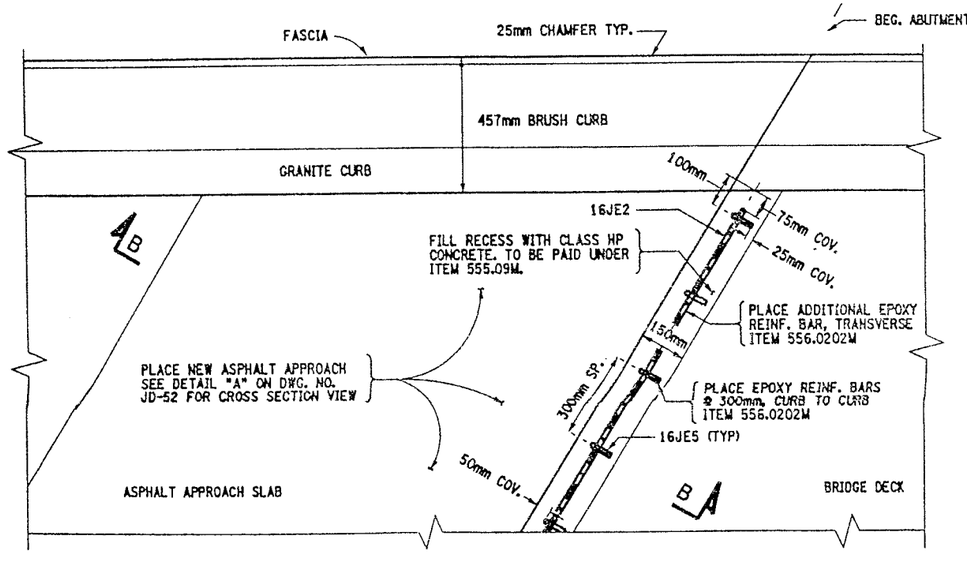

PROPOSED BEG. ABUTMENT PLAN VIEW

BIN 1093561 - SOUTH ABUT.
BIN 1093562 - SOUTH ABUT.

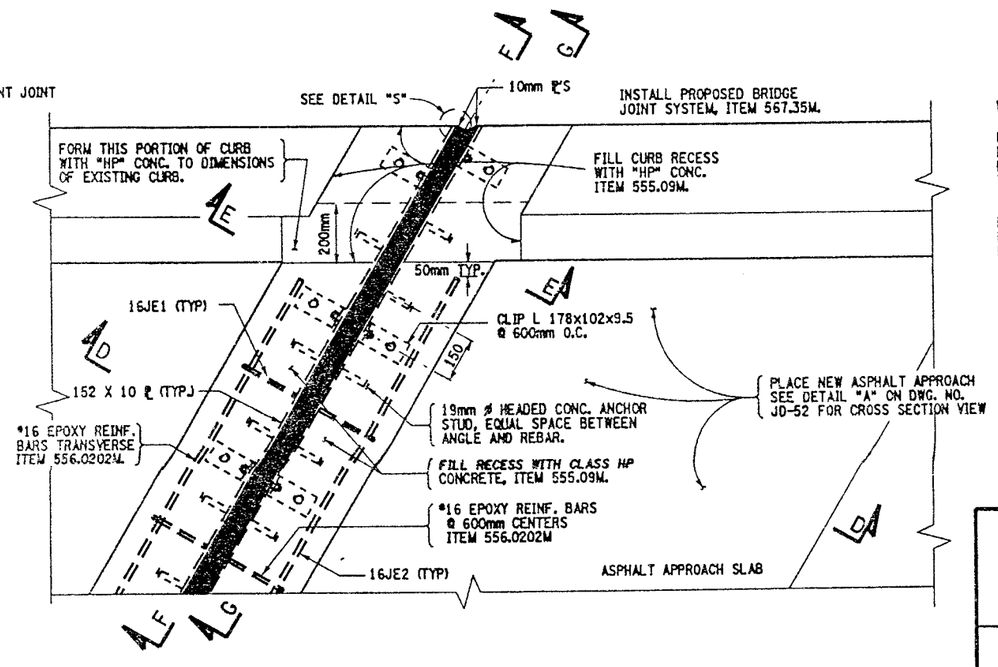

PROPOSED END ABUTMENT PLAN VIEW

BIN 1093561 - NORTH ABUT.
BIN 1093562 - NORTH ABUT.

WORK TO BE DONE:

BIN 1093561-
REMOVE ARMORING DECK ANGLE AT BEG. (SOUTH) ABUTMENT.
REPLACE THE EXISTING BRIDGE JOINT AND REMOVE THE ARMORING DECK ANGLE AT END (NORTH) ABUTMENT.

BIN 1093562 -
REMOVE ARMORING DECK ANGLE AT BEG. (SOUTH) ABUTMENT.
REPLACE THE EXISTING BRIDGE JOINT AND REMOVE THE ARMORING DECK ANGLE AT END (NORTH) ABUTMENT.

ITEMS USED:

ITEM 490.30M	- MISC. COLD MILLING OF BIT. CONC. (SM)
ITEM 08520.5014M	- SAWCUTTING BIT. CONC. (M)
ITEM 555.09M	- STRUCT. CONCRETE, CLASS "HP" (CM)
ITEM 556.0202M	- EPOXY-COATED BAR REINFORCEMENT FOR STRUCT. (Kg)
ITEM 567.35M	- MOD. ARMORED JOINT SYSTEM W/ COMP. SEAL TYPE A5 (m)
ITEM 580.01M	- REMOVAL OF STRUCT. CONCRETE (CM)

ALL DIMENSIONS ARE IN mm UNLESS OTHERWISE NOTED

AS BUILT REVISIONS

SIGNATURE DATE

INTERSTATE 481 NB & SB
OVER
ROUTE 290

BRIDGE JOINT DETAILS

STATE OF NEW YORK
DEPARTMENT OF TRANSPORTATION

FILENAME	REGION	DATE	DRAWING NO.
305613AJJA1	3	10/02	JD-50

DESIGN SUPERVISOR ____ JOB MANAGER ____ DESIGNED BY ____ ESTIMATED BY ____ CHECKED BY ____ DRAFTED BY ____ CHECKED BY ____

FED ROAD REG. NO.	STATE	CONTRACT NO.	SHEET NO.	TOTAL SHEETS
1	N.Y.	D259214	415	432

BRIDGE REHABILITATION PROJECT (ELEMENT SPECIFIC)

VARIOUS BRIDGES ON INTERSTATE 481

TOWNS OF DEWITT AND CICERO

ONONDAGA COUNTY

P.I.N. 305613 | B.I.N. 1093561 & 1093562

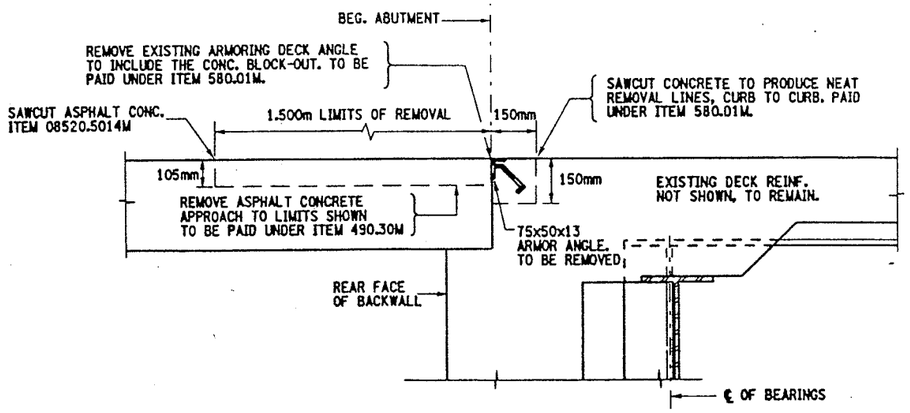

SECTION A-A
EXISTING BEG. ABUTMENT JOINT

BIN 1093561 - SOUTH ABUT.
BIN 1093562 - SOUTH ABUT.

NOT TO SCALE

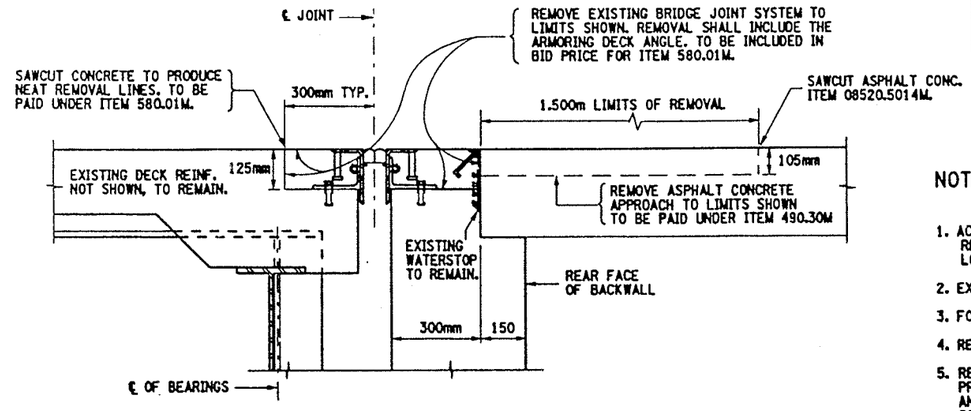

SECTION C-C
EXISTING END ABUTMENT JOINT

BIN 1093561 - NORTH ABUT.
BIN 1093562 - NORTH ABUT.

NOT TO SCALE

NOTES:

1. ACTUAL BRIDGE JOINT BLOCK-OUT DIMENSIONS MAY VARY. REMOVAL LIMITS SHALL BE TO EXISTING BLOCK-OUT LOCATIONS, AOBE.
2. EXISTING WATERSTOPS SHALL REMAIN.
3. FOR CALCULATION OF "A" DIMENSION REFER TO DWG. NO. JD-1.
4. REFER TO DWG. NO. JD-50 FOR PROPOSED PARTIAL PLAN VIEWS.
5. RECESSES RECEIVING ITEM 555.09M, AFTER SURFACE PREPARATION, THOROUGHLY WET THE CONCRETE SURFACES AND ALL POROUS SURFACES TO BE IN CONTACT WITH NEW CONCRETE FOR 12 HOURS. NOTE, THE USE OF MATERIAL SPECIF. 705-22 PORTLAND CEMENT MORTAR BONDING GROUT HAS BEEN ELIMINATED, (PROJECT PROPOSAL).
6. ALL NOTES AND DETAILS ON DWG. NO. JD-1 SHALL APPLY.

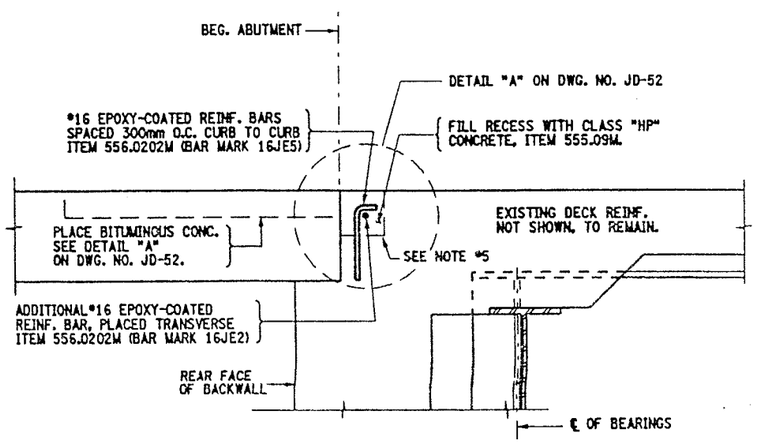

SECTION B-B
PROPOSED BEG. ABUTMENT JOINT

BIN 1093561 - SOUTH ABUT.
BIN 1093562 - SOUTH ABUT.

NOT TO SCALE

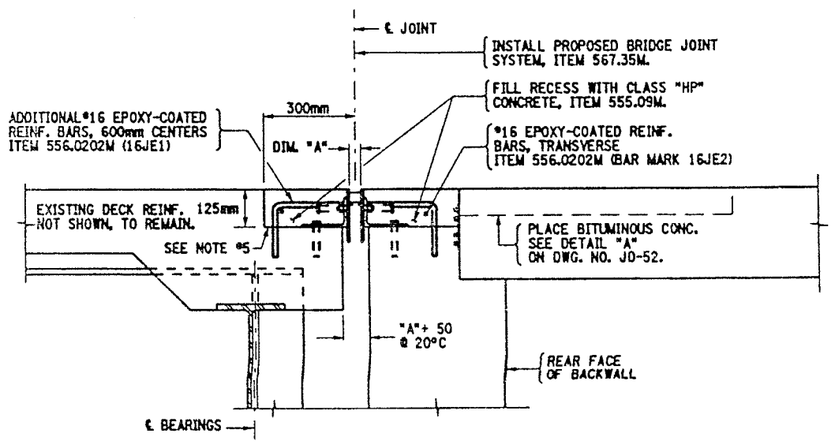

SECTION D-D
PROPOSED END ABUTMENT JOINT

BIN 1093561 - NORTH ABUT.
BIN 1093562 - NORTH ABUT.

NOT TO SCALE

ITEMS USED:

ITEM 490.30M	- MISC. COLD MILLING OF BIT. CONC. (SM)
ITEM 08520.5014M	- SAWCUTTING BIT. CONC. (M)
ITEM 555.09M	- STRUCT. CONCRETE, CLASS "HP" (CM)
ITEM 556.0202M	- EPOXY-COATED BAR REINF. FOR STRUCT.(Kg)
ITEM 567.35M	- MOD. ARMORED JOINT SYSTEM W/COMP. SEAL TYPE AS (M)
ITEM 580.01M	- REMOVAL OF STRUCT. CONCRETE (CM)

ALL DIMENSIONS ARE IN mm UNLESS OTHERWISE NOTED

AS BUILT REVISIONS

SIGNATURE DATE

INTERSTATE 481 NB & SB
OVER
ROUTE 290

BRIDGE JOINT DETAILS

STATE OF NEW YORK
DEPARTMENT OF TRANSPORTATION

FILENAME	REGION	DATE	DRAWING NO.
305613AJJA1	3	10/02	JD-51

DESIGN SUPERVISOR ____ JOB MANAGER ____ DESIGNED BY ____ ESTIMATED BY ____ DRAFTED BY ____ CHECKED BY ____ CHECKED BY ____

FED ROAD REG. NO.	STATE	CONTRACT NO.	SHEET NO.	TOTAL SHEETS
1	N.Y.	D259214	416	432

BRIDGE REHABILITATION PROJECT (ELEMENT SPECIFIC)
VARIOUS BRIDGES ON INTERSTATE 481
TOWNS OF DEWITT AND CICERO
ONONDAGA COUNTY
P.I.N. 305613 B.I.N. 1093561 & 1093562

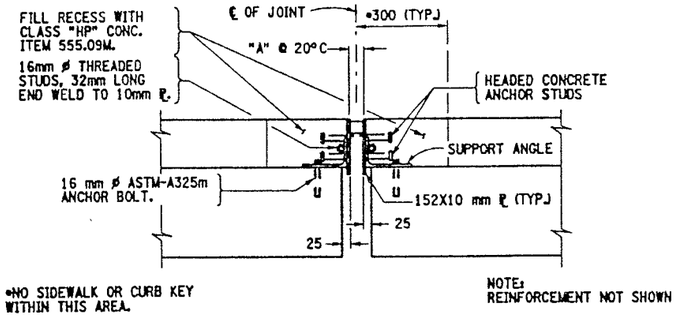

SECTION E-E
PROPOSED ABUTMENT JOINT

NOT TO SCALE

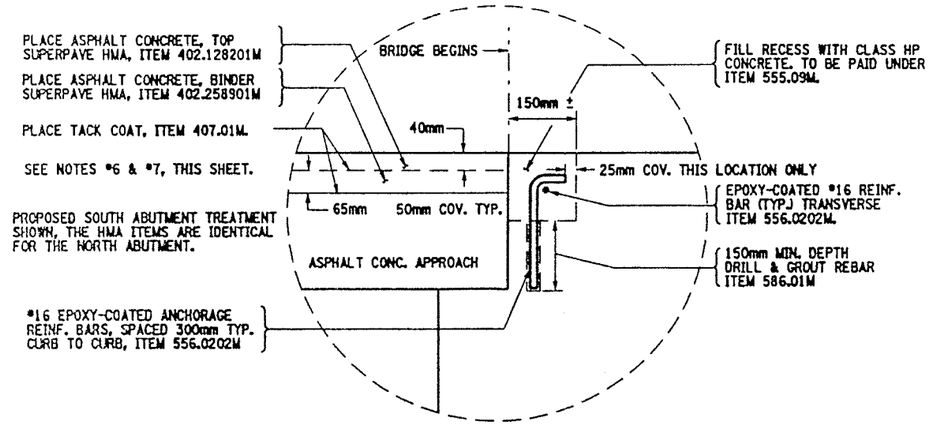

DETAIL "A"

NOT TO SCALE

NOTES:

1. ACTUAL BRIDGE JOINT BLOCK-OUT DIMENSIONS MAY VARY. REMOVAL LIMITS SHALL BE TO EXISTING BLOCK-OUT LOCATIONS, AOBE.
2. REFER TO DWG. NO. JD-50 FOR PARTIAL PLAN VIEWS.
3. ALL WELDS SHALL BE GROUND SMOOTH TO THE SATISFACTION OF THE ENGINEER, ON SEAL CONTACT SIDE OF EDGE BEAM.
4. THIS DEPTH SHALL BE INDICATED ON THE SHOP DRAWINGS AND SHALL BE SUCH THAT WHEN THE SEAL IS COMPRESSED TO 50% OF ITS NOMINAL WIDTH, THE TOP OF THE SEAL SHALL BE NOT LESS THAN 6 mm NOR MORE THAN 19 mm BELOW THE TOP OF ROADWAY.
5. RECESSES RECEIVING ITEM 555.09M, AFTER SURFACE PREPARATION, THOROUGHLY WET THE CONCRETE SURFACES AND ALL POROUS SURFACES TO BE IN CONTACT WITH NEW CONCRETE FOR 12 HOURS. NOTE, THE USE OF MATERIAL SPECIF. 705-22 PORTLAND CEMENT MORTAR BONDING GROUT HAS BEEN ELIMINATED, (PROJECT PROPOSAL).
6. ALL SURFACES OF HMA SHALL BE CLEANED AND TACK-COATED PRIOR TO HMA PLACEMENT. ALL COSTS SHALL BE INCLUDED WITHIN THE UNIT PRICE BID FOR ITEM 407.01M.
7. ANY USE OF SUPERPAVE HMA ITEMS SHALL INCLUDE THE APPROPRIATE PLANT PRODUCTION QUALITY ADJUSTMENT ITEMS.

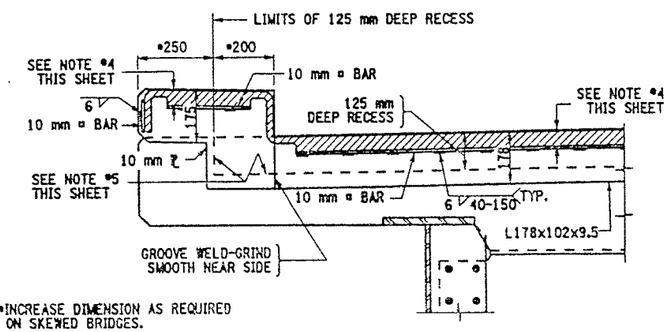

PROPOSED ABUTMENT JOINT
SECTION F-F (BRUSH CURB)

NOT TO SCALE

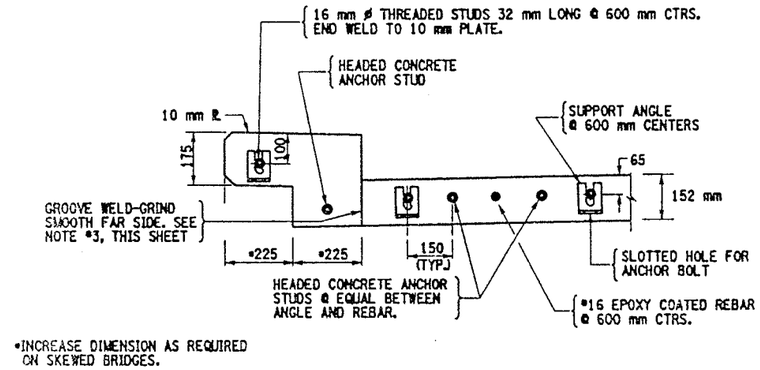

PROPOSED ABUTMENT JOINT
SECTION G-G (BRUSH CURB)

(ONLY THE STEEL SHOWN)

NOT TO SCALE

ITEMS USED:

ITEM 402.128201M	- SUPERPAVE HMA F2, 12.5mm (MT)
ITEM 402.128211M	- PLANT PRODUCTION QUALITY ADJUSTMENT TO 402.128201M (QL)
ITEM 402.258901M	- SUPERPAVE HMA F9, 25.0mm (MT)
ITEM 402.258911M	- PLANT PRODUCTION QUALITY ADJUSTMENT TO 402.258901M (QL)
ITEM 407.01M	- TACK COAT (L)
ITEM 556.0202M	- EPOXY-COATED BAR REINF. FOR STRUCT. (Kg)
ITEM 555.09M	- STRUCT. CONCRETE, CLASS "HP" (CM)
ITEM 586.01M	- DRILL & GROUT REINF. BARS (mm)

ALL DIMENSIONS ARE IN mm UNLESS OTHERWISE NOTED

AS BUILT REVISIONS

SIGNATURE DATE

INTERSTATE 481 NB & SB
OVER
ROUTE 290
BRIDGE JOINT DETAILS

STATE OF NEW YORK
DEPARTMENT OF TRANSPORTATION

FILENAME	REGION	DATE	DRAWING NO.
305613AJ.JA1	3	10/02	JD-52

DESIGN SUPERVISOR ____ JOB MANAGER ____ DESIGNED BY ____ ESTIMATED BY ____ DRAFTED BY ____ CHECKED BY ____ CHECKED BY ____

ATHENICA
ENVIRONMENTAL SERVICES INC.
Tel (718) 784-7490
Fax (718) 784-4085

3

BULK (NOB) ASBESTOS ANALYSIS BY POLARIZED LIGHT MICROSCOPY AND TRANSMISSION ELECTRON MICROSCOPY

CLIENT: NYS DOT, Region 3
LABORATORY ID #: 04-04-108
DATES OF ANALYSIS: 04/29/04

PROJECT: Bin # 1093562
ANALYT. METHODOLOGIES: ELAP 198.1, ELAP 198.4
DATE OF REPORT: 04/30/04

LABORATORY RESULTS

CLIENT #	LAB. ID #	LOCATION	%ORG	%ASI	%AII	PLM RESULTS	TYPE OF ASBEST.	TEM RESULTS	TYPE OF ASBEST.	POSIT. / NEGAT.
01	04-04-108-01	Steel paint coat G-5 flange bottom 1 meter from end bearing	24.98	11.92	63.10	**ND**	NA	**ND**	NA	**Negat.**
02	04-04-108-02	Steel paint coat G-3 web end abutment	30.62	8.44	60.94	**ND**	NA	**ND**	NA	**Negat.**
03	04-04-108-03	Steel paint coat G-2 flange bottom 3 meters from end bearing	46.15	1.28	52.56	**ND**	NA	**ND**	NA	**Negat.**

E. Sioukri

ANALYST
E. Sioukri

LABORATORY DIRECTOR
Spiro Dongaris

LABORATORY CERTIFICATION NUMBERS: NVLAP 101958, ELAP 10955

- Athenica Environmental Services Inc. (AES), is responsible only for information pertaining to samples taken by its employees.
- Samples will be stored for sixty (60) days. AES Inc., should be notified within this time frame for a true duplicate analysis.
- The report relates only to items tested. This report must not be used to claim product endorsement by NVLAP or any other agency of the U.S. Government. Test reports may not be reproduced except in full and with prior approval of AES Inc.
- The liability of Athenica Environmental Services Inc. with respect to the services charged, shall in no event exceed the amount of the invoice.

ATHENICA
ENVIRONMENTAL SERVICES INC.
45-09 GREENPOINT AVENUE
LONG ISLAND CITY, NY 11104
Tel. (718) 784-7490
Fax. (718) 784-4085

PROJECT NO. (ATHENICA FILE#) C003314

DATE 4/6/2004

METHOD OF SHIPMENT U.S. MAIL

INSPECTOR K. WAY

NUMBER OF SAMPLES 3

TYPE OF ANALYSIS REQUESTED [ ] PLM [X] NOB-PLM [X] NOB-TEM [ ] OTHERS

TURNAROUND TIME [ ] 6 HRS [ ] 12 HRS [ ] 24 HRS [X] OTHER HRS

COMMENTS ATT: CHRISTOPHER ANDERSON
333 E. WASHINGTON ST. SYRACUSE, N.Y. 13202

HOM. AREA	SAMLPLE #	SAMPLE DESCRIPTION	SAMPLE LOCATION	FIELD COMMENTS	LABORATORY RESULTS		
					PLM	PLM-NOB	TEM-NO
	01	STEEL PAINT COAT	G-5 FLANGE BOTTOM	1METER FROM END BEARING			
	02	"	G-3 WEB	END ABUTMENT.			
	03	"	G-2 FLANGE BOTTOM	3METERS FROM END BEARING			

TRANSMITTAL OF RESULTS :
[X] STANDARD
[ ] TELEPHONE RESULTS TO
[ ] FAX RESULTS TO

TELEPHONE # : (315) 428-4628
FAX # :

BATCH # : 04-04-108

CHAIN OF CUSTODY RECORD

RELINQUISHED BY :	Kent Way	DATE :	4/6/2004	TIME :	15:30
RECEIVED BY :	Reynaldo G	DATE :	4/22/2004	TIME :	
ANALYST :	EJ	DATE :	4/29/2004	TIME :	

LABORATORY ACCREDITATION :
NVLAP# 101958 ELAP# 10955

Asbestos Sampling Survey

Location:

BIN 1-09356-2
Interstate Route 481 North Bound over Route 290

Prepared for:

New York State
Department of Transportation

PIN 3804.09.101

LaBella Project No. 97132

May, 1999

Table of Contents

		Page
I.	Project Summary	1
II.	Site Description	1
III.	Inspection Procedures	1
IV.	Results	2
Certification		2
Figures and Table		

I. Project Summary

In accordance with conditions of Term Agreement D010010, LaBella Associates, P.C. conducted an asbestos sampling survey of the Interstate Route 481 North Bound bridge over Route 290. Based on laboratory analyses of bulk samples collected, the following material was determined to contain asbestos:

BIN 1-09356-2 Interstate Route 481 North Bound over Route 290

Type of Material	Estimated Amount
Sheet Packing	10.4 Square Meters

II. Site Description

The Site is located in Onondaga County, New York. For the purpose of this report, the Site consists of the Interstate Route 481 North Bound bridge over Route 290 (See attached FIGURE 1 - Site Location Map).

III. Inspection Procedures

The following procedures were used to obtain the data for this Report:

A. A review of record drawings supplied by Region 3 personnel and a visual inspection of the subject structure were conducted to identify potential visible/accessible sources of asbestos-containing materials. Observations and notes were made to provide a description of the structure, and an estimate of the approximate amount, length, or area of ACM present.

B. Physical or operational constraints which might affect the removal of the ACM were identified and reported.

C. Bulk samples of suspected ACM were collected during the site inspection of the subject structure. Samples were taken from each homogeneous area that may contain ACM.

D. Samples were submitted for analysis. Preliminary PLM analyses of NOB materials were performed by LaBella Laboratories, a NYSDOH approved laboratory, to determine the presence and percentage of asbestos in each sample. TEM analyses of NOB materials, if necessary, were performed by New York Testing Laboratories, Inc.

E. Lab results were used to determine the approximate location, type, and amount of the verified ACM.

F. A drawing of the structure at the Site was created, in order to show sample locations and the approximate locations and amounts of confirmed ACM observed in accessible locations.

Only accessible areas were inspected. Inaccessible areas, such as areas within the bridge or the approaches to the bridge were not included in this inspection. No investigation was conducted by LaBella Associates to determine the presence of underground utilities on or in the immediate vicinity of the Site. Actual sample locations are shown in the attached FIGURE 2. Results of bulk sample analyses are tabulated in the attached TABLE.

IV. Results

BIN 1-09356-2 Interstate Route 481 North Bound over Route 290

Sheet Packing

Asbestos-containing sheet packing is located between the tops of the abutments and the deck slab at both ends of the bridge. Most of this material is presently covered by the bridge deck, although the edges of this sheet packing are exposed and visible at various locations.

It is estimated that the total amount of this asbestos-containing sheet packing material on the bridge is approximately 10.4 square meters. This estimate is based on field measurements taken at the time of the site visit.

The approximate locations of this asbestos-containing sheet packing are shown in FIGURE 2.

Certification

LaBella Associates, P.C. certifies the accuracy of this report, to the best of our knowledge, based on the information collected as described in the Inspection Procedures Section of this investigation.

Figures & Table

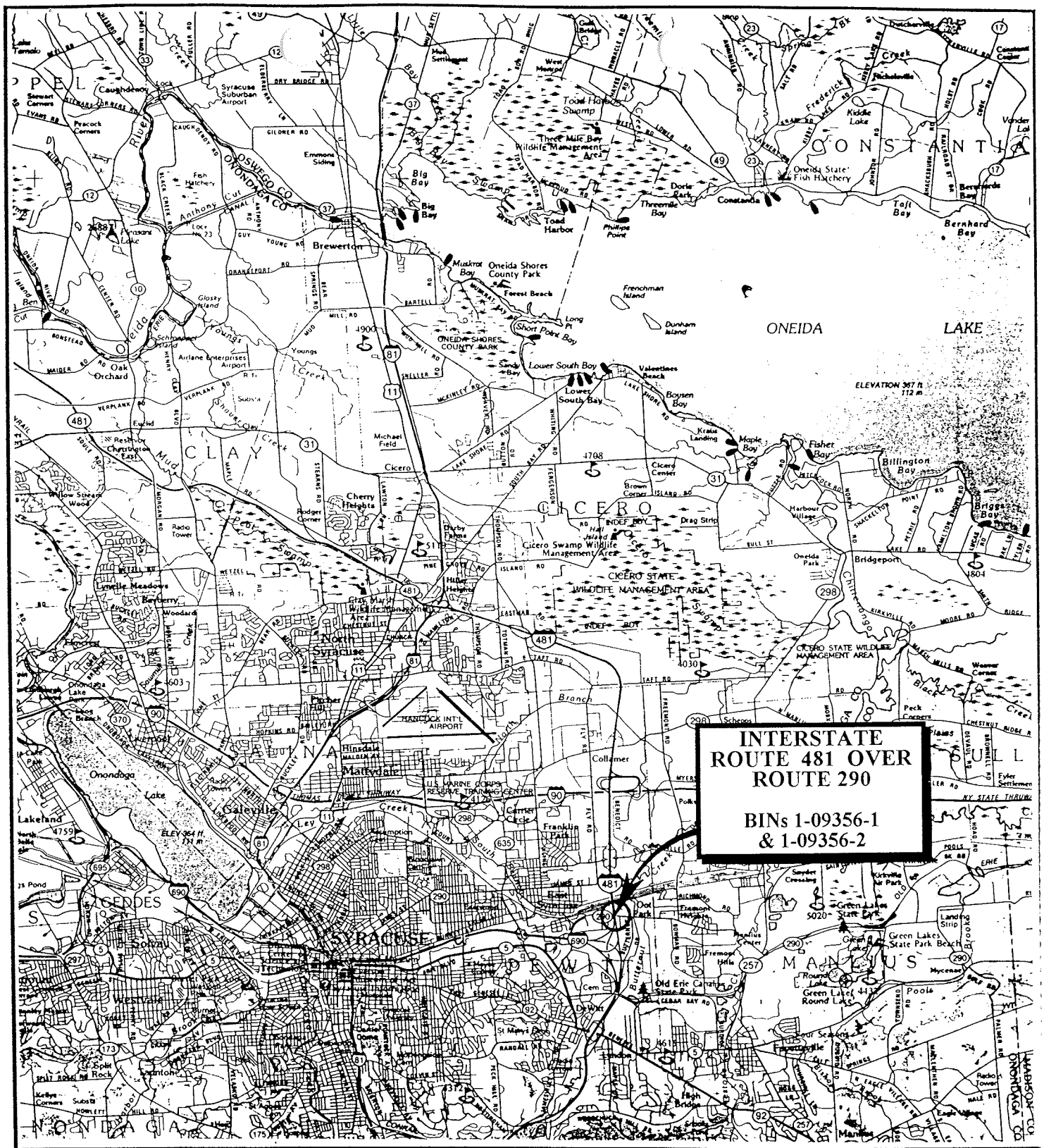

N

SCALE: 1" = 2000'

FIGURE 1
Site Location Map

Interstate Route 481
over Route 290
East Syracuse, New York

LABELLA

PROJECT NO. 97132

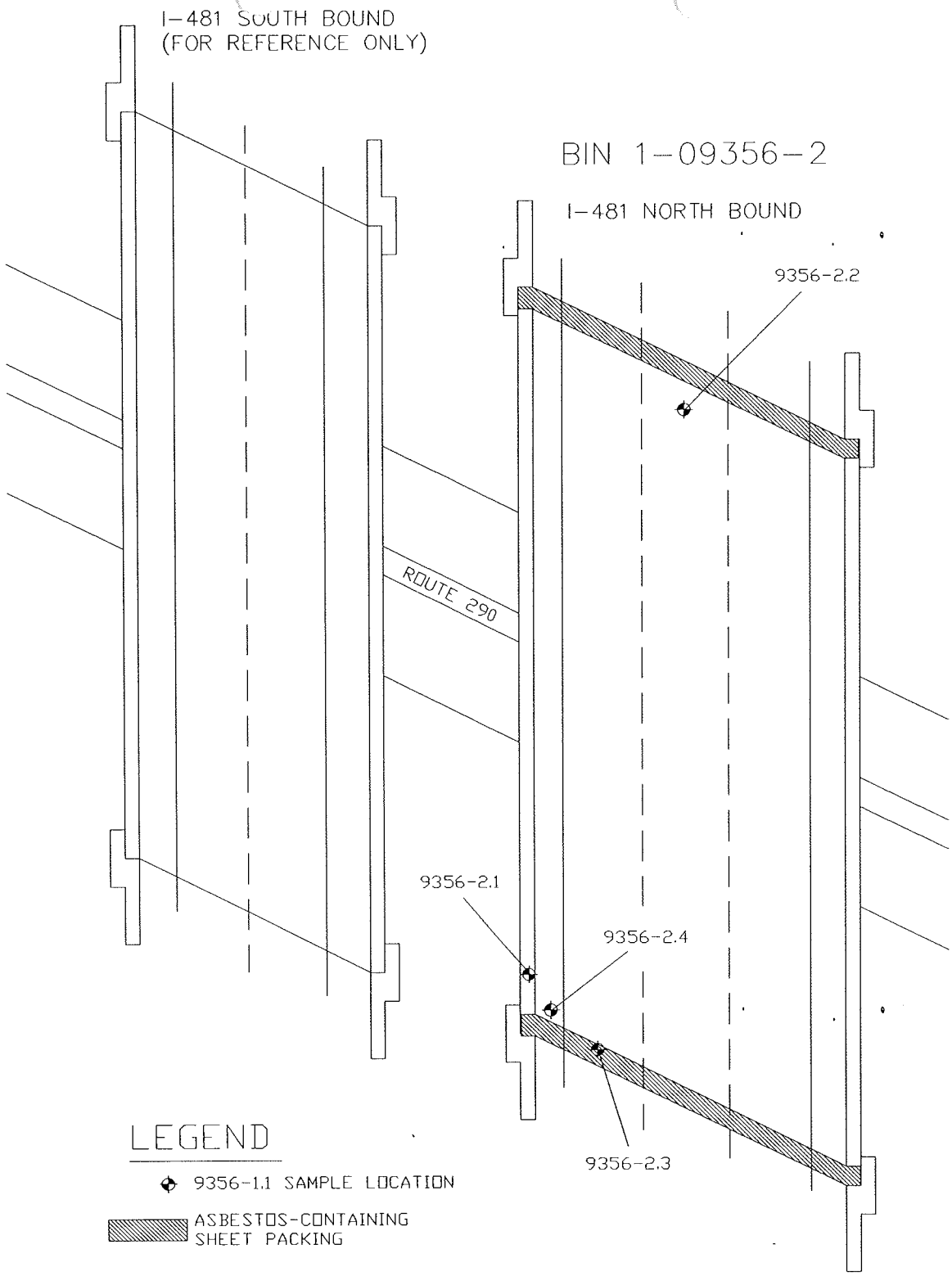

NORTH	PROJECT TITLE: ASBESTOS SAMPLING SURVEY 7 BRIDGES, ONONDAGA & OSWEGO COUNTIES, NEW YORK	PROJECT NO. 97132 PIN 3804.09.101
	FIGURE 2 : I-481 NORTH BOUND OVER ROUTE 290 BIN 1-09356-2 SAMPLE LOCATIONS AND CONFIRMED ACM	NOT TO SCALE DATE: MAY, 1999

Bulk Sample Results Table

Asbestos Sampling Survey
BIN 1-09356-2
Interstate Route 481 North Bound over Route 290
Onondaga County, New York
LaBella Project # 97132
PIN 3804.09.101

Sample #	Sample Location	Type of Material	Results % Asbestos	Amount of Material	Specification Item No.
9356-2.1	South End of Bridge, on Outside I-Beam	Green Paint	None Detected	N/A	N/A
9356-2.2	North End of Bridge, on Inside I-Beam	Green Paint	None Detected	N/A	N/A
9356-2.3	**West End of Bridge Between Deck & Abutment**	**Sheet Packing**	**37% Chrysotile**	**10.4 Square Meters**	**15202.0627 (M)**
9356-2.4	West End of Bridge on Back Wall	Gray Masonry Coating	None Detected	N/A	N/A

Watts
Architects
&Engineers

Bridge Replacement

BIN 1031720

South Bay Road over I-81

Watts

ASBESTOS & LEAD MASONRY COATING SURVEY REPORT

Location: BIN 1031720
South Bay Road Bridge over I-81
Town of Cicero, Onondaga County, New York
PIN 3806.55.101

Prepared for:
New York State Department of Transportation

Prepared By:

Lu Engineers
ENVIRONMENTAL • TRANSPORTATION • CIVIL

175 Sully's Trail, Suite 202
Corporate Crossings Office Park
Pittsford, New York 14534

December 2014

Lu Project # 9923-64

ASBESTOS & LEAD MASONRY COATING SURVEY REPORT

Location: BIN 1031720
South Bay Road Bridge over I-81
Town of Cicero, Onondaga County, New York
PIN 3806.55.101

TABLE OF CONTENTS

Page

1.0 Project Summary 1

2.0 Site Description 1

3.0 Inspection Procedures 2

4.0 Results
- 4.1 Asbestos 3
- 4.2 Lead Masonry Coating 3

Certification 3

Figures and Tables

Figure 1 Site Location Map
Figure 2 Asbestos and Lead Bulk Sample Location Plan

Table 1 Asbestos Bulk Sample Results
Table 2 Lead Masonry Coating Sample Results

Appendices

Appendix A Asbestos Survey Fact Sheet

Appendix B Licenses and Certifications

Appendix C Laboratory Analysis Reports and Chain of Custody Forms

Appendix D Previous Survey Reports

1.0 Project Summary

In accordance with conditions of Term Agreement D031070, Lu Engineers conducted an asbestos sampling survey and limited lead based masonry coating inspection on the South Bay Road Bridge over I-81 (BIN 1031720) in the Town of Cicero, Onondaga County, New York. Based on information obtained using the procedures described in Section 3.0 Inspection Procedures, the following summarizes the results of this investigation.

BIN 1031720 – South Bay Road Bridge over I-81

Confirmed Asbestos-Containing Materials (ACMs)

Based on laboratory analyses and previous reports of bulk samples collected, the following material was determined to contain asbestos:

Type of Material	Typical Location	Estimated Amount	Friability	Condition
Masonry Coating	Concrete Backwall, Cheekwall and Abutment Surfaces and Piers	9,950 SF	Non-Friable	Good
Protective Covering for Metal Surfaces	Structural Steel Members Beneath Former Open Grates	2,046 SF	Non-Friable	Good

SF = Square Feet

Inaccessible/Assumed ACMs

No inaccessible/assumed ACMs were identified.

Confirmed Lead Based Masonry Coating

Based on laboratory analyses of bulk samples collected, the masonry coating is not lead containing per EPA's definition of lead based paint.

2.0 Site Description

The site is located in the Town of Cicero, Onondaga County, New York. For the purpose of this report, the site consists of BIN 1031720 – South Bay Road Bridge over I-81. The site is indicated on the attached Figure 1 – Site Location Map.

3.0 Inspection Procedures

The following procedures were used to obtain the data for this Report:

A. A review of record drawings supplied by Region 3 personnel and a visual inspection of the subject structure were conducted to identify potential visible/accessible sources of asbestos-containing materials. Observations and notes were made to provide a description of the structure, and an estimate of the approximate amount, length, or area of ACM present.

B. Physical or operational constraints, which might affect the removal of the ACM, were identified and reported.

C. Bulk samples of suspected ACMs and lead based masonry coating were collected during the site inspection of the subject structure. Samples were taken from each homogeneous area that may contain ACM. Masonry coatings were sampled for lead. The investigation was limited to areas of the bridge that could be accessed from the bridge itself or reached from the ground and/or by use of a ladder from below. The approximate location of bulk samples is indicated on Figure 2, Asbestos and Lead Bulk Sample Location Plan.

D. Samples were submitted for analysis. Preliminary polarized light microscopy (PLM) analyses of non-friable, organically bound (NOB) materials were performed by Paradigm Environmental laboratories, a NYSDOH approved laboratory, to determine the presence and percentage of asbestos in each sample. Transmission electron microscopy (TEM) analyses of NOB materials, if necessary, were performed by Paradigm Environmental laboratories. Masonry Coating samples were submitted to Paradigm Environmental laboratories and analyzed for total lead content.

E. Lab results were used to determine the approximate location, type, and amount of the verified ACM and lead.

F. Asbestos Surveys have been conducted on this bridge previously. The following Report was reviewed as part of this survey and pertinent results were incorporated;

- Bridge Paint Asbestos Testing prepared by LaBella Associates, dated July 16, 2002.

Only accessible areas were inspected. Inaccessible areas, such as areas within the bridge or the approaches to the bridge were not included in this inspection. No investigation was conducted by Lu Engineers to determine the presence of underground utilities on or in the immediate vicinity of the Site.

4.0 Results

BIN 1031720 – South Bay Road Bridge over I-81

4.1 Confirmed Asbestos-Containing Materials (ACMs)

Masonry Coating

Asbestos-containing masonry coating is located on the concrete backwalls, cheekwalls, bearing supports, piers and abutments of the bridge.

It is estimated that the total amount of this asbestos-containing masonry coating on the bridge is approximately 9,950 square feet. The approximate locations of this asbestos-containing material are shown in Figure 2.

Protective Covering for Metal Surfaces

Asbestos-containing protective covering for metal surfaces (also commonly known as "Dum-Dum" paint) is located on some structural steel members of the bridge. This asbestos-containing paint is located on structural steel members beneath the former open grates at the east and west ends of the bridge.

It is estimated that the total amount of this asbestos-containing protective covering for steel surfaces on the bridge is approximately 2,046 square feet. The approximate locations of this asbestos-containing material are shown in Figure 2.

Inaccessible/Assumed ACMs

No inaccessible/assumed ACMs were identified.

4.2 Confirmed Lead Based Masonry Coating

Based on laboratory analyses of bulk samples collected, the masonry coating is not lead containing per EPA's definition of lead based paint.

Certification

Lu Engineers certifies the accuracy of this report, to the best of our knowledge, based on the information collected as described in the Inspection Procedures Section of this report.

Figures and Tables

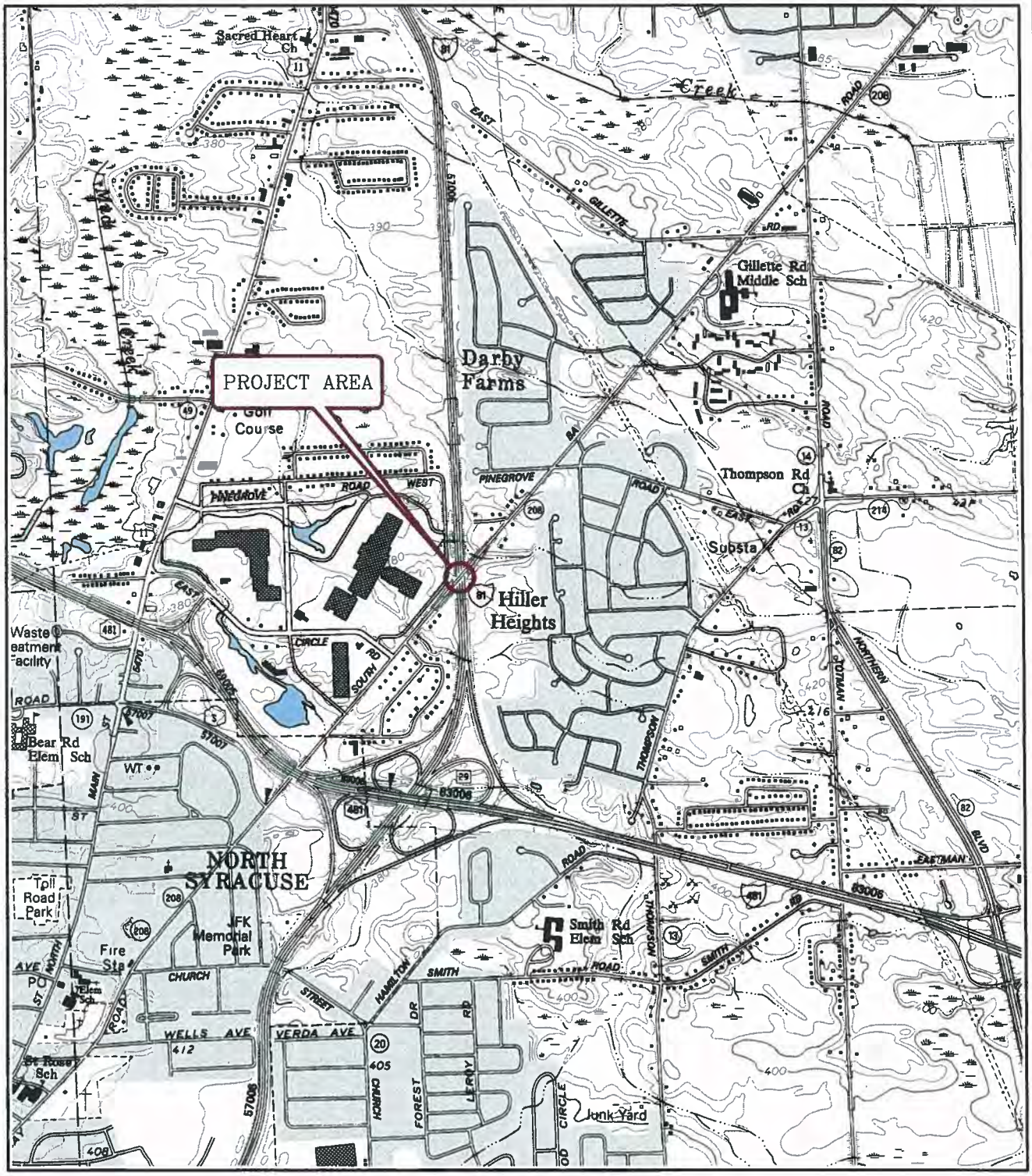

Lu Engineers
ENVIRONMENTAL • TRANSPORTATION • CIVIL

FIGURE 1. SITE LOCATION MAP

NEW YORK STATE DEPARTMENT OF TRANSPORTATION
SOUTH BAY ROAD BRIDGE OVER I-81
CICERO | ONONDAGA COUNTY | NEW YORK

PIN 3806.55.101 BIN 1031720

DATE:	NOVEMBER 2014
SCALE:	1:2,000
PROJECT NO:	9923-64

MAP SOURCE: NYS DOT RASTER QUADRANGLE; BREWERTON AND CICERO, ONONDAGA COUNTY
DOT EDITION DATE: 1997 / USGS CONTOUR DATE: 1952.

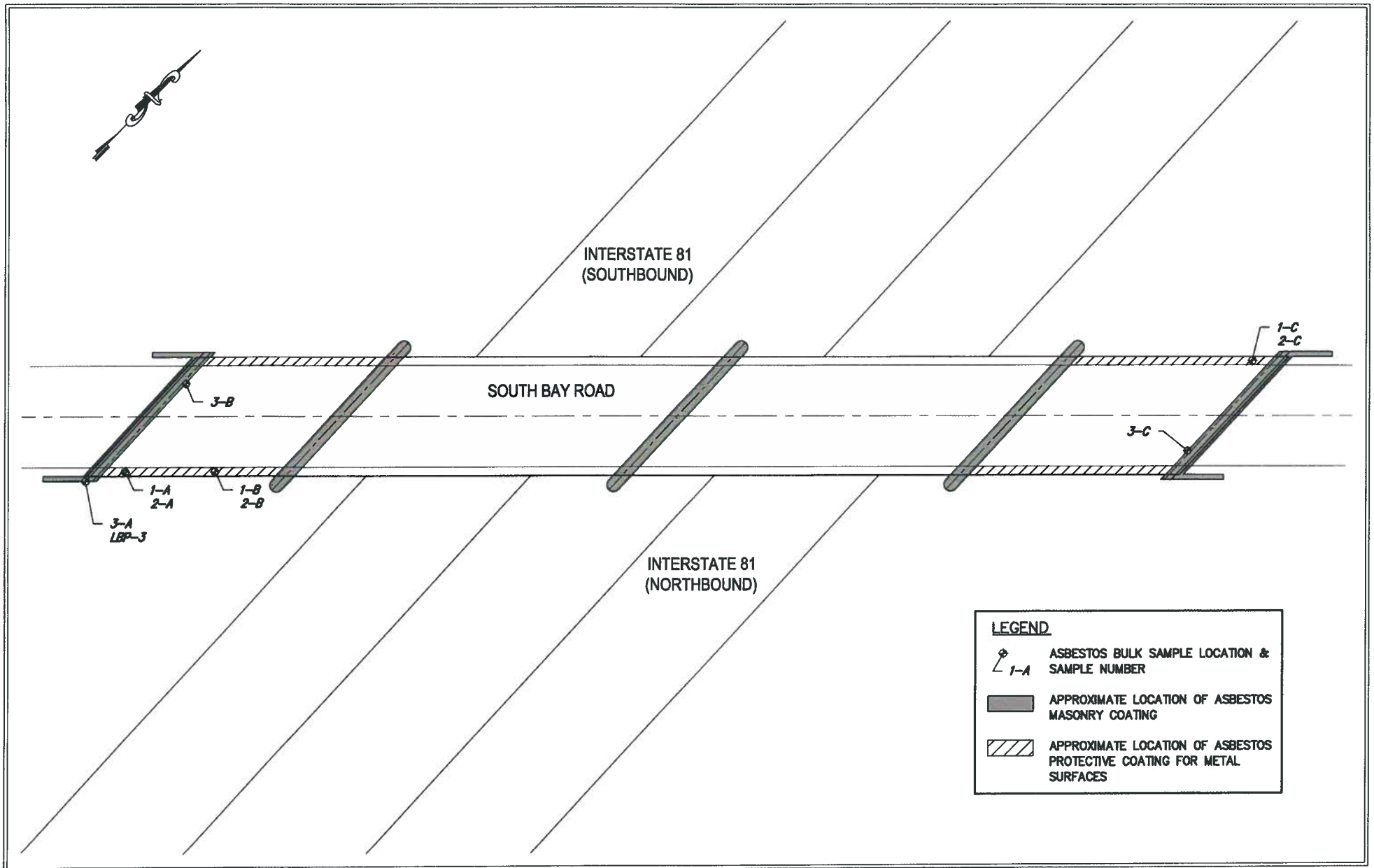

Lu Engineers
ENVIRONMENTAL • TRANSPORTATION • CIVIL

FIGURE 2.
BULK SAMPLE LOCATION PLAN

NEW YORK STATE DEPARTMENT OF TRANSPORTATION
SOUTH BAY ROAD BRIDGE OVER INTERSTATE 81
TOWN OF CICERO | ONONDAGA COUNTY | NEW YORK

DATE:	NOVEMBER 2014
SCALE:	N.T.S.
DRAWN BY:	JRM
BIN: 1031720	
PIN: 3806.55.101	
LU P.N.: 9923-64	

TABLE 1
ASBESTOS BULK SAMPLE RESULTS

SOUTH BAY ROAD BRIDGE OVER I-81
TOWN OF CICERO, ONONDAGA COUNTY, NEW YORK
BIN 1031720

Sample #	Sample Location	Type of Material	Results % Asbestos	Amount of Material	Specification Item
1-A	Southeast Corner of Bridge Under Bridge Railing Base Plate	Tan Cloth Pad	No Asbestos Detected	N.A.	N.A.
1-B	East Side of Bridge Under Bridge Railing Base Plate	Tan Cloth Pad	No Asbestos Detected	N.A.	N.A.
1-C	Northwest Corner of Bridge Under Bridge Railing Base Plate	Tan Cloth Pad	No Asbestos Detected	N.A.	N.A.
2-A	Southeast Corner of Bridge Under Bridge Railing Base Plate	White/Grey Caulk	No Asbestos Detected	N.A.	N.A.
2-B	East Side of Bridge Under Bridge Railing Base Plate	White/Grey Caulk	No Asbestos Detected	N.A.	N.A.
2-C	Northwest Corner of Bridge Under Bridge Railing Base Plate	White/Grey Caulk	No Asbestos Detected	N.A.	N.A.
3-A	**Southeast Cheek Wall**	**Grey Masonry Coating**	**3.4% Chrysotile**	**9,950 SF**	**210.4812XX**
3-B	South Back Wall	Grey Masonry Coating	No Asbestos Detected	N.A.	N.A.
3-C	**Northeast Abutment**	**Grey Masonry Coating**	**7.4% Chrysotile**	**9,950 SF**	**210.4812XX**

N.A. – Not Applicable
SF – Square Foot

TABLE 2
LEAD MASONRY COATING SAMPLE RESULTS

Sample #	Sample Location	Type of Material	Result (%)
LBP-3	Southeast Cheek Wall	Masonry Coating	0.0886

APPENDIX A

Asbestos Survey Fact Sheet

Asbestos Survey Fact Sheet

Name and Address of Building/Structure:
South Bay Road Bridge over I-81 (BIN 1031720)
Town of Cicero, Onondaga County, New York

Name and Address of Building/Structure Owner:
New York State Department of Transportation
50 Wolf Road
Albany, New York 12232

Name and Address of Owner's Agent:
Lu Engineers
175 Sully's Trail, Suite 202
Pittsford, New York 14534

Name of the Firm & Persons Conducting the Survey:
Lu Engineers
Mitchell C. Smith

Date Survey Was Conducted:
August 6, 2014

List of Homogeneous Areas
(Items in **Bold** Confirmed ACM, *italics* sampled by others)

Tan Cloth Pad under Railing
Black Sheet Packing
White / Gray Caulk
Black Tar
Green Paint (Dum-Dum)
Black Bearing Pad
Grey Masonry Coating

APPENDIX B

License and Certifications

New York State – Department of Labor
Division of Safety and Health
License and Certificate Unit
State Campus, Building 12
Albany, NY 12240

ASBESTOS HANDLING LICENSE

Joseph C. Lu Engineering And Land Surveying, P.C.
Suite 202
175 Sully's Trail

Pittsford, NY 14534

FILE NUMBER: 99-0907
LICENSE NUMBER: 29286
LICENSE CLASS: RESTRICTED
DATE OF ISSUE: 01/23/2014
EXPIRATION DATE: 01/31/2015

Duly Authorized Representative – Susan Hilton

This license has been issued in accordance with applicable provisions of Article 30 of the Labor Law of New York State and of the New York State Codes, Rules and Regulations (12 NYCRR Part 56). It is subject to suspension or revocation for a (1) serious violation of state, federal or local laws with regard to the conduct of an asbestos project, or (2) demonstrated lack of responsibility in the conduct of any job involving asbestos or asbestos material.

This license is valid only for the contractor named above and this license or a photocopy must be prominently displayed at the asbestos project worksite. This license verifies that all persons employed by the licensee on an asbestos project in New York State have been issued an Asbestos Certificate, appropriate for the type of work they perform, by the New York State Department of Labor.

Eileen M. Franko, Acting Director
For the Commissioner of Labor

SH 432 (8/12)

Mitchell C. Smith

C – Air Sampling Technician
D – Inspector
H – Project Monitor
I – Project Designer

NEW YORK STATE DEPARTMENT OF HEALTH
WADSWORTH CENTER

Expires 12:01 AM April 01, 2015
Issued April 01, 2014

CERTIFICATE OF APPROVAL FOR LABORATORY SERVICE

Issued in accordance with and pursuant to section 502 Public Health Law of New York State

MR. BRUCE HOOGESTEGER
PARADIGM ENVIRONMENTAL SERVICES INC
179 LAKE AVENUE
ROCHESTER, NY 14608

NY Lab Id No: 10958

is hereby APPROVED as an Environmental Laboratory for the category
ENVIRONMENTAL ANALYSES SOLID AND HAZARDOUS WASTE
All approved subcategories and/or analytes are listed below:

Miscellaneous

Asbestos in Friable Material	Item 198.1 of Manual
	EPA 600/M4/82/020
Asbestos in Non-Friable Material-PLM	Item 198.6 of Manual (NOB by PLM)
Asbestos in Non-Friable Material-TEM	Item 198.4 of Manual
Lead in Dust Wipes	EPA 6010C
Lead in Paint	EPA 6010C

Sample Preparation Methods

	EPA 3050B
	APP. 14.2, HUD JUNE 1995

Serial No.: 50447

Property of the New York State Department of Health. Certificates are valid only at the address shown, must be conspicuously posted, and are printed on secure paper. Continued accreditation depends on successful ongoing participation in the Program. Consumers are urged to call (518) 485-5570 to verify the laboratory's accreditation status.

APPENDIX C

Laboratory Analysis Reports and Chain of Custody Forms

PARADIGM ENVIRONMENTAL SERVICES, INC.
179 Lake Avenue, Rochester, NY 14608 Office: (585) 647-2530 Fax: (585) 647-3311

PLM & TEM BULK ASBESTOS REPORT

Client: Lu Engineers
Location: NYSDOT - PIN 3806.55.101, BIN 1031720
South Bay Road Bridge over I-81 Town of Cicero, Onondaga County, New York
Sample Date: 11/6/2014

Job No: 12246-14
Page: 1 of 2

Client ID	Lab ID	Sampling Location	Description	PLM Asbestos Fibers Type & Percentage	PLM Total Asbestos	NOB	TEM Asbestos Fibers Type & Percentage	TEM Total Asbestos	PLM Non-Asbestos Fibers Type & Percentage	Non-Fibrous Matrix Material %
1-A	82212	SE Corner of Bridge	Tan Cloth Pad	None Detected	0%		Not Required	N/A	Cellulose 60%	40%
1-B	82213	E. Side of Bridge	Black Cloth Pad	None Detected	0%		Not Required	N/A	Cellulose 60%	40%
1-C	82214	NW Corner of Bridge	Tan Cloth Pad	None Detected	0%		Not Required	N/A	Cellulose 60%	40%
2-A	82215	SE Corner of Bridge	White/Gray Caulk	Inconclusive No Asbestos Detected	0%	#	None Detected	<1.0%	None Detected	100%
2-B	82216	E. Side of Bridge	White/Gray Caulk	Inconclusive No Asbestos Detected	0%	#	None Detected	<1.0%	None Detected	100%
2-C	82217	NW Corner of Bridge	White/Gray Caulk	Inconclusive No Asbestos Detected	0%	#	None Detected	<1.0%	None Detected	100%
3-A	82218	SE Cheek Wall	Gray Fibrous Masonry Coating	Inconclusive No Asbestos Detected	0%	√	Chrysotile 3.4%	3.4%	Wollastonite 10%	86.6%
3-B	82219	S. Back Wall	Gray Fibrous Masonry Coating	Inconclusive No Asbestos Detected	0%	√	None Detected	<1.0%	Wollastonite 10%	90%
3-C	82220	NE Abutment	Gray Fibrous Masonry Coating	Inconclusive No Asbestos Detected	0%	√	Chrysotile 7.4%	7.4%	Wollastonite 10%	82.6%

NVLAP
Lab Code 200530-0
for PLM Analysis

ELAP ID No.: 10958

Ṽ This Method does not remove vermiculite and may underestimate the level of asbestos present in a sample containing greater than 10% vermiculite.

PLM Bulk Asbestos Analysis by EPA 600/M4-82-020 per 40 CFR 763 and/or EPA 600/R-93/116 (NVLAP Lab Code 2000530-0), New York State Department of Health, ELAP Method 198.1 ,198.4 and 198.6 ("Polarized Light Microscopy and Transmission Electron Microscopy Methods for Identifying and Quantitating Asbestos in Bulk Samples and in Non-Friable Organically Bound Bulk Samples.").

√ NOB (non-friable organically bound) Classified for Analytical Purposes Only.

 # denotes material analyzed by ELAP Method 198.4 and 198.6 per NYSDOH.

**** Polarized-light microscopy is not consistently reliable in detecting asbestos in floor coverings and similar non-friable organically bound materials. *Quantitative transmission electron microscopy* is currently the only method that can be used to determine if this material can be considered or treated as non-asbestos containing.**

PLM Date Analyzed: 11/14/2014
Microscope: Olympus BH-2 #233173
Analyst: *F. Weinman*

TEM Date Analyzed: 11/17/2014
TEM Analyst: F. Weinman

Laboratory Results Approved By:
Asbestos Technical Director Mary Dohr

Paradigm Environmental Services, Inc. is not responsible for the data supplied by an independent inspector. National Institute of Standards and Technology Accreditation requirements mandate that this report must not be reproduced except in full without the approval of the laboratory. This PLM report relates ONLY to the items tested. This report must not be used to claim product endorsement by NVLAP or any agency of the U.S. Government. Quality control data (including 95% confidence limits and laboratory and analysts' and precision) is available upon request.

14476 17

Lu Engineers
ENVIRONMENTAL • TRANSPORTATION • CIVIL

7 of 7 COC

Bulk Sample Chain of Custody

Project Name: NYSDOT – PIN 3806.55.101	**Lu Project #** 9923-64
Site Address: BIN 1031720 South Bay Road Bridge over I-81 Town of Cicero, Onondaga County, New York	**Laboratory Name:** Paradigm Environmental Services
Results to: Lu Engineers 175 Sullys Trail, Suite 202 Pittsford, NY 14534	**Sample Type** ☒ NYS ELAP PLM/TEM ☐ PLM Only ☐ TEM Only
	Laboratory Address: 179 Lake Avenue Rochester, New York
	Turn Around Time ☐ Immediate ☐ 12 HR ☐ 24 HR ☐ 48 HR ☒ 72 HR ☐ 5 Day
	Comments: **STOP POSITIVE ON DUPLICATE SAMPLES EXCEPT FOR PAINT!!!**
Email: sue-hilton@luengineers.com, msmith@luengineers.com	

	FIELD ID	SAMPLE LOCATION	MATERIAL	NOTES
82212	1-A	SE CORNER OF BRIDGE	Cloth pad	under base plate (8x12)
213	1-B	E SIDE OF BRIDGE	"	(x 98 ea)
214	1-C	NW CORNER OF BRIDGE	"	
215	2-A	SE CORNER OF BRIDGE	WHITE/GREY CAULK	under base plate (8x12)
216	2-B	E SIDE OF BRIDGE	"	
217	2-C	NW CORNER OF BRIDGE	"	
218	3-A	SE CHEEK WALL	MASONRY COATING	LBP-3
219	3-B	S. BACK WALL	"	
220	3-C	NE ABUTMENT	"	

Date Sampled: 11/6/14

Inspector: MITCH SMITH

Relinquished By [signature] Date/Time 11/7/14 @ 7:00

Received By Kathleen Abreu Date/Time 11-7-14

EM 11/17/14

PARADIGM
ENVIRONMENTAL SERVICES, INC.

Analytical Report For

Lu Engineers, Inc.

For Lab Project ID

145008

Referencing

PIN 3806.55.101 Region 3, 9923.64

Prepared

Monday, November 17, 2014

Any noncompliant QC parameters or other notes impacting data interpretation are flagged or documented on the final report or are noted below.

Certifies that this report has been approved by the Technical Director or Designee

179 Lake Avenue • Rochester, NY 14608 • (585) 647-2530 • Fax (585) 647-3311 • ELAP ID# 10958

This report is part of a multipage document and should only be evaluated in its entirety. The Chain of Custody provides additional sample information, including compliance with the sample condition requirements upon receipt.

PARADIGM
ENVIRONMENTAL SERVICES, INC.

Lab Project ID: 145008

Client: **Lu Engineers, Inc.**

Project Reference: PIN 3806.55.101 Region 3, 9923.64

Sample Identifier: BIN 1031720/LBP-3 Masonry Paint
Lab Sample ID: 145008-01 **Date Sampled:** 11/6/2014
Matrix: Paint **Date Received:** 11/13/2014

Lead

Analyte	Result	Units	Qualifier	Date Analyzed
Lead	**0.0886**	%		11/14/2014 18:46

Method Reference(s): EPA 6010C
EPA 3050
Preparation Date: 11/14/2014
Data File: 111414b

This report is part of a multipage document and should only be evaluated in its entirety. The Chain of Custody provides additional sample information, including compliance with the sample condition requirements upon receipt.

Report Prepared Monday, November 17, 2014

PARADIGM
ENVIRONMENTAL SERVICES, INC

Analytical Report Appendix

The reported results relate only to the samples as they have been received by the laboratory.

Each page of this document is part of a multipage report. This document may not be reproduced except in its entirety, without the prior consent of Paradigm Environmental Services, Inc.

All soil/sludge samples have been reported on a dry weight basis, unless qualified "reported as received". Other solids are reported as received.

Low level Volatiles blank reports for soil/solid matrix are based on a nominal 5 gram weight. Sample results and reporting limits are based on actual weight, which may be more or less than 5 grams.

The Chain of Custody provides additional information, including compliance with sample condition requirements upon receipt. Sample condition requirements are defined under the 2003 NELAC Standard, sections 5.5.8.3.1 and 5.5.8.3.2.

NYSDOH ELAP does not certify for all parameters. Paradigm Environmental Services or the indicated subcontracted laboratory does hold certification for all analytes where certification is offered by ELAP unless otherwise specified. Aliquots separated for certain tests, such as TCLP, are indicated on the Chain of Custody and final reports with an "A" suffix.

Data qualifiers are used, when necessary, to provide additional information about the data. This information may be communicated as a flag or as text at the bottom of the report. Please refer to the following list of analyte-specific, frequently used data flags and their meaning:

"<" = Analyzed for but not detected at or above the quantitation limit.
"E" = Result has been estimated, calibration limit exceeded.
"Z" = See case narrative.
"D" = Sample, Laboratory Control Sample, or Matrix Spike Duplicate results above Relative Percent Difference limit.
"M" = Matrix spike recoveries outside QC limits. Matrix bias indicated.
"B" = Method blank contained trace levels of analyte. Refer to included method blank report.
"J" = Result estimated between the quantitation limit and half the quantitation limit.
"L" = Laboratory Control Sample recovery outside accepted QC limits.
"P" = Concentration differs by more than 40% between the primary and secondary analytical columns.
"NC" = Not calculable. Applicable to RPD if sample or duplicate result is non-detect or estimated (see primary report for data flags). Applicable to MS if sample is greater or equal to ten times the spike added. Applicable to sample surrogates or MS if sample dilution is 10x or higher.
"" = Indicates any recoveries outside associated acceptance windows. Surrogate outliers in samples are presumed matrix effects. LCS demonstrates method compliance unless otherwise noted.*
"(1)" = Indicates data from primary column used for QC calculation.

GENERAL TERMS AND CONDITIONS
LABORATORY SERVICES

These Terms and Conditions embody the whole agreement of the parties in the absence of a signed and executed contract between the Laboratory (LAB) and Client. They shall supersede all previous communications, representations, or agreements, either verbal or written, between the parties. The LAB specifically rejects all additional, inconsistent, or conflicting terms, whether printed or otherwise set forth in any purchase order or other communication from the Client to the LAB. The invalidity or unenforceability in whole or in part of any provision, tern or condition hereof shall not affect in any way the validity or enforceability of the remainder of the Terms and Conditions. No waiver by LAB of any provision, term, or condition hereof or of any breach by or obligation of the Client hereunder shall constitute a waiver of such provision, term, or condition on any other occasion or a waiver of any other breach by or obligation of the Client. This agreement shall be administered and interpreted under the laws of the state which services are procured.

Warranty. Recognizing that the nature of many samples is unknown and that some may contain potentially hazardous components, LAB warrants only that it will perform testing services, obtain findings, and prepare reports in accordance with generally accepted analytical laboratory principles and practices at the time of performance of services. LAB makes no other warranty, express or implied.

Scope and Compensation. LAB agrees to perform the services described in the chain of custody to which these terms and conditions are attached. Unless the parties agree in writing to the contrary, the duties of LAB shall not be construed to exceed the services specifically described. LAB wi use LAB default method for all tests unless specified otherwise on the Work Order.

Payment terms are net 30 days from the date of invoice. All overdue payments are subject to an interest charge of one and one-half percent (1-1/2%) per month or a portion thereof. Client shall also be responsible for costs of collection, including payment of reasonable attorney fees if such expense is incurred. The prices, unless stated, do not include any sale, use or other taxes. Such taxes will be added to invoice prices when required.

Prices. Compensation for services performed will be based on the current Lab Analytical Fee Schedule or on quotations agreed to in writing by the parties. Turnaround time based charges are determined from the time of resolution of all work order questions. Testimony, court appearances or data compilation for legal action will be charged separately.

Limitations of Liability. In the event of any error, omission, or other professional negligence, the sole and exclusive responsibility of LAB shall be to re-perform the deficient work at its own expense and LAB shall have no other liability whatsoever. All claims shall be deemed waived unless made in writing and received by LAB within ninety (90) days following completion of services.

LAB shall have no liability, obligation, or responsibility of any kind for losses, costs, expenses, or other damages (including but not limited to any special, direct, incidental or consequential damages) with respect to LAB's services or results.

All results provided by LAB are strictly for the use of its clients and LAB is in no way responsible for the use of such results by clients or third parties. All reports should be considered in their entirety, and LAB is not responsible for the separation, detachment, or other use of any portion of these reports. Client may not assign the lab report without the written consent of the LAB.

Client covenants and agrees, at its/his/her sole expense, to indemnify, protect, defend, and save harmless the LAB from and against any and all damages, losses, liabilities, obligations, penalties, claims, litigation, demands, defenses, judgments, suits, actions, proceedings, costs, disbursements and/or expenses (including, without limitation attorneys' and experts' fees and disbursements) of any kind whatsoever which may at any time be imposed upon, incurred by or asserted or awarded against client relating to, resulting from or arising out of (a) the breach of this agreement by this client, (b) the negligence of the client in handling, delivering or disclosing any hazardous substance, (c) the violation of the Client of any applicable law, (d) non-compliance by the Client with any environmental permit or (e) a material misrepresentation in disclosing the materials to be tested.

Hazard Disclosure. Client represents and warrants that any sample delivered to LAB will be preceded or accompanied by complete written disclosure of the presence of any hazardous substances known or suspected by Client. Client further warrants that any sample containing any hazardous substance that is to be delivered to LAB will be packaged, labeled, transported, and delivered properly and in accordance with applicable laws.

Sample Handling. Prior to LAB's acceptance of any sample (or after any revocation of acceptance), the entire risk of loss or of damage to such sample remains with Client. Samples are accepted when receipt is acknowledged on chain of custody documentation. In no event will LAB have any responsibility for the action or inaction of any carrier shipping or delivering any sample to or from LAB premises.

Client authorizes LAB to proceed with the analysis of samples as received by the laboratory, recognizing that any samples not in compliance with all current DOH-ELAP-NELAP requirements for containers, preservation or holding time will be noted as such on th final report.

Disposal of hazardous waste samples is the responsibility of the Client. If the Client does not wish such samples returned, LAB may add storage and disposal fees to the final invoice. Maximum storage time for samples is 30 days after completion of analysis unless modified by applicable state or federal laws. Client will be required to give the LAB written instructions concerning disposal of these samples.

LAB reserves the absolute right, exercisable at any time, to refuse to receive delivery of, refuse to accept, or revoke acceptance of any sample, which, in the sole judgment of LAB (a) is of unsuitable volume, (b) may be or become unsuitable for or may pose a risk in handling, transport, or processing for any health, safety, environmental or other reason whether or not due to the presence in the sample of any hazardous substance, and whether or not such presence has been disclosed to LAB by Client or (c) if the condition or sample date make the sample unsuitable for analysis.

Legal Responsibility. LAB is solely responsible for performance of this contract, and no affiliated company, director, officer, employee, or agent shall have any legal responsibility hereunder, whether in contract or tort including negligence.

Assignment. LAB may assign its performance obligations under this contract to other parties, as it deems necessary. LAB shall disclose to Client any assignee (subcontractor) by ELAP ID # on the submitted final report.

Force Majeure. LAB shall have no responsibility or liability to the Client for any failure or delay in performance by LAB, which results in whole or in part from any cause or circumstance beyond the reasonable control of LAB. Such causes and circumstances shall include, but not limited to, acts of God, acts or orders of any government authority, strikes or other labor disputes, natural disasters, accidents, wars, civil disturbances, difficulties or delays in transportation, mail or delivery services, inability to obtain sufficient services or supplies from LAB's usual suppliers, or any other cause beyond LAB's reasonable control.

Law. This contract shall be continued under the laws of the State of New York without regard to its conflicts of laws provision.

1 of 2

179 Lake Avenue, Rochester, NY 14608 Office (585) 647-2530 Fax (585) 647-3311

PARADIGM

CHAIN OF CUSTODY

REPORT TO:
COMPANY: LU ENGINEERS
ADDRESS: 175 SMITH TRAIL
CITY: PITTSFORD STATE: NY ZIP: 14534
PHONE: FAX:
ATTN: MITCH SMITH
COMMENTS: MSMITH@LUENGINEERS.COM

INVOICE TO:
COMPANY: Same
ADDRESS:
CITY: STATE: ZIP:
PHONE: FAX:
ATTN:

LAB PROJECT #: 145008
CLIENT PROJECT #: 9973-64

TURNAROUND TIME: (WORKING DAYS)
1 [ ] 2 [ ] 3 [X] STD 5 [ ] OTHER [ ]

Quotation #

PROJECT NAME/SITE NAME: BID 3806.55.101 Period 3

REQUESTED ANALYSIS

	DATE	TIME	COMPOSITE	GRAB	SAMPLE LOCATION/FIELD ID	MATRIX	NUMBER OF CONTAINERS	TOTAL LEAD										REMARKS	PARADIGM LAB SAMPLE NUMBER
* 1	11/6/14			X	BID 1031770/LBP-3	P	1	X										MASONRY PAINT	01
2	11/6/14			X	BID 1021962/LBP-1	P	1	X										"	02
3	11/6/14			X	BID 1021961/LBP-X1	P	1	X										"	03
4	11/6/14			X	BID 1031640/LBP-2	P	1	X										"	04
5																			
6																			
7																			
8																			
9																			
10																			

"LAB USE ONLY BELOW THIS LINE"

Sample Condition: Per NELAC/ELAP 210/241/242/243/244

Receipt Parameter	NELAC Compliance	
Container Type:	Y [ ]	N [ ]
Comments:		
Preservation:	Y [ ]	N [ ]
Comments:		
Holding Time:	Y [ ]	N [ ]
Comments:		
Temperature:	Y [ ]	N [ ]
Comments:		

MITCHELL C. SMITH 11/6/2014
Sampled By Date/Time

Relinquished By ~~11/10/2014~~ 11/13/14 @ 15:00
Date/Time

Received By
Date/Time

Received @ Lab By 11/13/14 1709
Date/Time

Total Cost:

P.I.F.

* PARADIGM LAB HAS SAMPLE LBP-3.

2 of 2

Chain of Custody Supplement

Client: Lu

Completed by: Kyle Sworsky

Lab Project ID: 1450008

Date: 11/13/14

Sample Condition Requirements

Per NELAC/ELAP 210/241/242/243/244

Condition	NELAC compliance with the sample condition requirements upon receipt: Yes	No	N/A
Container Type	X		
Comments			
Transferred to method-compliant container			X
Headspace (<1 mL)			X
Comments			
Preservation			X
Comments			
Chlorine Absent (<0.10 ppm per test strip)			X
Comments			
Holding Time	X		
Comments			
Temperature			X
Comments			
Sufficient Sample Quantity	X		
Comments			

179 Lake Avenue • Rochester, NY 14608 • (585) 647-2530 • Fax (585) 647-3311 • ELAP ID# 10958

APPENDIX D

Previous Survey Reports

BIN 1031720
SOUTH BAY ROAD
OVER ROUTE I-81

BRIDGE PAINT ASBESTOS TESTING
BULK SAMPLE SUMMARY TABLE

NO OTHER SUSPECT MATERIALS TESTED

SAMPLE #	SAMPLE DATE	HOMOGENEOUS AREA	SAMPLE LOCATION	RESULTS- % ASBESTOS *	ANALYSIS METHOD
1031720-1	7/16/02	Green Paint	West End of Bridge on Inside of North Fascia Girder	None Detected	TEM **
1031720-2	7/16/02	Green Paint	West End of Bridge on Center Girder	None Detected	TEM **
1031720-3	7/16/02	Green Paint	East End of Bridge on Cross Girder	None Detected	TEM **
1031720-4	**7/16/02**	**Green Paint**	**East End of Bridge on Inside of North Fascia Girder Under Former Open Grate**	**14% Chrysotile**	**PLM ** **

* PLM = Polarized Light Microscopy
** TEM = Transmission Electron Microscopy

LaBella Project No. 201001
PIN 3804.79.101
1031720